SUPPLIER CATALOGUES

VALVES AND ACCESSORIES/INSTRUMENTATION
POSITIVE DISPLACEMENT BLOWER
GQB 22.23XZ

Read the instructions prior to performing any task!
Keep for future reference!

4000369 - Part III

Translation of the original
Doc content: 05.12.2022
Doc type: /
Doc config.: /
/
/
GB

AERZEN

Reherweg 28
31855 Aerzen
Deutschland
Telephone: +49 (0) 5154 81-0
Fax: +49 (0) 5154 81-9191
Email: info@aerzen.com
Internet: www.aerzen.com

Auftrags Nr, 1, en_GB

S3-PM

© Aerzener Maschinenfabrik GmbH 2022

1 Index

Appendix

Table of Contents

A Valves and Accessories/Instrumentation 9
A.1 Heat exchanger 11
A.1.1 Operating instructions 13
A.1.2 Declaration of Conformity 25
A.1.3 Material reference list 27
A.1.4 Material certificates 29
A.1.5 Test certificate 39
A.2 Duplex filter 41
A.2.1 Operating instructions 43
A.2.2 Test documentation 51
A.3 Gear pump unit 53
A.3.1 Gear pump 55
A.3.1.1 Operating instructions 57
A.3.1.2 Declaration of Conformity 121
A.3.1.3 Gear pump 123
A.3.1.3.1 Operating instructions 125
A.3.1.3.2 Declaration of Conformity 139
A.3.1.3.3 Drawing 141
A.3.1.3.4 Replacement parts list 143
A.3.1.3.5 Motor 145
A.3.1.3.5.1 EC type-examination certificate 0
A.3.1.3.5.2 Declaration of Conformity 0
A.3.1.3.5.3 Data sheets 0
A.3.2 Coupling 215
A.3.2.1 Operating instructions 217
A.3.2.2 Declaration of Conformity 245
A.4 Oil heater 255
A.4.1 Operating instructions 257
A.4.2 Declaration of Conformity 267
A.4.3 Drawing 269
A.4.4 Hook-up Diagram 271
A.4.5 Data sheets 273
A.4.6 Quality documentation 275
A.4.7 Test documentation 279
A.5 Thermometer 281
A.5.1 Data sheets 283
A.5.2 Declaration of Conformity 287

A.6 Resistance thermometer 291
A.6.1 Technical documentation 293
A.6.2 Safety instructions 313
A.6.3 Declaration of Conformity 345
A.6.4 EC type-examination certificate 347
A.7 Thermometer gas-acutuated 353
A.7.1 Operating instructions 355
A.7.2 Description 527
A.8 Bimetal thermometer 537
A.8.1 Operating instructions 539
A.8.2 Data sheets 623
A.8.3 Declaration of Conformity 635
A.9 Differential pressure transmitter 639
A.9.1 Operating instructions 641
A.9.2 Declaration of Conformity 843
A.9.3 Certificate 845
A.9.4 Functional desription 849
A.9.5 Safety instructions 997
A.9.6 Material certificates 1025
A.9.7 Test documentation 1031
A.10 Pressure transmitter 1035
A.10.1 Operating instructions 1037
A.10.2 Functional desription 1239
A.10.3 Safety instructions 1387
A.10.4 Declaration of Conformity 1415
A.10.5 EC type-examination certificate 1417
A.10.6 Material certificates 1421
A.10.7 Test certificate 1439
A.11 Temperature transmitter 1443
A.11.1 Operating instructions 1445
A.11.2 EC type-examination certificate 1511
A.11.3 Declaration of Conformity 1513
A.11.4 Safety instructions 1515
A.11.5 Calibration Certificate 1523
A.11.6 Test documentation 1525
A.11.7 Material certificates 1527
A.12 Expansion joint 1533
A.12.1 Operating instructions 1535
A.12.2 Test documentation 1539
A.12.3 Material certificates 1543
A.13 Safety valve 1551
A.13.1 Operating instructions 1553

A.13.2 Data sheets 1555
A.14 Flowmeter 1557
A.14.1 Operating instructions 1559
A.14.2 Data sheets 1635
A.14.3 Certificate 1683
A.14.4 Declaration of Conformity 1693
A.14.5 EC type-examination certificate 1715
A.14.6 Calibration Certificate 1731
A.14.7 Material certificates 1737

A Valves and Accessories/Instrumentation

A.1 Heat exchanger

Name	Data
Designation	Heat exchanger
Type	BCA Shell and Tube Heat Exchangers
Number	
Type of manual	*Technical documentation*
Manufacturer	Funke Wärmetauscher Apparatebau GmbH

A.1.1 Operating instructions

***FUNKE* Wärmeaustauscher Apparatebau GmbH**
Zur Deßel 1 31028 Gronau Telefon: +49 5182 582 0 Telefax: +49 5182 582 48 E-Mail: info@funke.de

Operating and maintenance instruction

Shell-and-tube heat exchangers

for **heat exchangers with non-removable bundles**

FUNKE-Types: BCF, CCF, SSCF, CCFA, SSCFA, C200, CX200, C210, WRA200

for **heat exchangers with U-tube bundles**

FUNKE-Types: BCU, CCU, CCUG, CCUT, SSCU, C300, CX300, C320, TDW, SSW

for **safety type heat exchangers**

FUNKE-Types: SWF, SWP

for **heat exchangers with removable floating tubesheets**

FUNKE-Types: BCP, CCP, SSCP, CP, CXP, A100, C100, CX100, C101,
UNIVEX

for **heat exchangers with removable floating heads**

FUNKE-Types: C400, CX400, C500, CX500

FUNKE Wärmeaustauscher Apparatebau GmbH

Zur Deßel 1 31028 Gronau Telefon: +49 5182 582 0 Telefax: +49 5182 582 48 E-Mail: info@funke.de

Contents:

SECTION		PAGE:
1 GENERAL		**3**
1.1	IDENDIFICATION OF HEAT EXCHANGERS/SERIES	3
1.2	APPLICATION	7
1.3	TECHNICAL DATA	7
2 STRUCTURAL DESIGN		**7**
2.1	STRUCTURAL DESIGN OF A HEAT EXCHANGER	7
3 TRANSPORT		**7**
3.1	LOADING AND UNLOADING	7
3.2	COMPLETENESS	8
3.3	TEMPORARY STORAGE	8
4 OPERATION		**8**
4.1	ASSEMBLY OF HEAT EXCHANGER	9
4.2	PUTTING INTO OPERATION	9
5 MAINTENANCE		**9**
5.1	WORKS TO BE CARRIED OUT	9
5.2	CLEANING	10
5.3	SPARE PARTS LIST	10
6 STOPPAGE		**11**
7 MISCELLANEOUS		**10**
7.1	DISPOSAL OF FUNKE HEAT EXCHANGER	11
7.2	SAFETY INSTRUCTIONS	11
7.3	ADDRESS OF AFTER SALES SERVICE	11
7.4	GUARANTEE	12

FUNKE **Wärmeaustauscher Apparatebau GmbH**
Zur Deßel 1 31028 Gronau Telefon: +49 5182 582 0 Telefax: +49 5182 582 48 E-Mail: info@funke.de

1 General

1.1 Identification of heat exchangers / series

This operating and maintenance instruction is to inform the operators of structure and function of FUNKE heat exchangers and shall be a guidance for proper operation.
Applicable safety regulations to be observed.

FUNKE-Fail-Safe heat exchangers:
The FUNKE Fail-Safe Heat Exchanger may be described as „two Heat Exchangers in one“. Instead of one tube wall the two kinds of fluid will be separated by two tube walls. Between the tube walls a separating liquid – also suited for the food sector – is contained. The separating liquid which is transferring the heat is connected to a compensation device and a pressure control. At a break-through of a tube wall the fluid pressure is self-propagating immediately over the separating liquid to the pressure control through which the electrical switch will be actuated. By this the leakage is announced and – depending on the system - alarm will be initiated or the heat exchanger will be stopped.

The FUNKE Fail-Safe Heat Exchanger is allowed to be operated only with media, suitable for used material.

All FUNKE heat exchangers are provided with name plate with all fundamental data, describing the heat exchanger.

The FUNKE-heat exchanger is a pressure vessel and is governed by pressure vessel rules 97/23/EG of 29th May, 1997 or other international rules.

To answer you any question regarding heat exchangers, we need to know the following data: type, drawing number, serial number and number of order confirmation.

Description of items:

1	bonnet	16	flat gasket connection bonnet
2	connection flange bonnet	17	flat gasket fixed tubesheet shell
3	fixed tubesheet	18	flat gasket bonnet
4	floating tubesheet	19	flat gasket shell cover
5	tube	20	packing ring
6	baffle	21	lantern ring
7	shell	22	packing gland
8	connection flange shellside	23	plate
9	expansion bellow	24	plate
10	shell cover	25	channel cover
11	bonnet	26	flange cast iron bonnet
12	vent	27	gasket - cast iron bonnet
13	drain	28	pressure control
14	backing ring	29	expansion tank
15	saddle	30	zinc anode

FUNKE Wärmeaustauscher Apparatebau GmbH
Zur Deßel 1 31028 Gronau Telefon: +49 5182 582 0 Telefax: +49 5182 582 48 E-Mail: info@funke.de

Fail-Safe Heat Exchanger
SWF

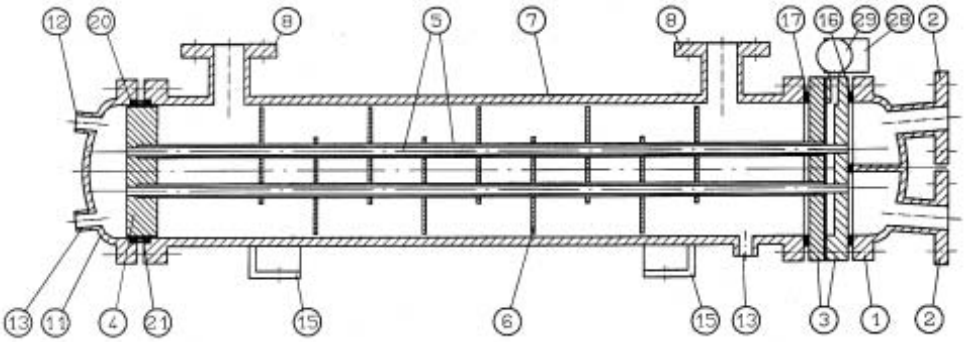

SWP

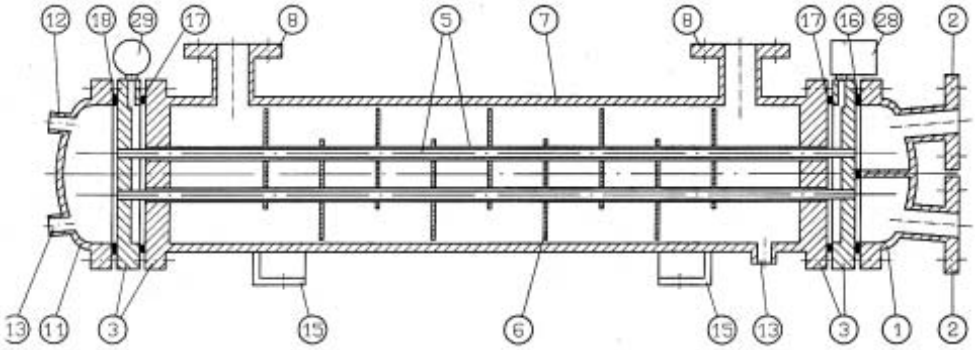

Heat Exchanger removable, with floating tubesheet

CP

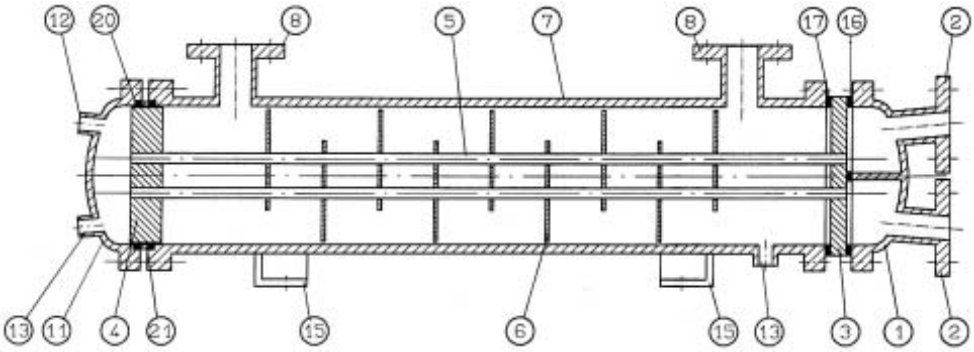

L:\USER\AVER\Bedien\Sourcen\RBW1\Englisch\Bedienungs englisch.doc

***FUNKE* Wärmeaustauscher Apparatebau GmbH**
Zur Deßel 1 31028 Gronau Telefon: +49 5182 582 0 Telefax: +49 5182 582 48 E-Mail: info@funke.de

C100

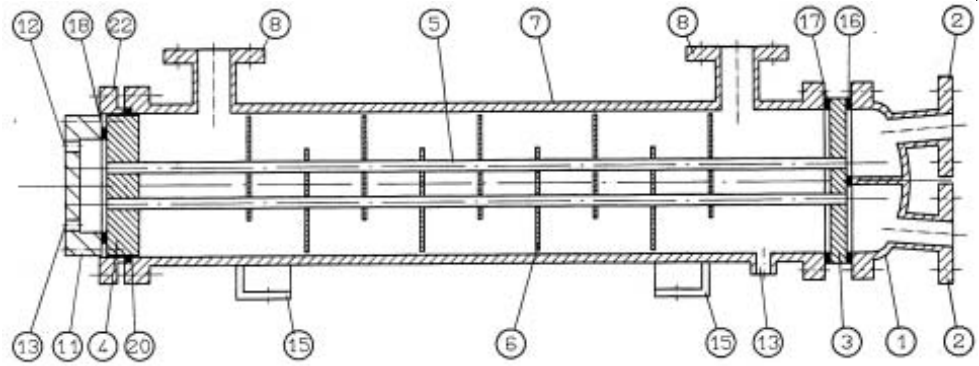

Heat Exchanger with fixed tubesheet

C200

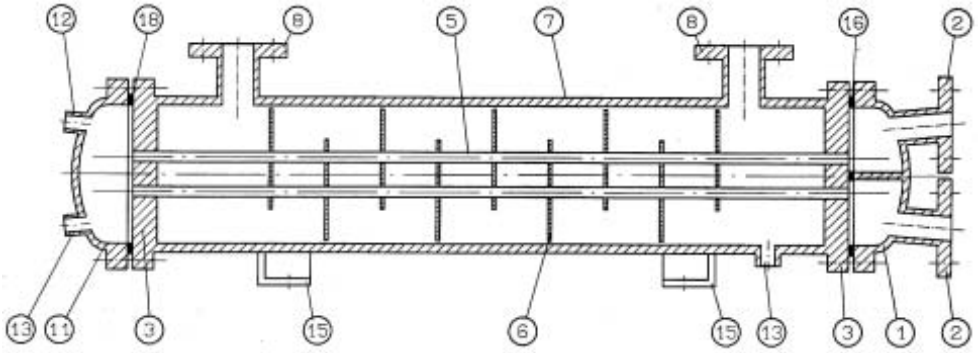

Heat Exchanger with U-tube bundle

C300

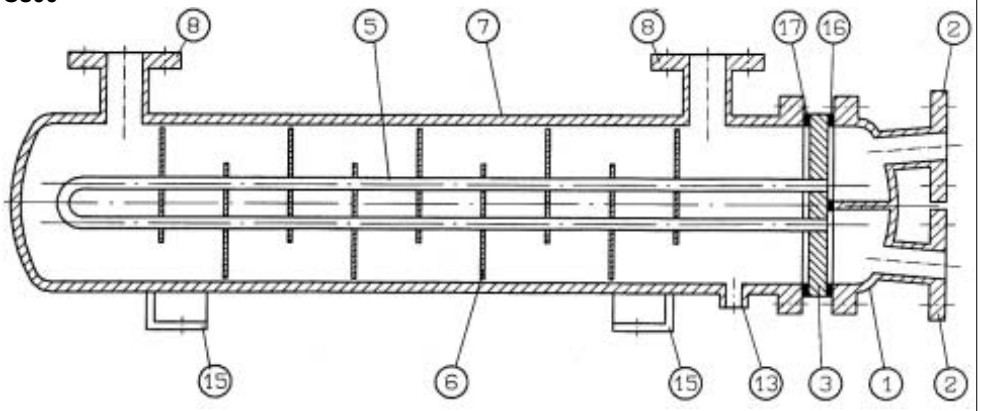

L:\USER\AVER\Bedien\Sourcen\RBWT\Englisch\Bedienungs englisch.doc

FUNKE Wärmeaustauscher Apparatebau GmbH
Zur Deßel 1 31028 Gronau Telefon: +49 5182 582 0 Telefax: +49 5182 582 48 E-Mail: info@funke.de

Heat Exchanger with floating head
C400

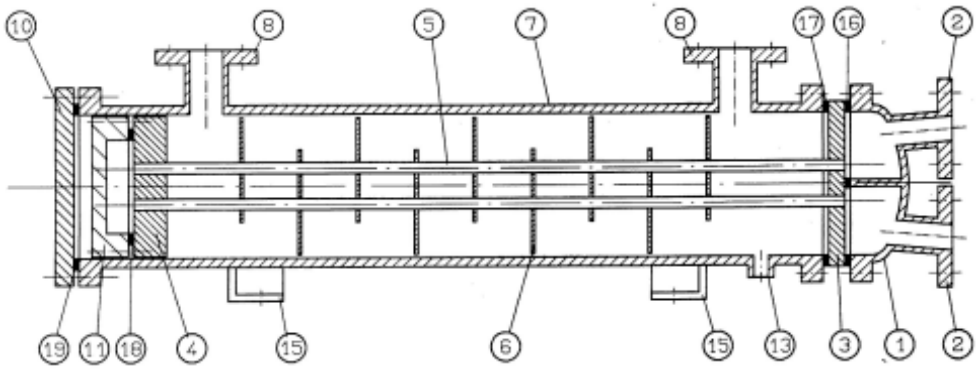

C500

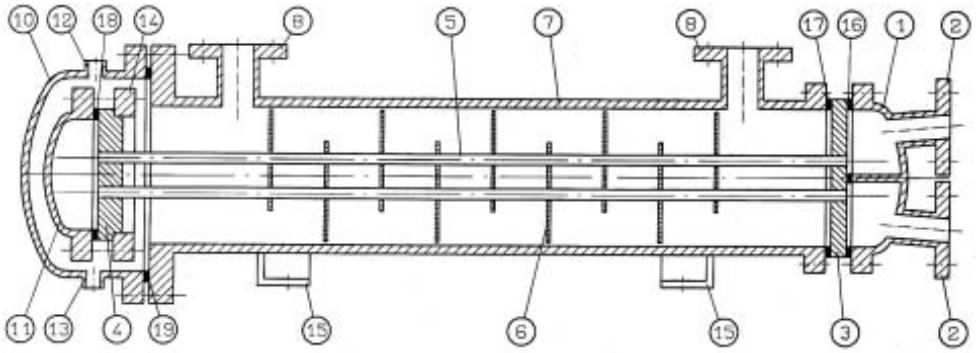

Further types

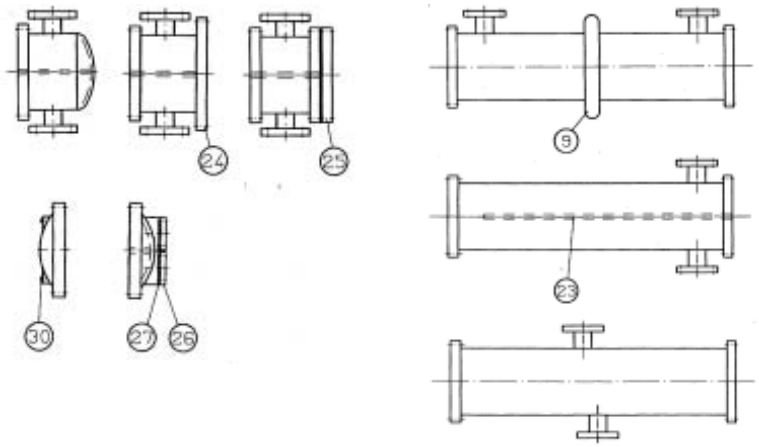

L:\USER\AVER\Bedien\Sourcen\RBW1\Englisch\Bedienungs englisch.doc

FUNKE **Wärmeaustauscher Apparatebau GmbH**
Zur Deßel 1 31028 Gronau Telefon: +49 5182 582 0 Telefax: +49 5182 582 48 E-Mail: info@funke.de

1.2 Application

FUNKE-heat exchangers are transferring heat from one media to another without mixing of both media.

A tube bundle is used. One medium flows through the tubes.
The second medium flows around the tube bundle. Therefore, we also say tubeside and shellside.
To ensure an optimum efficiency of the FUNKE-heat exchangers, segmental baffles are arranged shellside, by which the shellside medium is flowing in different directions crosswise to the tube bundle.
The heat exchanger type TDW has no segmental baffles but spirals instead.

FUNKE-Safety Type Heat Exchanger:
The FUNKE-safety type heat exchanger is used in such cases where an intermixing of the two media, flowing through the heat exchanger shall be avoided in any case.
The media may be gaseous or liquid.

1.3 Technical Data

Technical data are shown on the specification sheet or the corresponding heat exchanger brochure.

Funke-Safety Type Heat Exchanger:
To ensure the function of the FUNKE Safety Type Heat Exchanger, the fluid pressure at all points within the heat exchanger has to be at least 0,6 bar and the pressure control must be adjusted to a value of at least 30 % below the min. fluid pressure. By the manufacturer the pressure control has been adjusted to 0,5 bar. An adjustment below 0,4 bar may initiate alert.

In case of a vacuum the safety zone can be controlled by a safety unit with special pressure control. Further control possibilities on request.
Separating liquid is suited for the food sector and frost-proof to –20°C. In this case the indicated operating pressure shall be checked regularly.
The pressure state as supplied must be permanently kept.

2 Structural design

2.1 Structural design of a heat exchanger

Structural design of the heat exchanger is shown on the corresponding drawing or brochure.

3 Transport

3.1 Loading and unloading

For loading and unloading always use suitable lifting devices
If heat exchangers dispose of lifting lugs, please use them for lifting.

***FUNKE* Wärmeaustauscher Apparatebau GmbH**
Zur Deßel 1 31028 Gronau Telefon: +49 5182 582 0 Telefax: +49 5182 582 48 E-Mail: info@funke.de

For transport of the FUNKE heat exchangers a clamping belt is recommended to avoid any damage.

The surface area of the FUNKE-heat exchanger shall not be damaged.

Furthermore, please check if all openings are tightly locked.

3.2 Completeness

On receipt of FUNKE heat exchanger please check if the consignment is complete and in faultless condition. The delivery scope is shown on the delivery note. Any transport damage to be noted down on the delivery note of the corresponding forwarder immediately after receipt of goods.

3.3 Temporary storage

For temporary storage of the FUNKE heat exchangers care for a levelled ground with soil stability to ensure a safe storage of the heat exchanger. FUNKE heat exchangers have to be protected against weathering influence.

FUNKE **Wärmeaustauscher Apparatebau GmbH**
Zur Deßel 1 31028 Gronau Telefon: +49 5182 582 0 Telefax: +49 5182 582 48 E-Mail: info@funke.de

4 Operation

4.1 Installation of the heat exchanger

Before installing the FUNKE-heat exchanger please check if operating data correspond with the data shown on the name plate and if the heat exchanger shows visible damages.
It is very important to check the tubes, i.e. to check if all plugs, applied for transport, are removed, etc. Furthermore, guidance of the media must be observed.

To ensure stability of the FUNKE heat exchangers, anchor bolts should be fixed to the saddle.

Piping to be connected strainless to resist any leakage.

It is supposed that only proper bolts and gaskets will be used for flange connection and that piping to be connected is without pressure during assembly.

Before the FUNKE-heat exchanger will be loaded with pressure, all connection bolts shall be tightened or retightened (possibly gaskets have settled).

Torsional moments shown on the drawings shall be complied with.

4.2 Putting into operation

Now the FUNKE heat exchanger can be filled with chosen media and afterwards shall be vented. Otherwise heat transfer may be diminished.

Pressurising must be continuously and not suddenly to avoid any risk to damage the FUNKE heat exchanger internally.

First the cold medium and then the hot medium shall be connected.

Then all flange connections and screwed joints shall be checked for tightness.

After starting operation connection bolts shall be etightened again.

FUNKE-Fail-Safe Heat Exchanger:
Pressure control to be connected according to circuit diagram (in pressure control or on operation instruction).

5 Maintenance

5.1 Works to be carried out

Legal rules shall be met as regards test periods.

Maintenance works on FUNKE-heat exchangers only to be done in pressureless condition of the heat exchanger.

FUNKE **Wärmeaustauscher Apparatebau GmbH**
Zur Deßel 1 31028 Gronau Telefon: +49 5182 582 0 Telefax: +49 5182 582 48 E-Mail: info@funke.de

Unit to be serviced periodically, depending on fouling conditions. Cleaning recommended every 500 to 2000 operating hours.

If efficiency is dropping, the heat exchanger should be vented or cleaned.

If heat exchangers consist of zinc corrosion arresters, replace these if a marked corrosion visible. If insulated with scale, remove scale. Zinc anodes are equipped with signal-bore. Replacement of zinc anodes necessary, if water leaks through.

Clean all dirt traps/filters in the respective circuit.

Unscrew and remove bonnets, carefully inspect tubes for corrosion or erosion as well as for foreign matters and clean if required.

FUNKE-Fail-safe heat exchanger:
The fail-safe system with pressure control and compensation device is a closed system and requires no maintenance. If in case as result of an improper opening the separating liquid escapes, it becomes necessary to refill the separating liquid in any case.
Small quantities of separating liquid are available at FUNKE and can be refilled on the spot. It must be taken care that the compensation device will be refilled to the middle without air.
In order to refill the compensation device open closing cap of lateral nozzle. Refill only to max. 50 % of the volume of the compensation device. The filler neck in horizontal position delimits the max. filler level limits the max. filling level. If large quantities of separating liquid escaped, the unit must be sent to FUNKE for repair.

5.2 Cleaning

FUNKE heat exchangers can be cleaned manually or chemically.

Manual cleaning through the tubes with focused beam of water. Remove obstinate residues by means of nylon brush.

Around the tubes, only chemical cleaning possible (depending on tube pitch).

Decalcify chemically through and around the tubes with proper cleaning agent, depending on material. The system shall be open, as gases become free. It must be ensured that these gases will not be inhaled.

For the purpose of neutralisation flush with a 5 % sodium carbonate solution. Oil residues can be removed with P 3.

5.3 Spare parts list

For each FUNKE heat exchanger a spare parts list is available on request.

To guarantee serviceability, only FUNKE ORIGINAL spare parts are allowed to be used.

Only FUNKE ORIGINAL wearing parts like zinc anodes and gaskets are allowed to be used.)

FUNKE **Wärmeaustauscher Apparatebau GmbH**
Zur Deßel 1 31028 Gronau Telefon: +49 5182 582 0 Telefax: +49 5182 582 48 E-Mail: info@funke.de

6 Stoppage

Before stoppage of the FUNKE heat exchanger the plant user must ensure that operational safety of the plant will not be affected.

Close all shut-off fittings before and behind the heat exchanger. Pressure must be discharged without danger. Check if the operating pressure gauge shows pressureless state. Furthermore, check if the temperature cooled down is lower than 40°C.

If explosive and toxic or ecologically damaging media are used, it must be ensured that they will not escape when loosening the tube joints.

In case of explosive or toxic gases or gas mixtures, the FUNKE heat exchanger is always to be purged before opening.

When opening the FUNKE heat exchanger face masks should be put on, depending on media.

7 Miscellaneous

7.1 Disposal of FUNKE-heat exchangers

Disposal of FUNKE-heat exchangers shall be the duty of the plant operator. He must ensure that current legal requirements, effective when disposing the heat exchanger, will be complied with.

7.2 Safety instructions

The plant operator has to ensure that the operating- and maintenance staff disposes of sufficient knowledge necessary to operate and maintain the heat exchanger.
He especially must ensure that all safety regulations will be complied with.

FUNKE-Fail-Safe heat exchangers:
By no means the fail-safe system shall be opened. Otherwise the function of the heat exchanger and thus safety would be affected.(Just unscrew cover bolts and not shell bolts.)

7.3 Adress for after-sales-service

FUNKE Wärmeaustauscher Apparatebau GmbH
Zur Deßel 1
D-31028 Gronau (Leine)
Tel: +49 5182 582 0
Fax: +49 5182 582 48
E-mail: info@funke.de

***FUNKE* Wärmeaustauscher Apparatebau GmbH**
Zur Deßel 1 31028 Gronau Telefon: +49 5182 582 0 Telefax: +49 5182 582 48 E-Mail: info@funke.de

7.4 Guarantee

Within the scope of our “General Sales Conditions” we shall not be liable for corrosion, vibration and oscillation, for fouling or for failure and defects, caused by improper maintenance and installation/application.

A.1.2 Declaration of Conformity

FUNKE

Konformitätserklärung
Declaration of Conformity

für Druckgeräte gemäß der Richtlinie über Druckgeräte 2014/68/EU des Europäischen Parlaments und des Rates vom 15. Mai 2014 (Druckgeräterichtlinie – DGRL) über die Konstruktion, Fertigung, Prüfung von	**of pressure equipment according to Pressure Equipment Directive 2014/68/EU of the European Parliament and the Council of May, 15th 2014 (pressure Equipment Directive – PED) in design, manufacturing, product verification of**

BCF Rohrbündelwärmeaustauscher
BCF Shell and tube heat exchangers

Angaben zum Behälter **Date about the vessel limits**	BCF (siehe Typenschild / see name plate)
Angaben der Betriebsgrenzen **Data about working limits**	siehe Typenschild / see name plate
Normen, Regelwerk / Standards	Europäische Druckgeräterichtlinie (gem. 2014/68/EU) European Pressure Equipment Directive (PED 2014/68/EU)

Druckgerätegruppe gemäß DGRL, Artikel 4 / Pressure equipment group according to PED, article 4 1 (a)

Konformitätsbewertungsverfahren nach Anhang II **Conformity assessment procedure in accordance to annexure II**	Module / modules B+D (EG-Baumusterprüfung + Qualitätssicherung Produktion) (EC type examination + Production quality assurance)
Notifizierte Stelle gemäß DGRL, Artikel 20 **Notified Body in accordance to PED, article 20**	TÜV Nord Systems GmbH & Co. KG Große Bahnstraße 31; D – 22525 Hamburg
CE-Kennzeichnung der Druckgeräte, Artikel 18 **CE sign on pressure equipment, , article 18**	Registriernummer der Benannten Stelle 0045 Notification number of Notified Body

Erteilte Zertifikate / Given certificates

Modul B / Module B

07 202 1042 Z 0556/13/D	BCF 2''	Gültig bis/ valid until 2023-04
07 202 1042 Z 0556/13/D	BCF 3''	Gültig bis/ valid until 2023-04
07 202 1042 Z 0556/13/D	BCF 4''	Gültig bis/ valid until 2023-04
07 202 1042 Z 0556/13/D	BCF 5''	Gültig bis/ valid until 2023-04
07 202 1042 Z 0556/13/D	BCF 6''	Gültig bis/ valid until 2023-04
07 202 1042 Z 0556/13/D	BCF 8''	Gültig bis/ valid until 2023-04

Name of base model as mentioned above consists of letters and numerals to describe model series (BCF) and model diameter (i.e. 2''). The complete name of a heat exchanger contains additional letters and numeral like diameter, size, baffles, no. of ways, particular function or special features etc.

Modul D / Module D
0045/202/1042/Z/00919/20/D/001(00)

Der Hersteller erklärt hiermit, dass Konstruktion, Herstellung und Prüfung der vorgenannten Druckbehälter den Anforderungen der Richtlinien über Druckgeräte 2014/68/EU entsprechen

The manufacturer herewith declares that design, production and product verification of pressure vessels mentioned above is in conformity with European Pressure Equipment Directive 2014/68/EU.

FUNKE Wärmeaustauscher
Apparatebau GmbH
Zur Dessel 1
31028 Gronau (Leine)
Germany

i.V. Mario Reiss
Head of Quality Assurance

Rev.1
19.07.2016

A.1.3 Material reference list

FUNKE
Funke Wärmeaustauscher Apparatebau GmbH
Zur Dessel 1, D-31028 Gronau (Leine)

Aufstellung der drucktragenden Teile gemäß DGRL (PED) 2014/68/EU / Hersteller Standard
Statement of all pressure parts accordance DGRL (PED) 2014/68/EU / Hersteller Standard

Zeichnung: 750 994 004 0 (drawing) **Werks-/Auftrags-Nr.:** 3 392 670 (works-/order-No.) **Geräte Nr:** 989948- 989953 (serial no) **Seite:** 1/1 (page)

Pos. item	Anzahl pieces	Werkstoffbezeichnung/Kurzname material/designation	Abmessung/ Dicke mm dimension/ thickness mm	Hersteller producer	Art/Nr. der Bescheinigung kind/No. of certificate		vorhandene Kennzeichnung original-stamp	umgestempelt mit punched with
1	1	Ms ELEMENT/ELEMENT bestehend aus/consisting of:						
1.1	1	CuZn37Pb0.5 ROHR/PIPE	Ø206.4*2.69*	Wieland-Werke	AB-Nr. 12228812 001	3.1	CuZn37Pb0.5 55134669 On Label	
1.2	1	CuZn38Al-C-GM ROHRBODEN/TUBESHEET	BCF 8"	Piel & Adey	165888	3.1	CuZn38Al-C-GM 2 1Punkt	
1.3	1	CuZn38Al-C-GM ROHRBODEN/TUBESHEET	BCF 8"	Cert. look Pos. 1.2		3.1	CuZn38Al-C-GM 2 1Punkt	
1.4	210	1.4571 INNENROHR/TUBE	Ø9.5*0.8*	CSM Tube	5288/21	3.1	1.4571 803002	
				CSM Tube	4049/20	3.1	1.4571 945113	
2	1	EN-GJL-200 ANSCHLUSSDECKEL/CONNECTION COVER	8"-4WEG	Gattermann	339/21	3.1	EN-GJL-200 182172 111/21	
3	1	EN-GJL-200 UMLENKDECKEL/REVERSE BONNET	8"-4WEG	Gattermann	12/21	3.1	EN-GJL-200 178505345	

Die Meßergebnisse liegen im Bereich der zulässigen Werte.
The test results are within acceptable tolerances.

Für die Richtigkeit Prüfaufsicht Funke GmbH
For the rightness Inspector Funke GmbH

Gronau (Leine), den 05.04.2022/he
Place,date

FUNKE

A.1.4 Material certificates

Pos: 1.1 Page: 1/4

wieland

ÜBERPRÜFT
Von Zeiske , 16:22, 23.11.2021

Wieland-Werke AG D-89079 Ulm

FUNKE Wärmeaustauscher
Apparatebau GmbH
Zur Dessel 1
31028 Gronau

Verladezone/Verladenr.	: 4/20662287
Chargennummer	: **55134669**
Ansprechpartner	: Frau Niegisch
Telefon	: 0731 944- 2672
Fax	: 944-2350
Ihre Bestell-Nr.	: 1201954
vom	: 12.05.2021
Ihr Fax	: 05182/582-48
Unsere Auftrags-Nr.	: 12228812 001
Unsere Prüflos-Nr.	: 040006811887
Unsere Lieferschein-Nr.	: 83017618 010
Liefermenge	: 202,000 KG
Druckdatum	: 12.11.2021

120 5508

Abnahmeprüfzeugnis 3.1 nach EN 10204 : 2004

Halbzeug:	Profil-Nummer:	Abmessungen:		
Rohre gezogen (Längen)		Maß A: 206,400 mm	-0,350	+0,350
Werkstoff:	Ausführung:	Maß B:		
Wieland Z10 CUZN37PB0,5	gezogen, therm. entspannt	Maß C: 2,690 mm	-0,080	+0,080
		Maß D: 5.000,00 mm	-500,00	+500,00
Spezifikation:	Revision/Ausgabedatum:			
Analyse: EN 12449	:2016-11			
Mech.Kennwerte:				
Maße: Wieland Qualitätsrohr		QUALITÄTSROHR		

Bemerkungen:
Ihre Material-Nr.: Zchng.-Nr. 825006805613

Chemische Zusammensetzung nach 3.1 EN 10204 : 2004

Prüfmerkmal	Einheit	Ist-Werte	Soll-Werte bzw. Richtwert (R) Min.	Max.	Probe
Die Summe der sonstigen Elemente entspricht der in der chemischen Norm genannten Vorgabe.					
Cu Kupfer-Gehalt	%	63,0500	62,0000	64,0000	
Fe Eisen-Gehalt	%	0,0176		0,1000	
Pb Blei-Gehalt	%	0,3130	0,1000	0,8000	
Ni Nickel-Gehalt	%	0,0246		0,3000	
Sn Zinn-Gehalt	%	0,0089		0,2000	
Zn Zink-Gehalt	%			Rest	
Al Aluminium-Gehalt	%	< 0,0005		0,0500	

SYSTEM CERTIFICATION ISO 9001 SGS

Hersteller-kenn-zeichen: W

Vorstand:
Dr. Erwin Mayr, Vorsitzender
Gregor Tschernjavski

Vorsitzender des Aufsichtsrates:
Fritz-Jürgen Heckmann
Sitz der Gesellschaft: Ulm
Registergericht Ulm, HRB 1256
St.-Nr. 88004/76900
USt-IdNr.: DE811147730

Pos: 1.1 Page: 2/4

wieland

Abnahmeprüfzeugnis 3.1 nach EN 10204 : 2004

FUNKE Wärmeaustauscher Zur Dessel 1 31028 Gronau	Lieferschein-Nr. - Pos. 83017618 010	Seite 2

Maßprüfungen

Prüfmerkmal	Einheit	Ist-Werte Min.	Ist-Werte Max.	Soll-Werte bzw. Richtwert (R) Min.	Soll-Werte bzw. Richtwert (R) Max.	Probe (Anz.)
Durchmesser außen Mittelwert	mm		206,465	206,050	206,750	(1)
Länge	mm		4505,00	4500,00	5500,00	(1)
Ungleichwandigkeit	%		5,1		10,0	(1)
Wanddicke mit Ungleichwandigkeit	mm	2,620	2,900	2,340	3,040	(1)
Wanddicke Mittelwert	mm		2,760	2,610	2,770	(1)

Mechanische Prüfmerkmale

Prüfmerkmal	Einheit	Ist-Werte Min.	Ist-Werte Max.	Soll-Werte bzw. Richtwert (R) Min.	Soll-Werte bzw. Richtwert (R) Max.	Probe (Anz.)
Härte Brinell HBW 1/10			122			(1)

Weitere Prüfungen

Prüfmerkmal	Einheit	Ist-Werte Min.	Ist-Werte Max.	Soll-Werte bzw. Richtwert (R) Min.	Soll-Werte bzw. Richtwert (R) Max.	Probe (Anz.)

Massprüfung	Ergebnis gut
Sichtprüfung	Ergebnis gut

Konformitätserklärung

Wir erklären als Hersteller, daß die hier beschriebene Ware den mit dem Käufer vereinbarten Spezifikationen sowie den oben aufgeführten Normen und normativen Vorschriften, der angegebenen Beschreibung, der genannten Menge und den in diesem Zeugnis gemachten Angaben entspricht.
Diese Ware wurde unter einem zertifizierten Qualitätsmanagementsystem hergestellt. Unser Qualitätsmanagementsystem wird von SGS laufend überwacht (Zertifikat DE21/819945125 und DE21/819945126).
Die Prüfergebnisse zur chemischen Analyse, zu den mechanisch-technologischen und physikalischen Prüfverfahren wurden durch das zertifizierte und / oder akkreditierte Prüflabor festgestellt.

Achim Peschke (Abnahmebeauftragter des Herstellers)
Telefon:+49-731-944-2174 Fax:+49-731-944-4608
e-mail: achim.peschke@wieland.com
Maschinell erstelltes Abnahmeprüfzeugnis

SYSTEM CERTIFICATION ISO 9001 SGS

Hersteller-kenn-zeichen: W

Vorstand:
Dr. Erwin Mayr, Vorsitzender
Gregor Tschernjavski

Vorsitzender des Aufsichtsrates:
Fritz-Jürgen Heckmann
Sitz der Gesellschaft: Ulm
Registergericht Ulm, HRB 1256
St.-Nr. 88004/76900
USt-IdNr.: DE811147730

Pos: 1.1 Page: 3/4

wieland

Wieland-Werke AG D-89079 Ulm

FUNKE Wärmeaustauscher
Apparatebau GmbH
Zur Dessel 1
31028 Gronau

Loading area/ No.	: 4/20662287
Heat No.	: **55134669**
Please contact	: Mrs Niegisch
Telephone	: 0731 944- 2672
Fax No.	: 0731 944-2350
Your order No.	: 1201954
Date	: 12.05.2021
Your fax No.	: 05182/582-48
Order confirmation No.	: 12228812 001
Inspection lot No.	: 040006811887
Our delivery note No.	: 83017618 010
Quantity delivered	: 202,000 KG
Date	: 12.11.2021

Inspection certificate 3.1 as per EN 10204 : 2004

Product:		section number:	Dimensions:		
Tubes drawn (str. l.)			Dim A: 206,400 mm	-0,350	+0,350
Material:		Temper:	Dim B:		
Wieland Z10 CUZN37PB0,5		drawn therm. stress rlvd.	Dim C: 2,690 mm	-0,080	+0,080
			Dim D: 5.000,00 mm	-500,00	+500,00
Specification:		Revision/Date of issue:			
Analysis:	EN 12449	:2016-11			
Mech.parameters:					
Dimensions:	Wieland Qualitätsrohr		QUALITÄTSROHR		

Remarks:
Your material code No. : Zchng.-Nr. 825006805613

Chemical composition as per 3.1 EN 10204 : 2004

Test method	Unit	Measured	Specified / Reference (R) Min.	Max.	Spec
The sum of the other elements corresponds to what is specified in the chemical standard.					
Cu Copper	%	63,0500	62,0000	64,0000	
Fe Iron	%	0,0176		0,1000	
Pb Lead	%	0,3130	0,1000	0,8000	
Ni Nickel	%	0,0246		0,3000	
Sn Tin	%	0,0089		0,2000	
Zn Zinc	%			balance	
Al Aluminium	%	< 0,0005		0,0500	

SYSTEM CERTIFICATION ISO 9001 SGS

Hersteller-kenn-zeichen: W

Vorstand:
Dr. Erwin Mayr, Vorsitzender
Gregor Tschernjavski

Vorsitzender des Aufsichtsrates:
Fritz-Jürgen Heckmann
Sitz der Gesellschaft: Ulm
Registergericht Ulm, HRB 1256
St.-Nr. 88004/76900
USt-IdNr.: DE811147730

Pos: 1.1 Page: 4/4

wieland

Inspection certificate 3.1 as per EN 10204 : 2004

FUNKE Wärmeaustauscher Zur Dessel 1 31028 Gronau	Delivery note no. Item 83017618 010	Page 2

Method of control of dimensions

Parameter tested	Unit	Measured Min.	Measured Max.	Specified / Reference (R) Min.	Specified / Reference (R) Max.	Spec (No.)
Mean outside diameter	mm		206,465	206,050	206,750	(1)
Length	mm		4505,00	4500,00	5500,00	(1)
Eccentricity	%		5,1		10,0	(1)
Wall thickness incl. eccentricity	mm	2,620	2,900	2,340	3,040	(1)
Mean wall thickness	mm		2,760	2,610	2,770	(1)

Mechanical testing

Parameter tested	Unit	Measured Min.	Measured Max.	Specified / Reference (R) Min.	Specified / Reference (R) Max.	Spec (No.)
Brinell Hardness HBW 1/10			122			(1)

Further inspections

Parameter tested	Unit	Measured Min.	Measured Max.	Specified / Reference (R) Min.	Specified / Reference (R) Max.	Spec (No.)
Dimensional check		Result good				
Visual check		Result good				

Attestation of conformity

As manufacturer we declare that the products described herein comply with the specifications agreed with the purchaser, with the above-mentioned standards, descriptions, quantity and the data indicated in this certificate.
These products have been manufactured to our certified quality system. Our quality system is subjected to regular inspection by SGS (reg.no. DE21/819945125 and DE21/819945126).
The results of the chemical analysis and of the mechanical-technological and physical tests have been determined by our test laboratory which has been certified and / or accredited.

Achim Peschke (Supervisor)
Telephon:+49-731-944-2174 Fax:+49-731-944-4608
e-mail: achim.peschke@wieland.com
Computer-generated inspection certificate

SYSTEM CERTIFICATION ISO 9001 SGS

Hersteller-kenn-zeichen: W

Vorstand:
Dr. Erwin Mayr, Vorsitzender
Gregor Tschernjavski

Vorsitzender des Aufsichtsrates:
Fritz-Jürgen Heckmann
Sitz der Gesellschaft: Ulm
Registergericht Ulm, HRB 1256
St.-Nr. 88004/76900
USt-IdNr.: DE811147730

Pos: 1.2+1.3 Page: 1/1

PIAD
Member of the Breuckmann Group

ÜBERPRÜFT
Von Zeiske , 14:12, 23.03.2022

PIAD GmbH

Funke Wärmeaustauscher
Apparatebau GmbH
Zur Dessel 1
31028 Gronau/Leine

PIAD GmbH

Phone	+49 2056 5801-0
Fax	+49 2056 5801-33
E-Mail	info@piad.de
Homepage	www.piad.de

Contact person	Direct dialing	Fax	E-Mail	Date
				18.03.22

Certificate no. 165888

Inspection certificate DIN EN 10204-3.1

Order no	Order date	Order no	Delivery No.	Delivery date	Piece
1204356 POS. 1	16.09.21	AUF161229	AL162908	17.03.22	24

Article number	Description	Alloy
03048-2	Rohrboden BCF 8"	CuZn38Al-C-GM

Drawing number	Ident. number
750 096 600 6 43 (5)	750 096 600 6

Chemical composition

AL	CU	NI	ZN	FE	MN
0,189	62,100		37,480	0,003	0,001

P	PB	SI	SN
0,002	0,007	0,167	0,008

Hardness	78,0 HBW 5/250
tensile strength	417,0 N/mm²
yield strength	153,0 N/mm²
elongation	53,0 %

Requirements according AD2000 W6 / to approval
811-1047689PIAD

According to DIN EN 1982.

This certification was provided by machine and is valid without signature.

PIAD GmbH
Dieselstraße 26
42579 Heiligenhaus
Deutschland

Betriebsstätte:
Lehner Straße 19 - 23
42655 Solingen

T +49 (0) 212 20631-0
W www.piad.de
E info@piad.de

Amtsgericht Wuppertal: HRB 30936
St.-Nr.: 139/5820/1729
Geschäftsführer:
Michael Breuckmann

Commerzbank AG Wuppertal
IBAN: DE76 3304 0001 0293 2853 00
BIC (SWIFT): COBADEFFXXX

Pos: 1.4 Page: 1/1

CSM TUBE

CSM TUBE spa
Via del Lavoro,60
31013 CIMAVILLA DI CODOGNE' (TV) – ITALY
Phone +39 0438 471100
Fax +39 0438 470606
www.csmtube.com
info@csmtube.com

COMPANY WITH MANAGEMENT SYSTEM CERTIFIED BY DNV
ISO 9001 • ISO 14001
ISO 45001

C.F. / P.IVA IT 02478770262 – REA TV N. 212725 – Reg. Imprese 02478770262 Cap. Soc. Euro 1.000.000,00 i.v.

CERTIFICATO/CERTIFICATE 3.1

NORMA/STANDARD EN 10204

N° 5288/21 18/11/2021

FUNKE

ZUR DESSEL 1

31028 GRONAU (LEINE)
GERMANIA

checked for Q.C.M
Sign.: Date: 25.11.2021

Att. Responsabile Qualità/Quality Resp.
Fax no. 0049-5182-582-55

DATI GENERALI / GENERAL DATA

D.D.T. 11098 18/11/21 *Fatt./Invoice* Mt. 2616,40

Ordine/Order 1201831 *CSM batch n.* 21004301 *Mater./Alloy* 1.4571 - TP 316T

Yr. item 823 216 907 632 *Colata/Heat n.* 803002 *Finitura/Finishing* 2B

Quantità/Quantity (m) 2616,40 *Diametro/Diameter (mm)* 9,50 *Spessore/Thickness (mm)* 0,80 *Pezzi/Pieces* 422 *Lunghezza/Lenght (mm)* 6200,00

ANALISI CHIMICA DELLA MATERIA PRIMA / RAW MATERIAL CHEMICAL COMPOSITION

I valori sotto riportati sono copia conforme di quelli riportati nel certificato del produttore per i quali CSM Tube s.p.a. garantisce la tracciabilità / The values below are a true copy of those reported in the manufacturer's certificate for which CSM Tube s.p.a.

chemical element	Cr	Ni	Mn	Si	Ti	Mo	Fe
reference standard (%)	(16,500-18,000)	(10,500-13,500)	(0,000-2,000)	(0,000-0,750)	(0,100-0,700)	(2,000-2,500)	
measured value (%)	16,610	10,570	1,200	0,450	0,272	2,030	
chemical element	**S**	**Cu**	**C**	**P**	**N**	**Al**	**Nb**
reference standard (%)	(0,000-0,030)		(0,001-0,080)	(0,000-0,045)			
measured value (%)	0,007		0,023	0,033	0,011		

CARATTERISTICHE MECCANICHE MATERIA PRIMA/RAW MATERIAL MECHANICAL PROPERTIES

Carico rottura/Tensile strength	Carico di snervamento/Yield strength		Allungamento/Elongation		Durezza/Hardess (If required)	
Rm (N/mm²)	Rp 0,2% (N/mm²)	Rp 1% (N/mm²)	A (50) %	A (80) %	HV5	HrB
624,00	292,00	320,00	52,00	49,00		131,00

MECHANICAL PROPERTIES OF THE TUBE ACCORDING TO UNI EN ISO 6892-1 and ASME SA370.

Tensile tests performed directly in the Tube (lenght of specimen 2"; width of specimen, the diameter itself)

Sample	Carico rottura/Tensile strength	Carico di snervamento/Yield strength		Allungamento/Elongation	Durezza/Hardess (If required)	
	Rm (N/mm²)	Rp 0,2% (N/mm²)	Rp 1% (N/mm²)	A %	HV5	HrB
1	571,99	313,38	336,32	47,64		85,00
2	564,88	282,80	308,03	50,42		86,00
3	575,93	297,39	325,22	46,11		87,00
4	586,63	312,59	338,49	46,14		88,00
5	580,63	305,90	330,29	45,89		89,00
6						
7						
8						
9						
10						

CARATTERISTICHE PRODOTTO FINITO/PRODUCT PROPERTIES

Tube heat treated at 1050 °C W2R and cooled in protective atmosphere N2 + H2 : tolerance D4/T3

Welding proc. GTAW (141). Welding Factor V=1. Marking: manifacture''s name, dimensions of tubes, alloy, cast number, batch number, standards, welded

PMI 100% satisfactory

NORMATIVE DI RIFERIMENTO PER IL PRODOTTO FINITO/PRODUCT - STANDARDS

ASME SA249/ASTM A249	Standard Specification for Welded Austenitic Steel Boiler,Superheater, Heat-Exchanger, and Condenser Tubes	OK
EN 10217-7	Welded steel tubes for pressure purposes: Technical delivery conditions. Part 7: Stainless steel tubes	OK
EN ISO 10893/1 10893/2	Not destructive testing of steel tubes: Automatic eddy current testing PART 1: for verification of hydraulic leaktightness - PART 2: for the detection of imperfection	OK
EN 8493	Drift expanding test	OK
ASME E426-Last Rev.-	Standard for Eddy-Current Examination of Welded Tubular Products,Austenitic Stainless Steel and Similar Alloys.	OK
ASME SA249 cap.13	13.2 Flattening Test-13.3 Flange Test-13.4 Reverse-Bend Test	OK

RISULTATO DEI TEST ESEGUITI/RESULTS OF MADE TESTS:

We declare that the welding process and the welder has been certified from the Notify Body T.Ü.V. according to the standard EN 15609-1 / EN 15614-1.
CSM Tube spa work with a Quality System certified ISO 9001:2015, approved by DNV (Certificate No. 14694 -2007).
On completation of test, the material meets order requirements and might be used for AD-2000 W2 or PED 2014/68/UE applications.
Note: the frequency of tensile test can be done every 50 pcs., considering the lenght of the tube or equivalent 18 m

DATA/DATE Giovedì 18 Novembre 2021 *WORK INSPECTOR* Luca Grespan

Pos: 1.4 Page: 1/1

CSM TUBE

CSM TUBE spa
Via del Lavoro,60
31013 CIMAVILLA DI CODOGNE' (TV) – ITALY
Phone +39 0438 471100
Fax +39 0438 470606
www.csmtube.com
info@csmtube.com

COMPANY WITH MANAGEMENT SYSTEM CERTIFIED BY DNV GL
= ISO 9001 =
= ISO 14001 =
= OHSAS 18001 =

C.F. / P.IVA IT 02478770262 – REA TV N. 212725 – Reg. Imprese 02478770262 Cap. Soc. Euro 1.000.000,00 i.v.

CERTIFICATO/CERTIFICATE 3.1
NORMA/STANDARD EN 10204
N° 4049/20 26/10/2020

FUNKE
ZUR DESSEL 1
31028 GRONAU (LEINE)
GERMANIA

ÜBERPRÜFT
Von Zeiske , 16:14, 27.10.2020

Att. Responsabile Qualità/Quality Resp.
Fax no. 0049-5182-582-55

DATI GENERALI / GENERAL DATA

D.D.T. 10927 23/10/20 Fatt./Invoice Mt. 8729,60

Ordine/Order	1197599	CSM batch n.	20004364
Yr. item	823 216 907 6 3	Mater./Alloy	1.4571 - TP 316T
		Colata/Heat n.	945113 Finitura/Finishing 2B

Quantità/Quantity (m)	Diametro/Diameter (mm)	Spessore/Thickness (mm)	Pezzi/Pieces	Lunghezza/Lenght (mm)
8729,60	9,50	0,80	1408	6200,00

ANALISI CHIMICA DELLA MATERIA PRIMA / RAW MATERIAL CHEMICAL COMPOSITION

chemical element	Cr	Ni	Mn	Si	Ti	Mo	Fe
reference standard (%)	(16,500-18,500)	(10,500-13,500)	(0,000-2,000)	(0,000-1,000)	(0,100-0,700)	(2,000-2,500)	
measured value (%)	16,560	10,620	1,110	0,480	0,251	2,030	

chemical element	S	Cu	C	P	N	Al	Nb
reference standard (%)	(0,000-0,030)		(0,001-0,080)	(0,000-0,045)			
measured value (%)	0,004		0,020	0,036			

CARATTERISTICHE MECCANICHE MATERIA PRIMA/RAW MATERIAL MECHANICAL PROPERTIES

Carico rottura/Tensile strength	Carico di snervamento/Yield strength		Allungamento/Elongation		Durezza/Hardess (If required)	
Rm (N/mm²)	Rp 0,2% (N/mm²)	Rp 1% (N/mm²)	A (50) %	A (80) %	HV5	HrB
590,00	255,00	276,00		52,00		68,00

MECHANICAL PROPERTIES OF THE TUBE ACCORDING TO UNI EN ISO 6892-1 and ASME SA370.
Tensile tests performed directly in the Tube (lenght of specimen 2"; width of specimen, the diameter itself)

Sample	Carico rottura/Tensile strength	Carico di snervamento/Yield strength		Allungamento/Elongation	Durezza/Hardess (If required)	
	Rm (N/mm²)	Rp 0,2% (N/mm²)	Rp 1% (N/mm²)	A %	HV5	HrB
1	590,12	314,88	346,62	49,00		87,00
2	592,28	310,39	342,82	49,06		88,00
3	605,01	315,44	346,06	49,88		89,00
4	573,77	299,80	321,21	49,01		90,00
5	585,05	312,99	347,23	51,49		85,00
6	589,43	325,33	346,84	55,38		86,00
7	560,53	290,85	314,33	47,98		85,00
8	579,07	308,28	330,94	55,44		90,00
9	574,64	310,06	330,10	49,54		89,00
10	578,43	307,50	329,06	47,41		88,00

CARATTERISTICHE PRODOTTO FINITO/PRODUCT PROPERTIES

Tube heat treated at 1050 °C W2R and cooled in protective atmosphere N2 + H2 : tolerance D4/T3
Welding proc. GTAW (141). Welding Factor V=1. Marking: manifacture''s name, dimensions of tubes, alloy, cast number, batch number, standards, welded

PMI 100% satisfactory

NORMATIVE DI RIFERIMENTO PER IL PRODOTTO FINITO/PRODUCT - STANDARDS

EN 10217-7 TC1	Welded steel tubes for pressure purposes: Technical delivery conditions. Part 7: Stainless steel tubes	OK
EN ISO 10893/1 10893/2	Not destructive testing of steel tubes: Automatic eddy current testing PART 1: for verification of hydraulic leaktightness - PART 2: for the detection of imperfection	OK
EN 8493	Drift expanding test	OK

RISULTATO DEI TEST ESEGUITI/RESULTS OF MADE TESTS:

We declare that the welding process and the welder has been certified from the Notify Body T.Ü.V. according to the standard EN 15609-1 / EN 15614-1.
CSM Tube spa work with a Quality System certified ISO 9001:2015, approved by DNV (Certificate No. 14694 -2007).
On completation of test, the material meets order requirements and might be used for AD-2000 W2 or PED 2014/68/UE applications.
Note: the frequency of tensile test can be done every 50 pcs., considering the lenght of the tube or equivalent 18 m

DATA/DATE Lunedì 26 Ottobre 2020 WORK INSPECTOR Luca Grespan

gattermann
Zukunft formen.

Abnahmeprüfzeugnis - Inspection Certifikate - Certificat de Réception

EN 10204-3.1 **Nr. - No.: 339/21** **Pos: 2 Page: 1/1**

1 von - of 1

Besteller - Customer - Achteur	**Funke Wärmeaustauscher Apparatebau GmbH**	Datum - dated - date	**03.03.2021**
Bestell-Nr.-Order No - Nde la ommande	**1200670**	Lieferschein-Nr. - Delivery note - Bulletin de livraison	**736993.10**
Auftrags-Nr. - Our order no - Notre numéro d'ordre	**663005.20**		
Werkstoff - Material - Matiére	**EN-GJL-200**	Erschmelzungsart - type of production - Art de la production	elektrisch-electrical-electrique
Anforderung - Requirement - Spècifications	**PED 2014/68/EU +A4; AD 2000 - Merkblatt W3/1**	Technische Lieferbedingungen - Technical delivery conditions - conditions techniques de livraison	DIN EN 1561 v. Jan. 2012 / DIN EN 1559

Kennzeichnung - Marking - Marquage

- [x] Werkstoff - Material - Matiére
- [x] Modell-Nr. - Pattern no. No. de Modèle
- [x] Schmelze-Nr. - Heat No. - N°Coulée
- [ ] Gießdatum - Casting date - Moulage-date
- [x] Gießereizeichen - mark of foundry - Marque de fonderie
- [x] Werkssachverständiger - Inspector's stamp - Poincon de l´expert

Pos.-Item-Poste-N°	Stück - Quantity-Quantité	Gewicht kg - Weight - Poids	Gegenstand - Article Designation du produit	Modell-Nr. Besteller Artikel-Nr.	Schmelze Nr.- Heat No. - N° Coulée
10	60	586	Anschlussdeckel 8"-4WEG (GR)	750090303634	182172111
7416600				750 090 303 6 34	

Schmelze Nr.- Heat No. - N° Coulée	C %	Si %	Mn %	P %	S %	Mg %	Cu %	Ti %	Bemerkung - Remark - Remarque
182172111	3,370	2,300	0,473	0,069	0,043	0,001	0,092	0,014	Schmelze: S_210421_09_1

Schmelze Nr.- Heat No. - N° Coulée	Zugversuch nach DIN EN ISO 6892-1 Rm N/mm² RT	Rp 0,2% N/mm² RT	A5 %	Kerbschlagprüfung nach DIN EN ISO 148-1 Kerbschlagwerte - Impact test - Résiiende °C ISO-V / J / KV2 1	2	3	Härte - Hardness- Dureté HB
Sollwerte min.	200						0
182172111	206						192

Schmelze Nr.- Heat No. - N° Coulée	Gefügeuntersuchung - Test of structure - Étude de structure: Ferrit %	Perlit %	Graphitausbildung - Graphite design - Étude de graphite nach - from - à P 441: Graphitform	Sphärolitenanzahl pro	Größe - Dimension	Bemerkung - Remark - Remarque
182172111						

Besonderheiten - speciality - Particularités

Ausführung- design - Exécution
- [ ] bearbeitet - machined - usiné
- [ ] angegossen - integrally cast - intègralement fonte

Sonderprüfungen- special check- speciale chek
- [ ] Ultraschall - ultrasonic tested - ultrasonique-examiné
- [ ] Farbeindringung - Liquid-penetration - de pénètration liquide

checked for Q.C.M
Sign.: Date: 30.04.2021

Es wird bestätigt, daß die Lieferung geprüft, die gestellten Anforderungen erfüllt wurden und den Vereinbarungen bei der Auftragsbestätigung entsprechen.
Tis is to certify that the material has been tested, the requirement are fulfilled and commites with the terms of our confirmation of order.
Co doit certifier que le matériel a été testet, la condition sont fullfilled et des comlies avec les limites de notre confirmation d'ordre.

Sicht- und Maßprüfung ohne Beanstandungen - Visual and measure examination whithout objections - Examen de visuel et de mesure sans objections.
Dieses Zeugnis wurde maschinell erstellt und ist ohne Unterschrift gültig. - This certificate was created by machine and is valid without a signature.

Dassel, den - the	28.04.2021	Töpperwien, Kai	
Ort - Location - Lieu	Datum - Date - Data	Werkssachverständiger - Inspector - L´expert	

dw_prt_ind_wzeugnis

gattermann
Zukunft formen.

Abnahmeprüfzeugnis - Inspection Certifikate - Certificat de Réception

EN 10204-3.1 **Nr. - No.: 12/21** **Pos: 3 Page: 1/1**
1 von - of 1

Besteller - Customer - Achteur	**Funke Wärmeaustauscher Apparatebau GmbH**	Datum - dated - date	**09.11.2020**
Bestell-Nr.-Order No - Nde la ommande	**1198591**	Lieferschein-Nr. - Delivery note - Bulletin de livraison	**736152.10**
Auftrags-Nr. - Our order no - Notre numéro d'ordre	**661696.10**		
Werkstoff - Material - Matiére	**EN-GJL-200** ✓	checked for Q.C.M Sign.: Date: 19.01.2021	Erschmelzungsart - type of production - Art de la production: elektrisch-electrical-electrique
Anforderung - Requirement - Spècifications			Technische Lieferbedingungen - Technical delivery conditions - conditions techniques de livraison ✓ DIN EN 1561 v. Jan. 2012 / DIN EN 1559

Kennzeichnung - Marking - Marquage

- [x] Werkstoff - Material - Matiére
- [x] Modell-Nr. - Pattern no. No. de Modèle
- [x] Schmelze-Nr. - Heat No. - N°Coulée
- [ ] Gießdatum - Casting date - Moulage-date
- [x] Gießereizeichen - mark of foundry - Marque de fonderie
- [x] Werkssachverständiger - Inspector's stamp - Poincon de l´expert

Pos.-Item-Poste-N°	Stück - Quantity-Quantité	Gewicht kg - Weight - Poids	Gegenstand - Article Designation du produit	Modell-Nr. Besteller Artikel-Nr.	Schmelze Nr.- Heat No. - N° Coulée
10	68	422	Umlenkdeckel 8"-4Weg (GR) ✓	750090304634	178505345
7568900				750 090 304 6 34 ✓	

Schmelze Nr.- Heat No. - N° Coulée	C %	Si %	Mn %	P %	S %	Mg %	Cu %	Ti %	Bemerkung - Remark - Remarque
178505345	3,390	2,010	0,471	0,061	0,067	0,001	0,079	0,015	Schmelze: S_201210_09_1

Schmelze Nr.- Heat No. - N° Coulée	Zugversuch nach DIN EN ISO 6892-1 Rm N/mm² RT	Rp 0,2% N/mm² RT	A5 %	Kerbschlagprüfung nach DIN EN ISO 148-1 Kerbschlagwerte - Impact test - Résiiende °C ISO-V / J / KV2 1	2	3	Härte - Hardness- Dureté HB
Sollwerte min.	200						0
178505345 ✓	224						187

Schmelze Nr.- Heat No. - N° Coulée	Gefügeuntersuchung - Test of structure - Étude de structure: Ferrit %	Perlit %	Graphitausbildung - Graphite design - Étude de graphite nach - from - à P 441: Graphitform	Sphärolitenanzahl pro	Größe - Dimension	Bemerkung - Remark - Remarque
178505345						

Besonderheiten - speciality - Particularités

Ausführung- design - Exécution
- [ ] bearbeitet - machined - usiné
- [ ] angegossen - integrally cast - intègralement fonte

Sonderprüfungen- special check- speciale chek
- [ ] Ultraschall - ultrasonic tested - ultrasonique-examiné
- [ ] Farbeindringung - Liquid-penetration - de pénètration liquide

Es wird bestätigt, daß die Lieferung geprüft, die gestellten Anforderungen erfüllt wurden und den Vereinbarungen bei der Auftragsbestätigung entsprechen.
Tis is to certify that the material has been tested, the requirement are fulfilled and commites with the terms of our confirmation of order.
Co doit certifier que le matériel a été testet, la condition sont fullfilled et des comlies avec les limites de notre confirmation d'ordre.

Sicht- und Maßprüfung ohne Beanstandungen - Visual and measure examination whithout objections - Examen de visuel et de mesure sans objections.
Dieses Zeugnis wurde maschinell erstellt und ist ohne Unterschrift gültig. - This certificate was created by machine and is valid without a signature.

Dassel, den - the	11.01.2021	Töpperwien, Kai
Ort - Location - Lieu	Datum - Date - Data	Werkssachverständiger - Inspector - L´expert

dw_prt_ind_wzeugnis

A.1.5 Test certificate

FUNKE
Funke Wärmeaustauscher Apparatebau GmbH
Zur Dessel 1, D-31028 Gronau (Leine)

Druckprobenbescheinigung
Pressuretest Certificate

Hersteller: Producer:	FUNKE Wärmeaustauscher Apparatebau GmbH		
Objekt: Object:	Wärmeaustauscher BCF 806-0-B15-4 Heat Exchanger BCF 806-0-B15-4	**Anzahl:** No. of Units	5
Geräte-Nr.: Unit-No.	0989679-0989683	**Baujahr:** Year of Manuf.	2022
Kunde: Customer:	Emmerthaler Apparatebau GmbH D-31860 Emmerthal-Kirchohsen	**Zeichnungsnr.:** Drawing-No.	750 800 154 0
Bestell-Nr.: Order-No.	BST2200043/0	**Projekt-No.:** Project-No.	3 391 790
Herstellervorschrift: Designcode:	DGRL (PED) 2014/68/EU, Herstellerstandard		

Auslegungs- und Prüfdaten: Design and Test Dates:		**Mantelraum** Shellside	**Rohrraum** Tubeside
zul. max. Betriebsdruck Allowable Design Pressure max	bar	16.00	10.00
zul. min. Betriebsdruck Allowable Design Pressure min	bar	-1.00	-1.00
zul. max. Betriebstemperatur Allowable Design Temperature max.	°C	150.0	150.0
zul. min. Betriebstemperatur Allowable Design Temperature min.	°C	-10.0	-10.0
Inhalt Volume	L	30.68	21.72
Prüfdruck Test-Pressure	bar	25.50	16.50
Testmedium: Testmedium:		Stickstoff Nitrogen	Stickstoff Nitrogen
Druckhaltezeit: Holding Time:		30 Minuten 30 Minutes	

Prüfmanometer: Testmanometer	TP 146-1 / TP 41-1	**Prüfdatum:** Date of Test	31.03.22

Hierdurch wird die ordnungsgemäße Durchführung der Druckprobe bescheinigt. Während der Haltezeit ergab die Sichtprüfung keinerlei Undichtigkeit, und der Druck blieb während der Prüfdauer konstant.
Herewith we certify the orderly execution of the pressure test. During the pressure holding time the inspection did not show any leakages and during the whole time the testpressure was constant.

Gronau (Leine), den 31.03.22

i. V.
QS-Qualitätskontrolle/ QS-Qualitycontrol

A.2 Duplex filter

Name	Data
Designation	Duplex filter
Type	DU 251.25G.30.-FS.8.-.-.-
Number	
Type of manual	*Technical documentation*
Manufacturer	Eaton Technologies GmbH

A.2.1 Operating instructions

PRESSURE FILTER, change over

Sheet No. 2117 Z

Series DU 251-401
DN50 PN32

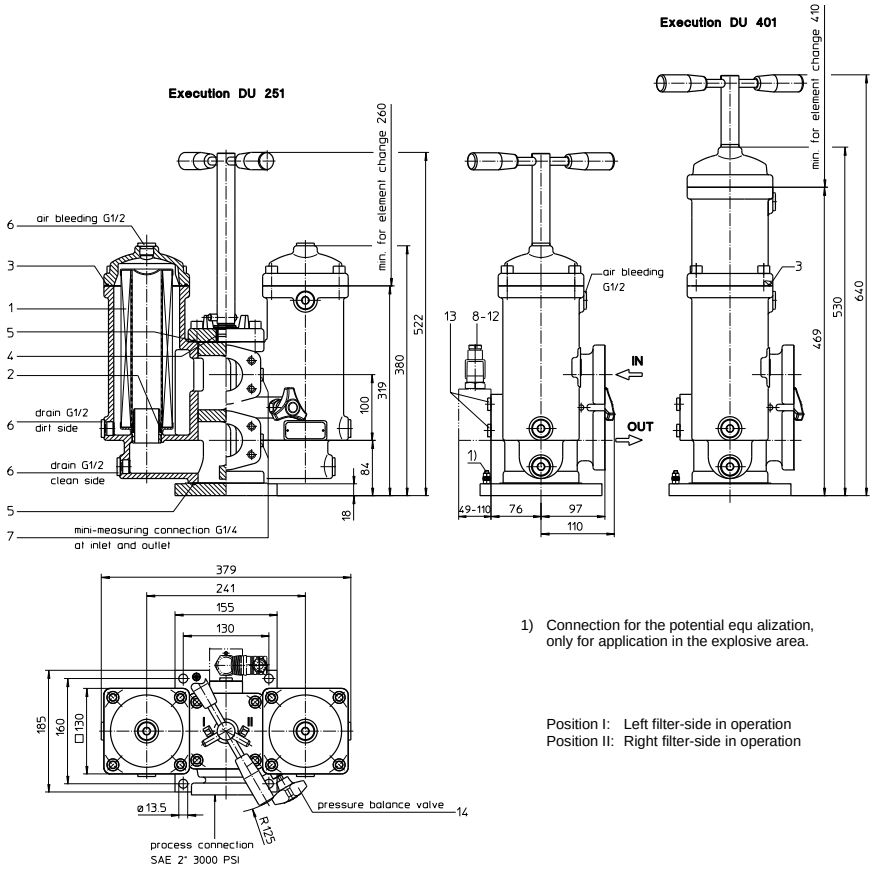

1) Connection for the potential equ alization, only for application in the explosive area.

Position I: Left filter-side in operation
Position II: Right filter-side in operation

Weight DU251: approx. 39 kg
Weight DU401: approx. 49 kg

Dimensions: mm

Designs and performance values are subject to change.

EATON
Powering Business Worldwide

EDV 02/20

Pressure Filter, change over Series DU 251-401 DN50 PN32

Description:

Pressure filter changeover series DU 251-401 have a working pressure up to 32 bar. Pressure peaks can be absorbed with a sufficient safety margin.

A three-way-change-over valve which is integrated in the middle of the housing makes it possible to switch from the dirty filter-side to the clean filter-side without interrupting operation. These filters can be installed as suction filters.

The filter element consists of star-shaped, pleated filter material, which is supported on the inside by a perforated core tube and is bonded to the end caps with a high-quality adhesive. The flow direction is from outside to inside.

For cleaning the stainless steel mesh element (see special leaflets 21070-4 and 39448-4) or changing the filter element, remove the cover and take out the element. The mesh elements are not guaranteed to maintain 100% performance after cleaning.

For filtration finer than 40 m, use the disposable elements made of microglass. Filter elements as fine as 5 m(c) are available; finer filter elements are available upon request.

Eaton filter elements are known for a high intrinsic stability and an excellent filtration capability, a high dirt-retaining capacity and a long service life.

Eaton filter can be used for petroleum-based fluids, HW emulsions, water glycols, most synthetic fluids and lubrication fluids. Consult factory for specific fluid applications.

Ship classifications available upon request.

Type index:

Complete filter: (ordering example)

DU.	251.	10VG.	30.	E.	P.	-.	FS.	8.	-.	-.	-.	AE
1	2	3	4	5	6	7	8	9	10	11	12	13

1 **series:**
DU = pressure filter, change over

2 **nominal size:** 251, 401

3 **filter-material:**
130G, 80G, 40G, 25G stainless steel wire mesh
25VG, 16VG, 10VG, 6VG, 3VG microglass
25API, 10API microglass according to API
10P paper

4 **filter element collapse rating:**
30 = Δp 30 bar

5 **filter element design:**
E = single end open
S0,3 = with bypass valve Δp 0,3 bar
S = with bypass valve Δp 2,0 bar
S1 = with bypass valve Δp 3,5 bar

6 **sealing material:**
P = Nitrile (NBR)
V = Viton (FPM)

7 **filter element specification:**
- = standard
VA = stainless steel
IS06 = for HFC application, see sheet-no. 31601

8 **process connection:**:
FS = SAE-flange connection 3000 PSI

9 **process connection size:**
8 = 2 (standard)
7 = 1 (with counter flange BFS.8.A.48,3x3,7.ST.P.3000)

10 **filter housing specification:**
- = standard
IS12 = internal parts of change over armature stainless steel, see sheet-no. 41028

11 **pressure vessel specification:**
- = standard (PED 2014/68/EU)
IS20 = ASME VIII Div.1 with ASME equivalent material, see sheet-no. 55217 (max. operating pressure 16 bar)
IS14 = calculation pressure vessel parts acc. to EN 13445, see sheet-no. 69828 (max. operating pressure 10 bar)
IS63 = for operating pressure to 63 bar, see sheet-no. 68796

12 **internal valve:**
- = without

13 **clogging indicator or clogging sensor:**
- = without
AOR = visual, see sheet-no.1606
AOC = visual, see sheet-no.1606
AE = visual-electric, see sheet-no.1609
OP = visual, see sheet-no.1628
OE = visual-electric, see sheet-no.1628
VS5 = electronic, see sheet-no.1641

To add an indicator/sensor to your filter, use the corresponding indicator data sheet to find the indicator details and add them to the filter assembly model code.

Filter element: (ordering example)

01NL.	250.	10VG.	30.	E.	P.	-
1	2	3	4	5	6	7

1 **series:**
01NL = standard filter element according to DIN 24550, T3

2 **nominal size:** 250, 400

3 - 7 see type index complete filter

Accessories:

- gauge port and bleeder connection, see sheet-no. 1650
- drain- and bleeder connection, see sheet-no. 1651 resp. 1659
- SAE-counter flanges, see sheet-no. 1652
- shut-off valve, see sheet-no. 1655

Technical data:

operating temperature:	-10°C to +100°C
operating medium:	mineral oil, other media on request
max. operating pressure:	32 bar
test pressure:	64 bar
max. operating pressure with IS20:	16 bar
test pressure with IS20:	32 bar
max. operating pressure with IS14:	10 bar
test pressure with IS14:	20 bar
max. operating pressure with IS63:	63 bar
test pressure with IS63:	126 bar
process connection:	SAE-flange connection 3000 PSI
housing material:	EN-GJS-400-18-LT
sealing material:	Nitrile (NBR) or Viton (FPM), other materials on request
installation position:	vertical
measuring connections:	G ¼
drain- and bleeder connections:	G ½
volume tank DU251:	2x 2,5 l
DU401:	2x 3,7 l

Classified under the Pressure Equipment Directive 2014/68/EU for mineral oil (fluid group 2), Article 4, Para. 3.
Classified under ATEX Directive 2014/34/EU according to specific application (see questionnaire sheet-no. 34279-4).

Pressure drop flow curves:

Filter calculation/sizing

The pressure drop of the assembly at a given flow rate Q is the sum of the housing p and the element p and is calculated as follows:

$\Delta p_{assembly} = \Delta p_{housing} + \Delta p_{element}$
$\Delta p_{housing}$ = (see $\Delta p = f(Q)$ - characteristics)

$$\Delta p_{Element}\,(mbar) = Q\left(\frac{l}{min}\right) x\ \frac{MSK}{10}\left(\frac{mbar}{l/min}\right) x\ \nu\left(\frac{mm^2}{s}\right) x\ \frac{p}{0{,}876}\left(\frac{kg}{dm^3}\right)$$

For ease of calculation our Filter Selection tool is available online at www.eaton.com/hydraulic-filter-evaluation

Material gradient coefficients (MSK) for filter elements

The material gradient coefficients in mbar/(l/min) apply to mineral oil (HLP) with a density of 0,876 kg/dm³ and a kinematic viscosity of 30 mm²/s (139 SUS). The pressure drop changes proportionally to the change in kinematic viscosity and density.

DU	VG					G				P	API	
	3VG	6VG	10VG	16VG	25VG	25G	40G	80G	130G	10P	10API	25API
251	0,931	0,646	0,414	0,360	0,246	0,0277	0,0258	0,0177	0,0131	0,189	0,212	0,097
401	0,571	0,397	0,254	0,221	0,151	0,0169	0,0158	0,0108	0,0080	0,099	0,130	0,059

Δp = f(Q) – characteristics according to ISO 3968

The pressure drop characteristics apply to mineral oil (HLP) with a density of 0,876 kg/dm³. The pressure drop changes proportionally to the density.

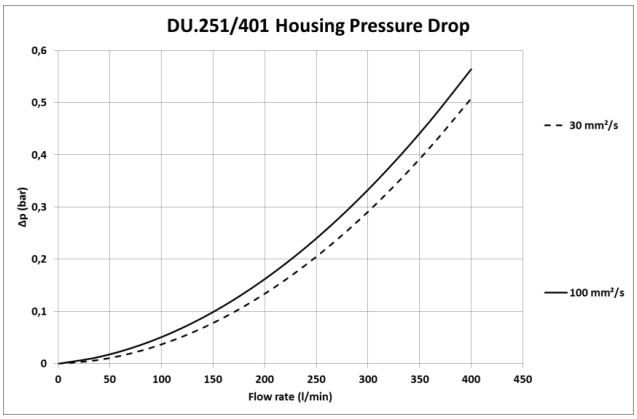

Symbols:

without indicator

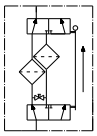

with electric indicator AE 30 and AE 40

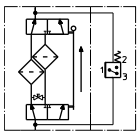

with visual-electric indicator AE 50 and AE 62

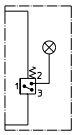

with visual-electric indicator AE 70 and AE 80

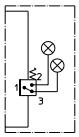

with visual indicator AOR/AOC/OP

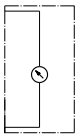

with visual-electric indicator OE

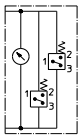

with electronic sensor VS5

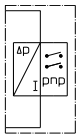

Spare parts:

item	qty.	designation	dimension DU 251	dimension DU 401	article-no.	
1	2	filter element	01NL250	01NL.400		
2	2	O-ring	40 x 3		304389 (NBR)	304391 (FPM)
3	2	O-ring (DU251)	115 x 3		303963 (NBR)	307762 (FPM)
	4	O-ring (DU401)	115 x 3		303963 (NBR)	307762 (FPM)
4	1	O-ring	24 x 3		303038 (NBR)	304397 (FPM)
5	2	O-ring	95 x 3		305808 (NBR)	304828 (FPM)
6	8	screw plug (DU251)	G ½		304678	
	10	screw plug (DU401)	G ½		304678	
7	2	screw plug	G ¼		305003	
8	1	clogging indicator, visual	AOR or AOC		see sheet-no. 1606	
9	1	clogging indicator, visual	OP		see sheet-no. 1628	
10	1	clogging indicator, visual-electric	OE		see sheet-no. 1628	
11	1	clogging indicator, visual-electric	AE		see sheet-no. 1609	
12	1	clogging sensor, electronic	VS5		see sheet-no. 1641	
13	2	screw plug	G ¼		305003	
14	1	pressure balance valve	DN10		305000	

item 13 execution only without clogging indicator or clogging sensor

Test methods:

Filter elements are tested according to the following ISO standards:

ISO 2941	Verification of collapse/burst resistance
ISO 2942	Verification of fabrication integrity
ISO 2943	Verification of material compatibility with fluids
ISO 3723	Method for end load test
ISO 3724	Verification of flow fatigue characteristics
ISO 3968	Evaluation of pressure drop versus flow characteristics
ISO 16889	Multi-pass method for evaluating filtration performance

North America
44 Apple Street
Tinton Falls, NJ 07724
Toll Free: 800 656-3344
(North America only)
Tel: +1 732 212-4700

Greater China
No. 7, Lane 280,
Linhong Road
Changning District, 200335
Shanghai, P.R. China
Tel: +86 21 5200-0099

Europe/Africa/Middle East
Auf der Heide 2
53947 Nettersheim, Germany
Tel: +49 2486 809-0

Friedensstraße 41
68804 Altlußheim, Germany
Tel: +49 6205 2094-0

An den Nahewiesen 24
55450 Langenlonsheim, Germany
Tel: +49 6704 204-0

Asia-Pacific
100G Pasir Panjang Road
#07-08 Interlocal Centre
Singapore 118523
Tel: +65 6825-1668

For more information, please email us at *filtration@eaton.com* or visit *www.eaton.com/filtration*

© 2021 Eaton. All rights reserved. All trademarks and registered trademarks are the property of their respective owners. All information and recommendations appearing in this brochure concerning the use of products described herein are based on tests believed to be reliable. However, it is the user's responsibility to determine the suitability for his own use of such products. Since the actual use by others is beyond our control, no guarantee, expressed or implied, is made by Eaton as to the effects of such use or the results to be obtained. Eaton assumes no liability arising out of the use by others of such products. Nor is the information herein to be construed as absolutely complete, since additional information may be necessary or desirable when particular or exceptional conditions or circumstances exist or because of applicable laws or government regulations.

Powering Business Worldwide

Manual and maintenance instructions

for Eaton-duplex filters, change over
DU 63, 101, 251, 401, 631, 635, 1001, 1950, 1050, 2050, related specifications

Sheet No.
20320-4E
Page 1/3

This manual is effective for all filters of the type DU 63, 101, 251, 401, 631, 635, 1001, 1950, 1050, 2050 and related specifications. It contains certain requirements and instructions which ensure unobjectionable operation of the filter. It can be completed with specific additional instructions by the operator himself if necessary.

1. Safety instructions

- Prior to operating the filter, manual and maintenance instructions have to be read carefully.
- Follow the instructions of this manual under any circumstances!
- The manufacturer does not assume liability for any damage, which occurs due to disregarding these instructions.
- If operations are carried out differently, the safety of the pressurized device can not be assured!
- Operating conditions given in the data sheet, especially excess pressure, temperature range and operating fluid, have to be followed unconditionally. Variation of these parameters can cause damage to important pressure holding parts and sealing. Also take in consideration the compatibility of filter components with the operating fluid.
- Under working conditions the filter housing is pressurized. Do not try to loosen or remove any part of the filter or the filter housing during operation. The operating fluid could escape at high pressure and high temperatures.
  This does not apply for parts of the decompressed or the turned off side of the filter (see „Maintenance“).
- Leaking operating fluid always bears the danger of injuries and burns!
- Do not open the filter housing until you made sure it is not pressurized any more!
- Touching parts of the filter may cause burning, depending on the operating temperature.
- When exchanging the filter keep in mind that it might have operating temperature. Danger of burning!
- Always wear safety goggles and gloves when working on the filter!
- If you come into contact with the operating fluid please follow the instructions of the fluid manufacturer!!
- Only use original spare parts.

For filters being used in hazardous locations the Eaton documentation N° 41269 "Supplementation of the Operating Manual for the use of filters in potential explosive areas.

2. Installation

Note safety instructions!

When removing a new filter from its box it is ready for installation. It is placed on a level area and attached (DU 63) or screwed (DU 101-2050) to it.
Afterwards remove protective caps from connections and connect those to the present pipe work.

Appropriate pipe work (pipes, hoses) ensures that drain and air-bleed valves are connected to proper containers. For these purposes original Eaton drain and air-bleed valves can be used.

When installing the filter please make sure, that:
- sufficient fixation of the filter is assured
- the clogging indicator is accessible and can be checked easily.
- the connections for draining, air-bleeding and pressure measurements can be accessed easily.
- there is enough room above the filter to remove and replace elements.
- no dirt, particles, other contamination or fluids enter the filter.
- both inlet and outlet of the filter are connected to the pipe work correctly.
- counterflanges or screw joints of the pipe system and the filter have to be angled precisely and connected that same way (if counterflanges or pipe joints are canted or under tension switching filters can be aggravated and it might harm pressure tightness)

Fitting the counterflanges for DU 101-2050

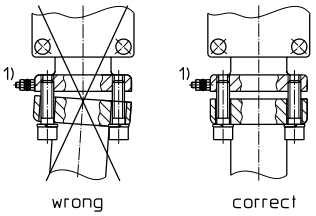

1) Connection for the potential equalization, only for application in the explosive area

- the following torques have to be applied when fastening the counterflanges

Type	DU 63*	DU 101		DU 251		DU 401	DU 631/635	DU 1001/1950	DU 1050/2050
Connection	¾“	1“	1 ¼“	1 ½“	2“	2“	2 ½“	3“	4“
Moment [Nm]	100 ±15	10 ±2	12,5 ±3	25 ±5	28 ±6	28 ±6	40 ±8	71 ±15	100 ±25

- sufficient measures were taken to prevent corrosion.
- the filter is protected from other mechanical influences (such as impacts and hits).

EDV 08/12 - Englisch

EATON Powering Business Worldwide
Friedensstrasse 41, 68804 Altlussheim, Germany
phone +49 (0)6205 2094-0 e-mail filtration@eaton.com
fax +49 (0)6205 2094-40 url www.eaton.com/filtration

Manual and maintenance instructions

for Eaton-duplex filters, change over
DU 63, 101, 251, 401, 631, 635, 1001, 1950, 1050, 2050, related specifications

Sheet No.
20320-4E
Page 2/3

3. Initial operation

3.1 Prior to initial operation

Prior to the initial operation of the system or the machine, which means prior to filling in any fluid, check the internal condition of the filter. Proceed as follows:

- Open the filter housing by removing the lit. Check the cleanness of the housing, the presence of an element, the sealing, etc..
- Close the housing tight.

3.2 Filling and air-bleeding

Prior to the initial operation, the filter has to air-bleed as follows:

- Turn the switch of the filter to the middle position. The lever of the DU 63/635/1050/2050 is right in the middle between the two stops. The stop-pin of the DU 101-1950 also is positioned right between the two stops.
- Fill both sides of the filter using the regular operating fluid flow.
- Open the locking screws on the side of the top edge of the filter (DU 63) or on top the filter lit (DU 101-2050). Wait until it leaks fluid without any bubbles and there is no more sound of air escaping.
- afterwards tighten the locking screws again.

After this process you can direct the flow of the fluid, which is supposed to be filtered, to pass through either side of the filter. This is done simply by turning the lever or the switch. To recognize which side is operating at the moment, just note the following:

DU 101/251/401/631/1001/1950: The stop-pin of the switch is pointing at the side which is operating at the moment.
DU 63/635/1050/2050: The lever itself points at the side which is operating at the moment.

the illustration corresponds to DU 101/251/401/631/1001/1950

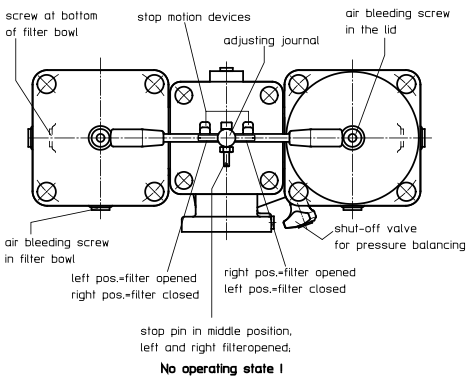

the illustration corresponds to DU 635/1050/2050

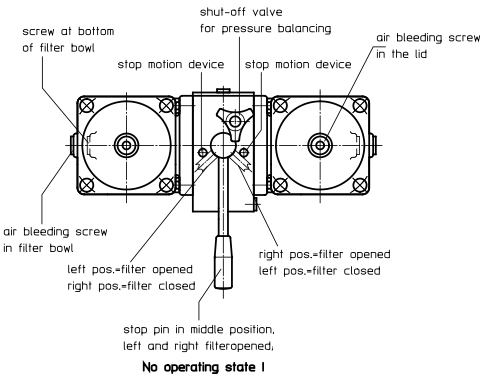

the illustration corresponds to DU 63

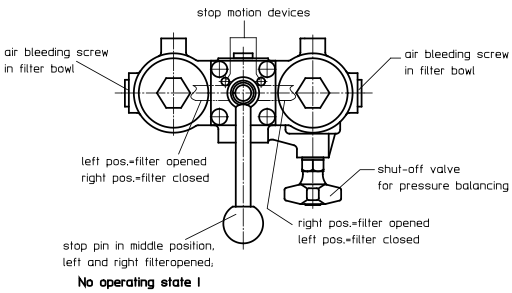

EDV 08/12 - Englisch

EATON Powering Business Worldwide

Friedensstrasse 41, 68804 Altlussheim, Germany
phone +49 (0)6205 2094-0 e-mail filtration@eaton.com
fax +49 (0)6205 2094-40 url www.eaton.com/filtration

Manual and maintenance instructions

for Eaton-duplex filters, change over
DU 63, 101, 251, 401, 631, 635, 1001, 1950, 1050, 2050, related specifications

Sheet No.
20320-4E
Page 3/3

4. Maintenance / Inspection

Also please note all particular site-related instructions for inspection.

Using filters equipped with clogging indicators it is necessary to exchange or clean the element if the signal "Clogged filter" is emitted (also note the data sheet or the instructions of the clogging indicators).
Contaminated elements have to be replaced as soon as possible! If a clogged element is not removed it may cause severe damage to the entire system!

Attention!

Always exchange elements with sealing. If a cleaned metal mesh element type „G" is reused replace its sealing. The exact markings can be found in spare part lists for each element.

4.1 Replacing the filter element

Maintenance or the exchange of contaminated filter elements has to be performed as follows:

- Open the shut-off valve for pressure equalization.
- Switch the filter to the opposite side.
- Close the shut-off valve.
- Open the air-bleed valve of the discharged side of the housing in order to equalize the pressure with the surrounding atmosphere.
- Open the drain-valves to drain the filter
- Open the lit of the discharged side of the filter housing.
- Loosen and remove the element by light swaying and pulling.
- If necessary cover or close the adaptor end inside the housing and clean the entire inside.
- Close the drain valve and remove the cover of the adaptor end if present.
- Check the sealing of the filter lit and replace the O-ring if necessary.
- Take the replacing element, make sure the serial number matches the number of the old element, and insert it into the housing (prior check if the elements sealing are undamaged and tighten them)
- Close the filter with it's lit.
- finally perform the steps described in 3.2 "Filling and air-bleeding"

4.2 Cleaning the filter element

Filter elements with filter materials such as glass fibre (VG) or paper (P) are not cleanable. They have to be replaced after the dirt retention capacity has been reached. Filter elements with filter materials such a wire mesh (G) are cleanable and could be used again. The cleaning of the filter elements has to be carried out according to the cleaning specification for Eaton-Filter elements (metal), sheet-no. 21070-4 and 39448-4.
When removing and reinserting the element please proceed as described in 4.1 "Replacing the filter element".

The maintained side of the filter is now ready to operate at full strain again.
In addition to that it is possible to maintain or replace the clogging indicator if necessary. Both the DU 101 and the DU 251 separate this device from the pressurized system when it's switch is brought into the middle position.

Attention!

Independent from a necessary change of the element, the switching armature has to be actuated at least once per three weeks in order to maintain full operability.

5. Additional information

In addition to the regular clogging indication, the pressure drop, which is evidence for contamination, can be monitored and checked. On filters DU 101-2050 certain miniature measuring devices with a G ¼ A inside thread can be connected to the flanges. For this purpose it is necessary to install measuring connections with M16 screw joints.

6. Service

The service will be performed by

EATON Technologies GmbH
Friedensstr. 41
D-68804 Altlussheim
Germany

phone: +49 (0)6205-2094-0
fax: +49 (0)6205-2094-40

Special questions about the operation of the filter will also be answered within this area.
Spare parts respectively wearing parts have to be ordered according to the spare part list of the filter-data-sheet.

EDV 08/12 - Englisch

EATON Powering Business Worldwide

Friedensstrasse 41, 68804 Altlussheim, Germany
phone +49 (0)6205 2094-0 e-mail filtration@eaton.com
fax +49 (0)6205 2094-40 url www.eaton.com/filtration

A.2.2 Test documentation

EATON Powering Business Worldwide

Bescheinigung für Druckbehälter nach DGRL 2014/68/EU Art.4; Abs.3
Certificate for pressure vessels according to PED 2014/68/EU art.4; para.3
Certificat d'accumulateurs de pression selon PED 2014/68/EU art.4; para.3
Certificado para depositos de presión según PED 2014/68/EU art.4; párrafo 3

Erstellt von/am:
Abt.QS/01.12.95
Geändert von/am:
QS/Ohlau/28.06.16

Hersteller : **Eaton Technologies GmbH**
Manufacturer
Fabricant
Fabricante
D-68804 Altlussheim Tel.: +49 (0) 6205/2094-0

Kunde : **Emmerthaler Apparatebau GmbH**
Customer
Client
Cliente

Teile - Nr. : **305734**
Part no.
Numéro d' article
Pieza no.

Kunden - Nr. : **102384**
Customer no.
Numéro de client
Cliente no.

Bestell - Nr. : **BST2200112/0 L712184**
Customer order no.
Ref. de commande du client
Pedido no.

Hiermit bescheinigen wir, dass diese(r) Druckbehälter
Herewith we certify that the following pressure vessel(s)
Nous certifions que cet/ces accumulateur(s) de pression
Se certifica que este/estos depósito(s) de presión

Fabrik - / Auftrags - Nr. : **425906-1 (1/6)-(6/6)**
serial no.
numéro d'usine
no. del fabricación

Zchn. / Maßblatt - Nr. : **2117**
drawing / data sheet no.
dessin / fiche tech. no.
plano / hoja no.

Baujahr : **2022**
year of construction
année de construction
año de construcción

Zul. Betriebsüberdruck : **32** **bar**
max. working pressure
maxi. pression de service
sobrepresión de servicio admisible

Zul. Betriebstemperatur : **-10 up to +100** **°C**
max. working temperature
maxi. température de service
temperatura de servicio admisible

Inhalt : **2x2,5** **Liter**/Litre/Litros/Litros
volume
capacité
capacidat

Medium : **Hydrauliköl**
medium — hydraulic oil
médium — huile d'hydraulique
medio — aceide hidráulico

Stückzahl / Typ : **6** **x** **DU 251.25G.30.E.P.-.FS.8.-.-.-.-**
quantity / type
quantité / type
candidad / tipo

gem. DGRL 2014/68/EU Art.4; Abs.3 hergestellt und einer Flüssigkeits- / Gasdruckprüfung mit einem Prüfdruck von
is/are manufactured acc. to PED 2014/68/EU art.4; para.3 and subjected to a fluid-pressure/gas-pressure test with a test pressure of
était/étaient produit selon PED 2014/68/EU art.4; para.3 et soumis á une épreuve de pression de liquide/gaz avec une pression d' essai du
ha(n) sido fabricado según PED 2014/68/EU art.4; párrafo 3 y se sometió/sometieron a un control de liquido/presión de gas con una presión de verificación de

64 bar **unterzogen wurde(n).**

Die Druckprüfung ergab keine Beanstandung.
The pressure testing was performed without objection.
L' épreuve de pression ne donnait pas lieu á aucune objection.
El resultado de la verificación de presión no ha arroiado reclamación alunga.

Eaton Technologies GmbH
Filtration Division
Altlussheim Branch
Friedensstrasse 41
68804 Altlussheim, Germany
Phone +49 (0) 6205/2094-0
Fax +49 (0) 6205/2094-40

Altlussheim, 04.04.22
Datum Date/Date/Fecha

Hersteller Manufacturer/Fabricant/Fabricante

EatonTechnologies GmbH
D-68804 ALTLUSSHEIM Telefon +49 (0) 62 05 / 20 94 - 0 Fax +49 (0) 62 05 / 20 94 - 40 Internet: www.eaton.com/filtration

EATON
Powering Business Worldwide

Werkszeugnis nach EN 10204 - 2.2
Test certificate according to EN 10204 - 2.2
Relevé de contrôle selon la norme EN 10204 - 2.2
Certificado de prueba referente a la EN 10204 - 2.2

Erstellt von/am:
Abt.QS/01.12.95
Geändert von/am:
QS/Ohlau/01.06.13

Hersteller : **Eaton Technologies GmbH**
Manufacturer D-68804 Altlussheim Tel.: +49 (0) 6205/2094-0
Fabricant
Fabricante

Kunde : **Emmerthaler**
Customer **Apparatebau GmbH**
Client
Cliente

Teile - Nr. : **305734**
Part no.
Numéro d' article
Pieza no.

Kunden - Nr. : **102384**
Customer no.
Numéro de client
Cliente no.

Auftrags - Nr. : **425906-1 (1/6)-(6/6)**
Serial no.
Numéro d' ordre
No. del fabricación

Bestell - Nr. : **BST2200112/0**
Customer order no. **L712184**
Numéro de commande
Pedido no.

Technische Daten / Technical Data / Donneés techniques / Datos Tecnicos

Filtertyp : **6 x DU 251.25G.30.E.P.-.FS.8.-.-.-.-**
Filter type
Type de filtre
Tipo filtro

Maßblatt - Nr. : **2117**
Data sheet no.
Fiche technique no.
Hoja no.

Max. Betriebsüberdruck : **32** bar
Max. operating pressure
Pression de service maxi.
Sobrepresión máx. de servicio

Baujahr : **2022**
Year of construction
Année de fabrication
Año construccion

Prüfüberdruck : **64** bar
Test pressure
Pression d'essai
Prueba de sobrepresión

Temperatur : **-10 up to +100** °C
Temperature
Température
Temperatura

Hiermit wird bescheinigt, daß das Filter der Type 6 x DU 251.25G.30.E.P.-.FS.8.-.-.-.-
Herewith we certify that the type of filter / Avec cela nous certifions que le filtre de type / Certificamos que el filtro del tipo
einer ständigen Fertigungs- und Qualitätskontrolle unterliegt. Nach Fertigstellung werden die Filter einer Endkontrolle unterzogen.
is permanently submitted to a control of manufacturing and quality. After manufacturing the filter passes a final control.
est soumis au contrôle de fabrication et qualité.
Après l'achèvement nous avons un contrôle final pour tous les filtres.
está sometido a un control constande de fabricación y de calidad. Una vez fabricado el filtro, se le somete a un control de calidad final.

Folgende Materialien wurden verwendet: / The following materials were used / Désignations des matières utilisées / Se emplearon los siguintes materiales

Benennung : Designation / Désignation / Denominación	**Material** : Material / Matière / Material
Filterdeckel / filter cover / couvercle du filtre / tapa filtro	EN-GJS-400-18-LT
Filtergehäuse / filter housing / corps du filtre / carcasa filtro	EN-GJS-400-18-LT
Filterboden / filter bottom / fond du filtre / fondo del filtro	---
Filteroberteil / filter head / tête du filtre / cabeza filtro	---
Filtertopf / filter bowl / pot du filtre / pote de filtro	---
Kükengehäuse / switching housing / carapace de basculement/carcasa macho grifo	---
Kükendeckel / switching cover / couvercle de basculement / tapa macho grifo	EN-GJS-400-18-LT
Kükenboden / switching bottom / fond de basculement / fondo macho grifo	S355J2+N
Küken / switching / basculement / macho grifo	EN-GJS-400-18-LT
Schaltwelle / selector shaft / arbre de couplage / planca de eje	---
Blindflansch / blank flange / flasque non perforé / brida ciega	---
Verschlußschraube / screw plug / vis de fermeture / tornillo cierre	5.6
O-Ring / O-ring / joint torique / junta tórica	Perbunan (NBR)
Flachdichtung / flat gasket / garniture plate / junta plana	---

Eaton Technologies GmbH
Filtration Division
Altlussheim Branch
Friedrichstrasse 1
68804 Altlussheim, Germany
Phone +49 (0) 62[illegible]4-0
Fax +49 (0) 62[illegible]4-40

Hersteller
manufacturer / fabricant / fabricante
04.04.22

EatonTechnologies GmbH
D-68804 ALTLUSSHEIM Telefon +49 (0) 62 05 / 20 94 - 0 Fax +49 (0) 62 05 / 20 94 - 40 Internet: www.eaton.com/filtration

A.3 Gear pump unit

A.3.1 Gear pump

Name	Data
Designation	Gear pump
Type	KF 3-6
Number	
Type of manual	*Technical documentation*
Manufacturer	Kracht GmbH

TAG No. AERZEN	Link
3.2.2.x31	

A.3.1.1 Operating instructions

KRACHT

D.0024860001

Betriebsanleitung (Original)
Operating instructions (Translation)

Zahnradpumpe KF 3/. - KF 6/.
D.0024860100-15
Deutsch
Gear pump KF 3/. - KF 6/.
D.0024860002-15
English

15 • 17.12.2021

Inhaltsverzeichnis

1 Allgemein ... 5
1.1 Zur Dokumentation ... 5
1.2 Herstelleradresse ... 5
1.3 Mitgeltende Dokumente ... 5
1.4 Symbolik ... 6
2 Sicherheit ... 7
2.1 Bestimmungsgemäßer Gebrauch ... 7
2.2 Personenqualifikation ... 7
2.3 Grundsätzliche Sicherheitshinweise ... 8
2.4 Grundsätzliche Gefahren ... 9
3 Gerätebeschreibung ... 11
3.1 Funktionsprinzip ... 11
3.2 Ausführungsvarianten ... 12
3.3 Typenschlüssel ... 14
3.4 Dreh- und Förderrichtung ... 17
3.5 Dichtungsarten ... 18
3.6 Flüssigkeitsvorlage ... 21
3.7 Sondernummern ... 22
3.8 Wellenenden ... 25
4 Technische Daten ... 27
4.1 Allgemein ... 27
4.2 Nenngröße ... 28
4.3 Zuordnung Viskosität - Drehzahl ... 29
4.4 Zulässige Drücke ... 29
4.4.1 Betriebsdruck Saugseite ... 29
4.4.2 Betriebsdruck Druckseite ... 30
4.4.3 Betriebsdruck Saug- und Druckseite ... 31
4.5 Zuordnung Differenzdruck - Viskosität ... 32
4.6 Zulässige Temperaturen ... 32
4.7 Werkstoffangaben ... 34
4.7.1 Kompressoranwendung ... 35
4.8 Gewicht ... 36
4.9 Abmessungen ... 36
5 Transport und Lagerung ... 37
5.1 Allgemein ... 37
5.2 Transport ... 37
5.3 Lagerung ... 37
5.4 Lagerbedingungen ... 38

6 Installation ... 39
6.1 Sicherheitshinweise für die Installation ... 39
6.2 Geräuschreduzierung ... 40
6.3 Mechanischer Einbau ... 41
6.3.1 Vorbereitung ... 41
6.3.2 Zahnradpumpen mit freiem Wellenende ... 41
6.4 Anschlussleitungen ... 43
6.4.1 Allgemein ... 43
6.4.2 Saugleitung ... 43
6.4.3 Druckleitung ... 45
6.4.4 Montage Anschlussleitung ... 45
6.5 Drehrichtungsänderung ... 45
7 Inbetriebnahme ... 46
7.1 Sicherheitshinweise für die Inbetriebnahme ... 46
7.2 Vorbereitung ... 46
7.3 Befüllung Quenchraum ... 47
7.4 Einstellung Druckventil ... 48
7.4.1 Druckbegrenzungsventil ... 48
7.5 Weitere Inbetriebnahme ... 49
8 Demontage ... 50
8.1 Sicherheitshinweise für die Demontage ... 50
8.2 Demontage ... 51
9 Wartung ... 52
9.1 Sicherheitshinweise für die Wartung ... 52
9.2 Wartungsarbeiten ... 53
9.3 Wartungshinweise ... 53
9.4 Wartungstabelle ... 54
Wartungstabelle ... 54
9.4.1 Kontrolle Förderstrom ... 55
9.4.2 Kontrolle Betriebsdruck ... 55
9.4.3 Kontrolle Medientemperatur ... 55
9.4.4 Kontrolle Gerätetemperatur ... 55
9.4.5 Kontrolle Funktion Anbauventil ... 55
9.4.6 Kontrolle Potenzialausgleich ... 55
9.4.7 Kontrolle Zustand Betriebsflüssigkeit ... 55
9.4.8 Hörkontrolle Ungewöhnliche Geräusche ... 55
9.4.9 Reinigung ... 56
9.4.10 Sichtkontrolle Leckage ... 56
9.4.11 Sichtkontrolle Füllstand Vorlageflüssigkeit ... 56
9.4.12 Sichtkontrolle Zustand Getriebe ... 56
9.4.13 Sichtkontrolle Zustand Gehäuseteile ... 56
9.4.14 Sichtkontrolle Zustand Gleitlager ... 56
9.4.15 Sichtkontrolle Zustand Wellenabdichtung ... 57
9.4.16 Sichtkontrolle Zustand Vorsatzlager ... 57
9.4.17 Austausch Vorsatzlager ... 57
9.4.18 Austausch Gleitlager ... 57

9.4.19 Austausch Wellenabdichtung 57
9.4.20 Austausch Sonstige Dichtungen 57

10 Instandsetzung 58

10.1 Sicherheitshinweise für die Instandsetzung 58
10.2 Allgemein 59
10.3 Störungstabelle 60

1 Allgemein

1.1 Zur Dokumentation

Die vorliegende Betriebsanleitung beschreibt die Montage, den Betrieb und die Instandhaltung des folgenden Produkts:

Zahnradpumpe KF 3/. - KF 6/.

Diese Betriebsanleitung ist Bestandteil des Produkts und muss in unmittelbarer Nähe des Produkts für das Personal jederzeit zugänglich aufbewahrt werden.

Das Produkt wird in verschiedenen Ausführungen hergestellt. Welche Ausführung im Einzelfall vorliegt, ist dem Typenschild am Produkt zu entnehmen.

Bei Fragen zu dieser Betriebsanleitung wenden Sie sich bitte an den Hersteller.

1.2 Herstelleradresse

KRACHT GmbH

Gewerbestraße 20

DE 58791 Werdohl

Tel: +49 2392 935-0

Fax: +49 2392 935-209

E-Mail: info@kracht.eu

Web: www.kracht.eu

1.3 Mitgeltende Dokumente

Beachten Sie über diese Anleitung hinaus auch die entsprechenden Anleitungen der bauseits vorhandenen oder vorgesehenen Anlagen bzw. Anlagenteile.

1.4 Symbolik

⚠ GEFAHR

Kennzeichnung einer unmittelbaren Gefährdung, die Tod oder schwere Körperverletzung zur Folge hat, wenn sie nicht vermieden wird.

⚠ WARNUNG

Kennzeichnung einer möglichen Gefährdung mit mittlerem Risiko, die Tod oder schwere Körperverletzung zur Folge haben kann, wenn sie nicht vermieden wird.

⚠ VORSICHT

Kennzeichnung einer möglichen Gefährdung mit geringem Risiko, die leichte oder mittlere Körperverletzung zur Folge haben kann, wenn sie nicht vermieden wird.

⚠ ACHTUNG!

Kennzeichnung von Hinweisen zur Vermeidung von Sachschäden.

HINWEIS

Kennzeichnung von grundsätzlichen Sicherheitshinweisen.
Werden diese Hinweise nicht beachtet, können Gefahren für Mensch und Produkt die Folge sein.

TIPP

Kennzeichnung besonderer Anwendertipps und anderer besonders nützlicher oder wichtiger Informationen.

2 Sicherheit

2.1 Bestimmungsgemäßer Gebrauch

1. Das Produkt ist für den Betrieb mit Flüssigkeiten vorgesehen.
   Ein Trockenlauf ist nicht zulässig.
2. Das Produkt darf nur vollständig gefüllt betrieben werden.
3. Die Flüssigkeit muss mit den im Produkt verwendeten Materialien verträglich sein. Dazu ist chemische Kompetenz erforderlich. Vorsicht bei Ethylenoxid oder anderen katalytisch oder exotherm reagierenden oder sich selbst zerlegenden Stoffen. Im Zweifelsfall Rücksprache mit dem Hersteller halten.
4. Das Produkt darf nur in üblicher Industrieatmosphäre eingesetzt werden.
   Beim Vorhandensein aggressiver Stoffe in der Luft ist immer der Hersteller zu befragen.
5. Der Betrieb des Produkts ist nur unter Beachtung dieser Betriebsanleitung und der mitgeltenden Dokumente zulässig.
   Abweichende Betriebsbedingungen bedürfen der ausdrücklichen Genehmigung des Herstellers.
6. Bei nicht bestimmungsgemäßen Gebrauch des Produkts erlischt jegliche Gewährleistung.

2.2 Personenqualifikation

Das Personal, das mit der Montage, der Bedienung und der Instandhaltung des Produkts beauftragt wird, muss die notwendige Qualifikation aufweisen.
Dies kann durch Schulung oder entsprechende Unterweisung geschehen.
Dem Personal muss der Inhalt der vorliegenden Betriebsanleitung bekannt sein.

HINWEIS

Die Betriebsanleitung vollständig vor Gebrauch des Produkts lesen.

2.3 Grundsätzliche Sicherheitshinweise

HINWEIS

Grundsätzliche Sicherheitshinweise

Werden diese Hinweise nicht beachtet, können Gefahren für Mensch und Gerät die Folge sein.

a) Bestehende Vorschriften zur Unfallverhütung und Sicherheit am Arbeitsplatz sowie interne Vorschriften des Betreibers einhalten.

b) Auf größtmögliche Sauberkeit achten.

c) Geeignete persönliche Schutzausrüstung tragen.

d) Typenschilder oder sonstige Hinweise nicht entfernen oder unleserlich bzw. unkenntlich machen.

e) Keine technischen Änderungen vornehmen.

f) Wartungsintervalle beachten.

g) Nur vom Hersteller freigegebene Ersatzteile verwenden.

2.4 Grundsätzliche Gefahren

⚠ GEFAHR

Gefährliche Flüssigkeiten

Lebensgefahr beim Umgang mit gefährlichen Flüssigkeiten.

a) Sicherheitsdatenblätter und Vorschriften zur Handhabung gefährlicher Flüssigkeiten beachten.

b) Gefährliche Flüssigkeiten so auffangen und entsorgen, dass keine Gefährdung für Personen oder Umwelt entsteht.

⚠ GEFAHR

Gefährliche Flüssigkeiten

Lebensgefahr beim Umgang mit gefährlichen Flüssigkeiten.

a) Beschädigte Bauteile und Anschlussleitungen müssen umgehend ausgetauscht oder repariert werden.

b) Nur Bauteile und Anschlussleitungen verwenden, die für den zu erwartenden Druckbereich zugelassen sind.

⚠ GEFAHR

Rotierende Teile

Lebensgefahr durch Erfassen oder Aufwickeln von Körperteilen, Haaren oder Kleidungsstücken.

a) Vor allen Arbeiten vorhandene Antriebe spannungs- bzw. drucklos machen.

b) Das Wiederanlaufen während der Arbeiten sicher unterbinden.

⚠ GEFAHR

Rotierende Teile

Lebensgefahr durch Erfassen oder Aufwickeln von Körperteilen, Haaren oder Kleidungsstücken.

a) Maßnahmen gegen unbeabsichtigtes Berühren von rotierenden Teilen treffen.

⚠ WARNUNG

Rotierende Teile

Verletzungsgefahr durch umherfliegende Teile.

a) Rotierende Teile so einhausen, dass bei Bruch oder Fehlfunktion keine Gefahr durch umherfliegende Teile besteht.

⚠ WARNUNG

Versagen drucktragender Teile durch Überlast

Verletzungsgefahr durch umherfliegende Teile.
Verletzungsgefahr durch herausspritzende Flüssigkeiten.

a) Vor allen Arbeiten das System drucklos machen.

b) Den Wiederaufbau des Drucks während der Arbeit sicher unterbinden.

⚠ WARNUNG

Versagen drucktragender Teile durch Überlast

Verletzungsgefahr durch umherfliegende Teile.
Verletzungsgefahr durch herausspritzende Flüssigkeit.

a) Nur Anschlüsse und Leitungen verwenden, die für den zu erwartenden Druckbereich zugelassen sind.

b) Ein Überschreiten der zulässigen Drücke sicher verhindern, z.B. durch den Einsatz von Druckbegrenzungsventilen oder Berstscheiben.

c) Rohrleitungen so ausführen, dass auch während des Betriebs keine Spannungen, z.B. durch Längenänderung aufgrund von Temperaturschwankungen, auf das Produkt übertragen werden.

⚠ WARNUNG

Versagen drucktragender Teile durch Überlast

Verletzungsgefahr durch umherfliegende Teile.
Verletzungsgefahr durch herausspritzende Flüssigkeit.

a) Das Produkt nicht gegen geschlossene Absperrorgane betreiben.

b) Das Produkt nicht in der falschen Drehrichtung betreiben.

3 Gerätebeschreibung

3.1 Funktionsprinzip

Pumpen dieser Baureihe sind Außenzahnradpumpen, die nach dem Verdrängerprinzip arbeiten.

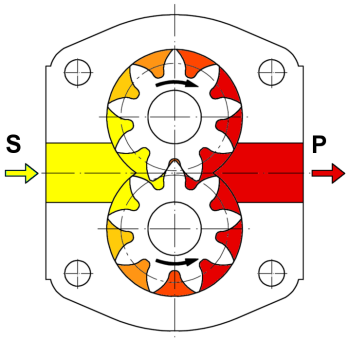

S Sauganschluss
P Druckanschluss

Zwei miteinander im Eingriff befindliche Zahnräder bewirken bei Drehung eine Volumenvergrößerung durch Öffnen der Zahnlücken auf der Saugseite (S), sodass Medium einströmen kann und gleichzeitig auf der Druckseite (P) durch Eintauchen der Zähne in die gefüllten Zahnlücken ein entsprechendes Volumen verdrängt wird. Der Flüssigkeitstransport erfolgt durch Mitnahme in den Zahnlücken entlang der Radkammerwandung. Pro Radumdrehung wird das sogenannte geometrische Fördervolumen V_g verdrängt. Ein Wert, der zur Kennzeichnung der Pumpengröße als Nennvolumen V_{gn} in technischen Unterlagen genannt ist.

Der beschriebene Verdrängungsvorgang erfolgt zunächst ohne merklichen Druckaufbau. Erst nach Vorgabe äußerer Belastungen z.B. durch Förderhöhen, Durchflusswiderständen, Leitungselementen, etc. stellt sich der zum Überwinden dieser Widerstände erforderliche Arbeitsdruck ein.

Der an der Wellenabdichtung anstehende Druck entspricht dem Druck am Sauganschluss des Geräts. Der zulässige Druck wird bestimmt durch die Dichtungsart.

3.2 Ausführungsvarianten

Zahnradpumpe

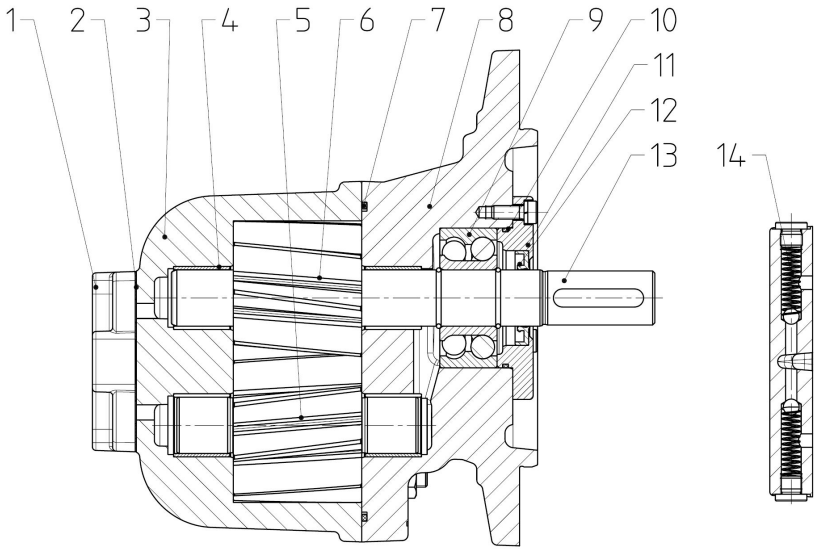

1 Abschlussdeckel
2 Dichtung
3 Gehäuse
4 Lagerbuchse
5 Bolzenrad
6 Zahnrad
7 O-Ring
8 Flanschdeckel
9 Vorsatzlager
(nur Wellenende : N; M; R)
10 O-Ring
11 Dichtungshalter
12 Wellenabdichtung
(**Dichtungsarten** [▶ 18])
13 Antriebswellenende
14 Ventil
(nur Drehrichtung : 3)

Zahnradpumpe mit Druckbegrenzungsventil

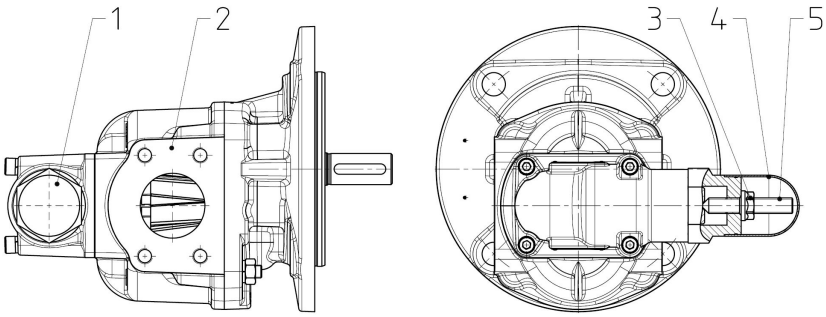

1 Druckbegrenzungsventil
2 Zahnradpumpe
3 Bundmutter
4 Abdeckung
5 Einstellschraube

Ausführung Abdeckung

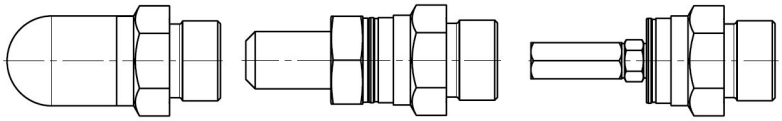

Gewindeschutzkappe Hutmutter Hutmutter KN17

Zahnradpumpe mit Universalventil

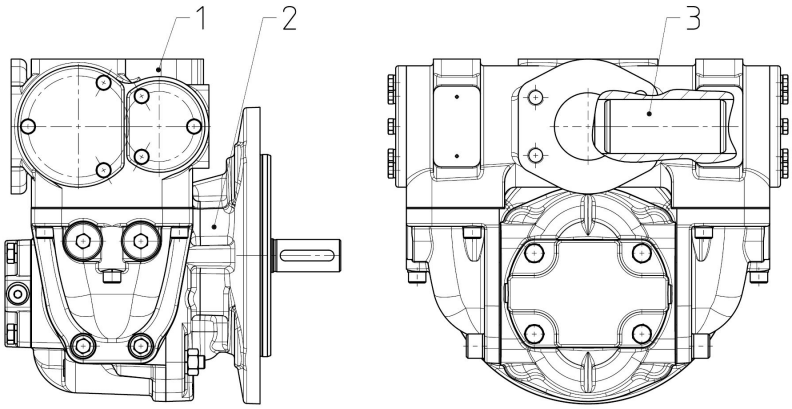

1 Universalventil
2 Zahnradpumpe
3 Druckkolben

3.3 Typenschlüssel

Bestellbeispiel																		
KF		**3/**	**63**		**F**	**1**	**0**	**B**		**P**	**0**	**0**		**7**	**D**	**P**	**2**	**/...**
1.		2.	3.		4.	5.	6.	7.		8.	9.	10.		11.	12.	13.	14.	15.

Bestellbeispiel				
+		**DKF 3**	**D**	**04**
		16.	17.	18.
+		**KF 4 U 04**		
		19.		

Erläuterung zum Typenschlüssel			
1. Produktname			
2. Baugröße			
3	**4**	**5**	**6**
3. Nenngröße			
V_{gn}	**KF 3/.** : 63; 80; 100; 112 **KF 4/.** : 125; 150; 180 **KF 5/.** : 200; 250; 315 **KF 6/.** : 400; 500; 630; 730		
4. Flanschausführung			
F	KF 3/. A-Ø= 180; Z-Ø= 130; LK-Ø= 150	**H**	KF 5/. - KF 6/. A-Ø= 250; Z-Ø= 180; LK-Ø= 215
G	KF 4/. A-Ø= 220; Z-Ø= 150; LK-Ø= 185		
A= Außendurchmesser; Z= Zentrierdurchmesser ; LK= Lochkreis;			
5. Drehrichtung			
1	Rechts	**3**	Rechts oder Links Förderrichtung wechselnd
2	Links		
6. Vorsatzflansch			
X	Winkelfuß	**0**	Ohne Vorsatzflansch
7. Gehäusebauform			
B	Gehäuse mit Flanschanschluss		
8. Wellenende			
P	Zylindrische Welle Ohne Vorsatzlager	**M**	Zylindrische Welle mit Vorsatzlager (verstärkt)
N	Zylindrische Welle mit Vorsatzlager	**R**	Zylindrische Welle mit Vorsatzlager (verstärkt), Wellenende verkürzt
9. 2.tes Wellenende			
0	Ohne 2.tes Wellenende		

Erläuterung zum Typenschlüssel			
10. Abschlussdeckel			
A	nur für Drehrichtung 1 oder 2	**0**	Ohne Abschlussdeckel (für Ventilanbau)
B	nur für Drehrichtung 3		
11. Konstruktionskennziffer (interne Vergabe)			
12. Gehäusewerkstoff und Gleitlager			
D	EN-GJL-250 (GG-25) Mehrschichtgleitlager bleihaltig	**V**	EN-GJS-400-15 (GGG-40) Mehrschichtgleitlager bleihaltig
13. Getriebeausführung			
P	Schrägverzahnung		
14. Dichtungsart			
1	Radialwellendichtring NBR	**74**	Gleitringdichtung mit CR-Nebendichtungen Q3ANFE (KF 3/.) (Für Kompressoranwendungen)
2	Radialwellendichtring FKM	**75**	Gleitringdichtung mit HNBR-Nebendichtungen Q3AVFE (KF 3/.) (Für Kompressoranwendungen)
29	Gleitringdichtung mit FKM-Nebendichtungen SAVGG	**77**	Gleitringdichtung mit FKM-Nebendichtungen Q3AVFE (KF 3/.) (Für Kompressoranwendungen)
30	Gleitringdichtung mit PTFE-Nebendichtungen SATGG	**79**	Radialwellendichtring FKM (Tieftemperatur) (gilt nur für KF 4/.)
32	Radialwellendichtring PTFE	**87**	Gleitringdichtung mit CR-Nebendichtungen (AX20) Q2B2K1G3 (KF 4/. - KF 6/.) (Für Kompressoranwendungen)
37	Radialwellendichtring FKM (Tieftemperatur) (gilt nur für KF 3/.)	**88**	Gleitringdichtung mit HNBR-Nebendichtungen (AX20) Q2B2K1G3 (KF 4/. - KF 6/.) (Für Kompressoranwendungen)
39	Gleitringdichtung mit FKM-Nebendichtungen	**89**	Gleitringdichtung mit FKM-Nebendichtungen

Erläuterung zum Typenschlüssel			
	SAVGG (mit Flüssigkeitsvorlage)		(AX20) Q2B2K1G3 (KF 4/. - KF 6/.) (Für Kompressoranwendungen)
40	Gleitringdichtung mit PTFE-Nebendichtungen QQTGG (mit Flüssigkeitsvorlage)		
15. Sondernummer			
Sondernummern [▸ 22]			
16. Druckbegrenzungsventil			
DKF 3	für KF 3/.	**DKF 5**	für KF 5/.
DKF 4	für KF 4/.	**DKF 6**	für KF 6/.
17. Ausführung DKF-Ventil			
A	Gehäusewerkstoff : EN-GJL-250 (GG-25)	**L**	Gehäusewerkstoff : EN-GJS-400-15 (GGG-40)
	Dichtung pumpenseitig : Sonstige Dichtungen O-Ring NBR		Dichtung pumpenseitig : Sonstige Dichtungen O-Ring FKM
	Abdeckung : Gewindeschutzkappe		Abdeckung : Hutmutter KN17
C	Gehäusewerkstoff : EN-GJL-250 (GG-25)	**N**	Gehäusewerkstoff : EN-GJS-400-15 (GGG-40)
	Dichtung pumpenseitig : Sonstige Dichtungen O-Ring Kupfer		Dichtung pumpenseitig : Sonstige Dichtungen O-Ring Kupfer
	Abdeckung : Hutmutter KN17		Abdeckung : Hutmutter KN17
D	Gehäusewerkstoff : EN-GJL-250 (GG-25)	**U**	Gehäusewerkstoff : EN-GJL-250 (GG-25)
	Dichtung pumpenseitig : Sonstige Dichtungen O-Ring FKM		O-Ring : Werkstoff durch Pumpe definiert
	Abdeckung : Gewindeschutzkappe		Abdeckung : Gewindeschutzkappe
G	Gehäusewerkstoff : EN-GJS-400-15 (GGG-40)	**V**	Gehäusewerkstoff : EN-GJS-400-15 (GGG-40)
	Dichtung pumpenseitig : Sonstige Dichtungen O-Ring NBR		O-Ring : Werkstoff durch Pumpe definiert
	Abdeckung : Hutmutter KN17		Abdeckung : Hutmutter KN17

Erläuterung zum Typenschlüssel			
H	Gehäusewerkstoff : EN-GJL-250 (GG-25)	**W**	Gehäusewerkstoff : EN-GJL-250 (GG-25)
	Dichtung pumpenseitig : Sonstige Dichtungen O-Ring NBR		O-Ring : Werkstoff durch Pumpe definiert
	Abdeckung : Hutmutter KN17		Abdeckung : Hutmutter KN17
K	Gehäusewerkstoff : EN-GJL-250 (GG-25)		
	Dichtung pumpenseitig : Sonstige Dichtungen O-Ring FKM		
	Abdeckung : Hutmutter KN17		
18. Druckeinstellbereich			
04	2 – 4 bar	**16**	8 – 16 bar
08	4 – 8 bar	**25**	16 – 25 bar
19. Universalventil			
KF 4 U 04	für KF 3/.	**KF 5 U 07**	für KF 5/250
KF 4 U 05	für KF 4/.		für KF 5/315
KF 5 U 06	für KF 5/200	**KF 6 U 08**	für KF 6/.

3.4 Dreh- und Förderrichtung

Die Drehrichtung wird durch den gebogenen Pfeil angezeigt, mit Blick auf das Antriebswellenende. Die Pumpenanschlüsse liegen unterhalb der Antriebswelle.

Die Förderrichtung wird durch die geraden Pfeile angezeigt.

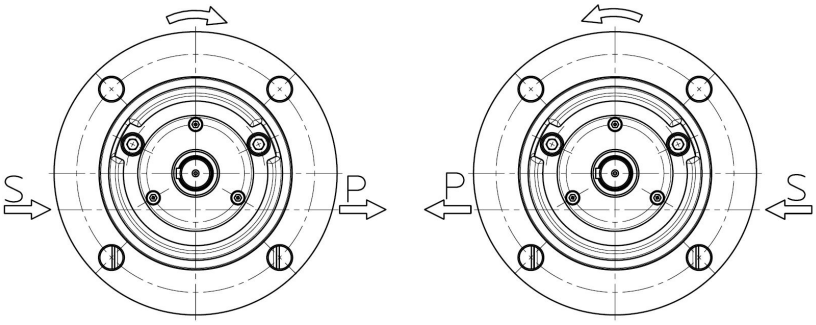

S = Sauganschluss

P = Druckanschluss

3.5 Dichtungsarten

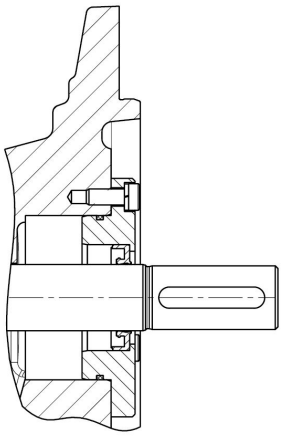

Radialwellendichtring

Wellenende : P; U

Dichtungsart : 1; 2; 32; 37; 79

Sondernummer 155; 197; 250; 291; 304; 317; 332; 344; 353; 370; 398; 454; 472

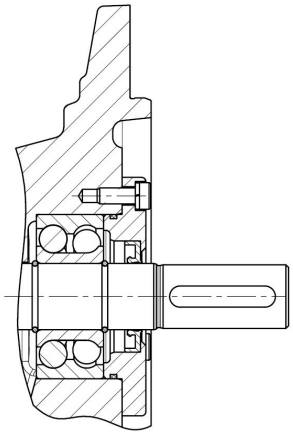

Radialwellendichtring mit Vorsatzlager

Wellenende : K; M; N; R

Dichtungsart : 1; 2; 32

Sondernummer : 18; 20; 24; 45; 51; 61; 70; 79; 89; 104; 122; 149; 196; 197; 221; 222; 260; 265; 266; 304; 326; 336; 352; 378; 397; 398; 427

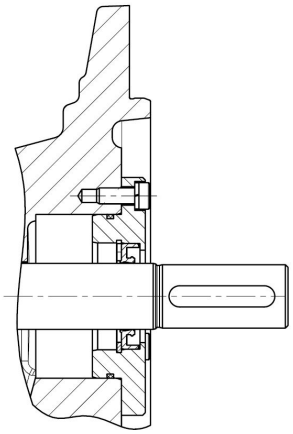

Radialwellendichtring (für Vakuumbetrieb)

Wellenende : P

Dichtungsart : 1; 2

Sondernummer 191

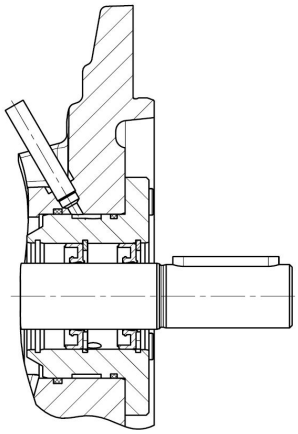

Doppel-Radialwellendichtring

Anschlussrohr 8x1 (für Flüssigkeitsvorlage)

Wellenende : P

Dichtungsart : 1; 2; 32

Sondernummer : 44; 261; 297; 306; 440

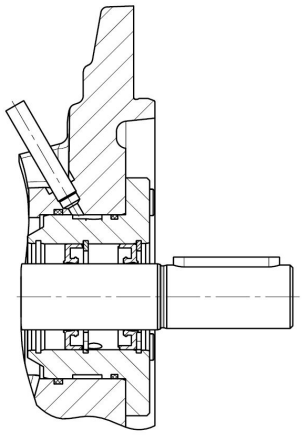

Doppel-Radialwellendichtring (für Vakuum-betrieb)

Anschlussrohr 8x1 (für Flüssigkeitsvorlage)

Wellenende : P

Dichtungsart : 1; 2

Sondernummer 74; 309

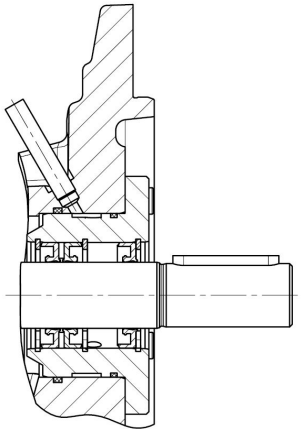

Dreifach-Radialwellendichtring (für Vakuum-betrieb/für Normalbetrieb)

Anschlussrohr 8x1 (für Flüssigkeitsvorlage)

Wellenende : P

Dichtungsart : 1; 2

Sondernummer : 94

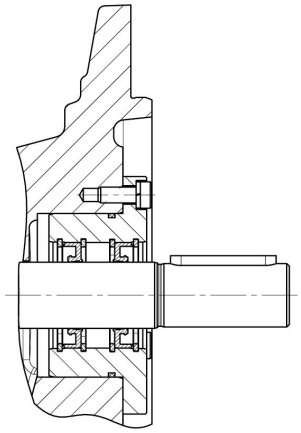

Doppel-Radialwellendichtring

mit Fettfüllung

Wellenende : P

Dichtungsart : 1; 2

Sondernummer : 255

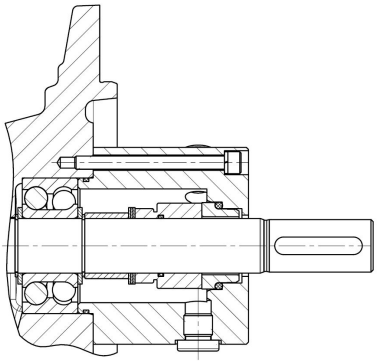

Gleitringdichtung

mit Vorsatzlager

Wellenende : N

Dichtungsart : 29; 30; 87; 88; 89

Sondernummer : 304; 317; 332;445; 446; 447; 531

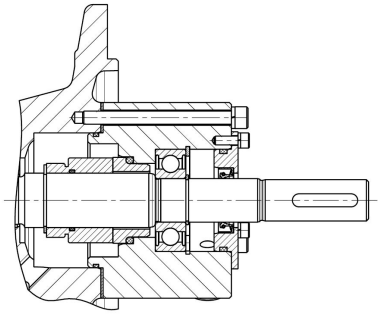

Gleitringdichtung

Anschlussbohrung G ¼ (für Flüssigkeitsvorlage)

Wellenende : N

Dichtungsart : 39; 40

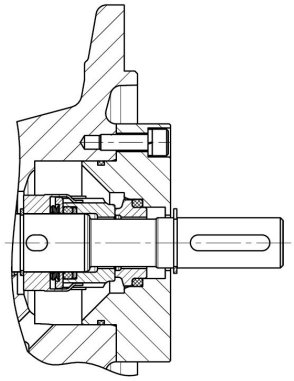

Gleitringdichtung

Wellenende : N

Dichtungsart : 43; 55; 56;74; 75; 77

Sondernummer : 153; 172; 177; 216; 379; 393; 415; 438

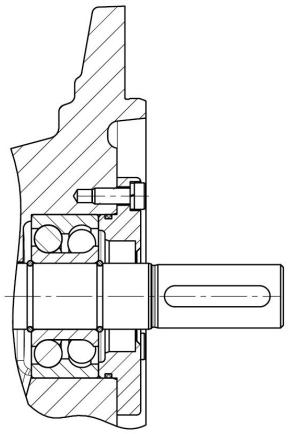

ohne Wellenabdichtung
Wellenende : N; R
Dichtungsart : 1; 2
Sondernummer : 95; 104; 196; 296; 308; 369

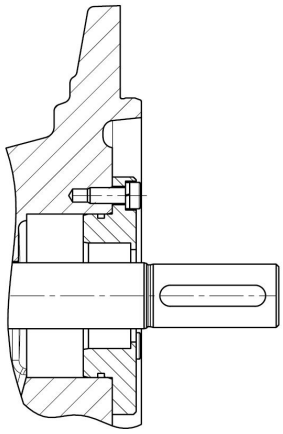

ohne Wellenabdichtung
ohne Vorsatzlager
Wellenende : P
Sondernummer : 104; 196; 266; 301; 498
Dichtungsart : 1; 2

3.6 Flüssigkeitsvorlage

Ausführungen mit Flüssigkeitsvorlage werden dann eingesetzt, wenn absolute Dichtheit an der Wellenabdichtung gefordert ist, z.B. bei der Förderung von Medien,

- die bei Kontakt mit Luft aushärten.
- die bei Kontakt mit Luftfeuchtigkeit kristallisieren
- deren Leckage nicht in die Umwelt gelangen darf
- die unter Vakuum stehen und deren Dichtung gasdicht sein soll.

Die Einbaulage ist so zu wählen, dass der Anschluss für die Flüssigkeitsvorlage oben liegt.

3.7 Sondernummern

Sondernummer	Beschreibung
18	Verstärkte Wellenausführung (M-Welle)
20	Verstärkte Wellenausführung (M-Welle)
24	6-Loch Befestigungsflansch
44	Doppel-Radialwellendichtring
45	Wellenende zylindrisch - mit Zentrierbohrung DIN 332-2 Typ D
51	Wellenende zylindrisch - mit Zentrierbohrung DIN 332-2 Typ D
61	Kegeliges Wellenende
70	Übergangsstück ; 2.tes Wellenende Kundenspezifisches Typenschild
74	Doppel-Radialwellendichtring für Vakuumbetrieb
79	Antriebswelle durchbohrt Abschlussdeckel mit Anschluss M22x1,5
89	Flanschdeckel mit seitlicher Ausnehmung
94	Dreifach-Radialwellendichtring
95	ohne Wellenabdichtung Schmierölbohrung im Flanschdeckel
104	ohne Wellenabdichtung
122	Wie **Sondernummer 79** Abschlussdeckel mit G ½ Anschluss
149	2.tes Wellenende
153	**Für Kompressoranwendungen** O-Ring: CR Kunststoffgleitlager (buntmetallfrei)
155	Wellenende mit Zahnwellenprofil Leckölabführung über Düse im Antriebswellenende
172	**Für Kompressoranwendungen** Wie **Sondernummer 153** O-Ring: HNBR
177	**Für Kompressoranwendungen** Wie **Sondernummer 153** Abschlussdeckel als Sauganschluss mit Adapterplatte
191	Radialwellendichtring für Vakuumbetrieb + **Sondernummer 197**
196	ohne Wellenabdichtung + **Sondernummer 197**
197	Geräuschoptimierte Ausführung für lufthaltige Öle

Sondernummer	Beschreibung
216	**Für Kompressoranwendungen** Wie **Sondernummer 177** O-Ring: HNBR
221	Kombination aus **Sondernummer 122 + 197**
222	Kombination aus **Sondernummer 79 + 197**
250	Kombination aus **Sondernummer 155 + 197**
255	Einsatz unter Wasser Doppel-Radialwellendichtring BABSL + Fettfüllung Befestigungsschrauben: Edelstahl (A4) + **Sondernummer 197**
260	mit Universalventil Geräuschreduziert
261	Kombination aus **Sondernummer 44 + 197**
265	Einsatz unter Wasser Wie **Sondernummer 260** Dichtflächen sind zusätzlich abgedichtet
266	ohne Wellenabdichtung Leckölabführung über Düse im Antriebswellenende + **Sondernummer 197**
291	Edelstahl-Typenschild und Nieten
296	mit Universalventil ohne Wellenabdichtung Geräuschreduziert
297	Innerer Radialwellendichtring Turcon Roto Variseal (p_{max}=10 bar bei 700 1/min) Äußerer Radialwellendichtring BABSL Kunststoffgleitlager (buntmetallfrei) Hennecke – Typenschild
301	Kombination aus **Sondernummer 196 + 282**
304	Kunststoffgleitlager (buntmetallfrei)
306	Doppel-Radialwellendichtring Kunststoffgleitlager (buntmetallfrei) Hennecke – Typenschild **+** Sondernummer **197**
309	Kombination aus **Sondernummer 74 + 197**
317	Kombination aus **Sondernummer 197 + 304**
326	Kombination aus **Sondernummer 45 + 197** KF 150 + KF 200: Wellenende Bohrung M8 / 19 mm tief.
332	**Sondernummer 304**
336	ohne Wellenabdichtung mit Vorsatzlager

Sondernummer	Beschreibung
344	Wellenende mit Zahnwellenprofil + **Sondernummer 197**
352	mit Universalventil O-Ring FKM - Tieftemperatur + **Sondernummer 197**
353	Mehrschichtgleitlager bleifrei + **Sondernummer 197**
369	Kombination aus **Sondernummer 45 + 196**
370	Wellenende mit Zahnwellenprofil Mit SAE B 2-Loch-Flansch Kunststoffgleitlager (buntmetallfrei)
378	O-Ring Abdichtung an der Flanschdeckelzentrierung
379	**Für Kompressoranwendungen** O-Ring CR Kunststoffgleitlager (buntmetallfrei)
393	**Für Kompressoranwendungen** Wie **Sondernummer 153** O-Ring FKM
397	Einsatz unter Wasser mit Universalventil Befestigungsschrauben: Edelstahl
398	Einsatz unter Wasser Befestigungsschrauben: Edelstahl + **Sondernummer 197**
415	**Für Kompressoranwendungen** Wie **Sondernummer 379** O-Ring HNBR
427	Wie **Sondernummer 197** Sonderwellenende
438	**Für Kompressoranwendungen** Wie **Sondernummer 379** O-Ring FKM
440	Wie **Sondernummer 44** Radialwellendichtring BABSL
445	**Für Kompressoranwendungen** Optimierte Dichtungsschmierung Kunststoffgleitlager (buntmetallfrei)
446	**Für Kompressoranwendungen** Wie **Sondernummer 445**

Sondernummer	Beschreibung
447	**Für Kompressoranwendungen** Wie **Sondernummer 445**
454	Wellenende mit Düse + **Sondernummer 197**
472	Kombination aus **Sondernummer 44 + 197** Kunststoffgleitlager (buntmetallfrei)
498	Wie **Sondernummer 266**
531	Weissmetallgleitlager + **Sondernummer 197**

3.8 Wellenenden

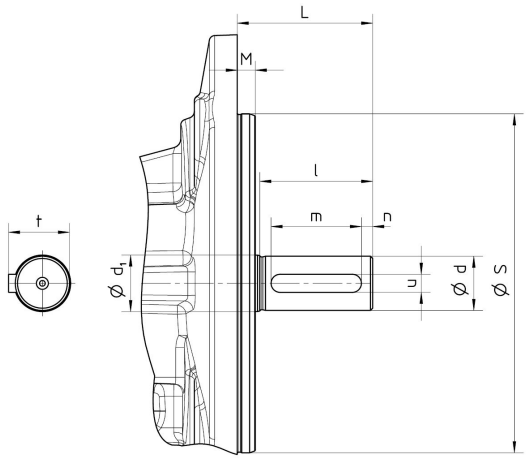

Nenngröße	Wellenende	L	S_{h6}	M	d_{k6}	d_1	l	m	n	t	u
KF 3/.	P-Welle	60	130	5	19	20	50	30	5	21,5	6
	N-Welle				24	35			10	27	8
	R-Welle	50			28	35	40	30	5	31	8
	M-Welle	70					60	40	10		
KF 4/.	P,N-Welle	60	150	8	24	25	50	40	5	27	8
	R-Welle				32	40	50	40	5	35	10
	M-Welle	95					80	50	15		
KF 5/.	P, N-Welle	70	180		28	30	60	40	10	31	8
	R-Welle	70			38	45	60	40	10	41	10
	M-Welle	95					80	50	15		
KF 6/.	P, N-Welle	95	180		38	40	80	63	8	41	10
	M-Welle				42	45				45	12

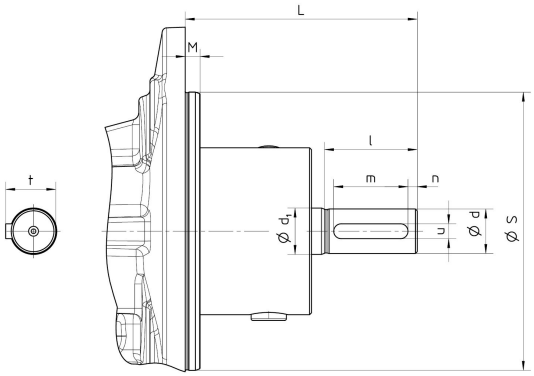

Nenngröße	Sondernummer	L	S_{h6}	M	d_{k6}	d_1	l	m	n	t	u
KF 3/. mit Gleitringdichtung	-	120	130	5	24	35	50	30	10	27	8
	153/172/177/216/379/415	60			19	19	40		5	21,5	6
KF 4/. mit Gleitringdichtung	-	125	150	8	24	25	50	40	5	27	8
	445/446/447/531	110			19	20	40	30		21,5	6
KF 5/. mit Gleitringdichtung	-	125	180		28	30	60	40	10	31	8
	447	120			24	25	50		5	27	
KF 6/. mit Gleitringdichtung	-	160	180		38	40	80	63	8	41	10
	153/172/447	125			32	35	50	40	5	35	

4 Technische Daten

4.1 Allgemein

Allgemeine Angaben			
Gehäuseanschluss		KF 3/.	Flanschanschluss SAE 1 1/2" – M10
		KF 4/.	Flanschanschluss SAE 2"
		KF 5/200	Flanschanschluss SAE 2 1/2"
		KF 5/250 - KF 5/315	Flanschanschluss SAE 3" – M12
		KF 6/.	Flanschanschluss SAE 4"
		KF 3/. ... + KF 4 U 04	Flanschanschluss SAE 2"
		KF 4/. ... + KF 4 U 05	
		KF 5/200 ... + KF 5 U 06 - KF 5/315 ... + KF 5 U 07	Flanschanschluss SAE 3" – M12
		KF 6/. ... + KF 6 U 08	Sauganschluss : Flanschanschluss SAE 4"
			Druckanschluss : Flanschanschluss SAE 3" – M12
Einbaulage		KF ./. ohne Flüssigkeitsvorlage	Beliebig
		KF ./. mit Flüssigkeitsvorlage	Wellenende waagerecht , Anschluss Flüssigkeitsvorlage oben
		KF ./.+ KF . U ..	Druckkolben waagerecht Druckanschluss oben
Einbaulage **Für Kompressoranwendungen**		Sondernummer : 153; 172; 177; 216; 393; 446	vertikal, Wellenende oben
		Sondernummer : 379; 415; 438; 445; 531	Wellenende waagerecht
		Sondernummer : 447	Wellenende waagerecht / vertikal, Wellenende oben
Äußere Kräfte am Wellenende		KF ./.	Axialkräfte und Radialkräfte sind nur in Verbindung mit einem Vorsatzlager zulässig **Nenngröße [▸ 28]**
		Ausführung mit Gleitring-dichtung	Axiale und radiale Kräfte sind nicht zulässig
Drehzahl	**n**	**Nenngröße [▸ 28]** + **Zuordnung Viskosität - Dreh-zahl [▸ 29]**	
Betriebsdruck	p_e	**Zulässige Drücke [▸ 29]**	
	p_b		

Allgemeine Angaben		
Viskosität	ν_{min}	**Zuordnung Differenzdruck - Viskosität [▸ 32]**
	ν_{max}	15000 mm²/s
Medientemperatur	ϑ_m	**Zulässige Temperaturen [▸ 32]**
Umgebungstemperatur	ϑ_u	**Zulässige Temperaturen [▸ 33]**
Filterfeinheit	β	≤ 60 µm
Werkstoffe		**Werkstoffangaben [▸ 34]**
Zulässige Medien		Schmierfähige Flüssigkeiten ohne abrasive Bestandteile (Benzine, Lösungsmittel etc. sind nicht zulässig) Für Kompressoranwendungen : Kältemaschinenöl (max. 5% Gasanteil) , Hydrauliköl , Mineralöl

TIPP

Bei Einbaulage senkrecht (Wellenende oben) ist eventuell mit einer verringerten Lebensdauer der Wellenabdichtung zu rechnen.

4.2 Nenngröße

Nenngröße V_{gn}	Geometrisches Fördervolumen V_{gn}[cm³/U]	Drehzahl n_{min} [1/min]	Drehzahl n_{max} (2) [1/min]	Zulässige Radialkraft F_{radial} [N] (n= 1500 1/min)	Zulässige Axialkraft F_{axial} [N] (n= 1500 1/min)	Schalldruckpegel L_{pA} (1) [dBA]	Massenträgheitsmoment x 10^{-4} J [kg m²]
KF 3/63	63,8	200	2000	1500	200	≤ 75	4,25
KF 3/80	81,3					≤ 76	5
KF 3/100	100,8						6,75
KF 3/112	112,6					≤ 77	7,5
KF 4/125	129					≤ 78	13,75
KF 4/150	153					≤ 79	16
KF 4/180	184					≤ 80	19,25
KF 5/200	204			2000	300	≤ 81	27,5
KF 5/250	255					≤ 82	34,5
KF 5/315	321						43
KF 6/400	405			3000	500		105
KF 6/500	505					≤ 83	130
KF 6/630	629					≤ 84	160
KF 6/730	730		1500			≤ 85	195

(1) n= 1500 1/min; v= 34 mm²/s; p= 5-25 bar

(2) Viskosität beachten

4.3 Zuordnung Viskosität - Drehzahl

Kinematische Viskosität ν [mm²/s]	Empfohlene Drehzahl n [1/min]
400	2000
500	1800
1000	1200
2000	800
3000	650
6000	450
10000	300
15000	250
20000	200

TIPP

Die Drehzahl so wählen, dass eine vollständige Füllung der Pumpe gewährleistet ist. Dieses ist gegeben, wenn der zulässige Druck $p_{e\,min.}$ an der Saugseite nicht unterschritten wird.

4.4 Zulässige Drücke

4.4.1 Betriebsdruck Saugseite

Dichtungsart	Sondernummer	Betriebsdruck Saugseite	
		$p_{e\,min}$ [bar abs.]	$P_{e\,max}$ [bar rel.]
1	-	0,6 (1)	1 (KF 5/. : 0,5)
	74	0,1	0,2
	191		
	196	0,6 (1)	Betriebsdruck Druckseite
	309	0,1	0,2
2	-	0,6 (1)	1 (KF 5/. : 0,5)
	74	0,1	0,2
	191		
	196	0,6 (1)	Betriebsdruck Druckseite
	309	0,1	0,2
29	-	0,6 (1)	10
30	-		
32	-		0,5
37	-		
39	-		10

Dichtungsart	Sondernummer	Betriebsdruck	
		Saugseite	
		$p_{e\,min}$ [bar abs.]	$P_{e\,max}$ [bar rel.]
40	-		
79	-		0,5
[1] Anfahrzustand: 0,4 bar abs. (max. 30 Minuten)			

Universalventil		
Nenngröße V_{gn}	**Betriebsdruck**	
	Saugseite	
	$p_{e\,min}$ [bar abs.]	**$p_{e\,max}$ [bar rel.]**
KF 3/63	0,64	**Betriebsdruck Saugseite** [▸ 29]
KF 3/80		
KF 3/100		
KF 3/112	0,65	
KF 4/125	0,66	
KF 4/150	0,67	
KF 4/180	0,68	
KF 5/200	0,62	
KF 5/250	0,63	
KF 5/315	0,64	
KF 6/400	0,63	
KF 6/500	0,64	
KF 6/630	0,67	
KF 6/730	-	

4.4.2 Betriebsdruck Druckseite

Nenngröße V_{gn}	Betriebsdruck	
	Druckseite	
	p_b [bar] (Zulässiger Dauerdruck)	**$p_{b\,max}$ [bar] (Höchstdruck) [1]**
KF 3/63	25	50
KF 3/80		40
KF 3/100		30
KF 3/112		25
KF 4/125		40
KF 4/150		30
KF 4/180		25
KF 5/200		30
KF 5/250	20	25
KF 5/315	16	20

Nenngröße V_{gn}	Betriebsdruck	
	Druckseite	
	p_b [bar] (Zulässiger Dauerdruck)	$p_{b\,max}$ [bar] (Höchstdruck) [1]
KF 6/400	25	30
KF 6/500	20	25
KF 6/630	16	20
KF 6/730	14	16
[1] Höchstdruck: nur gültig für Betrieb mit Mineralölen bei Drehzahlen >700 1/min und Viskositäten 30 mm²/s - 1000 mm²/s		

4.4.3 Betriebsdruck Saug- und Druckseite

4.4.3.1 Kompressoranwendung

Dichtungsart	Sondernummer	Betriebsdruck		
		Saugseite		Druckseite
		$p_{e\,min}$ [bar abs.]	$P_{e\,max}$ [bar rel.]	p_b [bar] (Zulässiger Dauerdruck)
74	153	0,6 [1]	25	35 KF 6/730 : 31
	177			
	379			
75	172			
	216			
	415			
77	393			
	438			
87	445			
	446			
	447			
88	445			
	446			
	447			
89	445			
	446			
	447			
[1] Anfahrzustand: 0,4 bar abs. (max. 30 Minuten)				

4.5 Zuordnung Differenzdruck - Viskosität

Lagerung	Δp_{max} [bar]			
	ν = 1,4 mm²/s	ν = 6 mm²/s	ν = 12 mm²/s	
Mehrschichtgleitlager bleihaltig (Standard)	3	12	KF 3/.	25
			KF 4/.	
			KF 5/200	
			KF 5/250	20
			KF 5/315	16
Mehrschichtgleitlager bleifrei			KF 6/400	25
			KF 6/500	20
			KF 6/630	16
			KF 6/730	14
Kunststoffgleitlager	-	3	10 (1)	
Weissmetallgleitlager			KF 6/730 : 6 (1)	
(1) Für Kompressoranwendungen ν ≥ 7 mm²/s				

4.6 Zulässige Temperaturen

Dichtungswerkstoff	Medientemperatur ϑ_m	
	$\vartheta_{m\,min}$ [°C]	$\vartheta_{m\,max}$ [°C]
CR	-20	100
EPDM		120
FEP mit FKM-Kern		200
FFKM / FEP mit FKM-Kern		200
FKM		150
HNBR		
NBR		90
PTFE / FEP mit FKM-Kern		200
FKM (**Tieftemperatur**)	-30	150

Dichtungswerkstoff	Umgebungstemperatur ϑ_u	
	$\vartheta_{u\,min}$ [°C]	$\vartheta_{u\,max}$ [°C]
CR	- 20	60
EPDM		
FEP mit FKM-Kern		
FFKM / FEP mit FKM-Kern		
FKM		
HNBR		
NBR		
PTFE / FEP mit FKM-Kern		
FKM (**Tieftemperatur**)	-30	

HINWEIS

Zahnradpumpe der Baugröße 3 für Kompressoranwendung haben als Lagerwerkstoff Igli-dur® G , hier beträgt die Medientemperatur $\vartheta_{m\,max}$ 110 °C

HINWEIS

Medienspezifische Eigenschaften beachten.

4.7 Werkstoffangaben

Dichtungsart	Werkstoffe				
	Wellenabdichtung	O-Ring/ Flachdichtung	Gehäuse/ Flanschdeckel/ Abschlussdeckel/ Druckbegrenzungsventil	Getriebe	Lagerung
1	NBR	NBR , C4400	EN-GJL-250 (GG-25) - - - EN-GJS-400-15 (GGG-40)	Einsatzstahl (Stahl 1.7139)	Mehrschichtgleitlager bleihaltig (Standard) (Stahl , CuSn , PTFE , Pb) - - - Kunststoffgleitlager buntmetallfrei Iglidur® X - - - Mehrschichtgleitlager bleifrei (Stahl , CuSn , PTFE) - - - Weissmetallgleitlager (Stahl , Cu , Sn , Sb , Cd , Ni , As)
2	FKM	FKM , C4400			
29	SAVGG , FKM , 1.4571	FEP , C4400			
30	SATGG , PTFE , 1.4571	FEP , C4400			
32	PTFE	FEP , C4400			
37	FKM (Tieftemperatur)	FKM (Tieftemperatur)			
39	SAVGG , FKM , 1.4571	FKM , C4400			
40	QQTGG , PTFE , 1.4571	FEP mit FKM-Kern , C4400			
79	FKM (Tieftemperatur)	FKM (Tieftemperatur)			

4.7.1 Kompressoranwendung

Dichtungs-art	Werkstoffe				
	Wellenab-dichtung	O-Ring	Gehäuse/ Flanschde-ckel/ Abschlussde-ckel/ Druckbegren-zungsventil	Getriebe	Lagerung
74	Q3ANFE , CR	CR	EN-GJL-250 (GG-25) - - - EN-GJS-400-15 (GGG-40)	Einsatzstahl (Stahl 1.7139)	Kunststoff-gleitlager buntmetallfrei Iglidur® X Iglidur® G Iglidur® H370
75	Q3AP1FE , HNBR	HNBR			
77	Q3AVFE , FKM	FKM			
87	Q2B2K1G3 , FFKM	CR			
88	Q2B2K1G3 , FFKM	HNBR			
89	Q2B2K1G3 , FFKM	FKM			

Kältemittel		Öl							
		M	M*	M* - PAO	AB	E	PAO	AB – PAO	PAG
R717 (NH3)	**Ammoniak**	CR / HNBR	CR / HNBR	CR / HNBR	CR	-	CR [1] / HNBR	CR	CR / HNBR
R290 (C3H8)	**Propan**	-	-	-	-	-	HNBR	-	HNBR
R1270 (C3H6)	**Propylen**	-	-	-	-	-	HNBR	-	HNBR
R744 (CO2)	**Kohlendioxid**	-	-	-	-	CR	HNBR	-	CR
R22	**H-FCKW**	CR	-	-	CR	CR	-	CR	-
R134a, R404a, R407C, R410A, R507, R23	**H-FKW**	-	-	-	-	HNBR	-	-	-

[1]) nur für die Öle: Fuchs Reniso Synth 68, Klüber Summit R100/R150/R200

M = Mineralöl

M* = Mineralöl mit spezieller Behandlung (hydrocracked oil)

AB = Alkylbenzen

E = Polyester

PAO = Polyalphaolefin

PAG = Polyalkylglykol

4.8 Gewicht

Nenngröße V_{gn}	Zahnradpumpe [kg]			Zusatzgewicht [kg]	
	mit Abschlussdeckel	mit Druckbegrenzungsventil	mit Universalventil	Gleitringdichtung	Winkelfuß
KF 3/63	12	13,5	32	1,5	2,6
KF 3/80					
KF 3/100	13,5	15	34		
KF 3/112					
KF 4/125	18,5	20	39		4,9
KF 4/150	20	21,5	40		
KF 4/180	21	22,5	41		
KF 5/200	28	30	80	2	8,8
KF 5/250	33	35	85		
KF 5/315					
KF 6/400	51	59	103	3	18,8
KF 6/500	55	63	107		
KF 6/630	65	73	117		
KF 6/730					

4.9 Abmessungen

Die Abmessungen des Produkts sind den technischen Datenblättern zu entnehmen.

5 Transport und Lagerung

5.1 Allgemein

a) Das Produkt nach Erhalt der Lieferung auf Transportschäden überprüfen.

b) Wird ein Transportschaden festgestellt, muss dieser unverzüglich dem Hersteller und dem Transportunternehmen mitgeteilt werden. Das Produkt muss dann ausgetauscht oder repariert werden.

c) Verpackungsmaterialen und verbrauchte Teile gemäß den lokalen Bestimmungen entsorgen.

5.2 Transport

⚠ WARNUNG

Herab- oder umfallende Lasten

Verletzungsgefahr beim Transport von großen und schweren Lasten.

a) Nur geeignete Transportmittel und Hebezeuge mit ausreichender Tragfähigkeit verwenden.

b) Hebezeuge nur an geeigneten Stellen der Last anbringen.

c) Hebezeuge so anbringen, dass sie nicht verrutschen können.

d) Schwerpunkt der Last beachten.

e) Ruckartige Bewegungen, Stöße und starke Erschütterungen während des Transports vermeiden.

f) Nicht unter schwebenden Lasten treten, nicht unter schwebenden Lasten arbeiten.

HINWEIS

Zum Transport des Produkts können Ringschrauben in die Gewinde der Flanschanschlüsse geschraubt werden.

5.3 Lagerung

Das Produkt wird im Werk mit mineralischem Hydrauliköl auf seine Funktion überprüft. Danach werden die Anschlüsse verschlossen. Das verbleibende Restöl konserviert die Innenteile bis zu 6 Monate.

Metallisch blanke Außenteile sind durch geeignete Konservierungsmaßnahmen ebenfalls bis zu 6 Monate gegen Korrosion geschützt.

Bei der Lagerung ist auf eine trockene, staubfreie und schwingungsarme Umgebung zu achten. Das Produkt ist vor Witterungseinflüssen, Feuchtigkeit und starken Temperaturschwankungen zu schützen. Die empfohlenen Lagerbedingungen sind einzuhalten.

Unterhalb der zulässigen Umgebungstemperatur ϑ_U verlieren Elastomer-Dichtungen ihre Elastizität und mechanische Belastbarkeit, da die Glasübergangstemperatur unterschritten wird. Dieser Vorgang ist reversibel. Eine Krafteinwirkung auf das Produkt ist bei Lagerung unterhalb der zulässigen Umgebungstemperatur ϑ_U zu vermeiden.

Produkte mit EPDM-Dichtungen sind nicht mineralölbeständig und werden nicht auf ihre Funktion überprüft. Es erfolgt keine Konservierung der Innenteile. Wird das Produkt nicht sofort in Betrieb genommen, sind alle korrosionsgefährdeten Oberflächen durch geeignete Konservierungsmaßnahmen zu schützen. Gleiches gilt für Produkte, die aus anderen Gründen nicht geprüft werden.

Bei Lagerung über einen längeren Zeitraum (> 6 Monate) sind alle korrosionsgefährdeten Oberflächen mit geeigneten Konservierungsmitteln nachzubehandeln.

Ist mit hoher Luftfeuchtigkeit oder aggressiver Atmosphäre zu rechnen, sind zusätzliche geeignete korrosionsverhindernde Maßnahmen zu treffen.

HINWEIS

Lagerung im Korrosionsschutzbeutel (VCI) maximal 6 Monate.

⚠ ACHTUNG!

Korrosion/chemischer Angriff

Nicht sachgemäße Lagerung kann das Produkt unbrauchbar machen.

a) Gefährdete Oberflächen durch geeignete Konservierungsmaßnahmen schützen.

b) Empfohlene Lagerbedingungen einhalten.

5.4 Lagerbedingungen

TIPP

Empfohlene Lagerbedingungen

a) Lagerungstemperatur: 5 °C – 25 °C

b) Relative Luftfeuchtigkeit: < 70 %

c) Elastomerteile vor Licht, insbesondere direktem Sonnenlicht schützen.

d) Elastomerteile vor Sauerstoff und Ozon schützen.

e) Maximale Lagerzeit von Elastomerteilen beachten:

- ⇨ 5 Jahre: AU (Polyurethan-Kautschuk)
- ⇨ 7 Jahre: NBR, HNBR, CR
- ⇨ 10 Jahre: EPM, EPDM, FEP/PFTE, FEPM, FKM, FFKM, VMQ, FVMQ

6 Installation

6.1 Sicherheitshinweise für die Installation

⚠ GEFAHR

Gefährliche Flüssigkeiten

Lebensgefahr beim Umgang mit gefährlichen Flüssigkeiten.

a) Sicherheitsdatenblätter und Vorschriften zur Handhabung gefährlicher Flüssigkeiten beachten.

b) Gefährliche Flüssigkeiten so auffangen und entsorgen, dass keine Gefährdung für Personen oder Umwelt entsteht.

⚠ GEFAHR

Rotierende Teile

Lebensgefahr durch Erfassen oder Aufwickeln von Körperteilen, Haaren oder Kleidungsstücken.

a) Vor allen Arbeiten vorhandene Antriebe spannungs- bzw. drucklos machen.

b) Das Wiederanlaufen während der Arbeiten sicher unterbinden.

⚠ GEFAHR

Rotierende Teile

Lebensgefahr durch Erfassen oder Aufwickeln von Körperteilen, Haaren oder Kleidungsstücken.

a) Maßnahmen gegen unbeabsichtigtes Berühren von rotierenden Teilen treffen.

⚠ WARNUNG

Rotierende Teile

Verletzungsgefahr durch umherfliegende Teile.

a) Rotierende Teile so einhausen, dass bei Bruch oder Fehlfunktion keine Gefahr durch umherfliegende Teile besteht.

⚠ WARNUNG

Offenliegende Zahnräder

Zahnräder können Finger und Hände einziehen und zerquetschen.

a) Nicht in die Zahnräder greifen.

⚠ WARNUNG

Versagen drucktragender Teile durch Überlast

Verletzungsgefahr durch umherfliegende Teile.
Verletzungsgefahr durch herausspritzende Flüssigkeit.

a) Vor allen Arbeiten das Produkt und alle Anschlussleitungen drucklos machen.

b) Den Wiederaufbau des Drucks während der Arbeiten sicher unterbinden.

⚠ WARNUNG

Versagen drucktragender Teile durch Überlast

Verletzungsgefahr durch umherfliegende Teile.
Verletzungsgefahr durch herausspritzende Flüssigkeit.

a) Nur Anschlüsse und Leitungen verwenden, die für den zu erwartenden Druckbereich zugelassen sind.

b) Ein Überschreiten der zulässigen Drücke sicher verhindern, z.B. durch den Einsatz von Druckbegrenzungsventilen oder Berstscheiben.

c) Rohrleitungen so ausführen, dass auch während des Betriebs keine Spannungen, z.B. durch Längenänderung aufgrund von Temperaturschwankungen, auf das Produkt übertragen werden.

6.2 Geräuschreduzierung

TIPP

Maßnahmen zur Geräuschreduzierung

a) Einsatz von Saug- und Druckschläuchen,

b) Einsatz von Pumpenträgern mit hohen Dämpfungseigenschaften (Kunststoff oder Grauguss)

c) Einsatz von Dämpfungsringen und Dämpfungsschienen zur Körperschalltrennung.

6.3 Mechanischer Einbau

6.3.1 Vorbereitung

a) Das Produkt auf Transportschäden und Verunreinigungen überprüfen.
b) Das Produkt auf Leichtgängigkeit prüfen.
c) Vorhandene Konservierungsmittel entfernen.
d) Alle Leitungen reinigen.
   ⇨ Nur Reinigungsmittel verwenden, die mit den verwendeten Werkstoffen verträglich sind.
   ⇨ Keine Putzwolle verwenden.
e) Die Umwelt- und Umgebungsbedingungen am Einsatzort mit den zulässigen Bedingungen vergleichen.
   ⇨ Auf ein ausreichend stabiles und ebenes Fundament achten.
   ⇨ Das Produkt nur geringen Schwingungen aussetzen, siehe IEC 60034-14.
   ⇨ Eine ausreichende Zugänglichkeit für Wartung und Instandsetzung sicherstellen.
f) Das Produkt positionieren und gegen Verrutschen sichern.
   ⇨ Herstellerangaben beachten.
   ⇨ Keine Dichtmittel wie z.B. Hanf, Teflonband oder Kitt verwenden.
g) Vorhandene Schutzstopfen entfernen.

6.3.2 Zahnradpumpen mit freiem Wellenende

Voraussetzung für den störungsfreien Betrieb ist eine geeignete Kraftübertragung zwischen Pumpe und Antrieb.

Standardmäßig wird hierfür eine drehelastische Klauenkupplung eingesetzt.

a) Die Kupplungsteile nach Herstellerangaben vormontieren.
b) Die Pumpe und den Antrieb zueinander positionieren.
   ⇨ Die zulässige Einbaulage beachten.
   ⇨ Die zulässige Drehrichtung beachten.
c) Sämtliche Befestigungsschrauben mit dem vorgeschriebenen Drehmoment anziehen.

⚠ GEFAHR

Rotierende Teile

Lebensgefahr durch Erfassen oder Aufwickeln von Körperteilen, Haaren oder Kleidungsstücken.

a) Maßnahmen gegen unbeabsichtigtes Berühren von rotierenden Teilen treffen.

⚠ VORSICHT

Heiße Oberflächen

Verbrennungen der Haut bei Berührung.

a) Bei Temperaturen ≥ 48 °C Schutzhandschuhe tragen.

Anziehdrehmoment [Nm]							
Gewindegröße	**M6**	**M8**	**M10**	**M12**	**M16**	**M20**	**M24**
Gegengewinde Aluminium	4,6	11	22	39	95	184	315
Gegengewinde Gusseisen / Stahl	10	25	49	85	210	425	730
(1) *Schrauben/Muttern mit min. Festigkeitsklasse 8.8/8*							

HINWEIS

a) Die zulässigen Verlagerungswerte der Kupplung einhalten.

b) Ein Verspannen des Produkts ausschließen.

c) Auf eine ausreichende Einschraubtiefe der Befestigungsschrauben achten.

HINWEIS

a) Bei Produkten ohne Wellenabdichtung sicherstellen, dass das Lecköl aus dem Wellenabdichtungsraum gezielt abgeführt wird und nicht in die Umwelt gelangt.

b) Sicherstellen, dass keine Fremdkörper in das Produkt gelangen können.

c) Bei Produkten mit Flüssigkeitsvorlage einen Behälter zur Aufnahme der Vorlageflüssigkeit montieren.

- ⇨ Den Behälter oberhalb des Produkts montieren.
- ⇨ Der Anschluss am Gerät muss nach oben zeigen.
- ⇨ Eine Kontrolle des Flüssigkeitsniveaus muss jederzeit möglich sein.

6.4 Anschlussleitungen

6.4.1 Allgemein

⚠ WARNUNG

Versagen drucktragender Teile durch Überlast

Verletzungsgefahr durch umherfliegende Teile.
Verletzungsgefahr durch herausspritzende Flüssigkeiten.

a) Nur Anschlüsse und Leitungen verwenden, die für den zu erwartenden Druckbereich zugelassen sind.

b) Ein Überschreiten der zulässigen Drücke sicher verhindern, z.B. durch den Einsatz von Druckbegrenzungsventilen oder Berstscheiben.

c) Rohrleitungen so ausführen, dass auch während des Betriebs keine Spannungen, z.B. durch Längenänderung aufgrund von Temperaturschwankungen, auf das Produkt übertragen werden.

HINWEIS

Zusätzliche Anschlüsse

a) Möglichst nah am Gerät Messanschlüsse für Druck und Temperatur vorsehen.

b) Bei Bedarf eine Möglichkeit zum Befüllen bzw. Entleeren von Gerät und Leitungssystem vorsehen.

c) Bei Bedarf eine Möglichkeit zum Entlüften von Gerät und Leitungssystem vorsehen.

6.4.2 Saugleitung

Eine nicht optimal geplante Saugleitung kann zu erhöhter Geräuschemission, Kavitation sowie zu einer Verminderung der Fördermenge (bedingt durch Minderfüllung der Pumpe) führen.

Bei der Konzipierung der Leitung folgende Punkte beachten:

- Die Saugleitung möglichst kurz und gradlinig verlegen.
- Die Nennweite der Saugleitung so festlegen, dass der zulässige Betriebsdruck $p_{e\,min}$ auf der Saugseite nicht unterschritten wird.
- Große Ansaughöhen vermeiden.
- Zusätzliche Druckverluste durch Leitungswiderstände, wie Armaturen, Verschraubungen, Formteile oder Saugfilter/Saugkörbe vermeiden. Technisch notwendige Saugfilter/Saugkörbe ausreichend dimensionieren.
- Auf einen ausreichenden Abstand der Saugöffnung zu Boden und Wänden des Medienbehälters achten.
- Sicherstellen, dass die Saugöffnung in jeder Betriebssituation unterhalb des tiefsten Flüssigkeitsspiegels liegt.
- Bei der Verwendung von Schlauchleitungen auf eine ausreichende Stabilität der Schläuche achten, sodass sie durch die Saugwirkung nicht eingeschnürt werden.

– Die empfohlene Strömungsgeschwindigkeit in der Saugleitung beachten (max. 1,5 m/s).

Saugleitung bei Vakuumbetrieb

Soll aus einem unter Vakuum stehenden Behälter angesaugt werden, so ist die Pumpe ca. 1 m unterhalb des Behälters anzuordnen. Die Saugleitung muss gradlinig und ohne Widerstände verlegt sein.

Der Behälter darf erst dann mit Vakuum beaufschlagt werden, wenn das Leitungssystem und die Pumpe mit Flüssigkeit gefüllt sind. Für diesen Einsatz dürfen nur für Vakuumbetrieb geeignete Pumpen verwendet werden.

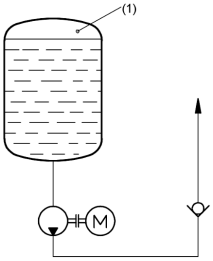

HINWEIS

Kavitationsschäden

Ein Unterschreiten des zulässigen saugseitigen Drucks hat Kavitation zur Folge

a) Die Saugleitung so konzipieren, dass der sich im Betrieb einstellende Druck auf der Saugseite immer höher ist als der Dampfdruck des Fördermediums. Dabei auch die Aufstellhöhe des Geräts über Normalnull beachten.

b) Bei wasserhaltigen Flüssigkeiten das Gerät unterhalb des Flüssigkeitsspiegels montieren, die Betriebstemperatur auf 50 °C und die Drehzahl auf 1500 1/min begrenzen.

Vermeidung von Ansaugproblemen

Besteht die Möglichkeit, dass die Saugleitung während des Stillstands leerlaufen kann, ist eine Möglichkeit Ansaugprobleme zu vermeiden, die Verlegung der Saugleitung als Siphon. Dadurch bleibt die Pumpe nach der Erstinbetriebnahme ständig gefüllt.

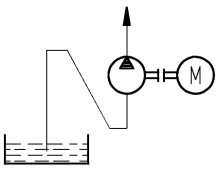

Bei längeren Saugleitungen, die während des Stillstands leerlaufen können, ist es zweckmäßig, ein Fußventil bzw. eine Rückschlagklappe einzusetzen. Diese müssen für den Einsatz in Saugleitungen konzipiert sein und einen möglichst geringen Durchflusswiderstand aufweisen.

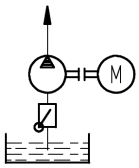

Bei Betrieb einer Pumpe, die über ein Rückschlagventil in einen unter Druck stehenden Kreislauf (z.B. Reservepumpe in einem Schmierkreislauf) fördern muss, können Ansaugschwierigkeiten entstehen, wenn die Saugleitung mit Luft gefüllt ist.

In diesem Fall muss die Druckleitung unmittelbar vor dem Rückschlagventil entlüftet werden.

Wird keine Entlüftungsdüse eingesetzt, muss das Volumen der Druckleitung zwischen Pumpe und Rückschlagventil mindestens 75% des Saugleitungsvolumens betragen.

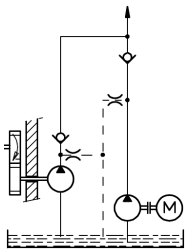

6.4.3 Druckleitung

Bei der Konzipierung der Leitung folgende Punkte beachten:

- Die Nennweite der Druckleitung so wählen, dass die maximal zulässigen Drücke nicht überschritten werden.
- Bei Bedarf eine Entlüftungsdüse zur Vermeidung von Ansaugproblemen vorsehen.

6.4.4 Montage Anschlussleitung

a) Alle Leitungen reinigen.
   ⇨ Keine Putzwolle verwenden.
   ⇨ Verschweißte Rohre beizen und spülen.
b) Vorhandene Schutzstopfen entfernen.
c) Die Leitungen montieren.
   ⇨ Herstellerangaben beachten.
   ⇨ Keine Dichtmittel wie z.B. Hanf, Teflonband oder Kitt verwenden.

TIPP

Lage der Geräteanschlüsse: **Dreh- und Förderrichtung** [▸ 17]

6.5 Drehrichtungsänderung

Abhängig von der Ausführung ist eine Drehrichtungsänderung möglich.

Der Umbau erfolgt im Allgemeinen durch den Hersteller und sollte nur in Ausnamefällen kundenseitig durchgeführt werden. Hierzu Rücksprache mit dem Hersteller halten.

TIPP

Bei Zahnradpumpen mit Sondernummern ist eine mögliche Drehrichtungsänderung zu prüfen.

TIPP

Bei der Zahnradpumpen KF 6/730 ist eine Drehrichtungsänderung nicht möglich. Das Produkt muss ausgetauscht werden.

7 Inbetriebnahme

7.1 Sicherheitshinweise für die Inbetriebnahme

⚠ GEFAHR

Gefährliche Flüssigkeiten

Lebensgefahr beim Umgang mit gefährlichen Flüssigkeiten.

a) Sicherheitsdatenblätter und Vorschriften zur Handhabung gefährlicher Flüssigkeiten beachten.

b) Gefährliche Flüssigkeiten so auffangen und entsorgen, dass keine Gefährdung für Personen oder Umwelt entsteht.

⚠ WARNUNG

Versagen drucktragender Teile durch Überlast

Verletzungsgefahr durch umherfliegende Teile.
Verletzungsgefahr durch herausspritzende Flüssigkeit.

a) Das Produkt nicht gegen geschlossene Absperrorgane betreiben.

b) Das Produkt nicht in der falschen Drehrichtung betreiben.

⚠ VORSICHT

Heiße Oberflächen

Verbrennungen der Haut bei Berührung.

a) Bei Temperaturen ≥ 48 °C Schutzhandschuhe tragen.

7.2 Vorbereitung

a) Vor dem Start der Anlage sicherstellen, dass eine ausreichende Menge des Betriebsmediums vorhanden ist, um Trockenlauf zu vermeiden. Dies ist besonders bei großem Leitungsvolumen zu berücksichtigen.

b) Alle Befestigungsschrauben am Gerät überprüfen.

c) Die Pumpe und die Saugleitung mit Medium befüllen.

7.3 Befüllung Quenchraum

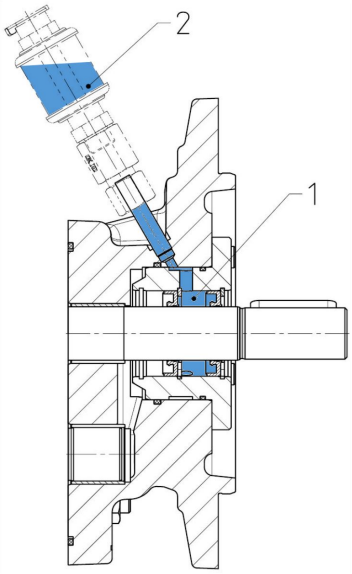

1 Quenchraum
2 Behälter für Vorlageflüssigkeit

a) Bei Ausführungen mit Flüssigkeitsvorlage den Quenchraum mit einer geeigneten Vorlageflüssigkeit befüllen.
   ⇨ Die Befüllung erfolgt durch den dafür vorgesehenen Behälter.
   ⇨ So viel Flüssigkeit einfüllen, dass der Quenchraum ganz und der Behälter zur Hälfte befüllt ist.
b) Den Quenchraum nicht mit Druck oder Vakuum beaufschlagen.

HINWEIS

Dichtungsausfall durch Trockenlauf

Fehlende Vorlageflüssigkeit kann zu einem Ausfall der Dichtung führen.

a) Die Pumpe nicht ohne Vorlageflüssigkeit in Betrieb nehmen.

7.4 Einstellung Druckventil

Die Ventile sind werksseitig auf den Nenndruck der jeweiligen Druckstufe eingestellt. Davon abweichende Einstelldrücke sind auf dem Typenschild angegeben.

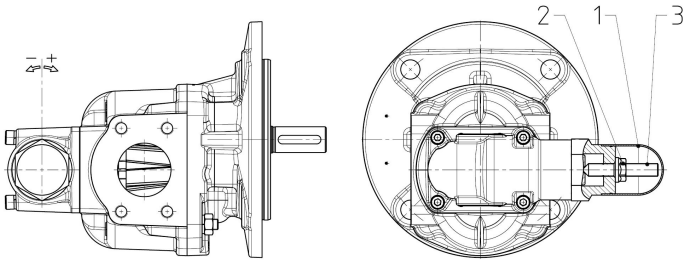

- Ansprechdruck niedriger
+ Ansprechdruck höher

1 Einstellschraube
2 Sechskantmutter
3 Abdeckung

a) Abdeckung entfernen.
b) Sechskantmutter lösen.
c) Ansprechdruck mit Einstellschraube einstellen.
d) Einstellschraube mit Sechskantmutter sichern.
e) Abdeckung aufstecken.

⚠ WARNUNG

Versagen drucktragender Teile durch Überlast

Verletzungsgefahr durch umherfliegende Teile.
Verletzungsgefahr durch herausspritzende Flüssigkeit.

a) Den zulässigen Druckeinstellbereich des Ventils beachten.
b) Druckeinstellung kontrollieren (Ventil darf nicht blockieren).

7.4.1 Druckbegrenzungsventil

Direkt angebaute Druckbegrenzungsventil der Baureihe D dienen ausschließlich zur Absicherung der Zahnradpumpe und dürfen nur kurzzeitig ansprechen.

HINWEIS

Ausfall der Zahnradpumpe

Ein längeres Ansprechen des Ventils kann die Zahnradpumpe überhitzen.

a) Das Ventil nur kurzzeitig ansprechen lassen.

7.5 Weitere Inbetriebnahme

a) Vorhandene Absperrelemente vor und hinter dem Produkt öffnen.
b) Im System installierte Druckbegrenzungsventile auf niedrigsten Öffnungsdruck einstellen.
c) Das Produkt ohne bzw. mit geringer Druckbelastung anlaufen lassen (Tippbetrieb).
   ⇨ Nach max. 30 s muss sich ein Durchfluss eingestellt haben.
d) Das Produkt einige Minuten drucklos oder mit geringem Druck betreiben.
e) Das System möglichst an der höchsten Stelle entlüften.
f) Die Druckbelastung stufenweise bis zum gewünschten Betriebsdruck steigern.
g) Das System so lange betreiben, bis der endgültige Betriebszustand erreicht ist.
h) Die Betriebsdaten kontrollieren.
   ⇨ **Wartungstabelle** [▸ 54]
i) Die Betriebsdaten der Erstinbetriebnahme zum späteren Vergleich dokumentieren.
j) Den Niveaustand des Betriebsmediums in der Anlage überprüfen.
k) Den Füllstand der Vorlageflüssigkeit (wenn vorhanden) überprüfen.
l) Das Produkt auf Undichtigkeiten überprüfen.
m) Alle Verschraubungen auf Leckagen überprüfen und bei Bedarf nachziehen.

TIPP

Um eine konstante und zuverlässige Funktion des Produkts sicherzustellen, wird eine erstmalige Wartung des Produkts nach mehreren Stunden Einlaufzeit (max. 24 h) empfohlen. Störungen können so frühzeitig erkannt werden.

8 Demontage

8.1 Sicherheitshinweise für die Demontage

⚠ GEFAHR

Gefährliche Flüssigkeiten

Lebensgefahr beim Umgang mit gefährlichen Flüssigkeiten.

a) Sicherheitsdatenblätter und Vorschriften zur Handhabung gefährlicher Flüssigkeiten beachten.

b) Gefährliche Flüssigkeiten so auffangen und entsorgen, dass keine Gefährdung für Personen oder Umwelt entsteht.

⚠ GEFAHR

Rotierende Teile

Lebensgefahr durch Erfassen oder Aufwickeln von Körperteilen, Haaren oder Kleidungsstücken.

a) Vor allen Arbeiten vorhandene Antriebe spannungs- bzw. drucklos machen.

b) Das Wiederanlaufen während der Arbeiten sicher unterbinden.

⚠ WARNUNG

Offenliegende Zahnräder

Zahnräder können Finger und Hände einziehen und zerquetschen.

a) Nicht in die Zahnräder greifen.

⚠ WARNUNG

Versagen drucktragender Teile durch Überlast

Verletzungsgefahr durch umherfliegende Teile.
Verletzungsgefahr durch herausspritzende Flüssigkeit.

a) Vor allen Arbeiten das Produkt und alle Anschlussleitungen drucklos machen.

b) Den Wiederaufbau des Drucks während der Arbeiten sicher unterbinden.

⚠ VORSICHT

Heiße Oberflächen

Verbrennungen der Haut bei Berührung.

a) Bei Temperaturen ≥ 48 °C das Produkt erst abkühlen lassen.

⚠ ACHTUNG!

Blockieren des Produkts durch aushärtendes Medium

Aushärtendes Medium kann das Produkt mechanisch blockieren und unbrauchbar machen.

a) Nach dem Betrieb mit aushärtendem Medium das Produkt unverzüglich reinigen.

8.2 Demontage

a) Das System drucklos und spannungslos machen

b) Vorhandene Absperrelemente vor und hinter dem Produkt schließen

c) Vorhandene Ablasselemente öffnen und Anschlussleitungen lösen. Auslaufendes Medium so auffangen und entsorgen, dass keine Gefährdung für Personen oder Umwelt entsteht

d) Das Produkt demontieren

e) Produkt reinigen

f) Die Prozessanschlüsse und Leitungen gegen das Eindringen von Schmutz verschließen

HINWEIS

Das konkrete Vorgehen zur Reinigung ist abhängig vom verwendeten Medium.

a) Siehe dazu das Sicherheitsdatenblatt des verwendeten Mediums.

9 Wartung

9.1 Sicherheitshinweise für die Wartung

⚠ GEFAHR

Gefährliche Flüssigkeiten

Lebensgefahr beim Umgang mit gefährlichen Flüssigkeiten.

a) Sicherheitsdatenblätter und Vorschriften zur Handhabung gefährlicher Flüssigkeiten beachten.

b) Gefährliche Flüssigkeiten so auffangen und entsorgen, dass keine Gefährdung für Personen oder Umwelt entsteht.

⚠ GEFAHR

Rotierende Teile

Lebensgefahr durch Erfassen oder Aufwickeln von Körperteilen, Haaren oder Kleidungsstücken.

a) Vor allen Arbeiten vorhandene Antriebe spannungs- bzw. drucklos machen.

b) Das Wiederanlaufen während der Arbeiten sicher unterbinden.

⚠ WARNUNG

Versagen drucktragender Teile durch Überlast

Verletzungsgefahr durch umherfliegende Teile.
Verletzungsgefahr durch herausspritzende Flüssigkeit.

a) Vor allen Arbeiten das Produkt und alle Anschlussleitungen drucklos machen.

b) Den Wiederaufbau des Drucks während der Arbeiten sicher unterbinden.

⚠ VORSICHT

Heiße Oberflächen

Verbrennungen der Haut bei Berührung.

a) Bei Temperaturen ≥ 48 °C das Produkt erst abkühlen lassen.

9.2 Wartungsarbeiten

TIPP

Kontrolle und Dokumentation der Betriebsdaten

Regelmäßige Kontrolle und Dokumentation aller Betriebsdaten trägt dazu bei, Störungen frühzeitig zu erkennen.

- Die Wartungsarbeiten gemäß Vorgabe durchführen.
- Defekte bzw. verschlissene Bauteile austauschen.
- Bei Bedarf Ersatzteillisten und Zusammenbauzeichnungen beim Hersteller anfordern.
- Art und Umfang der Wartungsarbeiten sowie die Betriebsdaten dokumentieren.
- Die Betriebsdaten mit den Werten der Erstinbetriebnahme vergleichen.
  Bei größeren Abweichungen (> 10 %) die Ursache ermitteln.
- Verpackungsmaterialien und verbrauchte Teile gemäß den lokalen Bestimmungen entsorgen.

HINWEIS

Schutzeinrichtungen und Hinweise

Nach Wartung und/oder Instandsetzung alle dabei entfernten Schutzeinrichtungen und Hinweise wieder in der ursprünglichen Lage anbringen.

9.3 Wartungshinweise

Die nachstehenden Angaben geben Empfehlungen zu Wartungsarbeiten und Wartungsintervallen für das eingesetzte Produkt.

Abhängig von den tatsächlich auftretenden Belastungen im Betrieb können Art, Umfang und Intervall der Wartungsarbeiten von den Empfehlungen abweichen. Ein verbindlicher Wartungsplan ist durch den Errichter/Betreiber zu erstellen.

TIPP

Im Rahmen einer vorbeugenden Instandhaltung ist es sinnvoll, Verschleißteile vor Erreichen der Verschleißgrenze auszutauschen.

Bei entsprechendem Know-how und ausreichender Ausrüstung kann die Reparatur auch vom Errichter/Betreiber vorgenommen werden.
Bei Bedarf Ersatzteillisten und Zusammenbauzeichnungen beim Hersteller anfordern.
Hierzu Rücksprache mit dem Hersteller halten.

HINWEIS

Gewährleistung

Bei nicht sachgerechter Ausführung erlischt jegliche Gewährleistung.

9.4 Wartungstabelle

Wartungstabelle

		Erstmalig: nach max. 24 h	Täglich	3000 Betriebsstunden	6000 Betriebsstunden	nach Bedarf	Weiterführende Informationen
9.4.1	Kontrolle Förderstrom	2					
9.4.2	Kontrolle Betriebsdruck	2					
9.4.3	Kontrolle Medientemperatur	2					
9.4.4	Kontrolle Gerätetemperatur	2					
9.4.5	Kontrolle Funktion Anbauventil	2					
9.4.6	Kontrolle Potenzialausgleich	2					
9.4.7	Kontrolle Zustand Betriebsflüssigkeit	2					
9.4.8	Hörkontrolle Ungewöhnliche Geräusche		1				
9.4.9	Reinigung		1				
9.4.10	Sichtkontrolle Leckage		1				
9.4.11	Sichtkontrolle Füllstand Vorlageflüssigkeit		2				
9.4.1	Kontrolle Förderstrom			2			
9.4.2	Kontrolle Betriebsdruck			2			
9.4.3	Kontrolle Medientemperatur			2			
9.4.4	Kontrolle Gerätetemperatur			2			
9.4.5	Kontrolle Funktion Anbauventil			2			
9.4.6	Kontrolle Potenzialausgleich			2			
9.4.7	Kontrolle Zustand Betriebsflüssigkeit			2			
9.4.12	Sichtkontrolle Zustand Getriebe				3		
9.4.13	Sichtkontrolle Zustand Gehäuseteile				3		
9.4.14	Sichtkontrolle Zustand Gleitlager				3		
9.4.15	Sichtkontrolle Zustand Wellenabdichtung				3		
9.4.16	Sichtkontrolle Zustand Vorsatzlager				3		
9.4.17	Austausch Vorsatzlager					3	
9.4.19	Austausch Wellenabdichtung					3	
9.4.20	Austausch Sonstige Dichtungen					3	

1 - 0,1 h; 2 - 0,2 h; 3 - 0,75 h

9.4.1 Kontrolle Förderstrom

Der Förderstrom wird über die Durchfluss-Volumenzähler gemessen.

Die Werte zeigt der Einbau-Controller in der elektrischen Steuerung an.

- Bei fehlendem Förderstrom müssen die Einzelkomponenten des Produkts überprüft werden.
- Die produktspezifischen Datenblätter/Betriebsanleitungen sind zu beachten.

9.4.2 Kontrolle Betriebsdruck

Der Betriebsdruck wird über die Manometer angezeigt.

- Bei fehlendem Betriebsdruck müssen die Einzelkomponenten des Produkts überprüft werden.
- Die produktspezifischen Datenblätter/Betriebsanleitungen sind zu beachten.

9.4.3 Kontrolle Medientemperatur

Die Medientemperatur wird über den Temperatursensor gemessen.

Die Werte zeigt der Einbau-Controller in der elektrischen Steuerung an.

- Bei zu hoher oder zu niedriger Medientemperatur müssen die Einzelkomponenten des Produkts überprüft werden.
- Die produktspezifischen Datenblätter/Betriebsanleitungen sind zu beachten.

9.4.4 Kontrolle Gerätetemperatur

Die Oberflächentemperatur im Bereich der Lager messen.

9.4.5 Kontrolle Funktion Anbauventil

Anbauventile müssen in regelmäßigen Abständen betätigt werden. Nur so ist eine einwandfreie Funktion sichergestellt.

9.4.6 Kontrolle Potenzialausgleich

Potenzialausgleich auf festen Sitz und Funktion überprüfen

9.4.7 Kontrolle Zustand Betriebsflüssigkeit

Hierbei ist auf Farbe (Dunkelfärbung), Geruch und milchige Trübung zu achten.

- Betriebsflüssigkeit bei entsprechender Veränderung austauschen.

9.4.8 Hörkontrolle Ungewöhnliche Geräusche

Hierbei ist auf ein erhöhtes Geräusch oder ungleichmäßigen Lauf (Pumpeneinheit) zu achten.

- Bei ungewöhnlichen Geräuschen müssen die Einzelkomponenten des Produkts und Leitungsbefestigungen untersucht werden und das Betriebsmedium auf Schaumbildung überprüft werden.
- Die produktspezifischen Datenblätter/Betriebsanleitungen sind zu beachten.

9.4.9 Reinigung

Staubablagerungen und Schmutz mit einem feuchten, sauberen Lappen entfernen.

9.4.10 Sichtkontrolle Leckage

Hierbei ist auf eine Leckage von Anschlussverbindungen zu achten.

- Bei Undichtigkeiten der Anschlussverbindungen müssen die Verschraubungen nachgezogen und gegebenenfalls die Dichtungen ausgetauscht werden.

9.4.11 Sichtkontrolle Füllstand Vorlageflüssigkeit

Hierbei ist auf den Füllstand der Vorlageflüssigkeit zu achten. Bei Bedarf muss ein Nachfüllen der Vorlageflüssigkeit erfolgen.

Falls keine automatische Überwachung stattfindet, muss der Füllstand mindestens zu jedem Schichtbeginn kontrolliert werden.

Wenn der Füllstand innerhalb kurzer Zeit ungewöhnlich schnell absinkt, kann die äußere oder die innere Wellenabdichtung undicht sein.

Wenn der Füllstand sich erhöht, ist wahrscheinlich die innere Wellenabdichtung undicht und das Sperrmedium ist mit dem Fördermedium versetzt.

- In beiden Fällen ist die Anlage sofort außer Betrieb zu nehmen.

9.4.12 Sichtkontrolle Zustand Getriebe

Wellen- und Bolzenrad gehören zu den Verschleißteilen. Bei übermäßigem Verschleiß ist ein Austausch der Teile oder der Pumpe notwendig.

Wichtige Kontrollstellen sind die Gegenlaufflächen von Wellendichtring und Lagerbuchsen, Stirnseiten von Wellen- und Bolzenrad sowie die Zahnflanken.

9.4.13 Sichtkontrolle Zustand Gehäuseteile

Wichtige Kontrollstellen sind die Stirnseiten der Radkammer.

9.4.14 Sichtkontrolle Zustand Gleitlager

Die Gleitlager gehören zu den Verschleißteilen. Bei übermäßigem Verschleiß ist ein Austausch der Teile oder der Pumpe notwendig.

Bei Mehrschicht-Gleitlagern ist die Verschleißgrenze erreicht, wenn die Bronzeschicht der Lager zu 50-70 % freigelegt ist.

Wellen- und Bolzenrad stützen sich unter Belastung saugseitig in den Lagern ab, so dass dort der Verschleiß zuerst erkennbar ist.

9.4.15 Sichtkontrolle Zustand Wellenabdichtung

Hierbei auf Leckagemengen und unzulässige Temperaturerhöhungen achten.

- Geringe Leckagemengen sind für die Funktion der Dichtung unerlässlich.
- Bei übermäßigen Leckagemengen oder unzulässiger Temperaturerhöhung ist die Pumpe sofort außer Betrieb zu nehmen.
  Die Dichtung austauschen.

9.4.16 Sichtkontrolle Zustand Vorsatzlager

Das Vorsatzlager gehört zu den Verschleißteilen.

Die Lebensdauer der Lager hängt in erster Linie von den Betriebsbedingungen ab.

Nach spätestens 4000 h sollte das Lager daher auf Schäden überprüft werden. Bei einer inakzeptablen Abnutzung muss das Lager ausgetauscht werden.

Ein beginnende Abnutzung oder ein bevorstehender Ausfall kann sich durch eine zunehmende Erwärmung des Lagers, einer erhöhten Leistungsaufnahme, nicht einwandfreien Laufverhalten oder auch an der Geräuschentwicklung bemerkbar machen.

9.4.17 Austausch Vorsatzlager

Bei entsprechendem Know-how und ausreichender Ausrüstung kann die Reparatur vom Errichter/Betreiber vorgenommen werden.

Dazu bei Bedarf Ersatzteillisten und Zusammenbauzeichnungen beim Hersteller anfordern.

Es dürfen nur vom Hersteller freigegebene Ersatzteile verwendet werden.

9.4.18 Austausch Gleitlager

Austausch geschieht ausschließlich durch den Hersteller.

Rücksprache mit dem Hersteller halten

9.4.19 Austausch Wellenabdichtung

Bei entsprechendem Know-how und ausreichender Ausrüstung kann die Reparatur vom Errichter/Betreiber vorgenommen werden.

Dazu bei Bedarf Ersatzteillisten und Zusammenbauzeichnungen beim Hersteller anfordern.

Es dürfen nur vom Hersteller freigegebene Ersatzteile verwendet werden.

9.4.20 Austausch Sonstige Dichtungen

Bei entsprechendem Know-how und ausreichender Ausrüstung kann die Reparatur vom Errichter/Betreiber vorgenommen werden.

Dazu bei Bedarf Ersatzteillisten und Zusammenbauzeichnungen beim Hersteller anfordern.

Es dürfen nur vom Hersteller freigegebene Ersatzteile verwendet werden.

10 Instandsetzung

10.1 Sicherheitshinweise für die Instandsetzung

⚠ GEFAHR

Gefährliche Flüssigkeiten

Lebensgefahr beim Umgang mit gefährlichen Flüssigkeiten.

a) Sicherheitsdatenblätter und Vorschriften zur Handhabung gefährlicher Flüssigkeiten beachten.

b) Gefährliche Flüssigkeiten so auffangen und entsorgen, dass keine Gefährdung für Personen oder Umwelt entsteht.

⚠ GEFAHR

Rotierende Teile

Lebensgefahr durch Erfassen oder Aufwickeln von Körperteilen, Haaren oder Kleidungsstücken.

a) Vor allen Arbeiten vorhandene Antriebe spannungs- bzw. drucklos machen.

b) Das Wiederanlaufen während der Arbeiten sicher unterbinden.

⚠ WARNUNG

Versagen drucktragender Teile durch Überlast

Verletzungsgefahr durch umherfliegende Teile.
Verletzungsgefahr durch herausspritzende Flüssigkeiten.

a) Vor allen Arbeiten das System drucklos machen.

b) Den Wiederaufbau des Drucks während der Arbeit sicher unterbinden.

⚠ VORSICHT

Heiße Oberflächen

Verbrennungen der Haut bei Berührung.

a) Bei Temperaturen ≥ 48 °C das Produkt erst abkühlen lassen.

10.2 Allgemein

Die Instandsetzung umfasst:

1. Fehlersuche
   Das Feststellen eines Schadens, Ermittlung und Lokalisierung der Schadensursache.
2. Schadensbehebung
   Die Behebung der primären Ursachen und Austausch oder Reparatur defekter Komponenten. Die Reparatur erfolgt im Allgemeinen durch den Hersteller.

Reparatur durch den Hersteller

Vor Rücksendung des Produkts das Rücksendeformular ausfüllen. Das Formular kann online ausgefüllt werden und steht als pdf-Datei zum Download bereit oder kann beim Hersteller angefragt werden.

HINWEIS

Gerät enthält Gefahrstoff

Wurde das Gerät mit gefährlichen Flüssigkeiten betrieben, muss es vor der Rücksendung gereinigt werden. Sollte dies nicht möglich sein, ist vorab das Sicherheitsdatenblatt des Gefahrstoffs bereitzustellen.

Reparatur durch den Errichter/Betreiber

Bei entsprechendem Know-how und ausreichender Ausrüstung kann die Reparatur auch vom Errichter/Betreiber vorgenommen werden. Hierzu Rücksprache mit dem Hersteller halten.

a) Bei Bedarf Ersatzteillisten und Zusammenbauzeichnungen beim Hersteller anfordern.
b) Nur vom Hersteller freigegebene Ersatzteile verwenden.
c) Verpackungsmaterialien und verbrauchte Teile gemäß den lokalen Bestimmungen entsorgen.

HINWEIS

Gewährleistung

Bei nicht sachgerechter Ausführung erlischt jegliche Gewährleistung.

HINWEIS

Schutzeinrichtungen und Hinweise

Nach Wartung und/oder Instandsetzung alle dabei entfernten Schutzeinrichtungen und Hinweise wieder in der ursprünglichen Lage anbringen.

10.3 Störungstabelle

Störung	Mögliche Ursachen	Mögliche Maßnahmen
Erhöhtes Geräusch		
Kavitation der Pumpe	Zu hoher Unterdruck (Minderfüllung der Pumpe)	Konzipierung Saugleitung überprüfen
		Geräuschoptimierte Pumpe verwenden
	Saugleitung verstopft	Saugleitung reinigen
	Saugfilter verstopft oder zu klein dimensioniert	Saugfilter reinigen oder größeren Filter verwenden
		Filterelement wechseln
	Saugkorb verstopft oder zu klein dimensioniert	Saugkorb reinigen oder größer dimensionieren
	Medientemperatur ist zu niedrig	Medium temperieren
Schaumbildung oder Luft im Medium	Pumpe saugt Luft	Ölniveau im Behälter überprüfen
		Saugleitung überprüfen
		Wellenabdichtung überprüfen
	Wellenabdichtung defekt	Wellenabdichtung austauschen
	Sauganschluss undicht	Verschraubungen nachziehen bzw. austauschen
		Dichtungen austauschen
	System nicht entlüftet	System entlüften
	Rücklaufleitung endet oberhalb des Flüssigkeitsniveaus	Rücklaufleitung verlängern
	Starkes Aufschäumen im System, z.B. bei Getrieben	Geräuschoptimierte Pumpe verwenden
Mechanische Schwingungen	Fehlerhaft ausgerichtete und/oder lose Kupplung	Ausrichtung der Kupplung Korrigieren und Kupplungshälften sichern
	Fehlerhafte und/oder ungenügende Leitungsbefestigung	Leitungen mit geeignetem Befestigungsmaterial (z.B. Rohrschellen) fixieren
	Flatterndes Druckbegrenzungsventil	Ventilöffnungsdruck erhöhen
	Kein geräuschreduzierter Aufbau	Dämpfungselemente einsetzen
Pumpe saugt nicht an		
	Trockenlauf	Die Pumpe und die Saugleitung mit Medium befüllen
	Mindestfüllstand im Vorratsbehälter unterschritten	Medium nachfüllen
	Falsche Drehrichtung	Drehrichtung korrigieren
	Gedrosseltes/geschlossenes Absperrelement in der Saugleitung	Absperrelement öffnen

	Saugleitung verstopft	Saugleitung reinigen
	Die in der Saugleitung befindliche Luft kann nicht in die Druckleitung verdichtet werden	Anfahrdruck reduzieren
		Druckleitung entlüften
		Volumen der Druckleitung vergrössern
	Drehzahl der Pumpe zu niedrig	Pumpenauslegung überprüfen
		Bei Frequenzumrichterbetrieb: Arbeits-/Netzfrequenz überprüfen
	Geodätische Saughöhe zu groß	Einbauort überpüfen
		Vorfüllpumpe vorsehen
Ungenügender Druck **Ungenügender Förderstrom**		
	Zu hoher Unterdruck (Minderfüllung der Pumpe)	Konzipierung Saugleitung überprüfen
	Zu hohe Medienviskosität	Vorfüllpumpe vorsehen
	Drehzahl der Pumpe zu niedrig	Pumpenauslegung überprüfen
		Bei Frequenzumrichterbetrieb: Arbeits-/Netzfrequenz überprüfen
	Gedrosseltes/geschlossenes Absperrelement in der Saugleitung	Absperrelement öffnen
	Saugleitung verstopft	Saugleitung reinigen
	Saugfilter verstopft oder zu klein dimensioniert	Saugfilter reinigen oder größeren Filter verwenden
		Filterelement wechseln
	Saugkorb verstopft oder zu klein dimensioniert	Saugkorb reinigen oder größer dimensionieren
	Ständiges Ansprechen eines direkt angebauten Druckbegrenzungsventil (wenn vorhanden)	Ventilöffnungsdruck erhöhen
	Pumpe saugt Luft	Ölniveau im Behälter überprüfen
		Saugleitung überprüfen
		Wellenabdichtung überprüfen
	Verschleiß	Gerät austauschen
Überhöhte Betriebstemperatur		
	Kühlung und Wärmeableitung ungenügend	Kühlleistung erhöhen
	Zu kleiner Ölvorrat im System	Behälterauslegung überprüfen
	Überschüssige Flüssigkeit wird über Druckbegrenzungsventil unter Belastung in den Vorratsbehälter gefördert	Pumpenauslegung überprüfen

Unzulässige Pumpenerwärmung		
	Ständiges Ansprechen eines direkt angebauten Druckbegrenzungsventil (wenn vorhanden)	Ventilöffnungsdruck erhöhen
	Zu hoher Druck in Verbindung mit zu niedriger Medienviskosität	Systemauslegung überprüfen
	Zu hohe Drehzahl in Verbindung mit zu hoher Medienviskosität	Systemauslegung überprüfen
	Stopfbuchsbrille zu stark angezogen (bei Stopfbuchsabdichtung)	Stopfbuchsbrille lösen und Leckage neu einstellen
	Zu hoher Vordruck	Druck reduzieren
	Verschleiß	Gerät austauschen
Leckage		
Dichtungsausfall	Mangelnde Wartung	Wartungsintervalle einhalten Dichtungen austauschen
	Mechanische Beschädigung	Dichtungen austauschen
	Thermische Überlastung	Betriebsdaten überprüfen Dichtungen austauschen
	Druck zu hoch	Betriebsdaten überprüfen Dichtungen austauschen
	Gasanteil im Medium zu hoch	Betriebsdaten überprüfen Dichtungen austauschen
	Korrosion/chemischer Angriff	Werkstoffverträglichkeit prüfen Dichtungen austauschen
	Falsche Drehrichtung	Drehrichtung korrigieren Dichtungen austauschen
	Verunreinigtes Medium	Filtration vorsehen Dichtungen austauschen
	Stopfbuchsbrille nicht ausreichend angezogen (bei Stopfbuchsbrillenabdchtung)	Stopfbuchsbrille nachziehen
	Lose Verschraubung	Verschraubungen nachziehen bzw. austauschen

Kupplung		
Kupplungsverschleiß	Ausrichtfehler	Ausrichtung der Kupplung Korrigieren und Kupplungshälften sichern
	Zahnkranz überlastet	Betriebsdaten überprüfen Härteren Zahnkranz einsetzen
Nockenbruch	Zahnkranzverschleiß Drehmomentübertragung durch Metallkontakt	Wartungsintervalle anpassen Kupplung austauschen
Vorzeitiger Zahnkranzverschleiß	Ausrichtfehler	Ausrichtung der Kupplung Korrigieren und Kupplungshälften sichern Zahnkranz austauschen
	Zahnkranzausfall durch chemischen Angriff	Werkstoffverträglichkeit prüfen Zahnkranz austauschen
Motorschutzschalter löst aus		
	Antriebsleistung zu gering	Antriebsauslegung überprüfen
	Motor falsch angeschlossen	Motoranschluss überprüfen
	Phasenausfall	Einspeisung/Versorgung überprüfen
	Stromaufnahme zu hoch	Betriebsdaten überprüfen
		Drehrichtung überprüfen
	Motorschutzschalter falsch ausgelegt	Betriebsdaten überprüfen
Bei nicht identifizierbaren Störungen Rücksprache mit dem Hersteller halten.		

A.3.1.2 Declaration of Conformity

13 Declaration of Conformity

EU DECLARATION OF CONFORMITY (D.0034460002)

to confirm the conformance of a device with the Directive 2014/34/EU

Manufacturer	KRACHT GmbH Gewerbestraße 20 58791 Werdohl Germany	
Product	KF 3/. - 6/. - ATEX Serial number as per the rating plate	Gear pump

We herewith declare under sole responsibility that the above-stated product conforms with the provisions of the following harmonised standards of the European Union:

EN 1127-1:2011	Explosive atmospheres - Explosion prevention and protection - Part 1: Basic concepts and methodology
EN 13463-1:2009	Non-electrical equipment for use in potentially explosive atmospheres - Part 1: Basic concepts and methodology
EN 13463-5:2011	Non-electrical equipment for use in potentially explosive atmospheres - Part 5: Protection by constructional safety 'c'
EN 13463-8:2003	Non-electrical equipment for use in potentially explosive atmospheres - Part 8: Protection by liquid immersion 'k'
EN ISO 12100:2010	Safety of machines – General Structuring Directives of Risk Assessment and Risk Reduction

The product also conforms with the following European and national standards and technical regulations:

TRBS 2153:2009	Technical Rules for Workplace Safety - Prevention of ignition hazards due to electrostatic charges

Marking in accordance Ex II 2G ck T4

Werdohl, 20.06.2016
place and date of issue

i.V.
Signed for and on behalf of KRACHT GmbH
Holger Kirsebauer
Development and Design Manager

A.3.1.3 Gear pump

Name	Data
Designation	Gear pump
Type	SF3/32 RD
Number	
Type of manual	*Technical documentation*
Manufacturer	Gebr. Steimel GmbH & Co.KG

A.3.1.3.1 Operating instructions

OPERATING MANUAL

Steimel Gear Pumps
and
Pump Units

Series B, BEN, SF, T

Type designation : .....

Serial No. : .....

Gebr. Steimel GmbH & Co
Maschinenfabrik

Postfach 1565
D-53762 Hennef

Telephone (02242) 88 09 - 0 Fax (02242) 88 09 160

Edition: 10.12 DBA-ZP02-E Sheet 1 of 14

TABLE OF CONTENTS

1 General
1.1 Intended application
1.2 Product information
1.2.1 Type designation and works serial No.
1.2.2 Technical data sheet
1.2.3 Permitted use

2 Safety
2.1 Identification of safety instructions in the Operating Manual
2.2 Qualification and training of operating personnel
2.3 Hazards in the event of non-compliance with the safety instructions
2.4 Compliance with regulations pertaining to safety at work
2.5 Safety instructions relevant for operation
2.6 Safety instructions relevant for maintenance, inspection and assembly work
2.7 Unauthorised alterations and production of spare parts
2.8 Unauthorised modes of operation

3 Transport and intermediate storage
3.1 Transport
3.2 Intermediate storage

4 Technical description
4.1 General description
4.2 Construction and mode of operation
4.3 Mechanical construction
4.3.1 Pump casing
4.3.2 Shafts, bearings and lubrication
4.3.3 Gear wheels
4.3.4 Shaft seal
4.3.5 Drive
4.4 Accessories
4.4.1 Pressure relief valve
4.4.2 Heating and cooling units

5 Mounting / installation
5.1 Installation position
5.2 Mounting for the first time
5.3 Drive elements
5.3.1 Aligning flexible couplings
5.3.2 Coupling guard
5.4 Electrical connection
5.5 Pipes
5.5.1 Purging
5.5.2 Connecting pipes
5.5.3 Additional connections
5.5.4 Suction line
5.5.5 Delivery line
5.5.6 Pressure test and leakage test
5.6 Protection against foreign bodies and contamination

6 Starting up / shutting down
6.1 Preparations for starting up
6.2 Initial commissioning
6.3 Placing back into operation
6.4 Shutting down

7 Maintenance / repair
7.1 General information
7.2 Shaft seal
7.2.1 Stuffing box packing
7.2.2 Axial face seal / rotary shaft seal
7.2.3 Twin seals
7.2.4 Pressure relief valve
7.3 Dismantling and re-assembly
7.3.1 Basic instructions
7.3.2 Dismantling the unit
7.3.3 Dismantling the pump
7.3.4 Assembling the pump / unit
7.4 Spare parts

8 Related drawings

9 Faults; causes and remedies

Steimel

GENERAL INFORMATION / SAFETY

1 General

1.1 Intended application

Steimel gear pumps are suitable for pumping lube oils, fuel oils and other lubricating fluids.
The fluids pumped may not contain any abrasive components and may not chemically attack the materials of which the pump is made.
The field of application of these pumps extends from oil hydraulics through lubrication systems to pure pumping applications.
Above all, the pumped medium must always be clean and have good lubricating properties in order to ensure that the pump operates correctly, in order to ensure a high level of operating reliability and safety and in order to ensure a long service life.

1.2 Product information

1.2.1 Type designation and works serial No.

The full type designation is specified in the technical data sheet or the order confirmation.
The works serial No. comprises the contract No. and a consecutive serial No. (e.g. 94 1234-2). It is imprinted directly on the rating plate or on the pump.

1.2.2 Technical data sheet

The technical data sheet is a part of our sales order confirmation and should contain all important technical details agreed between the purchaser and manufacturer, such as

- designation, type, size
- item No.
- project drawing / dimension sheet
- spare parts list for parts subject to wear
- related Operating Manuals
- suction and delivery connection
- materials
- shaft seal
- pumped medium / field of application
- direction of rotation
- accessories
- hydraulic parameters such as delivery rate, operating pressure, speed, viscosity range and temperature range

If required, also:

- pressure relief valve / safety facilities
- special installation position
- suction characteristics
- operating or working range / scheduled or permitted use
- sound pressure level
- power requirement
- internal preservation
- surface protection / paint finish
- weight
- references to tests, certificates and acceptance tests
- date of issue

in the case of pump units, also:

- drive type / motor / transmission
- motor and transmission data
- coupling / belt drive
- sub-plate, intermediate bracket / pump mount
- accessories / safety facilities
- references to required certificates
- miscellaneous.

1.2.3 Permitted use

The pump / pump unit is designed only for the field of application listed in the technical data sheet of our order confirmation.
Differing operating conditions will necessitate new contractual agreements.

2 Safety

This Operating Manual gives basic instructions which are to be observed during installation, operation and maintenance of the pump. It is therefore imperative that this Manual be read by the responsible personnel / operator prior to assembly and commissioning. It is always to be kept available at the installation site.

It is not only the general safety instructions contained under this main heading "Safety" that are to be observed but also the specific information provided under the other main headings.

2.1 Identification of safety instructions in the Operating Manual

Safety instructions given in this Manual, non-compliance with which would affect safety are identified by the following symbol:

⚠

See DIN 4844-W 9

or where electrical safety is involved, with

see DIN 4844-W 8.

The sign

indicates safety information which may result in risks to the machine and its function if the information is not observed.

It is imperative that signs affixed to the machine, e.g.

- arrow indicating the direction of rotation

- symbols indicating fluid connections

be observed and kept legible.

2.2 Qualification and training of operating personnel

The personnel responsible for operation, maintenance, inspection and assembly must be adequately qualified. Scope of responsibility and supervision of the personnel must be exactly defined by the plant operator. If the staff do not have the necessary knowledge, they must be trained and instructed, which may be performed by the machine manufacturer or supplier on behalf of the plant operator. Moreover, the plant operator is to make sure that the contents of the Operating Manual are fully understood by the personnel.

2.3 Hazards in the event of non-compliance with the safety instructions

Non-compliance with the safety instructions may produce a risk to the personnel as well as to the environment and the machine and results in a loss of any right to claim damages.

For example, non-compliance may involve the following hazards:

- Failure of important functions of the machine/plant

- Failure of specified procedures of maintenance and repair

- Exposure of people to electrical, mechanical and chemical hazards

- Endangering the environment owing to hazardous substances being released.

2.4 Compliance with regulations pertaining to safety at work

When operating the pump, the safety instructions contained in this Manual, the relevant national accident prevention regulations and any other service and safety instructions issued by the plant operator are to be observed.

2.5 Safety instructions relevant for the plant operator

- If hot or cold machine components involve hazards, they must be guarded against accidental contact on site.

- Guards for moving parts (e.g. coupling) must not be removed from the machine while in operation.

- Any leakage of hazardous (e.g. explosive, toxic, hot) fluids (e.g. from the shaft seal) must be drained away so as to prevent any risk to persons or the environment. Statutory regulations are to be complied with.

- Hazards resulting from electricity are to be prevented (see for example, the VDE Specifications and the bye-laws of the local power supply utilities).

2.6 Safety instructions relevant for maintenance, inspection and assembly work

It shall be the plant operator's responsibility to ensure that all maintenance, inspection and assembly work is performed by authorised and qualified personnel who have adequately familiarised themselves with the subject matter by studying this Manual in detail.

Any work on the machine shall only be performed when it is at a standstill, it being imperative that the procedure for shutting down of the machine described in this Manual be followed.
Pumps and pump units which convey hazardous media must be decontaminated.

On completion of work all safety and protective facilities must be re-installed and made operative again.

Prior to restarting the machine, the instructions listed under "Initial commissioning" are to be observed.

TECHNICAL DESCRIPTION

2.7 Unauthorised alterations and production of spare parts

Any modification may be made to the machine only after consultation with the manufacturer. Using spare parts and accessories authorised by the manufacturer is in the interest of safety. Use of other parts may exempt the manufacturer from any liability.

2.8 Unauthorised modes of operation

The reliability of the machine delivered will be only guaranteed if it is used in the manner intended, in accordance with Clause 1 of this Manual. The limit values specified in the data sheet must under no circumstances be exceeded.

3 Transport and intermediate storage

3.1 Transport

The pump / the pump unit is delivered in assembled condition. Lube oils for transmissions, confining and sealing fluid and valves / fittings are delivered in separate packagings if necessary.

The pump / the pump unit is packaged differently, depending on the transport route and size. The packaging complies with our general packaging guidelines unless otherwise contractually agreed. When transporting the complete unit, the cables must be attached, as shown, to pump and motor (not to the eyebolt of the motor and pump).

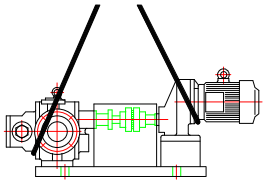

The motor suspension eyebolts are suitable only for the weight of the motor. Likewise, the pump eyebolt is suitable only for the
weight of the pump. Consequently, additional loads attached to the motor and pump may not be raised with these eyebolts.

Please avoid jerky movements, shock and heavy vibration when raising and lowering during transportation !

3.2 Intermediate storage

The pump / the pump unit must be stored on a timber support at a protective location in the position of normal use and must be covered.

It is not permitted to stack heavy pumps / pump units one above the other.

The pump is not provided with internal preservation. In some cases, a film of test medium originating from the test bench run may still adhere to the inside faces. A mineral oil is used as the test medium unless otherwise agreed.
Should you intend to store the unit for long periods, we advise you to contractually agree on a special internal preservation.
The condition of the pump and its preservation must be checked at least once per year!
If stored in the open air, please carefully cover the pump / pump unit and ensure that it is not exposed either to moisture or foreign bodies.

4 Technical description

4.1 General description

The gear pump, being the most popular type of rotary, positive-displacement pump, owes its great popularity primarily to the sophisticated involute gearing which permits low-cost series production with high precision, besides its simple construction. Most gear pumps have straight-toothed spur gears. Certain types are fitted with helical-tooth spur gears or with double-helical (herring-bone) gears in an effort to achieve greater running smoothness.

4.2 Construction and mode of operation

In line with the diverse fields of application of the gear pumps, we have developed a variety of different models.
Very low-pressure gear pumps for pumping moderately fluid to viscous media generally have a large displacement volume and low speed of rotation. It is more economical to pump low-viscosity media with small, high-speed gear pumps.
The mode of operation of the external gear pump results from the engaged teeth. This is where the actual separation process between suction and pressure chamber occurs.
The drive gear wheel / drive pinion drives the mating gear wheel / mating pinion, thus causing the intermeshing teeth to release the tooth spaces abruptly.

When the gear wheels, which are surrounded by a casing or adapter on all sides, rotate, the tooth spaces fill with the medium to be pumped as the result of the partial vacuum produced and convey it outwards and around to the delivery end. Combing of the gear wheels which are turning in opposite directions forces the medium into the delivery line.
The delivery pressure produced by a pump builds up in the delivery line depending on the resistances opposing the delivery flow. These resistances result from pipe friction and the various installed fittings, fixtures and devices.
The power demand increases with increasing delivery pressure!

The pump may never be operated with the suction or delivery line closed!

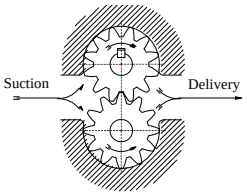

4.3 Mechanical construction

4.3.1 Pump casing

The pump casing encloses the gear wheels and is generally equipped with a suction and delivery connection for the pipes.
Depending on the particular type, it also contains a pressure relief valve and one side of the drive and counter-shaft bearing assembly.
In the case of the disk or plate design, the gear wheels are enclosed by a so-called adapter which has the shape of a plate, the thickness of which corresponds to approximately the length of the gear wheel.
The drive and counter-cover serves to accommodate the shaft bearing.
The shaft seal is accommodated in the drive cover or in a casing.

4.3.2 Shafts, bearings and lubrication

The pump shafts are mounted in plain bearing bushes. The bearing points must be adequately lubricated by the medium!

The pump must always receive fluid and may never be allowed to run dry!

The running play on the sliding surfaces is rated so as to constantly guarantee an adequate lubrication film.
The lower the viscosity of a medium to be pumped, the closer the running play must be kept in order to achieve a favourable volumetric efficiency of the pump. However, this also necessitates a purer medium to be pumped in order to achieve high operating reliability and as long a pump service life as possible.

4.3.3 Gear wheels

Gear wheels have an involute gearing. Straight-tooth spur gears are generally used in feed pumps. Owing to the greater running smoothness, helical-tooth spur gears are given preference in high-speed lube oil pumps in the low pressure range. The gear wheel bodies are generally connected to the shaft by interference fits and, in some cases, also by feather keys. In many cases, shafts and

gear wheels are designed as pinions. Materials, surface hardnesses, wear-resistant coatings and gearing quality will depend on the customer's sales order.

4.3.4 Shaft seal

On versions with stuffing box packing (P), this packing must drip slightly during operation in order to dissipate the frictional heat.
Ensure that the leakage is safely collected or discharged in controlled fashion.

On versions with axial face seal (G), this seal has only slight or invisible (vapour) leakage losses during operation. It requires no maintenance.

No maintenance is required either on versions with rotary shaft seal (R).

In the case of twin seals, such as GG or GR versions, a quench fluid recipient serves to lubricate and cool the downstream seal.These seal combinations serve to exclude air in the case of media which react in an undesirable manner when coming into contact with atmospheric oxygen.

4.3.5 Drive

The pump must be driven free of vibration via a flexible coupling and the drive shaft may be subjected neither to radial forces nor axial forces! Any radial loading of the shaft journal resulting from V belts, chains, drive gear wheels or so forth is cushioned by an additional radial bearing which is accommodated inside or outside the pump. Please state the relevant

parameters for design of this bearing in your purchase order.

4.4 Accessories

4.4.1 Pressure relief valve

The pump can be delivered with a built-in or mounted pressure relief valve or circulation valve which returns the pumped medium from the delivery end to the suction end in order to protect against overloading of the pump. This valve is suitable for occasional, brief response, not owing to regular operation. Rapid heating of the medium occurs should the valve respond for a longer period, and this may result in undesirable changes and may also disturb proper operation of the pump. We recommend inserting bypass-relief valves in a bypass with a return line to the supply tank for high pressures and long response times.

⚠ The setting of the pressure relief valve may be changed only after procuring the prior consent of the pump manufacturer!

The final pressure of the valve lies 20-30 % above the opening pressure.

4.4.2 Heating and cooling units

Types TM have double-walled casings or corresponding ducts and can be heated or cooled with a liquid or gaseous medium. Temperature sensors in the pump serve to monitor and safeguard the pump against inadmissible switch-on of the drive motor.

Types TE are heated with electrical heating cartridges. The temperature is controlled steplessly by means of a system regulator.

5 Mounting / installation

5.1 Installation position

Unless otherwise agreed, the pump should be mounted / installed so that the drive shaft and counter-shaft are vertically adjacent. The fact that the line connections are then horizontal is the best method of guaranteeing that as large a fluid quantity as possible remains in the pump when the pump is switched off. It then normally inducts this fluid "reservoir" easily again under normal conditions when restarted.

5.2 Mounting for the first time

Base-mounted pumps may be mounted only on precisely level supports, in order to avoid twisting. Flange pumps must be mounted in a precisely machined flange centring ring. If machines are to be coupled, please ensure that the machines are carefully aligned. Wherever possible, please use torsion-resistant sub-plates or frames.

⚠ On pump units with a sub-plate made of grey cast iron, please ensure that the deposit surface is absolutely flat and level! On uneven deposit surfaces, the sub-plates may also be aligned with the aid of shims, but these shims must be well-set (snugly fitting).

5.3 Drive elements

Please also refer to 4.3.5 Drive.

- On a pump with free shaft extension, remove the shaft protection (if applicable, corrosion protection, e.g. with solvent, but not with emery paper).
- Fit and lock the drive element onto the shaft.

⚠ Fit the coupling using a fitting tool. On no account may you force the coupling on by knocking or tapping since this could damage the shaft, gear wheels, bearing assembly, thrust rings and retaining rings for instance.

5.3.1 Aligning flexible couplings

The unit is correctly aligned if a straight-edge placed axially over both coupling halves is the same distance from the relevant shaft at all points on the circumference, whereby it must be noted that the measurement point must be turned as well by hand.
Moreover, both coupling halves must be the same distance from each other at all points on the circumference. This can be verified with a probe or gauge.

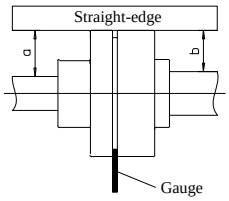

Example: Aligning a flexible coupling without intermediate sleeve or gear rim.

The deviation between the two coupling halves should not exceed 0.3 mm either radially or axially. This must also be ensured at operating temperature and with supply pressure applied.

5.3.2 Coupling guard

In accordance with the accident prevention regulations, the pump may be operated only with a coupling guard. If this coupling guard is not supplied by us, at the express request of the orderer, the operator must provide such a guard.

5.4 Electrical connection

The electrical connection must be made by a qualified electrician in accordance with the applicable safety regulations. Please refer to the Installation Instructions and Operating Manual provided by the motor manufacturer. Please refer to the Installation Instructions and Operating Manual of the equipment manufacturer for safety facilities and control equipment.

5.5 Pipes

5.5.1 Purging

The suction and delivery connection of the pump are sealed with plastic caps. The pump interiors still contain residual quantities of the testing oil or, possibly, a preservation agent. If contractually agreed, pumps are also cleaned by us after the trial run. These pumps are then entirely free of such residue.
Should the pump be purged before initial commissioning, we recommend using either the medium to be pumped or a neutral agent for this purpose. Please do not use water or fluids containing water since this could entail the risk of corrosion, apart from on pumps made of high-grade steel or stainless steel.

⚠ Before the pump is installed in a new installation, the tanks, pipes and connections must be cleaned thoroughly, flushed through and blown through with compressed air. Welding beads, scale and other contamination frequently only become detached after a certain period. In order to prevent this, please take appropriate measures, such as sandblasting, before installation.

⚠ Foreign bodies will endanger the operational reliability and safety of the pump and may lead to blockage or total failure.

5.5.2 Connecting pipes

On no account may the pump be used as a fixed support on long pipes. Long pipes must be supported directly ahead of the pump and must be connected free of strain. On no account may their weight be borne by the pump.

Elongation of the pipes resulting from temperature variations must be compensated for by suitable measures.

5.5.3 Additional connections

The dimensions and position of the additional connections required for the pump, e.g. for sealing, purging or leakage fluid, are specified in the installation and piping plan.

5.5.4 Suction line

In the case of short suction lines, the nominal diameter should be at least that of the pump connection. On longer pipes, determine the most economical nominal diameter in each individual case. Adapters for increasing to larger nominal diameters should be designed with as gentle an expansion angle as possible in order to reduce pressure losses.
The suction line should always be as short and straight as possible. The total suction-end resistance may not exceed 0.4 bar in operating condition. In start-up condition, it may be max. 0.65 bar for a period of up to approx. 30 min (until operating temperature is reached).
The total resistance comprises the geodetic suction head and the pipe resistance, including the resistance of any built-in fixtures and fittings. It is measured as a partial vacuum using a vacuum meter directly at the pump suction connection.
The flow velocity is a further characteristic parameter for the suction line. Always endeavour to achieve a value of 1...1.5 m/s for the flow velocity in the case of oil.
A partial vacuum greater than 0.4 bar impairs the pump's volumetric efficiency, thus reducing the delivery capacity and resulting in cavitation. Cavitation causes increasing noise and greater wear in the long term.
Installing a vacuum meter at the pump suction connection is particularly advisable for checking the partial vacuum in the suction line and assessing the degree of contamination of any suction filter installed.

⚠ The suction line must be absolutely tight !

5.5.5 Delivery line

The operating or delivery pressure must be checked with a pressure gauge fitted directly at the pump delivery connection. The delivery pressure or total resistance comprises the individual resistances of the actuators, the geodetic pressure head and pipe resistances.

Steimel

MAINTENANCE / REPAIR

Line and actuator resistances depend on viscosity. It is advisable to fit a pressure relief valve in order to avoid overloading the
pump as the result of inadmissibly high pressure.
The flow velocity in the delivery line should not exceed 3 m/s in the case of oil.
Should there be air in the suction line, this may cause induction problems when starting the pump, e.g.:
- if the pump is to pump against a closed system (loaded non-return valve),
- if two pumps operating in parallel are mutually safeguarded by means of non-return valves.

The situation can be remedied by bleeding the delivery line or by a small bypass line (DN 4-6) upstream of the non-return valve. The bypass is then connected back to the tank.
On forced-circulation lubrication systems such as those conventional in gear construction, cleaning filters must be fitted in the delivery line.
The overall circulating volume of the lube oil must not be selected too low so that it does not overheat as the result of frequent pumping through the circuit and inadequate cooling. A cooler or heat exchanger must be provided if necessary.

5.5.6 Pressure test and leakage test

These tests must be conducted statically **before** the pump is installed. Special-purpose boiler and pipe test pumps must be used for this purpose. On no account may the feed pump be used !

Test pressures generally lie substantially above the pump design pressure so that the pump could be damaged. (see also 5.5.1 Purging)

5.6 Protection against foreign bodies and contamination

A distinction is made between two types of contamination:

1. Primary contamination

- Filling and feed pumps are exposed to foreign bodies, dirt particles or mineral pigments which are located in the medium to be pumped.

- Pipe elements, in particular upstream of the pump, may be contaminated with fine dirt particles such as metal swarf, welding or soldering beads or abrasives etc. originating from production or installation.
  (see also 5.5.1 Purging)

2. Secondary contamination

Circulation pumps, e.g. for oil supply systems, are subjected to contamination which, after commissioning, forms continually in the sliding surfaces of the gear components as abrasion or abraded wear in the form of metallic particles and which can be entrained by the lube oil.
Gear pumps can be protected against primary contamination by coarse filters or plate-type filters fitted in the suction line.
Depending on the filter rating, these suction filters retain foreign bodies of a specific size

The filter clogs up gradually as the result of contamination and silting-up, thus impeding induction of the feed stream by the pump. This will be noticeable since the pump will become noisier. (see also 8.4 Faults)

A filter rating of 0.05 to 0.20 mm is appropriate, depending on pump design. The larger the filter area, the longer will be the maintenance intervals.
Gear pumps are best protected against secondary contamination by means of changeover filters or double self-bypassing filters fitted in the delivery line and designed for continuous filtration. Whilst one filter chamber is in operation, the other is at standby. The filters can be equipped with visual differential pressure indicators or electrical contacts for remote monitoring in order to permit the increasing contamination of the filter to be recognised.
One of the other aspects which must be borne in mind when selecting the filter rating and size is the viscosity range of the lube oil. Consequently, the filter manufacturer should be consulted. Filter ratings of 25-60 µm are conventional for lube oils.

Foreign bodies endanger the opera-tional safety and reliability of the pump and may lead to blockage or total failure.
Larger quantities of ultra-fine contamination will cause abrasion wear on the sliding surfaces and will reduce the service life of the pump.

6 Starting up / shutting down

6.1 Preparations for starting up

Before starting up, inspect the pump installation in order to establish that it is in proper working order as specified in the technical documentation.
In the case of electric motor-driven pumps, the electrical connections may be made only by a qualified electrician.

Facilities for personal safety (e.g. contact guard on clutches and belts) must be fitted.

6.2 Initial commissioning

Ensure that there is adequate medium in the pump before initial commissioning.
Gear pumps are always self-priming pumps. Under normal circumstances, they may induct the air present in the suction line and convey it into the delivery line. It is advisable to also fill the suction line with the medium to be pumped before starting, particularly in the case of extremely unfavourable suction conditions, in order to prevent the pump running dry.

⚠ Fill the pump and, wherever possible, also the suction line with the fluid to be pumped and then bleed.

Always avoid the pump running dry!
Should there be shut-off elements in the suction or delivery line, these elements must be opened fully. Fully open all additional connections provided, e.g. for sealing or purging fluid etc., and check flow.

Heavy pumps generally have an eyebolt for attaching load suspension devices at the topmost point on the casing. There may be a screw plug at this point on small pumps. Depending on the particular design, the eyebolt is located either in a tapped blind hole or in a through-hole with thread. The latter offers the option of filling or bleeding the pump.

⚠ Check the direction of rotation.

Each pump features a direction-of-rotation arrow. If the pump is operated in the wrong direction, this could entail the risk of overloading the shaft seal and causing it to leak.
Pumps suitable for clockwise and counter-clockwise rotation are exceptions to this rule.
The direction of rotation can even be checked with the pump full and with the shut-off elements open by briefly switching the drive on and off.

⚠ Gear pumps are positive-displacement pumps. If the pump pumps into a closed delivery line, it will be overloaded and fail.

Pressure relief valves protect pumps against damage and overload (see also 4.4.1 Pressure relief valve).

Proper functioning of the pump can be checked by listening to the noise and by checking the pressure gauge. The time taken from switching on to pumping should not exceed 30 seconds.

6.3 Placing back into operation

In principle, the same procedure as that described in Point 6.2 Initial commissioning must be noted in this case.
If the pump has been placed out of operation for a long period, please check that there is still adequate fluid in the pump in order to ensure reliable re-induction.

⚠ Check the mobility of the internal components of the pump in the case of media which could set (e.g. by turning the drive shaft).

⚠ On no account may a cold pump be started up suddenly with a hot medium. The temperature of the pump must be increased slowly in order to avoid seizing of the pump as the result of thermal shock.

6.4 Shutting down

Depending on the particular system, the pump should be allowed to idle for an adequate period - *with the heating source switched off* - until the pumped fluid's temperature has dropped to such an extent as to avoid heat build-up in the pump.
Close the shut-off element in the supply line if the pump has been out of operation for a long period.
Close off additional connections.

The shaft seal must be supplied with sealing fluid even when at standstill on pumps in which the pumped fluid is supplied under vacuum.

Media which set should be drained off. The pump can be used at most only briefly and at low purging pressure in order to clean the pipe system.

⚠ The intention to use the pump as a purging pump must be known when designing the pump in order to ensure material compatibility.

High purging pressures and long operating times should be avoided in the case of purging or cleaning fluids with poor lubrication properties owing to the risk of jamming or seizing on the sliding surfaces of the pump.

7 Maintenance / repair

7.1 General information

Steimel gear pumps largely require no maintenance under normal operating conditions if they are operated with media having good lubrication properties.

Steimel

MAINTENANCE / REPAIR

It is advisable to regularly check the performance data. Integration of corresponding monitoring devices, such as operating hours counters, pressure gauges, pressure and temperature monitors etc., will depend on the requirements and the relevant regulations.

Please note the following points when carrying out maintenance work on the overall system:

- Check that all securing screws, bolts and connections are tight and retighten if necessary.

- Check alignment of the coupling. Examine elastomers for wear.

- Check the pump for leaks, in particular the shaft seals.

7.2 Shaft seal

7.2.1 Stuffing box packing

The stuffing box gland nut may be tightened only lightly so that the packing allows slight leakage during operation, thus dissipating the frictional heat.

If the leakage rate is too high after a long operating period, tighten the nuts on the stuffing box gland uniformly by 1/6 of a turn. Then observe the leakage. If it is no longer possible to tighten the stuffing box gland nut, you must fit an extra packing ring. It is generally not necessary to replace the entire packing assembly.
Should it be necessary to renew the packing assembly nevertheless, also assess the condition of the shaft bearing assembly and the seal seat.
If there are signs of major scoring on the shaft, the shaft must be exchanged since, otherwise, this will impair sealing with new packing rings.

The joints of the packing rings or cut ring sections must be mutually offset by approx. 90°.
The joint should be at the top on the last ring at the gland end.
The packing rings must be carefully bent open both axially and radially only sufficiently to permit them to just be slid over the shaft.

7.2.2 Axial face seal / rotary shaft seal

Maintenance of the axial face seal is restricted to checking for leaks (inspection intermittent 100h).
Very slight leakage of the axial face seal is permitted.
Should the leakage be higher than this, the axial face seal must be renewed. When doing this, also inspect the pump bearing assembly.

The rotary shaft seal requires no maintenance either. Should it leak, it must be renewed (inspection intermittent 100h).

7.2.3 Twin seals

On twin seals and combined seals, the quench fluid level in the recipient must be checked constantly and topped up if necessary.

7.2.4 Pressure relief valve

Please follow the steps below should it be necessary to regulate / adjust the opening pressure of the pressure relieve valve:

- Unscrew the pressure cap and undo the lock nut.

- The required opening pressure can be set by turning the threaded bushing / regulating screw which is then accessible.
  Turning clockwise: *increases the opening pressure*.
  Turning counter-clockwise: *reduces the opening pressure.*
  Recommended values for pressure setting: approx. 10 % above the operating pressure / working pressure of the system.

- Screw the pressure cap back on (do not forget the sealant).

7.3 Dismantling and re-assembly

7.3.1 Basic instructions

The unit must be safeguarded so that it cannot be switched on before starting dismantling work.
The shut-off elements in the supply and delivery line must be closed. The pump must have reached ambient temperature.

7.3.2 Dismantling the unit

1. Disconnect the electrical power supply
2. Remove any fitted additional connections

3.: Unit on sub-plate:

3.1. Remove the coupling guard
3.2. Disconnect the motor terminals
Detach the motor from the sub-plate
3.3. Disengage the pump and motor
3.4. by moving the motor's position
3.5. Detach the suction and delivery connection
3.6. Detach the pump from the sub-plate

4.: Unit with pump support / intermediate bracket:

4.1. Disconnect the motor terminals
4.2. Detach the motor
4.3. Detach the suction and delivery connection
4.4 Detach the pump from the pump support / intermediate bracket

7.3.3 Dismantling the pump

Please refer to the various exploded views (if available).
Identify the position of the pump components and number them consecutively!

1. Undo the casing bolts
2. Release the counter-cover from the casing using 2 forcing threads and hexagon bolts
3. Pull the counter-shaft with gear wheel out of the pump casing
4. Release the safety catch on the coupling half and detach it with an extractor tool and then detach the feather key

5 . Version with packing:

5.1. Undo the gland stuffing box

6. Direction of rotation-dependent axial face seal:

6 1. Pull out the axial face seal

7. Direction of rotation-independent axial face seal:
(Please refer to the special Installation Instructions and Operating Manual)

8. Version with single thrust bearing:

8.1. Detach the bearing catch

9. Version with rotary shaft seal:

9.1. Detach the seal locating cover

10. Pull the drive shaft with gear wheel out of the pump casing
11. On pumps with bearing components made of carbon / ceramic material, always ensure that you take great care when dismantling!
Use absolutely no force since these components are fragile and could fracture.

7.3.4 Assembling the pump / unit

Follow the generally valid rules applicable in the field of mechanical engineering and machine construction when re-assembling.
O-rings must be inspected for damage and must be replaced by new O-rings if necessary.

Flat gaskets must always be renewed. Ensure that the new gasket has precisely the same thickness as the old gasket.
Hylomar SQ 32/M or Epple 33 for instance may be used as permanently elastic universal seals.
All seal and gasket residue must be removed completely. When re-assembling, follow the reverse procedure to that followed when dismantling

- Stuffing box packing, see Point 7.2.1
- Rotary shaft seal
  - Always use new rotary shaft seals.
  - Always ensure that they are fitted in the correct position.
  - The sealing edge of the new ring should not be at the position of the sealing edge on the old ring.
  This can be achieved by:
  - exchanging the shaft or shaft bushing
  - fitting with a spacer ring
  - pressing in to different depths in the location hole.
  - Use a press-in tool and a suitable press-in die when pressing in.
  - *Make sure that you do not damage the sealing lip at sharp edges when sliding into the shaft!*
  - On smooth shafts, round off the keyways and turned grooves. Fitted shafts should have a conical bevel. If this is not possible, an installation sleeve must be used to assist in assembly.
- Axial face seal
  please refer to the special Installation Instructions and Operating Manual
- Pressure relief valve
  please refer to Point 7.2.4

7.4 Spare parts

Keeping a stock of the most important spare parts and parts subject to wear at the installation site is an important precondition for ensuring that the pump is always ready for operation.
On the other hand, we recommend that you keep in stock a reserve pump and return the removed pump to our works for repair if necessary.

Please refer to our spare parts list with cutaway view when ordering spare parts.

We are able to assume warranty only for original spare parts supplied by us.

It must be expressly pointed out that spare parts and accessories not supplied by us are not tested by us and are not approved by us. Installation and/or use of such products may thus impair design characteristics of the pump and thus endanger active and/or passive safety. We are unable to accept liability and accept claims under warranty for damage and loss occurring as the result of using non-original spare parts and accessories.

Please state the following information when submitting orders for spare parts:

- Contract No. / Serial No.
- Part No.
- Quantity

8 Related documents

Please refer to the technical data sheet or the sales order confirmation for the related documents.

FAULTS; CAUSES AND REMEDIES

Faults	a	b	c	d	e	f	g	h	Cause	Remedy	
Pump not inducting	↑								Incorrect direction of rotation	Check direction of rotation as shown by arrow on pump; reverse polarity of motor if direction of rotation is incorrect	1
Pump delivery rate too low	↑	↑			↑			↑	Pump not filled Fluid seal inadequate	Fill and bleed pump and, if necessary, suction line	2
Irregular pumping	↑	↑			↑				- Suction line leaking - Shaft seal leaking - Screw plugs on pump leaking - Pressure cap on pressure relief valve missing or leaking	- Seal in suction line again - Renew shaft seal - Tighten screw plugs or seal them in again (possibly eyebolt) - Screw on and tighten pressure cap with seal	3
Pump overheating	↑	↑			↑				- Suction head excessive / inflow inadequate; Suction filter clogged or too small - Internal parts worn	- Check suction head / resistance and, if necessary, increase the line cross section or shorten the length of the line - if necessary, clean suction filter or fit a larger suction filter - Renew worn parts	4
Sound pressure level too hig					↑				No bleed facility in the delivery line Inducting against non-return valve	Install small bypass line (DN 4) with return line into the oil tank upstream of the nonreturn line. Alternatively: attach bleed cock	5
Valve cone chattering			↑			↑			- Partial flow via pressure relief valve, valve cone jamming - Suction and delivery line clogged	- Remove valve cone and remachine it or renew it - Clear clogging or deposits	6
Motor overheating									- Valve spring operating in resonance range - Valve cone beating against seat	- Fit new valve spring - Adjust the opening pressure	7
Pump seizes up			↑						Pressure relief valve opening too early	Set pressure relief valve to a higher value (10% above operating pressure) Renew valve spring if it is slack	8
					↑				- Gearwheels running unstably - Construction/mounting not noise-optimised	- Load pump at 1-2 bar in the case of unpressurised pumping of thin-bodied media - Isolate structure-borne noise by vibration dampers, provide acoustic hoods	9
			↑		↑				Air inclusions in circulation system Inadequate bleeding Pumped medium frothing	Return lines must enter the tank below the oil level, lay suction and return connections further apart in the tank, increase bleed area / oil level area	10
			↑		↑				Volumetric efficiency of pump too low / viscosity too high	Reduce the speed of rotation when pumping highly viscous media	11

Edition: 10.12 DBA-ZP02-E Sheet 13 of 14

FAULTS; CAUSES AND REMEDIES

Faults	a	b	c	d	e	f	g	h	Cause		Remedy
Pump not inducting									- Delivery pressure too high		- Reduce pressure / increase size of delivery line / reduce resistances
Pump delivery rate too low									- Speed of rotation too high		- Reduce speed of rotation
Irregular pumping									- Defective bearing		- Inspect bearing assembly and repair it
Pump overheating				↑					- Plain bearings overloaded owing to inadequate lubrication	12	- Improve bearing lubrication [1)]
									- Inadequate viscosity of pumped medium		- Reduce temperature
									- Unit poorly aligned		- Align unit
									- Stuffing box packing overtightened		- Slacken stuffing box gland nut
Sound pressure level too hig					↑				- Power consumption too high		- Compare voltage and frequency with motor rating plate, install higher-power motor, reduce speed of rotation
Valve cone chattering									- Running on 2 phases	13	- Repair motor or renew defective fuse
Motor overheating							↑		- Inadequate cooling		- Improve cooling air supply
									- Excessive viscosity of pump medium		- Heat medium to be pumped / install additional heater
									- Motor bearing assembly defective		- Repair bearing assembly
Pump seizes up								↑	Foreign bodies in pump	14	Dismantle pump and remove any foreign bodies, smooth damaged points with oilstone / install a filter
								↑	Seized bearing assembly	15	Check whether the material has lost its lubricating properties owing to excessively high temperature Dismantle pump and repair it; return pump to works if necessary

1) Please enquire with us

Edition: 10.12 DBA-ZP02-E Sheet 14 of 14

A.3.1.3.2 Declaration of Conformity

Zahnradpumpen
Drehkolbenpumpen
Kreiselpumpen
See- und Kühlwasserpumpen
für Verbrennungsmotoren

Wasch- und Beschichtungsanlagen
Entölungs- und Trocknungsanlagen
Fördertechnik
Industriezentrifugen
Späneaufbereitungsanlagen
Spänebrecher
Spänetrocknungsanlagen

Steimel

Gebr. Steimel GmbH & Co. · Maschinenfabrik · Postfach 1565 · 53762 Hennef

Declaration of conformity

According to Machinery Directive 2006/42/EC

We declare that the product:	**Gear pump unit**
Type:	**SF 3-32 RD - LFM**
Article No.:	**ASF3-32RD-211336R**
Serial No.:	**1.PU211688-(1-10)**
Year of construction:	**2021**

corresponds to the following relevant regulations:

Directive for Machinery 2006/42/EC
Directive EMC 2014/30/EU

Applied harmonized standards:

DIN EN 809, DIN EN ISO 12100, DIN EN 60204-1

Responsible for documentation: Gebr. Steimel GmbH & Co.

A technical documentation is completely existing.
The original operating manual that belongs to the machine is on hand

x in the original version

x and in the operator's language

It is assumed that the operation of the product corresponds to the intended use only. For information about the intended use please see the technical documentation.

Hennef, 22.11.2021

Signature _____
(Managing Director or CE Commissioner)

Gebr. Steimel GmbH & Co. Maschinenfabrik, Kommanditgesellschaft Hennef, Reg.-Gericht Siegburg HRA 46
Komplementärin: Gebr. Steimel Verwaltungs-GmbH in Hennef, Reg.-Gericht HRB 2442
Geschäftsführer: Justus Volhard, Dipl.-Ing.

Johann-Steimel-Platz 1
53773 Hennef / Deutschland
Telefon +49 2242 8809 0
Telefax +49 2242 8809 160
www.steimel.com

Commerzbank Hennef IBAN DE36 3804 0007 0280 7600 00 · SWIFT/BIC COBA DEFF 380
Postbank Köln IBAN DE91 3701 0050 0000 9225 03 · SWIFT/BIC PBNKDEFF370
Sparkasse KölnBonn IBAN DE54 3705 0198 1902 0420 82 · SWIFT/BIC COLSDE33
Kreissparkasse Köln IBAN DE61 3705 0299 0000 2012 69 · SWIFT/BIC COKSDE33
USt.-IdNr. DE123098237

A.3.1.3.3 Drawing

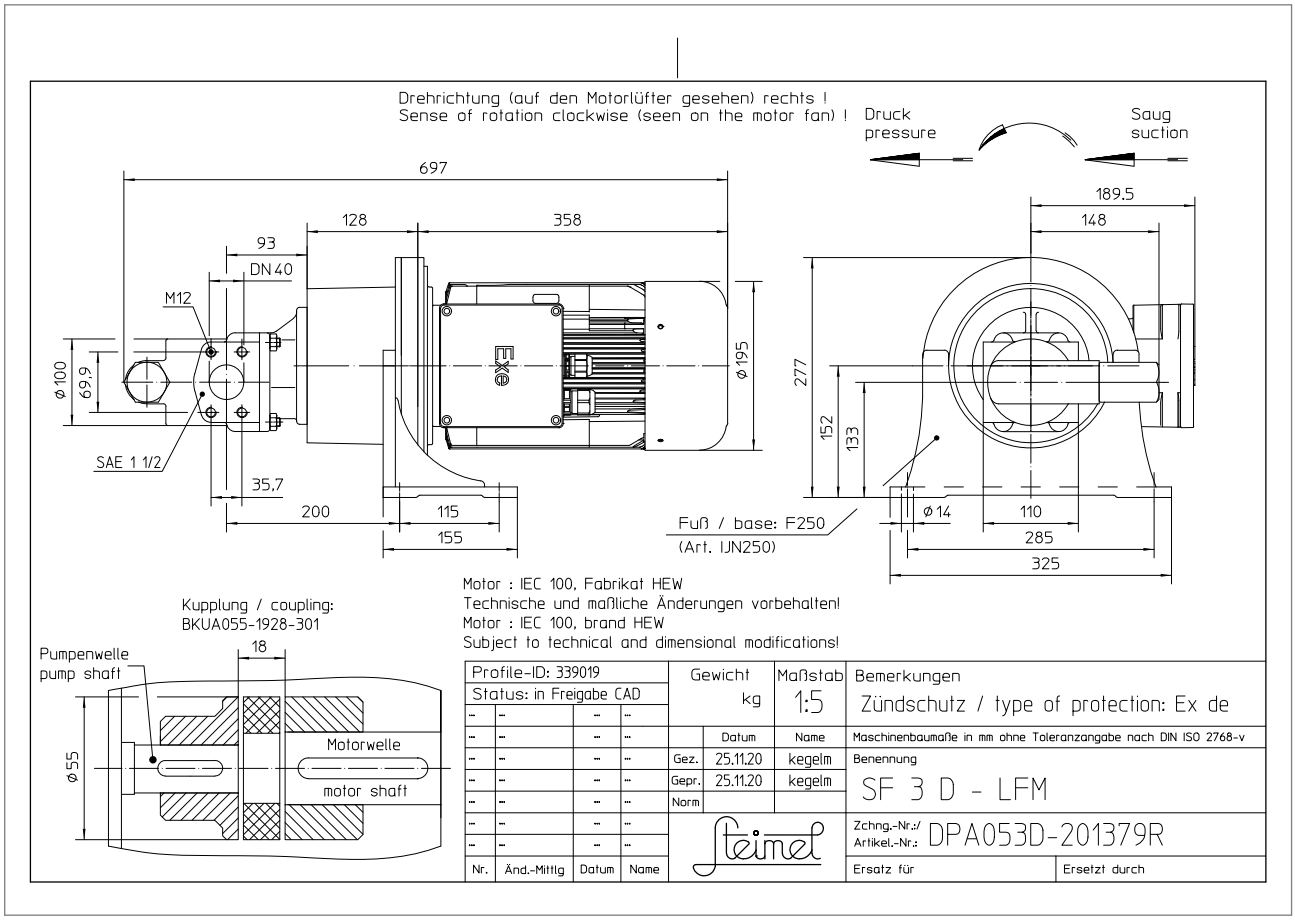

A.3.1.3.4 Replacement parts list

Gebr. Steimel GmbH & Co
Maschinenfabrik
Telefon : 02242 / 8809 - 0
Telefax : 02242 / 8809 -160
Postfach : 1565
53762 Hennef

Ersatzteile / Spare parts / Pièces de rechange

Zahnradpumpe / Gear pump / Pompe à engrenages

SF3/32RD

Stück Quantity Quantité	Artikelbezeichnung Designation Désignation	Artikel - Nr. Article No. Référence	Position Item Poste	Gewicht kg/Stück Weight kg/each Poids kg/pièce	Preis €/Stück Price €/each Prix €/pièce
1	Antriebsritzel	EAR053032045EC51	1		
	Driving pinion				
	Pignon de commande				
1	Gegenritzel	EGR053032045EC51	2		
	Counter pinion				
	Contre-pignon				
4	Lagerbuchse	ELB---222525MD01	3		
	Bearing bush				
	Coussinet				
2	Spannhülse	ITW12,5X13,5	4		
	Clamping				
	Manchon				
1	Radialwellendichtring	IDI020x035x06P	5		
	Radial shaft seal				
	Bague radial				
1	O-Ring	IDP090X2P	6		
	O-ring				
	Bague-O				
1	Ventilkegel	EVK053------VB01	7		
	Valve cone				
	Clapet de soupape				
1	Ventilfeder 2-18 bar	EVF92216X100FA01	8		
	Valve spring				
	Ressort de soupape				
1	O-Ring	IDP038X2P	9		
	O-ring				
	Bague-O				

Ausgabe Issue : 27.10.11 Edition	geprüft	Nr.	ÄM-Nr.	Datum	Name	Stücklisten - Nr. / Parts List No. / Nomenclature n° **DET053032RD--050R**

02.08.2019

\\steimel.local\hennef\organisation\tb\tbp\dokumentation\techdoc\det\sf\sf3-standard\det053032rd--050r.doc

1/2

Gebr. Steimel GmbH & Co
Maschinenfabrik
Telefon : 02242 / 8809 - 0
Telefax : 02242 / 8809 -160
Postfach : 1565
53762 Hennef

Ersatzteile / Spare parts / Pièces de rechange

Zahnradpumpe / Gear pump / Pompe à engrenages

SF3/32RD

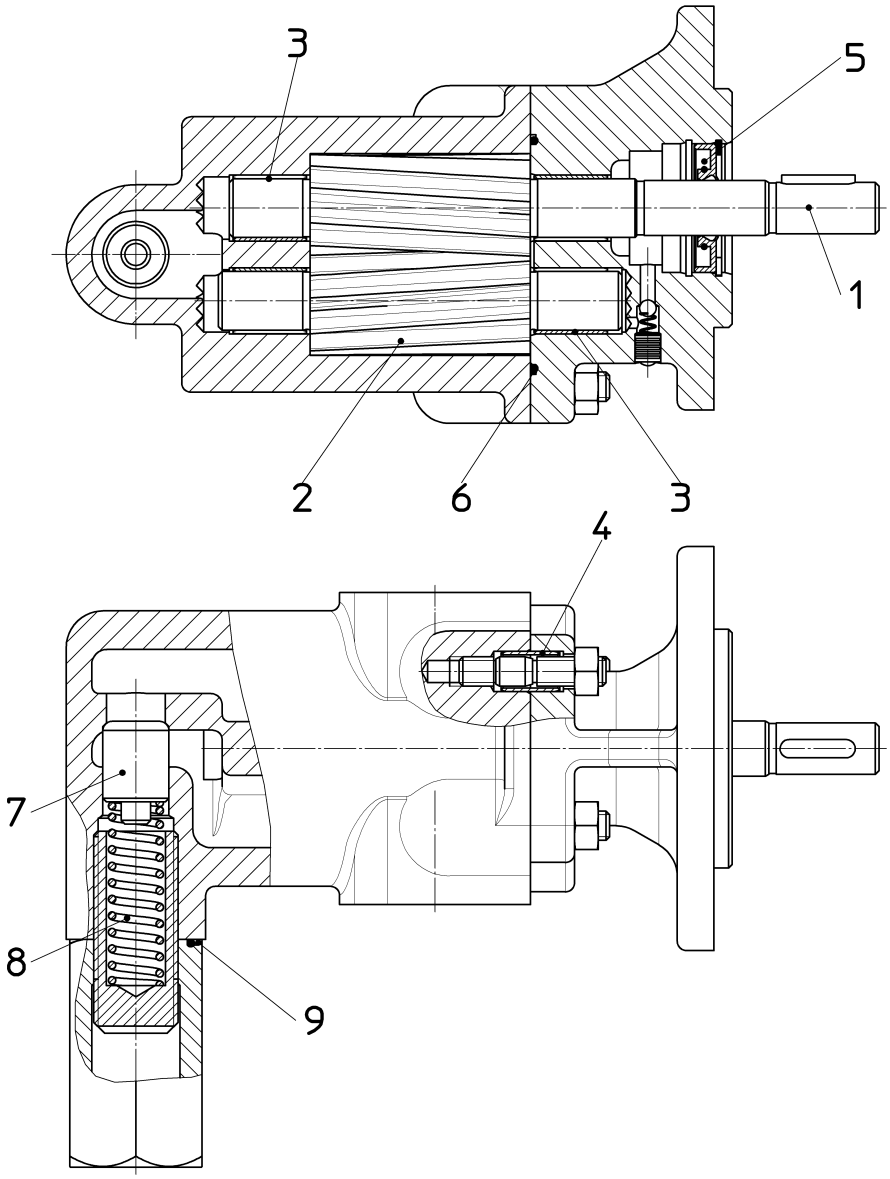

Ausgabe Issue : 27.10.11 Edition	geprüft					Stücklisten - Nr. / Parts List No. / Nomenclature n° **DET053032RD--050R**
		Nr.	ÄM-Nr.	Datum	Name	

02.08.2019

\\steimel.local\hennef\organisation\tb\tbp\dokumentation\techdoc\det\sf\sf3-standard\det053032rd--050r.doc

2/2

A.3.1.3.5 Motor

Name	Data
Designation	Electric motor
Type	W22 - IE
Number	
Type of manual	*Technical documentation*
Manufacturer	WEG Germany GmbH /Herforder Elektromotoren-Werke gmbH & Co.KG

EC type-examination certificate

DATA SHEET

Three Phase Induction Motor - Squirrel Cage

Customer	: WEG GERMANY GMBH
Product line	: W22 - IE3 Premium Efficiency Multivoltage

Frame	: 112M	Cooling method	: IC411 - TEFC
Insulation class	: F	Mounting	: B3T
Duty cycle	: S1	Direct of rotation[1]	: Both
Ambient temperature	: -20 ℃ to +40 ℃	Starting method	: Direct On Line
Altitude	: 1000 m.a.s.l	Approx. weight[3]	: 45.5 kg
Degree of protection	: IP55	Moment of inertia (J)	: 0.0180 kgm²
Design	: N		

Output		4 kW	4 kW	4 kW	4 kW
Poles		4	4	4	4
Frequency		50 Hz	50 Hz	50 Hz	60 Hz
Rated voltage		380/660 V	400/690 V	415 V	460 V
Rated current		8.47/4.88 A	8.34/4.83 A	8.35 A	7.48 A
L. R. Amperes		55.1/31.7 A	58.4/33.8 A	62.6 A	59.8 A
LRC (p.u.)		6.5	7.0	7.5	8.0 x Code K
No load current		4.30/2.48 A	4.70/2.72 A	5.10 A	4.40 A
Rated speed		1445 rpm	1450 rpm	1455 rpm	1755 rpm
Slip		3.67 %	3.33 %	3.00 %	2.50 %
Rated torque		26.4 Nm	26.4 Nm	26.3 Nm	21.8 Nm
Locked rotor torque		220 %	260 %	280 %	290 %
Breakdown torque		270 %	310 %	340 %	370 %
Service factor		1.00	1.00	1.00	1.25
Noise level[2]		56.0 dB(A)	56.0 dB(A)	56.0 dB(A)	56.0 dB(A)
Locked rotor time		15 s (hot) 27 s (cold)	15 s (hot) 27 s (cold)	15 s (hot) 27 s (cold)	15 s (hot) 27 s (cold)
Efficiency (%)	50%	88.9	88.7	88.0	87.5
	75%	89.0	89.1	88.9	89.5
	100%	88.6	88.8	88.9	89.5
Power factor	Start	0.60	0.56	0.57	0.55
	50%	0.65	0.60	0.57	0.53
	75%	0.76	0.72	0.70	0.66
	100%	0.81	0.78	0.75	0.75

	Drive end	Non drive end
Bearing type	6207-ZZ	6206-ZZ
Lubrication interval	-	-
Lubricant amount	-	-
Lubricant type	MOBIL POLYREX EM	

Foundation loads

Maximum traction	: 1657 N
Maximum compression	: 2104 N

Standards

Specification	: IEC 60034-1	Vibration	: IEC 60034-14
Tests	: IEC 60034-2	Tolerance	: IEC 60034-1
Noise	: IEC 60034-9		

This revision replaces and cancels the previous one, which must be eliminated.

(1) When viewed from the drive end.

(2) Measured at 1m and with tolerance of +3dB(A).

(3) Approximate weight subject to changes after manufacturing process.

(4) At the rated point.

These are average values based on tests with sinusoidal power supply, subject to the tolerances stipulated in IEC 60034-1.

Rev.	Summary of changes	Performed	Checked	Date

Performed by	sfromlowitz		406726/2019	
Checked by	AUTOMATICO		Page	Revision
Date	29/11/2019		1/1	0

This document is exclusive property of WEG S/A. Reprinting is not allowed without written authorization.

Operating manual

Electric motors **Size 63 - 225**
ATEX / IECEx

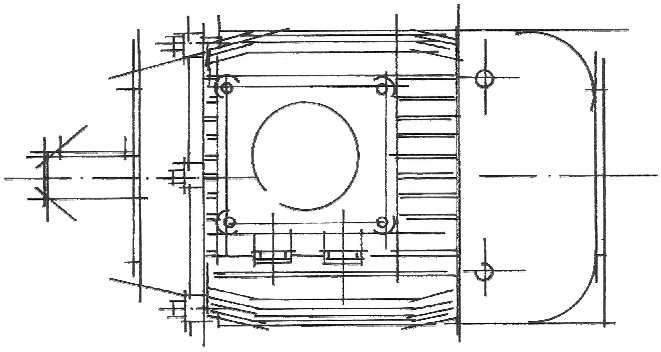

Doc-ID: 6316

Read the operating manual before starting all work.

© Herforder Elektromotoren-Werke
GmbH & Co. KG
Goebenstr. 106
D-32051 Herford

Tel.: +49 (0) 5221 5904-0
Fax: +49 (0) 5221 5904-34

E-Mail: info@hew-hf.de
Internet: www.hew-hf.de

Release:

Created by:
Kothes!
Technische Kommunikation GmbH & Co. KG
www.kothes.de

This issue replaces all previous issues. All previous issues are invalid. The date of issue (⇨ footer) is authoritative.

Table of contents

1 General information 5
1.1 Information on this operating manual 5
1.2 Explanation of symbols 6
1.3 Limitation of liability 7
1.4 Copyright 8
1.5 Spare parts 8
1.6 Warranty conditions 8
1.7 Customer service 8

2 Safety 9
2.1 Responsibility of the user 9
2.2 Staff requirements 10
2.2.1 Qualifications 10
2.2.2 Unauthorised parties 12
2.2.3 Training 12
2.3 Proper use 12
2.4 Personal safety equipment and clothing 13
2.5 Special hazards 14
2.6 Safety devices 17
2.7 Securing the machine to prevent it from being switched back on 17
2.8 How to act in case of hazards and accidents 18
2.9 Environmental protection 19

3 Technical data 20
3.1 Operating conditions 20
3.2 Type plate 20
3.3 Explosion protection marking 21

4 Construction and function 23
4.1 Overview of sizes 63 to 132 23
4.2 Overview of sizes 160 to 225 24
4.3 Connection, motor protection 25
4.4 Obligations and conditions 25
4.5 Operation on the frequency converter 26

5 Transportation, packaging and storage 27
5.1 Delivery inspection 28
5.2 Transportation 29
5.3 Packaging 30
5.4 Storage 31

Table of contents

6 Installation and commissioning 32
6.1 Safety 32
6.2 Installation 34
6.2.1 Ventilation at the location for use 34
6.2.2 Types of construction as per EN 60034-7 34
6.2.3 Erecting the machine 37
6.2.4 Installation 37
6.3 Connecting to the energy supply 38
6.3.1 Screwed cable gland 38
6.3.2 Voltage and circuit 39
6.3.3 Checking the insulation resistance 40
6.4 Commissioning 40

7 Operations 42
7.1 General information 42
7.2 Shutting down in an emergency 42

8 Faults 43
8.1 Safety 43
8.2 Fault table 45
8.3 Commissioning after remedied fault 47

9 Maintenance 48
9.1 Safety 48
9.2 Cleaning 50
9.3 Maintenance schedule 50
9.4 Tightening torque values for screws 52
9.4.1 Tightening torque values for screws for electrical connections 52
9.4.2 Screw connections, property class 8.8 and A4-70 53
9.4.3 Screw connections of property class 5.6 53
9.5 Measures on completion of maintenance 54

10 Removal 55
10.1 Safety 55
10.2 Removal 56
10.3 Disposal 57

1 General information

1.1 Information on this operating manual

This operating manual makes it possible to handle the machine safely and efficiently.

The manual is a component of the machine and must be kept in the direct vicinity of the plant and be accessible to staff at all times. Staff must have carefully read and understood this manual before starting all work. Adherence to all the specified safety instructions and instructions for actions in this operating manual is a fundamental requirement for working safely.

The local regulations for the prevention of accidents and the general safety regulations for the location in which the machine is used also apply.

The illustrations in this operating manual are for purposes or general understanding and may differ from the actual machine version.

.

1.2 Explanation of symbols

Safety instructions

The safety instructions in this manual are indicated by symbols. The safety instructions are introduced by signal words which express the extent of the risk.

It is imperative to adhere to safety instructions and act with caution in order to prevent accidents, personal injury and material damage.

DANGER!
... indicates an immediately dangerous situation which will lead to death or serious injuries if not avoided.

WARNING!
... indicates a possibly dangerous situation which may lead to death or serious injuries if not avoided.

CAUTION!
... indicates a possibly dangerous situation which may lead to minor or light injuries if not avoided.

CAUTION!
... indicates a possibly dangerous situation which may lead to material damage if not avoided.

Tips and recommendations

NOTE!
… draws attention to tips and recommendation and information for efficient, fault-free operation.

Special safety instructions

The following symbols are used in safety instructions in order to point out particular hazards.

... indicates risks from electrical current. Failure to observe the safety instructions will result in the risk of serious or fatal injury.

EXPLOSION PROTECTION!

... indicates content and instructions in this operating manual which apply when using this machine in potentially explosive areas as per the ATEX directive. Failure to observe this content and these instructions can lead to a loss of explosion protection.

1.3 Limitation of liability

All the information and instructions in this manual have been complied in line with the valid standards and regulations, state-of-the-art technology and our many years of experience and know-how.

The manufacturer shall not be liable for damages caused by:

- Failure to observe the manual
- Improper use
- Employment of unqualified staff
- Arbitrary modifications
- Technical changes
- Use of non-approved spare parts

In case of special versions, the utilisation of additional order options or due to new technical changes, the actual scope of delivery may differ from the explanations described here and the illustrations.

The obligations agreed in the delivery contract, the General terms and Conditions and the Terms and Conditions of Delivery of the manufacturer, and the legal regulations valid at the point of completion of the contract apply.

We reserve the right to make technical changes within the scope of further development and improvement of the performance characteristics.

1.4 Copyright

This operating manual is protected by copyright and for internal use only.

The manual must not be made available to third parties, reproduced in any way (including excerpts), its content must not be utilised and/or communicated without the written approval of the manufacturer, except for internal purposes.

Failure to comply will render the offender liable for damages. We reserve the right to further claims.

1.5 Spare parts

Explosion protection

EXPLOSION PROTECTION!

The use of incorrect or faulty spare parts can use to explosions in the potentially explosive area.

Therefore:

- Only use the manufacturer's original spare parts or spare parts expressly approved by the manufacturer.
- Always contact the manufacturer in case of any uncertainty.

Failure to adhere to these instructions will lead to a loss of the explosion protection.

Purchase spare parts from authorised dealers or directly from the manufacturer. See page 2 for the address.

The spare parts list can be found on pages 23-24.

1.6 Warranty conditions

The warranty conditions are included in the manufacturer's General Terms and Conditions.

1.7 Customer service

Our customer service department is available to provide technical information. See page 2 for contact details.

Furthermore our staff are always interested in receiving new information and hearing of new experiences gained from the use of our products which can be used to improve our products.

2 Safety

This section provides you with an overview of all important aspects of safety required for providing staff with optimum protection as well as safe, fault-free operation.

Failure to observe the instructions and safety instructions for actions in this operating manual can cause considerable risks.

2.1 Responsibility of the user

The machine is used in the commercial field. The user of the machine is therefore subject to the legal obligations for occupational safety.

In addition to the safety instructions in this manual, the regulations for safety, accident prevention and environmental protection which apply at the location for use of the machine must also be observed. The following in particular applies:

- The user must fully acquaint himself with the valid occupational safety regulations and, in addition, carry out a risk assessment to determine the hazards which result from the particular working conditions at the location in which the machine is used. The results must be implemented as a set of operating instructions for operation of the machine.
- The user must carry out checks during the entire period of its use to determine whether the operating instructions drawn up are in line with the current regulations and adjust them as necessary.
- The user must clearly set out the responsibilities for installation, operation, maintenance and cleaning.
- The user must make sure that all staff involved with work on the machine have read and understood the manual.
  Furthermore, staff must be provided with regular training and information on the following points:
  - Fire and explosion hazards at the machine's location for use and the immediate vicinity.
  - Local fire and explosion protection measures.
  - Location and function of protective equipment.
  - The necessity of a ban on smoking.
  - The necessity of avoiding open fire.
  - Procedure for cleaning and maintenance work and repairs, including the tools, aids and cleaning agents to be used.
  - The necessity of wearing personal safety equipment and clothing which is suitable for the potentially explosive environment.
- The user must adhere to the further obligations of Directive 99/92/EC for the improvement of health and safety measures

and the safety of employees who may be at risk from a potentially explosive atmosphere. This includes adherence to further organisational measures, such as:

- marking potentially explosive areas.
- drawing up an explosion protection document for each zone.
- denying unauthorised parties access.
- putting up clear signs indicating all restraints.
- introduction of a permit procedure for carrying out dangerous work.

- The user must provide staff with the required safety clothing and equipment.

The user is also responsible for ensuring that the machine is kept in technically perfect condition. The following applies:

- The user must make sure that the maintenance intervals described in the operating manual are adhered to. Reduce the intervals accordingly in case of above average strain.
- The user must have all the safety devices checked regularly to make sure they are complete and fully functional.

Loss of explosion protection

EXPLOSION PROTECTION!
On machines which are designed to be installed in plants for operation in potentially explosive areas, as defined by Directive 2014/34/EU, the user must make sure that the directive is adhered to for the entire plant.
Failure to comply will lead to a loss of the explosion protection.

2.2 Staff requirements

2.2.1 Qualifications

WARNING!
Risk of injuries in case of insufficiently qualified staff.
Improper use can cause considerable personal injury and material damage.
Therefore:
– Have all tasks performed by staff with the appropriate qualifications only.

The following levels of qualification are named in the operating manual for various ranges of tasks.

- **Trained person**
  has been informed of the tasks with which he has been entrusted and the possible risks in case of incorrect behaviour in training measures provided by the user.
- **Specialist staff**
  are capable of carrying out the work with which they have been entrusted and recognising the potential risks independently because of their specialist qualifications, knowledge and experience, and knowledge of the valid regulations.
- **Qualified electrician**
  is capable of carrying out the work on electrical equipment and recognising and preventing the potential risks independently because of their specialist qualifications, knowledge and experience, and knowledge of the valid standards and regulations.
  The qualified electrician is qualified to work in the specific area in which he works and is familiar with the relevant standards and regulations.
- **Qualified specialist for the potentially explosive area**
  is capable of carrying out the work on plants or components in the potentially explosive area and recognising the potential risks independently because of their specialist qualifications, knowledge and experience, and knowledge of the valid standards and regulations.

  The qualified specialist has knowledge of the various ignition protection types, installation procedures and area classifications in potentially explosive spaces, and certification for the purported experience and knowledge.

  The person is familiar with the relevant rules and regulations for the work and explosion protection, in particular but not exclusively, ATEX product directive 2014/34/EU and the pertaining EN 60079 standard as well as the IECEx standard IEC 60079.

Staff should be made up exclusively of people who can be expected to carry out their work reliably. People who reactions are influenced, for instance, by drugs, alcohol or medication, must not be allowed.

- When selecting staff adhere to the valid local regulations relating to age and profession.

2.2.2 Unauthorised parties

WARNING!
Danger for unauthorised parties.

Unauthorised persons who do not meet with the requirements described here, are not familiar with the hazards in the working area.

Therefore:

- Keep unauthorised persons away from the working area.
- In case of doubt, approach these persons and instruct them to leave the working area.
- Stop work until any unauthorised parties have left the working area.

2.2.3 Training

Staff must be provided with regular training by the user. Training must be logged to keep better track.

Date	Name	Type of training	Training provided by	Signature

Fig. 1

2.3 Proper use

The machine has been engineered and designed exclusively for the proper use described in this documentation.

The machine is use exclusively as a drive in commercial high voltage systems.

Proper use also includes adherence with all the stipulations of this manual.

Any other type of use, or use of the machine going beyond this use is considered improper use and can cause dangerous situations.

WARNING!
Danger from improper use.

Improper use of the machine can cause dangerous situations.

Take particular care not to use the machine as follows:

– Operation beyond the original designated application.
– Operation of machines in potentially explosive areas which do not have explosion protection markings and are thus not suitable for use in a potentially explosive atmosphere (⇨ Chapter "Explosion protection marking").

Claims of any kind for damages caused by improper use are null and void.

The user carries sole liability for any damages in case of improper use.

2.4 Personal safety equipment and clothing

Whilst work is being carried out, personal safety equipment and clothing must be worn in order to minimise health hazards.

- Always the safety clothing and equipment required for the respective task whilst working.
- Follow the instructions in the working area on personal safety equipment and clothing.

To be worn for all work

The following must be worn for all work:

Occupational safety clothing

is close-fitting working clothing with a low tear strength, close-fitting sleeves and no protruding parts. It serves primarily as protection from entanglement in moving machine parts.

Do not wear rings, chains or other jewellery.

Safety shoes

to protect from heavy falling parts and from slipping on slippery surfaces.

To be worn for special tasks

When carrying out special tasks, special safety equipment and clothing is required. Reference is made to this in the individual chapters of this manual. These special items of safety clothing and equipment are explained in the following:

Light breathing mask

to protect from harmful dust.

2.5 Special hazards

The following section points out residual risks which have been determined by a risk analysis.

- Adhere to the safety instructions listed here and the warnings in other chapters in order to reduce health hazards and prevent dangerous situations.

Explosion protection

EXPLOSION PROTECTION!

The introduction of ignition sources such as sparks, open flames and hot surfaces can cause explosions in the potentially explosive area. Therefore, when carrying out all work on the machine in the potentially explosive area:

– Do not start any work without a written permit.
– Only carry out work to the exclusion of a potentially explosive atmosphere.
– Only use tools which are approved for use in the potentially explosive area.

Failure to adhere to these instructions will lead to a loss of the explosion protection.

Electrical current

DANGER!
Danger to life from electrical current.

There is an immediate risk of fatal injury in case of contact with live parts. Damage to the insulation or individual components can mean danger to life.

Therefore:

- In case of damage to the insulation, switch off the power supply immediately and have repairs carried out.
- Have work on the electrical equipment carried out by qualified electricians only.
- When any work is carried out on the electrical equipment, disconnect it from the power and make sure it is free of voltage.
- Before carrying out maintenance, cleaning and repair work, switch off the power supply and secure it to prevent it from being switched back on.
- Do not jumper or disable any fuses or circuit breakers. When replacing fuses or circuit breakers make sure to adhere to the correct ampere rating.
- Keep moisture away from live parts. It can lead to a short circuit.

Moving parts

WARNING!
Risk of fatal injury from moving parts.

Rotating parts and/or parts which move linearly can cause serious injuries.

Therefore:

- Do not reach into moving parts or handle moving parts during operation.
- Do not open covers during operation.
- Adhere to the follow-up time:
  Before opening covers make sure that none of the parts are still moving.
- In the danger area wear close-fitting protective clothing.

Safety

Hot surfaces

CAUTION!
Risk of burns from hot surfaces.

Contact with hot parts can cause burns.

Therefore:

- When working in the vicinity of hot parts always wear protective clothing and protective gloves.
- Before carrying out any work make sure that all components have cooled to ambient temperature.

Soiling and objects lying around

CAUTION!
Risk of stumbling due to soiling and objects left lying around.

Soiling and objects left lying around are sources of slipping and stumbling ad can cause considerable injuries.

Therefore:

- Always keep the working area clean.
- Remove any objects which are no longer required.
- Mark any possible stumbling hazards with yellow and black marker tape.

Sharp edges and corners

CAUTION!
Risk of injuries from edges and corners.

Sharp edges and corners can cause grazes and cuts on the skin.

Therefore:

- Proceed with caution when working in the vicinity of sharp edges and corners.
- If in doubt wear protective gloves.

2.6 Safety devices

Integration into an emergency stop concept required

The machine is for use within a plant. It does not have its own control unit and does not have an independent emergency stop function.

Before the machine is put into operation install the emergency stop devices for the machine and integrate it into the plant control unit's safety chain.

Connect the emergency stop devices so that there is no chance that dangerous situations for people and objects of material value cannot arise if the energy supply is broken or the energy supply is activated after being broken.

The emergency stop devices must be freely accessible at all times.

2.7 Securing the machine to prevent it from being switched back on

DANGER!
Risk of death from switching on without authorisation!

When working in the danger area there is a risk that the energy supply will be switched on without authorisation. This puts the life of people in the danger area at risk.

Therefore:

– Adhere to the instructions on securing the machine to prevent it from being switched on in the chapters of this manual.
– Always adhere to the procedure described below to secure the machine to prevent it from being switched back on.

Switch secured with a padlock on: …….. at ..... h. **DO NOT SWITCH ON** The padlock must only be removed by: …… once you have made sure that there is nobody in the danger area.

Fig. 2

Securing the machine to prevent it from being switched back on:

1. Switch off the energy supply.
2. If possible, secure the switch with a padlock and attach a clearly visible sign according to Fig. 2 to the switch.
3. Have the key kept safely by the member of staff named on the sign.

Switched off on: …….. at ..... h. **DO NOT SWITCH ON** Only to be switched on by: …… once you have made sure that there is nobody in the danger area.

Fig. 3

4. If it is impossible to secure a switch with a padlock, erect a sign according to Fig. 3.
5. Once all work has been carried out, make sure that nobody is in the danger area.
6. Make sure that all safety devices and mechanisms are installed and fully functional.
7. Do not remove the sign until you have done so.

2.8 How to act in case of hazards and accidents

Preventive measures

- Always be prepared for accidents or fires.
- Keep first aid facilities (first aid box, blankets etc.) and fire extinguishers accessible at all times.
- Familiarise staff with accident report, first aid and rescue facilities.
- Keep access routes for emergency vehicles clear.

Measures in case of accidents

- Trigger an emergency stop immediately.
- Instigate first aid measures.
- Remove any people from the danger zone.
- Inform the responsible party at the location.
- Notify emergency services.
- Clear access routes for emergency vehicles.

2.9 Environmental protection

CAUTION!
Risk of environmental damage in case of incorrect handling.

Incorrect handling of environmentally hazardous substances, in particular incorrect disposal, can cause considerable damage to the environment.

Therefore:

- Always adhere to the instructions below.
- If environmentally hazardous substances are accidentally released into the environment, take suitable measures immediately. In case of doubt inform the responsible local authority of the damage.

The following environmentally hazardous substances are used:

Lubricants

Lubricants such as grease and oils contain toxic substances. They must not be released into the environment. They must be disposed of by a specialist disposal company.

NOTE!

The motors comply with EC Directive 2011/65/EU for the limitation of the use of certain hazardous substances in electrical and electronic devices.

3 Technical data

> *NOTE!*
> *The necessary technical data can be found on the respective type plates. This information is authoritative.*
> *Further technical data can be taken from the catalogue.*

3.1 Operating conditions

Environment

Specification	Value	Unit
Temperature range (standard)	-20…+40	°C
Temperature range (optional)	-50…+85	°C
Maximum installation height above sea level	1000	m

The ambient temperature range is only indicated on the type plate if it deviates from the standard.

3.2 Type plate

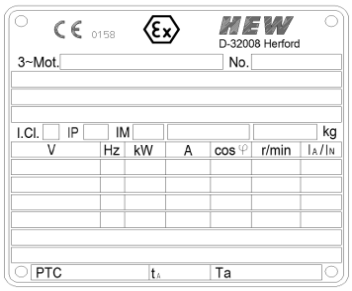

Fig.4: Example of a type plate

The type plate is situated on the motor housing and the information it contains includes:

- Explosion protection symbol
- Manufacturer/year of manufacture
- CE symbol
- ID of notified body
- Certificate number
- Motor identification (type), motor number (serial number)
- Weight
- Performance data
- Ambient temperatures deviating from the standard temperatures of – 20°C to + 40°C specified in the standard

> *NOTE!*
> *The information on the type plate may vary depending on the type of motor.*

3.3 Explosion protection marking

EXPLOSION PROTECTION!
acc. to ATEX directive 2014/34/EU
standard EN 60079 or IECEx / standard IEC 60079

Marking acc. to ATEX – size 63	
II 2G	Ex db IIC T4 – T6 Gb or Ex db e IIC T4 – T6 Gb
II 2G	Ex db IIB T4 – T6 Gb or Ex db e IIB T4 – T6 Gb
II 2D	Ex tb IIIC T 135 – 85°C Db
II 2D	Ex tb IIIB T 135 – 85°C Db
Marking acc. to IECEx – size 63	
	Ex db IIC T4 – T6 Gb or Ex db e IIC T4 – T6 Gb
	Ex db IIB T4 – T6 Gb or Ex db e IIB T4 – T6 Gb
	Ex tb IIIC T 135 – 85°C Db Ex tb IIIB T 135 – 85°C Db

Marking acc. to ATEX – sizes 71 -225	
II 2G	Ex d IIC T1 – T6 Gb or Ex de IIC T1 – T6 Gb
II 2G	Ex d IIB T1 – T6 Gb or Ex de IIB T1 – T6 Gb
II 2D	Ex tb IIIC T 200 – 85°C Db
Marking acc. to IECEx – sizes 71 -225	
	Ex d IIC T1 – T6 Gb or Ex de IIC T1 – T6 Gb
	Ex d IIB T1 – T6 Gb or Ex de IIB T1 – T6 Gb
	Ex tb IIIC T 200 – 85°C Db

Technical data

Section	Designation	Significance
Ex	Explosion protection symbol	Marking for protection from explosions
II	Device group	Device group II. The motor can be used in potentially explosive areas except in mining.
2	Category	For application in Zone 1 and Zone 21
G D	Explosive atmosphere	… cause by gas. … cause by dust.
Ex	Standard	Standard on explosion protection
d / db e / eb tb	Ignition protection type	Pressurised enclosure. Increased safety. Protection by housing
IIC IIB IIIC IIIB	Explosion group Dust group	Maximum experimental safe gap (MESG) T ype and shape
T1 – T6	Temperature class	maximum surface temperature present T1 (450 °C) – T6 (85 °C)
Gb Db	EPL	equipment protection level

NOTE!

There may be further signs on the machine with various pieces of information.

4 Construction and function

4.1 Overview of sizes 63 to 132

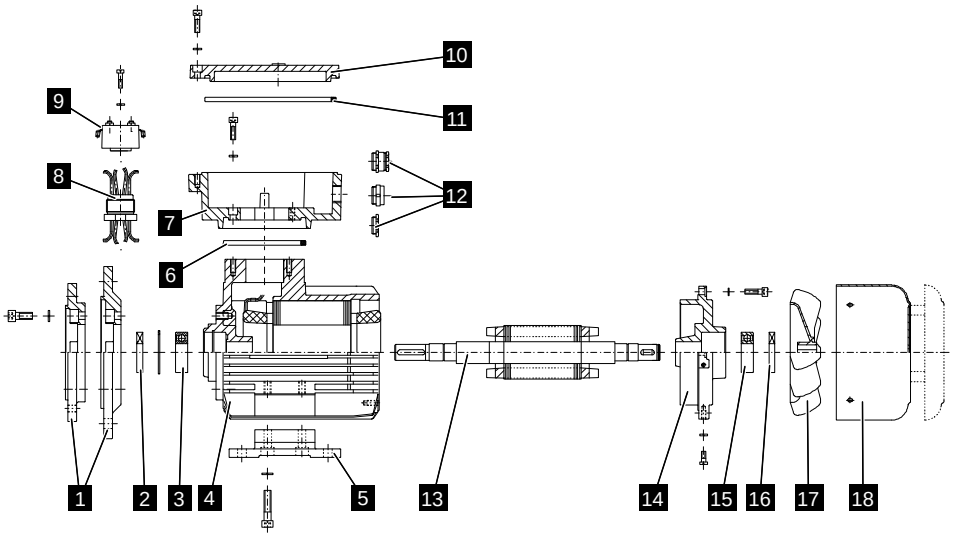

Fig. 5: Overview of sizes 63 to 132

1 Flange rings
2 Sealing rings DS*[1]
3 Rolling bearings DS*[1]
4 Stator housing, complete
5 Motor foot
6 Terminal box seal
7 Lower terminal box section
8 Cable bushing
9 Terminal board
10 Terminal box cover
11 Terminal box cover seal
12 Screwed cable gland
13 Rotor shaft, complete
14 Bearing cover NS*[2]
15 Rolling bearings NS*[2]
16 Sealing ring NS*[2]
17 Fan blade
18 Ventilation hood (with optional safety cover)

*[1] DS = Drive side

*[2] NS = Nondrive side

! For sizes 63 and 71 the terminal box is casted

4.2 Overview of sizes 160 to 225

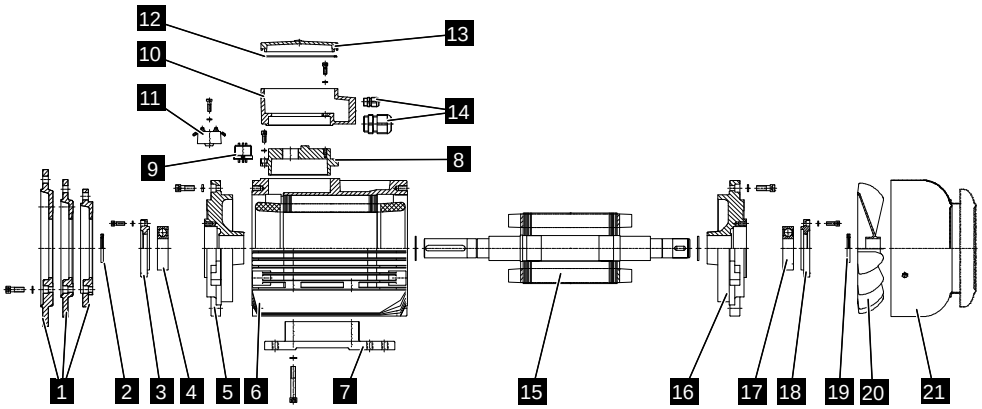

Fig. 6: Overview of sizes 160 to 225

1 Flange rings
2 Sealing rings DS*[1]
3 Cover plate DS*[1]
4 Rolling bearings DS*[1]
5 Base flange
6 Stator housing, complete
7 Motor foot
8 Terminal box adapter
9 Cable bushing
10 Lower terminal box section
11 Terminal board
12 Terminal box cover seal
13 Terminal box cover
14 Screwed cable glands
15 Rotor shaft, complete
16 Bearing cover NS*[2]
17 Rolling bearings NS*[2]
18 Cover plate NS*[2]
19 Sealing ring NS*[2]
20 Fan blade
21 Ventilation hood (with optional safety cover)

*[1] DS = Drive side

*[2] NS = Nondrive side

4.3 Connection, motor protection

Before connecting the explosion protected motor, check the following:

- **do the ratings on the type plate match the mains voltage and frequency?**
- **does the explosion protection match the environment in which the motor is operated (gas group, temperature class)?**

The electrical connections are established using the terminal box. The connection diagram (wiring diagram) is inside the terminal box.

Optionally the motors can be supplied with a motor cable instead of with a terminal box (⇨ catalogue).

If a standstill heating is present, the electrical controller has to ensure that the motor voltage and the heating voltage cannot be applied simultaneously.

The motor protection can be implemented with a motor protection switch or a thermal sensor (PTC, PTO, PT100).

For self-ventilated, single-speed motors in S1 mains operation with low-load and infrequent starts not causing any significant heating, a motor protection switch is a sufficient measure to comply with explosion protection requirements (temperature class).

Exclusive protection by temperature monitoring with thermal sensor for all modes other than S1 is only permitted in connection with a **certified** triggering device. These triggering devices must have been certified and marked by a notified body according to directive 2014/34/EU. The devices must be included in the regular monitoring by the operator.

4.4 Obligations and conditions

Some gap lengths of the spark-proof gap of this equipment are greater, and some gap widths of the spark-proof gap are smaller than required in Table 2 of EN/IEC 60079-1:2007. For information regarding the dimensions, please contact the manufacturer.

To connect the pressure proof encapsulation, use screws with a yield point of at least 640 N/mm^2.

Motors requiring direct temperature monitoring have to be monitored with a separately certified triggering device (see 4.3).

Make sure when operating a 3-phase motor with an external fan that the motor can only be run while the external fan is running. The external fan motor must comply with EPL Gb or Db.

Make sure not to exceed the permissible temperatures for the used components.

Only metal fan blades may be used if the temperature on the shaft journal in the fan blade area is >= 95°C during rated operation.

The manufacturer specifies the electrical parameters, the temperature class and the ambient temperature range of the respective version after a routine test.

4.5 Operation on the frequency converter

The motors of EX versions “pressure-proof encapsulation” Ex d(e) and “protection by housing” Ex t are approved for inverter operation. For approved versions, the possible frequency range must be obtained from the EU prototype test certificate.

The chart and the table below show and explain the most common curves for FI operation. The permissible torque at 50 Hz depends on the size, the number of poles and the performance; refer to the HEW catalogue “Explosion protected electric motors” (Part 20).

Permissible torque curve

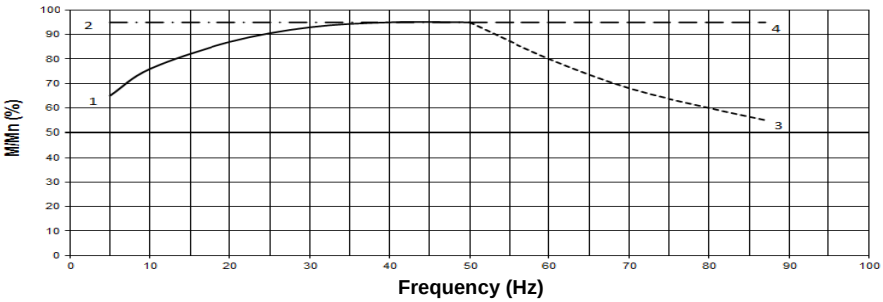

Characteristic curve	Frequency	Motor version	Motor voltage / circuit	Inverter	Ventilation	Torque curve in frequency range acc. to Catalogue Part 20
1	5 - 50 Hz	230/400 V 400/690V	400 V Y 400 V Δ	U/f=constant U/f=constant	internal fan	reduced
2	5 - 50 Hz	230/400 V 400/690V	400 V Y 400V Δ	U/f=constant U/f=constant	external ventilation	constant
3	50 - 87Hz	230/400 V 400/690V	400 V Y 400V Δ	U=constant U=constant	internal fan	drops with 1/f Field weakening operation
4	50 - 87Hz	230/400 V	230V Δ	U/f=constant	internal fan	constant 87 Hz curve

When the frequency range is specified in the order, the motors come with an additional plate indicating the FI operation data given on the right:
(Example: DCEx 112 M/4 K – 400 V Δ 50 Hz 4.0 kW)

DCEx 112 M/4 K / Motor number
40 V 5 Hz 0.24 kW Tperm.= 16 Nm
400 V 50 Hz 4.0 kW Tperm.= 27 Nm
400 V 87 Hz 4.0 kW Tperm.= 16 Nm

Sections 4.3 and 4.4 describe the motor protection for frequency inverter operation.

Use shielded cables to prevent electromagnetic interference.

We recommend using insulated bearings for motors of size 250 and greater.

Further information can be requested from the HEW headquarters in Herford at any time.

5 Transportation, packaging and storage

Suspended loads

WARNING!
Risk of fatal injury from suspended loads.

When lifting loads there is a risk of fatal injuries from falling parts or parts swinging uncontrolledly.

Therefore:

- Never stand under suspended loads.
- Only use the stipulated fastening points.
- Do not fasten lifting gear to protruding machine parts or the lugs on attached parts. Make sure the fastening equipment is securely fastened.
- Only use approved lifting gear and fastening equipment with sufficient load bearing capacity.
- Do not use any torn or frayed ropes or belts.
- Do not attach ropes and belts to sharp edges and corners. Do not knot or twist them.

Off-centre centre of gravity

WARNING!
Risk of falling due to an off-centre centre of gravity.

Packages may have an off-centre centre of gravity. If fastened incorrectly the package may tilt and cause potentially fatal injury.

Therefore:

- Adhere to the markings on the packages.
- Attach the crane hook so that it is directly above the centre of gravity.
- Lift cautiously and observe whether the load tilts. If necessary change the fastening.

Improper transportation

CAUTION!
Risk of damage in case of improper transportation.

Improper transportation can cause considerable material damage.

Therefore:

– When unloading delivered packages and when transporting on the premises, proceed with caution and adhere to the symbols and instructions on the packaging.
– Only use the fastening points provided.
– Do not remove the packaging until shortly before installation.

5.1 Delivery inspection

Inspect the delivery for damage and to make sure it is complete immediately after receiving it.

Proceed as follows in case of visual external damage:

- Refuse delivery or accept delivery provisionally.
- Make a note of the extent of damage in the shipping documents or on the carrier's delivery note.
- Make a claim.

NOTE!

Make a claim for every discrepancy as soon as it is discovered. Claims for compensation can only be asserted within the valid claims periods.

Explosion protection

EXPLOSION PROTECTION!

Transport damage can cause a loss of the explosion protection.

– Do not put the machine into operation in case of visible transport damage. Contact the manufacturer.

Failure to adhere to these instructions will lead to a loss of the explosion protection.

5.2 Transportation

Fastening points

- Use suitable lifting gear.
- Use the lifting eyebolts provided on the motor.
- To transport machine sets (e.g. gear units, fan attachments etc.) only use the lifting eyebolts and lugs provided. Machine sets must not be lifted by the individual machines.
- Remove any transport safety devices which protect from bearing damage before commissioning.

Transporting packages by crane

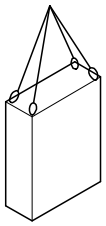

Fig. 7

Packages which have fastening eyebolts can be transported directly by crane on the following conditions:

- The crane and lifting gear must be designed for the weight of the packages.
- The operator must be authorised to operate the crane.

Fastening:

1. Fasten ropes, belts or multiple-point suspension gear according to Fig. 7.
2. Make sure that the package hangs straight, paying attention to the off-centre centre of gravity as necessary.
3. Begin transportation.

Transporting pallets by crane

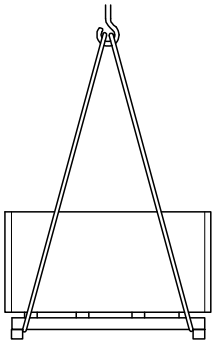

Fig. 8

Packages which are fastened to pallets can be transported by crane under the following conditions:

- The crane and lifting gear must be designed for the weight of the packages.
- The operator must be authorised to operate the crane.

Fastening:

1. Fasten ropes, belts or multiple-point suspension gear to the pallet according to Fig. 8.
2. Check that the packages are not damaged by the fastening equipment. If necessary use other fastening equipment.
3. Begin transportation.

Transporting pallets by forklift

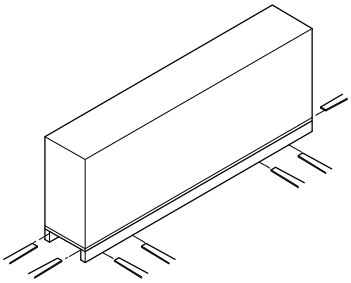

Fig. 9

Packages which are fastened to pallets can be transported by forklift under the following conditions:

- The forklift must be designed for the weight of the units for transportation.
- The driver must be authorised to drive the forklift.

Fastening:

1. Drive the forklift with the forks between or underneath the beams of the pallet.
2. Insert the forks so that they protrude on the opposite side.
3. Make sure that the pallet cannot tilt in case it has an off-centre centre of gravity.
4. Raise the package and begin transportation.

5.3 Packaging

Information on packaging

The individual packages are packaged appropriately for the expected transportation conditions. Only environmentally friendly materials have been used for packaging.

The packaging is designed to protect the individual parts from transport damage, corrosion and other damage up until they are installed. You must therefore not destroy the packaging and not remove it until shortly before installation.

Handling packaging materials

Dispose of packaging material in accordance with the respective valid laws and local regulations.

!

CAUTION!
Risk of environmental damage due to incorrect disposal.

Packaging materials are valuable raw materials and can be re-used in many cases or treated and recycled.

Therefore:

– Dispose of packaging material in an environmentally friendly manner.
– Adhere to the valid local regulations for disposal. Contract a specialist company to carry out disposal as necessary.

5.4 Storage

Storing packages

Store the packages under the following conditions:

- Do not store in the open.
- Keep in a dry and dust-free environment.
- Do not expose to any corrosive media.
- Protect from sunlight.
- Make sure to store in a low-vibration environment ($v_{eff} \leq 0.2$ mm/s)
- Avoid large fluctuations in storage temperature.
- Relative humidity: max. 60 %.
- Check the insulation resistance as necessary (⇨chapter "Checking the insulation resistance").
- Grease or replace the rolling bearings as necessary (⇨ chapter "Maintenance").
- When storing for longer than 3 months, regularly check the general condition of all parts and the packaging. If necessary, replenish or replace the conservation.

NOTE!

In some cases there will be instructions for storage on the packages informing you of further requirements going beyond those listed here. Adhere to these instructions accordingly.

6 Installation and commissioning

NOTE!
When installing and commissioning adhere to the current standards and directive for electrical apparatus for explosive gas atmospheres.

6.1 Safety

Staff

- Installation and commissioning must only be performed by specialist staff with the appropriate qualifications.
- Work on the electrical equipment must only be carried out by qualified electricians.

Personal safety equipment and clothing

Wear the following safety equipment and clothing for all installation and commissioning work:

- Occupational safety clothing
- Safety shoes

Explosion protection

EXPLOSION PROTECTION!
The introduction of ignition sources such as sparks, open flames and hot surfaces can cause explosions in the potentially explosive area. Therefore, when carrying out all installation work on the machine in the potentially explosive area:

– Do not start any installation work without a written permit.
– Only carry out installation work to the exclusion of a potentially explosive atmosphere.
– Only use tools which are approved for use in the potentially explosive area.

Failure to adhere to these instructions will lead to a loss of the explosion protection.

Electrical equipment

DANGER!
Danger to life from electrical current.

There is a risk of fatal injury from contact with live parts. Electrical components which are switched on can carry out uncontrolled movements and cause serious injuries.

Therefore:

– Before starting work switch off the electrical power supply and secure it to prevent it from being switched back on.

Securing the machine to prevent it from being switched back on

DANGER!
Risk of death from switching on without authorisation!

When performing installation there is a risk that the energy supply will be switched on without authorisation. This puts the life of people in the danger area at risk.

Therefore:

– Before beginning all work shut off all energy supplies and secure them to prevent them from being switched back on.

Improper installation and commissioning

WARNING!
Risk of injuries from improper installation and commissioning.

Improper installation and commissioning can cause serious personal injury and material damage.

Therefore:

– Before starting work make sure there is sufficient space for performing the installation work.
– Handle open, sharp-edged parts with care.
– Keep the installation area clean and tidy. Loose parts and tools stacked on top of each other or parts and tools left lying around are potential sources of accidents.
– Fit parts properly. Adhere to the stipulated tightening torque values for screws.
– Secure parts to prevent them from falling or toppling.

6.2 Installation

6.2.1 Ventilation at the location for use

The ventilation for the motor must not be obstructed.
You must therefore adhere to the following points:

- Makes rue that there is sufficient space between the motor fan and the walls and other similar obstructions.
- The clearance to obstructions must be at least d/4 (d = diameter of the motor).
- Make sure that the exhaust air is not sucked directly back in.
- In case of heavy soiling clean the air ways regularly.

6.2.2 Types of construction as per EN 60034-7

Type of construction and IM code (international mounting) of the most frequently used versions.

Type of construction	Symbol	Explanation
IM B3 IM 1001	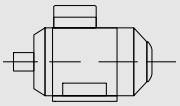	■ 2 bearing covers ■ with feet
IM V5 IM 1011	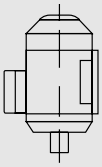	■ 2 bearing covers ■ with feet ■ Shaft end bottom ■ Fastening on the wall
IM V6 IM 1031	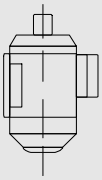	■ 2 bearing covers ■ with feet ■ Shaft end top ■ Fastening on the wall
IM B6 IM 1051	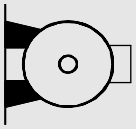	■ 2 bearing covers ■ with feet ■ Construction type IM B3 ■ Fastening on the wall ■ Feet left, viewed from drive side

Installation and commissioning

Type of construction	Symbol	Explanation
IM B7 IM 1061	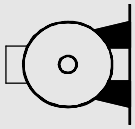	■ 2 bearing covers ■ with feet ■ Construction type IM B3 ■ Fastening on the wall ■ Feet right, viewed from drive side
IM B8 IM 1071		■ 2 bearing covers ■ with feet ■ Construction type IM B3 ■ Fastening on the ceiling
IM B35 IM 2001	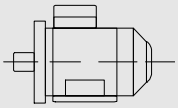	■ 2 bearing covers ■ with feet ■ Securing flange type A
IM B34 IM 2101	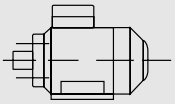	■ 2 bearing covers ■ with feet ■ Securing flange type C
IM B5 IM 3001	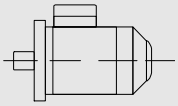	■ 2 bearing covers ■ without feet ■ Securing flange type A
IM V1 IM 3011	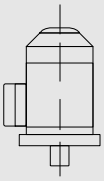	■ 2 bearing covers ■ without feet ■ Shaft end bottom ■ Securing flange type A
IM V3 IM 3031	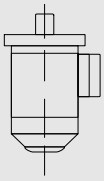	■ 2 bearing covers ■ without feet ■ Shaft end top ■ Securing flange type A
IM B14 IM 3601	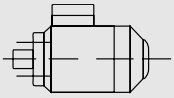	■ 2 bearing covers ■ without feet ■ Securing flange type C

Installation and commissioning

Type of construction	Symbol	Explanation
IM V18 IM 3611	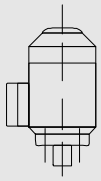	■ 2 bearing covers ■ without feet ■ Shaft end bottom ■ Securing flange type C
IM V19 IM 3631	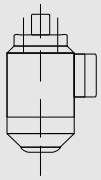	■ 2 bearing covers ■ without feet ■ Shaft end top ■ Securing flange type C
IM V6/IM V19	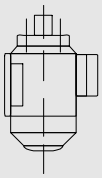	■ 2 bearing covers ■ with feet ■ Shaft end top ■ Securing flange type C
IM V36 IM 2031	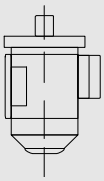	■ 2 bearing covers ■ with feet ■ Shaft end top ■ Securing flange type A
IM V5/IM V18	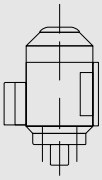	■ 2 bearing covers ■ with feet ■ Shaft end bottom ■ Securing flange type C
IM V15 IM 2011	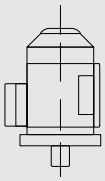	■ 2 bearing covers ■ with feet ■ Shaft end bottom ■ Securing flange type A

6.2.3 Erecting the machine

DANGER!
Risk of death due to insufficient protection classes.

Insufficient protection classes can lead to considerable material damage, serious personal injury or even death.

Therefore:

– Do not erect machines of protection class ≤ IP23 in the open.

In order to ensure that the machine runs quietly and with low vibrations make sure of the following when erecting the machine:

- the foundation must be stable
- the foundation's natural frequency with the machine must be sufficiently different to the rotary frequency and the double mains frequency
- the motors must be aligned accurately
- the drive machines must be well balanced

6.2.4 Installation

Installation varies depending on the construction type. In case you have any doubts contact the service department (⇨ page 2).

When installing, always pay attention to the following points:

- All connection elements (walls, ceilings etc.) must be of sufficient size.
- The rotor is dynamically balanced with a half feather key. Take this into account when balancing the drive element.
- Avoid incorrect belt tension (⇨ catalogue). Cover couplings and belt pulleys with a guard to protect accidental contact.
- Fit and remove drive elements (couplings, belt pulley, toothed wheels etc.) with the suitable devices.
- Tighten all screw connections with the appropriate tightening torque (⇨chapter "Tightening torque values for screws").
- Fit construction types with the shaft ends at the bottom with a cover to prevent foreign bodies from falling into the motor's fan.
- Any condensation drain holes must be positioned at the lowest point of the motor when installed and cleaned of any impurities.
- Take generally required measures for preventing accidental contacts between drive elements

6.3 Connecting to the energy supply

Electrical current

DANGER!
Danger to life from electrical current.

There is an immediate risk of fatal injury in case of contact with live parts. Damage to the insulation or individual components can mean danger to life.

Therefore:

- In case of damage to the insulation, switch off the power supply immediately and have repairs carried out.
- Have work on the electrical equipment carried out by qualified electricians only.
- When any work is carried out on the electrical equipment, disconnect it from the power and make sure it is free of voltage.
- Before carrying out maintenance, cleaning and repair work, switch off the power supply and secure it to prevent it from being switched back on.
- Do not jumper or disable any fuses or circuit breakers. When replacing fuses or circuit breakers make sure to adhere to the correct ampere rating.
- Keep moisture away from live parts. It can lead to a short circuit.

6.3.1 Screwed cable gland

NOTE!

Type Ex de motors are equipped with EEx e screwed cable glands. For type EEx d motors, the cable glands are not included in the scope of delivery. These must be adapted to the cable diameter on site.

NOTE!

Unused cable bushing openings must be sealed off with certified plugs with the matching IP protection type as shown on the type plate.

Ex d motors

1. Connection to the terminal box with these motors is implemented with a standard connection.
2. You must take great care when selecting the cable connection. It is imperative that the version is approved and approved for at least the protection class of the motor.
3. The type and dimensions of the cable connections must match the cable type and cable cross section.

Ex de motors

1. Strictly adhere to the directives and standards which apply to the terminal box connections of these motors. The type of cable connection must be approved.
2. Make sure that the supply cable is connected in line with the instructions of the wiring diagram in the terminal box.
3. Properly insert the seals on the terminal box into the grooves provided.
4. Creepage paths and air gaps must comply with EN 60079-7.

6.3.2 Voltage and circuit

- Adhere to the wiring specification on the type plate and wiring diagram in the terminal box.
- Compare the operating voltages and supply voltages.
- Motor rated voltages and the supply voltage must not differ ± 5 %; ± 2 % is permitted for the rated frequency.

6.3.3 Checking the insulation resistance

- To be performed by a qualified electrician only

DANGER!
Risk of death due to uncontrolled fault currents.

Insulation faults can call potentially fatal fault currents.

Therefore:

– The value of the insulation resistance must be higher than the critical value of 0.5 MΩ.
– In case the value drops below the critical insulation resistance, take the motor out of operation and shut it down immediately.

DANGER!
Danger to life from electrical current.

When measuring and immediately afterwards the terminals carry partly dangerous voltages.

Therefore:

– Do not touch the terminals.
– Discharge after measuring.

Before commissioning the motor, after a longer period of storage or without use, the insulation resistance of the coils has to be determined again. When doing so, adhere to the valid standards and directives.

6.4 Commissioning

DANGER!
Danger to life from electrical current.

There is an immediate risk of fatal injury in case of contact with live parts.

Therefore:

– Only carry out work with the plant free of voltage.
– Secure the plant to prevent it from being switched back on.

Installation and commissioning

CAUTION!
Risk of personal injury and/or material damage from feather keys ejected at speed.

When commissioning a motor without drive elements the feather keys may be ejected at speed.

Therefore:

– Before commissioning motors without drive elements remove or secure the feather keys beforehand.

Before commissioning make sure that:

- the minimum insulation resistance values are adhered to (⇨ chapter "Checking the insulation resistance").
- the protective earth conductor connection is properly established and, where necessary, a potential equalisation has been established (see DIN EN 60079-14, chapter 6.3)
- the rotor can be turned without rubbing.
- the motor is properly fitted and aligned.
- the drive elements have the right settings (e.g. belt tension for belt drive etc.)
- the drives are suitable for the conditions of use.
- all electrical connections, fastening screws and fastening elements are the right type and are tightened properly.
- measures to prevent accidental contacts for mowing and live parts have been taken.

NOTE!

Commissioning is performed using the overall plant control unit (⇨ Operating manual for the complete plant).

7 Operations

7.1 General information

During operation no staff are required in the machine area or in the direct vicinity to operate it.

Operation is performed using the overall plant control unit (⇨ Operating manual for the complete plant).

7.2 Shutting down in an emergency

In danger situations machine movements must be stopped as quickly as possible and the energy supply has to be switched off.

Shutting down in an emergency

In case of danger proceed as follows:

1. Trigger an emergency stop immediately.
2. Remove any people from the danger zone and administer first aid.
3. Alert a doctor and the fire services.
4. Inform the responsible party at the location.
5. Switch off the master switch and secure it to prevent it from being switched back on.
6. Keep access routes for emergency vehicles clear.

After emergency measures

7. If the seriousness of the emergency requires it, inform the respective authorities.
8. Have specialist staff remedy the fault.

WARNING!
Risk of death from switching on prematurely.
When switching back on there is a risk of fatal injury for all people in the danger area.
Therefore:
– Before switching back on make sure that there is nobody in the danger area.

9. Before re-starting check the plant and make sure that all safety devices are installed and fully functional.

8 Faults

The following chapter describes possible causes of faults and the work to eradicate them.

In case of faults which occur several times, reduce the maintenance interval accordingly to suit the actual strain.

In case of faults which cannot be cleared using the following instructions, contact the manufacturer, see service address on page 2.

8.1 Safety

Staff

- Some tasks can only be carried out by specialist staff with special qualifications or exclusively by the manufacturer. The description of the respective individual fault makes reference to this in each case.
- Work on the electrical equipment must only be carried out by qualified electricians.

Personal safety equipment and clothing

Wear the following safety equipment and clothing for all faults work:

- Occupational safety clothing
- Safety shoes

Explosion protection

EXPLOSION PROTECTION!

The introduction of ignition sources such as sparks, open flames and hot surfaces can cause explosions in the potentially explosive area. Therefore, when carrying out all work to remedy faults in the potentially explosive area:

– Do not start any work without a written permit.
– Only carry out work to remedy faults to the exclusion of a potentially explosive atmosphere.
– Only use tools which are approved for use in the potentially explosive area.

Failure to adhere to these instructions will lead to a loss of the explosion protection.

Faults

Electrical equipment

DANGER!
Danger to life from electrical current.

There is a risk of fatal injury from contact with live parts. Electrical components which are switched on can carry out uncontrolled movements and cause serious injuries.

Therefore:

– Before starting work switch off the electrical power supply and secure it to prevent it from being switched back on.

Securing the machine to prevent it from being switched back on

DANGER!
Risk of death from switching on without authorisation!

When working to remedy faults there is a risk that the energy supply will be switched on without authorisation. This puts the life of people in the danger area at risk.

Therefore:

– Before beginning all work shut off all energy supplies and secure them to prevent them from being switched back on.

Improper eradication of faults

WARNING!
Risk of injuries from incorrectly eradicating faults.

Eradicating faults incorrectly can cause serious personal injury and material damage.

Therefore:

– Before starting work make sure there is sufficient space for performing the installation work.
– Keep the installation area clean and tidy. Loose parts and tools stacked on top of each other or parts and tools left lying around are potential sources of accidents.
– If parts have been removed, make sure they are installed properly, re-install all fastening elements and adhere to the tightening torque values for screws.

How to act in case of faults

The following basic instructions apply:

1. In case of faults which pose an immediate risk to people or objects of material value, activate the emergency stop function immediately.
2. Determine the cause of the fault.
3. If eradicating the fault requires work in the danger area, switch off the plant and secure it to prevent it from being switched back on.
4. Inform the responsible party at the location of the fault immediately.
5. Depending on the type of fault, have it remedied by specialist staff or remedy it yourself.

NOTE!

The following fault table provides information on who is authorised to remedy the fault.

8.2 Fault table

Fault	Possible cause	Remedy	To be remedied by
■ Bearing is too warm	Too much grease in the bearing	Remove excessive grease	Qualified specialist
	Bearing is soiled	Replace the bearing	Manufacturer
	Belt tension too high	Reduce belt tension	Qualified specialist
	Bearing grease dark in colour	Check for bearing currents	Qualified specialist
■ Bearing is too warm ■ Motor is not running smoothly	Coupling forces are pulling or pushing	Align the motor exactly, adjust the coupling	Qualified specialist
■ Bearing is too warm ■ Bearing noises	Not enough grease in the bearing	Lubricate as stipulated	Qualified specialist
■ Bearing is too warm ■ Bearing noises ■ Motor is not running smoothly	Motor erected incorrectly	Check the motor construction type	Qualified specialist

Faults

Fault	Possible cause	Remedy	To be remedied by
■ Bearing noises	Scoring on inner bearing ring, e.g. from motor starting up with bearing locked	Replace bearing, avoid vibrations when at a standstill	Manufacturer
■ Motor is not running smoothly	Imbalance due to belt pulley or coupling	Balance exactly	Manufacturer
	Machine fastening insufficient	Check machine fastening	Qualified specialist
■ Motor does not start up ■ Considerable drop in speed	Load moment too high	Check motor torque and load moment	Qualified electrician
	Supply voltage too low	Check power supply conditions	Qualified electrician
■ Motor does not start up ■ Considerable drop in speed ■ Safety device is triggered	Phase interrupted	Check the mains connection	Qualified electrician
■ Motor does not start up ■ Motor is too warm ■ Considerable drop in speed ■ Safety device is triggered	Incorrect circuit	Adhere to wiring diagram and type plate	Qualified electrician
■ Motor is too warm ■ Considerable drop in speed ■ Safety device is triggered	Overload	Adhere to stipulations on type plate	Qualified electrician
■ Motor is too warm ■ Safety device is triggered	Too many switching actuations	Observe rated operating mode	Qualified electrician
■ Motor is too warm	Ventilation insufficient	Check cooling air routes, check direction of rotation	Qualified electrician
	Ventilation ducts soiled	Clean the ventilation ducts	Qualified specialist
■ Safety device is triggered	Coil or terminal short circuit	Measure the insulation resistance	Qualified electrician
	The start-up time has been exceeded	Check the start-up conditions	Qualified electrician

8.3 Commissioning after remedied fault

After remedying the fault carry out the following steps for re-commissioning:

1. Reset the emergency stop devices.
2. Acknowledge the fault on the control unit.
3. Make sure that there is nobody in the danger area.
4. Start by following the instructions in the chapter "Operation".

Explosion protection

EXPLOSION PROTECTION!

Introducing ignition sources such as sparks in the potentially explosive area can cause explosions. Therefore, after carrying out all work to remedy faults in the potentially explosive area:

- Make sure that all aggregates are connected to each other with potential equalisation of sufficient dimensions. To be performed by a qualified electrician only.
- Make sure that the motor is earthed to prevent static charging. To be performed by a qualified electrician only.

Failure to adhere to these instructions will lead to a loss of the explosion protection.

9 Maintenance

9.1 Safety

Staff

- The maintenance work described here can be carried out by the operator unless otherwise stated.
- Some maintenance tasks can only be carried out by specialist staff with special qualifications or exclusively by the manufacturer. The description of the respective individual maintenance task makes reference to this in each case.
- Work on the electrical equipment must only be carried out by qualified electricians.

Personal safety equipment and clothing

Wear the following safety equipment and clothing for all maintenance work:

- Occupational safety clothing
- Safety shoes

Explosion protection

EXPLOSION PROTECTION!

The introduction of ignition sources such as sparks, open flames and hot surfaces can cause explosions in the potentially explosive area. Therefore, when carrying out all maintenance work on the machine in the potentially explosive area:

– Do not start any maintenance work without a written permit.
– Only carry out maintenance work to the exclusion of a potentially explosive atmosphere.
– Only use tools which are approved for use in the potentially explosive area.

Failure to adhere to these instructions will lead to a loss of the explosion protection.

Electrical equipment

DANGER!
Danger to life from electrical current.

There is a risk of fatal injury from contact with live parts. Electrical components which are switched on can carry out uncontrolled movements and cause serious injuries.

Therefore:

– Before starting work switch off the electrical power supply and secure it to prevent it from being switched back on.

Securing the machine to prevent it from being switched back on

DANGER!
Risk of death from switching on without authorisation!

When performing maintenance there is a risk that the energy supply will be switched on without authorisation. This puts the life of people in the danger area at risk.

Therefore:

– Before beginning all work shut off all energy supplies and secure them to prevent them from being switched back on.

Improperly performed maintenance work

WARNING!
Risk of injury due to improperly performed maintenance work.

Performing maintenance incorrectly can cause serious personal injury and material damage.

Therefore:

– Before starting work make sure there is sufficient space for performing the installation work.
– Keep the installation area clean and tidy. Loose parts and tools stacked on top of each other or parts and tools left lying around are potential sources of accidents.
– If parts have been removed, make sure they are installed properly, re-install all fastening elements and adhere to the tightening torque values for screws.

Environmental protection

Adhere to the following instructions on environmental protection when performing maintenance work:

- At all lubricating points which are supplied with lubricant by hand, remove the expelled, used or excess grease and dispose of it in accordance with the local regulations.
- Collect replaced oil in suitable containers and dispose of it in accordance with the local regulations.

9.2 Cleaning

- Additionally required safety equipment and clothing:
  - Light breathing mask

Explosion protection

EXPLOSION PROTECTION!

Swirled up deposits of dust can form potentially explosive dust/air mixtures and when ignition sources are introduced, such as sparks, open flames and hot surfaces, can cause explosions in the potentially explosive area.

Therefore:

– Prevent layers of dust deposits from exceeding a thickness of 5 mm by regularly cleaning the location.
– Only carry out cleaning work to the exclusion of a potentially explosive atmosphere.
– Only use cleaning implements which are approved for use in the potentially explosive area.
– Wear personal safety equipment and clothing.

Failure to adhere to these instructions will lead to a loss of the explosion protection.

- Do not spray electrical machines with water or other liquids.
- Check the entire route for cooling air for soiling at least once a year.

9.3 Maintenance schedule

The next sections describe maintenance work which is required to ensure optimum and fault-free operation.

If during regular checks increased wear is identified, shorten the required maintenance intervals to match the actual signs of wear.

Maintenance

In case you have any questions on maintenance work and intervals, contact the manufacturer, see service address on page 2.

The standard version motors are fitted with permanently lubricated bearings.

Motors from construction type 160 and above can be fitted with lubricating equipment. The lubricating intervals depend on many influence factors. The values in the table below apply under normal operating conditions.

Before lubricating, remove the plug screw on the side opposite the grease nipple and screw it back in when finished.

NOTE!

In case of questions on lubrication, contact the manufacturer.
See page 2 for contact details.

Lubricating the ball bearings - intervals in operating hours

Size	Quantity of grease [g]	Speed [min^{-1}]					
		3600	3000	1800	1500	1000	500
160	25	7000	9500	14000	17000	21000	24000
180	30	6000	8000	13500	16000	20000	23000
200	40	4000	6000	11000	13000	17000	21000
225	50	3000	5000	10000	12500	16500	20000

9.4 Tightening torque values for screws

Explosion protection

EXPLOSION PROTECTION!

The introduction of ignition sources such as sparks, open flames and hot surfaces can cause explosions in the potentially explosive area. Therefore, when carrying out all maintenance work on the machine in the potentially explosive area:

- Do not start any maintenance work without a written permit.
- Only carry out maintenance work to the exclusion of a potentially explosive atmosphere.
- Only use tools which are approved for use in the potentially explosive area.

Failure to adhere to these instructions will lead to a loss of the explosion protection.

NOTE!

Strength class 8.8 screws must be used for all screwed connections which are used to seal the pressure-resistant space.

Replace screws which can no longer be used with new screws of the same type and strength class.

If not otherwise stated, the following tightening torque values apply for screw connections.

9.4.1 Tightening torque values for screws for electrical connections

Thread	Tightening torque value [Nm]	Thread	Tightening torque value [Nm]
M 4	1.2	M 12	15.5
M 5	2	M 16	30
M 6	3	M 20	52
M 8	6	M 24	80
M 10	10	M 30	150

9.4.2 Screw connections, property class 8.8 and A4-70

NOTE!
Only use tightening torque values for screws of property class 8.8 and A4-70 (A4-80) in high-strength parts (e.g. grey cast iron, steel).

Thread	Tightening torque value [Nm]	Thread	Tightening torque value [Nm]
M 4	2.3	M 14	105
M 5	4.6	M 16	160
M 6	7.9	M 20	330
M 8	19	M 24	560
M 10	38	M 30	1100
M 12	66	M 36	1900

9.4.3 Screw connections of property class 5.6

NOTE!
Only use tightening torque values for screws of property class 5.6, 4.6 A2 or for screws in low-strength parts (e.g. aluminium).

Thread	Tightening torque value [Nm]	Thread	Tightening torque value [Nm]
M 4	1.1	M 14	49
M 5	2.1	M 16	75
M 6	3.7	M 20	150
M 8	8.9	M 24	260
M 10	18	M 30	520
M 12	30	M 36	920

9.5 Measures on completion of maintenance

Explosion protection

EXPLOSION PROTECTION!

Introducing ignition sources such as sparks in the potentially explosive area can cause explosions. Therefore, after carrying out all maintenance work on the machine in the potentially explosive area:

– Make sure that all aggregates are connected to each other with potential equalisation of sufficient dimensions. To be performed by a qualified electrician only.

– Make sure that the motor is earthed to prevent static charging. To be performed by a qualified electrician only.

Failure to adhere to these instructions will lead to a loss of the explosion protection.

On completion of maintenance work, carry out the following steps before switching on:

1. Check that all screw connections which have been unfastened are fastened securely again.
2. Check whether all the safety devices and covers which have been removed have been properly re-installed.
3. Make sure that all tools, materials and other equipment which have been used, have been removed from the working area.
4. Clean the working area and remove any substances, e.g. liquids, processing material etc.
5. Make sure that all the plant's safety devices are in perfect working order.

10 Removal

Once the period of use has expired, the machine must be removed and disposed of in an environmentally friendly manner.

10.1 Safety

Staff

- The machine must only be removed by qualified specialist staff with the appropriate qualifications.
- Work on the electrical equipment must only be carried out by qualified electricians.

Explosion protection

EXPLOSION PROTECTION!

The introduction of ignition sources such as sparks, open flames and hot surfaces can cause explosions in the potentially explosive area. Therefore, when carrying out all removal work on the machine in the potentially explosive area:

– Do not start any removal work without a written permit.
– Only carry out removal work to the exclusion of a potentially explosive atmosphere.
– Only use tools which are approved for use in the potentially explosive area.

Failure to adhere to these instructions will lead to a loss of the explosion protection.

Electrical equipment

DANGER!
Danger to life from electrical current.

There is a risk of fatal injury from contact with live parts. Electrical components which are switched on can carry out uncontrolled movements and cause serious injuries.

Therefore:

– Before starting removal work switch off the electrical supply and disconnect it permanently.

Improper removal

WARNING!
Risk of injury from improper removal.

Stored residual energy, sharp parts, points and corners on and in the device or on the required tools can cause injuries.

Therefore:

- Before starting work make sure there is sufficient space.
- Handle open, sharp-edged parts with care.
- Keep the working area clean and tidy. Loose parts and tools stacked on top of each other or parts and tools left lying around are potential sources of accidents.
- Remove parts properly. Be aware that some parts have a heavy dead weight. Use lifting gear as necessary.
- Secure parts to prevent them from falling or toppling.
- In case of doubt, contact the manufacturer.

10.2 Removal

Before starting removal:

- Switch off the machine and secure it to prevent it from being switched back on.
- Physically disconnect the entire energy supply and discharge stored residual energy.
- Remove fuels and consumables and residual processing materials and dispose of them in an environmentally friendly manner.

Then clean assembly groups and parts properly and dismantle then in accordance with the local regulations for occupational safety and environmental protection.

10.3 Disposal

If no agreements have been made for return or disposal, have the dismantled components recycled:

- Have metals scrapped.
- Hand over plastic elements for recycling.
- Sort and dispose of other components according to the material properties.

CAUTION!
Risk of environmental damage due to incorrect disposal.
Electrical scrap, electronic components, lubricants and consumables require special waste treatment and must only be disposed of by approved specialist companies.

The local authorities or specialist disposal companies can provide information on environmentally friendly disposal.

Declaration of Conformity

(1) **EG-Baumusterprüfbescheinigung**

(2) Geräte und Schutzsysteme zur bestimmungsgemäßen Verwendung in explosionsgefährdeten Bereichen - Richtlinie 94/9/EG

(3) Nr. der EG-Baumusterprüfbescheinigung: **BVS 14 ATEX E 114 X**

(4) Gerät: **Druckfeste elektrische Motoren Typ D*Ex*** ***/**** ***

(5) Hersteller: **Herforder Elektromotoren-Werke GmbH & Co. KG**

(6) Anschrift: **Goebenstraße 106, 32051 Herford**

(7) Die Bauart dieses Gerätes sowie die verschiedenen zulässigen Ausführungen sind in der Anlage zu dieser Baumusterprüfbescheinigung festgelegt.

(8) Die Zertifizierungsstelle der DEKRA EXAM GmbH, benannte Stelle Nr. 0158 gemäß Artikel 9 der Richtlinie 94/9/EG des Europäischen Parlaments und des Rates vom 23. März 1994, bescheinigt, dass das Gerät die grundlegenden Sicherheits- und Gesundheitsanforderungen für die Konzeption und den Bau von Geräten und Schutzsystemen zur bestimmungsgemäßen Verwendung in explosionsgefährdeten Bereichen gemäß Anhang II der Richtlinie erfüllt. Die Ergebnisse der Prüfung sind in dem Prüfprotokoll BVS PP 14.2163 EG niedergelegt.

(9) Die grundlegenden Sicherheits- und Gesundheitsanforderungen werden erfüllt durch Übereinstimmung mit

EN 60079-0:2012	**Allgemeine Anforderungen**
EN 60079-1:2007	**Druckfeste Kapselung „d“**
EN 60079-7:2007	**Erhöhte Sicherheit „e“**
EN 60079-31:2009	**Schutz durch Gehäuse „t“**

(10) Falls das Zeichen „X“ hinter der Bescheinigungsnummer steht, wird in der Anlage zu dieser Bescheinigung auf besondere Bedingungen für die sichere Anwendung des Gerätes hingewiesen.

(11) Diese EG-Baumusterprüfbescheinigung bezieht sich nur auf die Konzeption und die Baumusterprüfung des beschriebenen Gerätes in Übereinstimmung mit der Richtlinie 94/9/EG.
Für Herstellung und Inverkehrbringen des Gerätes sind weitere Anforderungen der Richtlinie zu erfüllen, die nicht durch diese Bescheinigung abgedeckt sind.

(12) Die Kennzeichnung des Gerätes muss die folgenden Angaben enthalten:

II 2G	**Ex d IIC T* Gb**	**bzw.**	**Ex de IIC T* Gb**	**oder**
II 2G	**Ex d IIB T* Gb**	**bzw.**	**Ex de IIB T* Gb**	**oder**
II 2D	**Ex tb IIIC T* °C Db**			

* Siehe Parameter

DEKRA EXAM GmbH
Bochum, den 18.07.2014

Zertifizierungsstelle — Fachbereich

Seite 1 von 3 zu BVS 14 ATEX E 114 X
Dieses Zertifikat darf nur vollständig und unverändert weiterverbreitet werden.
DEKRA EXAM GmbH, Dinnendahlstraße 9, 44809 Bochum, Telefon +49.234.3696-105, Telefax +49.234.3696-110, zs-exam@dekra.com

(13) Anlage zur

(14) **EG-Baumusterprüfbescheinigung**
BVS 14 ATEX E 114 X

(15) 15.1 Gegenstand und Typ

Druckfeste elektrische Motoren Typ D*Ex*** ***/**** ***

Typenschlüssel zu D*[1)]Ex*[2)]*[2)] *[3)]*[3)]/*[4)]*[4)]*[4)] *[5)]*[5)]

[1)]: Explosionsgruppe
B: Druckfeste Kapselung für Gruppe IIB
C: Druckfeste Kapselung für Gruppe IIC
D: Druckfeste Kapselung für Gruppe IIC und einsetzbar in Bereichen explosionsfähiger Staubatmosphäre

[2)]: Baugröße

71	71 mm
80	80 mm
90	90 mm
100	100 mm
112	112 mm
132	132 mm
160	160 mm
180	180 mm
200	200 mm
225	225 mm

[3)]: Kennung Motorausführung

[4)]: Polzahl

[5)]: Kennung Temperaturüberwachung

15.2 Beschreibung

Die Gehäuse der druckfesten elektrischen Motoren bestehen aus Grauguss mit Anbaumöglichkeiten für Anschlusskästen.

Der Rotor wird über Wälzlager fixiert.

Die Wellenabdichtung wird über nichtmetallische Dichtungsringe aus Viton, für den Einsatz in Bereichen die ein EPL Db erfordern, hergestellt.

Der elektrische Anschluss des Motors erfolgt über einen Anschlussraum in der Zündschutzart Druckfeste Kapselung „d", Erhöhte Sicherheit „e", bzw. Schutz durch Gehäuse „tb" oder über eine direkte Leitungseinführung. Die Übertragung der elektrischen Energie in den Motorraum wird über gesondert bescheinigte Kabel- und Leitungseinführungen oder Aderleitungsdurchführungen realisiert.

Die Kühlung erfolgt mittels Außenlüfter aus Stahl, Aluminium oder Kunststoff. Der Antrieb des Außenlüfters erfolgt über die Welle der elektrischen Maschine oder über einen separat bescheinigten Lüftungsmotor.

Optional kann eine Stillstandsheizung innerhalb des Statorgehäuses montiert werden.

Für eine direkte Temperaturüberwachung der Windungen werden diese mit Temperatursensoren (Kaltleiter gemäß DIN 44081 beziehungsweise DIN 44082) bestückt. Die Sensoren sind in Reihe geschaltet.

Optional kann durch separat bescheinigte Widerstandsthermometer (Pt100) die Temperatur an den Wälzlagern erfasst werden.

Die Sensoren beziehungsweise die Thermometer müssen mit einer Auslöseeinheit, welche für diesen Zweck geeignet und bescheinigt ist, betrieben werden.

Der max. zulässige Umgebungstemperaturbereich beträgt -50 °C bis 85 °C. Dieser Bereich kann durch die Auswahl der Anschlusskästen, Komponenten oder durch die elektrische Auslegung eingeschränkt werden.

Dieses Zertifikat darf nur vollständig und unverändert weiterverbreitet werden.
DEKRA EXAM GmbH, Dinnendahlstraße 9, 44809 Bochum, Telefon +49.234.3696-105, Telefax +49.234.3696-110, zs-exam@dekra.com

15.3 Kenngrößen

Elektrische Kenngrößen

Stromkreise der Druckfesten elektrischen Motoren				
Bemessungsspannung				
Baugröße 71 - 225		bis	690	V AC
Baugröße 180 - 225		bis	1000	V AC
Bemessungsdrehzahl	500	bis	3600	min^{-1}
Bemessungsdrehzahl (mit Umrichter)	48	bis	6000	min^{-1}
Frequenz (Netz)			50 / 60	Hz
Frequenz (Umrichter)				
Baugröße 71 – 160	5	bis	100	Hz
Baugröße 180 - 225	5	bis	87	Hz
Betriebsart	S1	bis	S9	

Bemessungsleistung					
Baugröße		50 Hz		60 Hz	
71	bis	0.55	kW	0.66	kW
80	bis	1.1	kW	1.3	kW
90	bis	2.2	kW	2.6	kW
100	bis	3	kW	3.6	kW
112	bis	4	kW	4.8	kW
132	bis	7.5	kW	9	kW
160	bis	18.5	kW	21	kW
180	bis	22	kW	26	kW
200	bis	37	kW	42	kW
225	bis	45.5	kW	52	kW

Thermische Kenngrößen

Zündschutzart	Explosionsgruppe	Untere Grenze	Obere Grenze
Ex d	IIC	-50 °C	60 °C
	IIB	-50 °C	85 °C
Ex de	IIB / IIC	-20 °C	60 °C
Ex tb	IIIC	-30 °C	85 °C

Umgebungstemperaturbereich, Temperaturklasse und Oberflächentemperatur

Die elektrischen Kenngrößen, die Temperaturklasse, die Oberflächentemperatur und der Umgebungstemperaturbereich der entsprechenden Version werden im Rahmen der Stückprüfung beim Hersteller ermittelt.

(16) Prüfprotokoll

BVS PP 14.2163 EG, Stand 18.07.2014

(17) Besondere Bedingungen für die sichere Anwendung

Die Spaltlängen der zünddurchschlagsicheren Spalte dieses Betriebsmittels sind teils länger und die Spaltweiten der zünddurchschlagsicheren Spalte sind teils kleiner als in Tabelle 2 von EN 60079-1:2007 gefordert. Informationen zu den Abmessungen sind beim Hersteller zu erfragen.

Für den Abschluss des druckfesten Raumes sind Schrauben mit einer Streckgrenze von mindestens 640 N/mm^2 zulässig.

Motoren, die mit einer direkten Temperaturüberwachung ausgerüstet sein müssen, müssen über eine gesondert bescheinigte Auslöseeinheit überwacht werden.

Wenn der Drehstrommotor mit einem Fremdlüfter gekühlt wird, muss dafür Sorge getragen werden, dass er nur bei eingeschaltetem Fremdlüfter betrieben werden kann.

Dieses Zertifikat darf nur vollständig und unverändert weiterverbreitet werden.
DEKRA EXAM GmbH, Dinnendahlstraße 9, 44809 Bochum, Telefon +49.234.3696-105, Telefax +49.234.3696-110, zs-exam@dekra.com

Translation

(1) EC-Type Examination Certificate

(2) Equipment and protective systems intended for use in potentially explosive atmospheres - Directive 94/9/EC

(3) No. of EC-Type Examination Certificate: **BVS 14 ATEX E 114 X**

(4) Equipment: **Flameproof electric motors type D*Ex*** ***/**** ***

(5) Manufacturer: **Herforder Elektromotoren-Werke GmbH & Co. KG**

(6) Address: **Goebenstraße 106, 32051 Herford, Germany**

(7) The design and construction of this equipment and any acceptable variation thereto are specified in the appendix to this type examination certificate.

(8) The certification body of DEKRA EXAM GmbH, notified body no. 0158 in accordance with Article 9 of the Directive 94/9/EC of the European Parliament and the Council of 23 March 1994, certifies that this equipment has been found to comply with the Essential Health and Safety Requirements relating to the design and construction of equipment and protective systems intended for use in potentially explosive atmospheres, given in Annex II to the Directive. The examination and test results are recorded in the Test and Assessment Report BVS PP 14.2163 EG.

(9) The Essential Health and Safety Requirements are assured by compliance with:

EN 60079-0:2012	**General requirements**
EN 60079-1:2007	**Flameproof enclosure "d"**
EN 60079-7:2007	**Increased Safety "e"**
EN 60079-31:2009	**Protection by Enclosure "t"**

(10) If the sign "X" is placed after the certificate number, it indicates that the equipment is subject to special conditions for safe use specified in the appendix to this certificate.

(11) This EC-Type Examination Certificate relates only to the design, examination and tests of the specified equipment in accordance to Directive 94/9/EC.
Further requirements of the Directive apply to the manufacturing process and supply of this equipment. These are not covered by this certificate.

(12) The marking of the equipment shall include the following:

II 2G	**Ex d IIC T* Gb**	**resp.**	**Ex de IIC T* Gb**	**or**
II 2G	**Ex d IIB T* Gb**	**resp.**	**Ex de IIB T* Gb**	**or**
II 2D	**Ex tb IIIC T* °C Db**			

*) See parameters

DEKRA EXAM GmbH
Bochum, dated 2014-07-18

Signed: Simanski — Certification body

Signed: Dr. Wittler — Special services unit

Page 1 of 4 to BVS 14 ATEX E 114 X
This certificate may only be reproduced in its entirety and without change.
DEKRA EXAM GmbH Dinnendahlstrasse 9 44809 Bochum Germany Phone +49.234.3696-105 Fax +49.234.3696-110 zs-exam@dekra.com

(13) Appendix to

(14) **EC-Type Examination Certificate**
BVS 14 ATEX E 114 X

(15) 15.1 Subject and type

Flameproof electric motors type D*Ex*** ***/**** ***

Type designation to D*[1)]Ex*[2)]*[2)] *[3)]*[3)]/*[4)]*[4)]*[4)] *[5)]*[5)]

[1)]: Explosion group

B:	Flameproof enclosure for group IIB
C:	Flameproof enclosure for group IIC
D:	Flameproof enclosure for group IIC and applicable in presence of combustible dust

[2)]: Frame size

71	71 mm
80	80 mm
90	90 mm
100	100 mm
112	112 mm
132	132 mm
160	160 mm
180	180 mm
200	200 mm
225	225 mm

[3)]: Identifier for Motor-variation

[4)]: Quantity of poles

[5)]: Identifier for temperature control

15.2 Description

The enclosure of the flameproof electric motor is made of cast iron and has a mounting place for terminal boxes.

The shaft will be fixed with ball bearings.

The shaft sealing of the flameproof electric motor is realised by non-metallic sealing rings made of viton for use in areas requiring EPL Db.

A terminal compartment in type of protection Flameproof enclosure "d", Increased safety "e" or Protection by enclosure "tb" or a direct cable entry is used for electrical connection of the motor. For electric power input into the motor compartment, separately certified cable glands or conductor bushings are used.

The cooling of the motor is realised by an external fan that is made of steel, aluminium or plastic. The fan can be driven by the electrical machine itself or by a separately certified forced ventilation motor.

Optionally a space heater can be mounted inside the stator housing.

For direct temperature monitoring the winding of the motor is equipped with temperature sensors (thermistors according DIN 44081 respectively DIN 44082). The sensors are connected in series.

Optionally the temperature at the bearings could be monitored separately by certified resistance thermometers (Pt100).

The sensors respectively the thermometers will be connected to a trigger unit which is certified for this purpose.

The maximum permissible ambient temperatures are -50 °C to 85 °C. This temperature range may be limited as a result of the selected terminal boxes and components, or the electrical design.

This certificate may only be reproduced in its entirety and without change.
DEKRA EXAM GmbH Dinnendahlstrasse 9 44809 Bochum Germany Phone +49.234.3696-105 Fax +49.234.3696-110 zs-exam@dekra.com

15.3 Parameters

Electrical parameters

Circuits of the flameproof electric motors				
Rated voltage				
Frame size 71 - 225		up to	690	V AC
Frame size 180 - 225		up to	1000	V AC
Rated rotational speed	500	up to	3600	min^{-1}
Rated rotational speed (with converter)	48	up to	6000	min^{-1}
Frequency (mains)			50 / 60	Hz
Frequency (converter)				
Frame size 71 – 160	5	up to	100	Hz
Frame size 180 - 225	5	up to	87	Hz
Duty type	S1	up to	S9	

Rated power					
Frame size		50 Hz		60 Hz	
71	up to	0.55	kW	0.66	kW
80	up to	1.1	kW	1.3	kW
90	up to	2.2	kW	2.6	kW
100	up to	3	kW	3.6	kW
112	up to	4	kW	4.8	kW
132	up to	7.5	kW	9	kW
160	up to	18.5	kW	21	kW
180	up to	22	kW	26	kW
200	up to	37	kW	42	kW
225	up to	45.5	kW	52	kW

Monitoring circuit

Temperature sensors (ptc thermistors)	According to the specifications given in the certificate of the trigger unit and the electrical design.
Circuits of the resistance thermometer (Pt100)	According to the specifications given in the certificate of the trigger unit and the electrical design.

Thermal ratings

Type of protection	Explosiongroup	Lower limit	Upper limit
Ex d	IIC	-50 °C	60 °C
	IIB	-50 °C	85 °C
Ex de	IIB / IIC	-20 °C	60 °C
Ex tb	IIIC	-30 °C	85 °C

Ambient temperature range, temperature class and surface temperature

The electrical data, the temperature class, the surface temperature and the ambient temperature range of the respective version is determined by a routine test carried out by the manufacturer.

This certificate may only be reproduced in its entirety and without change.
DEKRA EXAM GmbH Dinnendahlstrasse 9 44809 Bochum Germany Phone +49.234.3696-105 Fax +49.234.3696-110 zs-exam@dekra.com

(16) Test and Assessment Report

BVS PP 14.2163 EG as of 2014-07-18

(17) Special conditions for safe use

The lengths of the flameproof joints are in parts longer and the gaps of the flameproof joints are in parts smaller than the values of table 2 of EN 60079-1:2007. For information of the dimensions of the flameproof joints contact the manufacturer.

Fasteners with a minimum yield stress of 640 N/mm^2 must be used for the closing of the flameproof enclosure.

Motors which have to be equipped with a direct temperature control must be monitored by a separate certified trigger unit.

If the electrical machine will be cooled by forced ventilation, it has to be assured that the electrical machine can only run if the ventilation is running.

We confirm the correctness of the translation from the German original.
In the case of arbitration only the German wording shall be valid and binding.

DEKRA EXAM GmbH
44809 Bochum, 2014-07-18
BVS-Sit/Ma A20140509

Certification body | Special services unit

This certificate may only be reproduced in its entirety and without change.
DEKRA EXAM GmbH Dinnendahlstrasse 9 44809 Bochum Germany Phone +49.234.3696-105 Fax +49.234.3696-110 zs-exam@dekra.com

Data sheets

DATA SHEET

Three Phase Induction Motor - Squirrel Cage

Customer	:
Product line	: W22Xdb Flameproof - High Efficiency IE2 Multivoltage
Product code	: 15056920

Frame	: 112M	Cooling method	: TEFC-XP
Insulation class	: F	Mounting	: B5T
Duty cycle	: S1	Direct of rotation¹	: Both
Ambient temperature	: -20 °C to +40 °C	Starting method	: Direct On Line
Altitude	: 1000 m.a.s.l	Approx. weight³	: 72.5 kg
Degree of protection	: IP56	Moment of inertia (J)	: 0.0156 kgm²
Design	: N		

Output		4 kW	4 kW	4 kW
Poles		4	4	4
Frequency		50 Hz	50 Hz	50 Hz
Rated voltage		380/660 V	400/690 V	415 V
Rated current		8.56/4.93 A	8.32/4.82 A	8.20 A
L. R. Amperes		52.2/30.1 A	54.9/31.8 A	58.2 A
LRC (p.u.)		6.1	6.6	7.1
No load current		3.50/2.02 A	4.00/2.32 A	4.40 A
Rated speed		1430 rpm	1440 rpm	1445 rpm
Slip		4.67 %	4.00 %	3.67 %
Rated torque		26.7 Nm	26.5 Nm	26.4 Nm
Locked rotor torque		190 %	220 %	240 %
Breakdown torque		230 %	260 %	280 %
Service factor		1.00	1.00	1.00
Noise level²		56.0 dB(A)	56.0 dB(A)	56.0 dB(A)
Locked rotor time		11 s (hot) 20 s (cold)	13 s (hot) 23 s (cold)	14 s (hot) 25 s (cold)
Efficiency (%)	50%	86.5	86.0	85.3
	75%	86.6	86.7	86.6
	100%	86.6	86.7	87.0
Power factor	Start	0.58	0.58	0.58
	50%	0.67	0.62	0.58
	75%	0.78	0.74	0.71
	100%	0.82	0.80	0.78

	Drive end	Non drive end
Bearing type	6207-ZZ	6206-ZZ
Lubrication interval	-	-
Lubricant amount	-	-
Lubricant type	MOBIL POLYREX EM	

Foundation loads

Maximum traction	: 1203 N
Maximum compression	: 1915 N

This revision replaces and cancels the previous one, which must be eliminated.

(1) When viewed from the drive end.

(2) Measured at 1m and with tolerance of +3dB(A).

(3) Approximate weight subject to changes after manufacturing process.

(4) At the rated point.

These are average values based on tests with sinusoidal power supply, subject to the tolerances stipulated in IEC 60034-1.

Rev.	Summary of changes	Performed	Checked	Date

Performed by	sengels		177176/2020-A	
Checked by	AUTOMATICO		Page	Revision
Date	29/04/2020		1/2	0

This document is exclusive property of WEG S/A. Reprinting is not allowed without written authorization.

DATA SHEET

Three Phase Induction Motor - Squirrel Cage

Customer :

Product line : W22Xdb Flameproof - High Efficiency IE2 Multivoltage Product code : 15056920

Thermal protection

ID	Application	Type	Quantity	Switching temperature
01	Winding	Thermistor - 2 Wires	1 x Phase	150 °C

Space heater information

Voltage: 200-240 V
Output: 18-26 W

Standards

Specification : IEC 60034-1
Tests : IEC 60034-2
Noise : IEC 60034-9
Vibration : IEC 60034-14
Tolerance : IEC 60034-1

Rev.	Summary of changes	Performed	Checked	Date

Performed by	sengels		177176/2020-A	
Checked by	AUTOMATICO		Page	Revision
Date	29/04/2020		2/2	0

This document is exclusive property of WEG S/A. Reprinting is not allowed without written authorization.

A.3.2 Coupling

Name	Data
Designation	Torsionally flixible jaw-type couplings
Type	Rotex
Number	
Type of manual	*Technical documentation*
Manufacturer	KTR Systems GmbH

A.3.2.1 Operating instructions

D.0037480001

Betriebs-/Montageanleitung: KTR-N 40210 DE

Operating/Assembly instructions: KTR-N 40210 EN

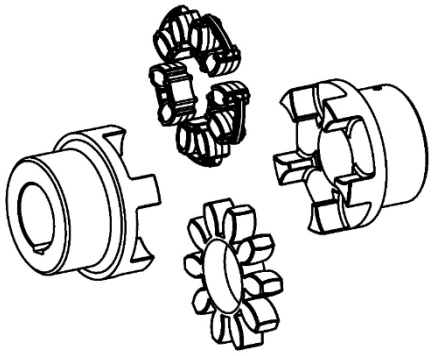

ROTEX®

Drehelastische Klauenkupplung

Torsionally flexible jaw-type couplings

88037480001-23

Deutsch/Englisch

2019-10-22

KRACHT

KTR-Group	ROTEX® Operating/Assembly instructions	KTR-N 40210 EN Sheet: 1 of 27 Edition: 23

ROTEX®

Torsionally flexible jaw couplings type
No. 001 - shaft coupling,
No. 018 - DKM,
with taper clamping sleeve
and their combinations

according to directive 2014/34/EU

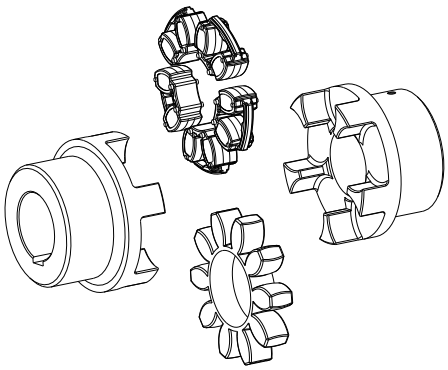

Type No. 001 - shaft coupling

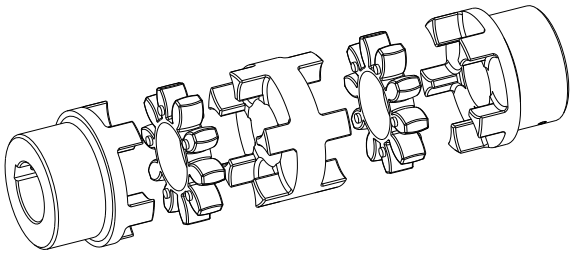

Type No. 018 - DKM
double-cardanic coupling

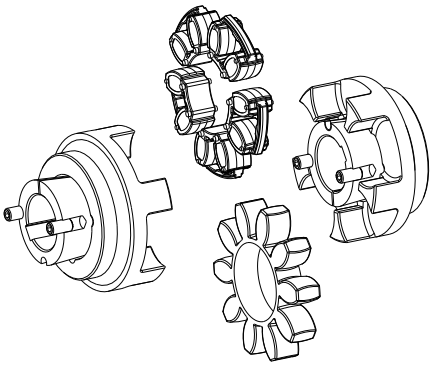

Type with taper clamping sleeve

Please observe protection note ISO 16016.	Drawn: 2019-07-02 Pz/Wb	Replacing: KTR-N dated 2017-09-06
	Verified: 2019-07-23 Pz	Replaced by:

KTR-Group	ROTEX® Operating/Assembly instructions	KTR-N 40210 EN Sheet: 2 of 27 Edition: 23

ROTEX® is a torsionally flexible jaw coupling. It is able to compensate for shaft misalignment, for example caused by manufacturing inaccuracies, thermal expansion, etc.

Table of contents

1 Technical data 3

2 Advice 7

2.1 General advice 7
2.2 Safety and advice symbols 8
2.3 General hazard warnings 8
2.4 Intended use 8
2.5 Coupling selection 9
2.6 Reference to EC Machinery Directive 2006/42/EC 9

3 Storage, transport and packaging 9

3.1 Storage 9
3.2 Transport and packaging 9

4 Assembly 10

4.1 Components of the coupling 10
4.2 Advice for finish bore 11
4.3 Assembly of the hubs 12
4.4 Assembly of taper clamping sleeve 13
4.5 Displacements - alignment of the couplings 14

5 Start-up 16

6 Breakdowns, causes and elimination 17

7 Disposal 19

8 Maintenance and service 19

9 Spares inventory, customer service addresses 19

10 Enclosure A

Advice and instructions regarding the use in Ex potentially explosive atmospheres 20

10.1 Intended use in Ex potentially explosive atmospheres 21

10.2 Inspection intervals for couplings in Ex potentially explosive atmospheres 22
10.3 Standard values of wear 24

10.4 Ex marking of coupling for potentially explosive atmospheres 25
10.5 EU Certificate of conformity 27

Please observe protection note ISO 16016.	Drawn: 2019-07-02 Pz/Wb	Replacing: KTR-N dated 2017-09-06
	Verified: 2019-07-23 Pz	Replaced by:

KTR-Group	ROTEX® Operating/Assembly instructions	KTR-N 40210 EN Sheet: 3 of 27 Edition: 23

1 Technical data

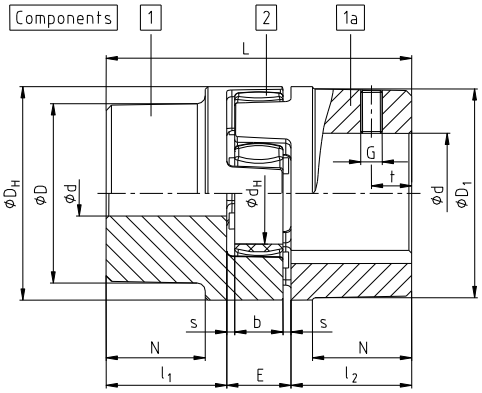

Illustration 1: ROTEX® (material: powder metal, Al-D and Al-H)

Table 1: Material powder metal steel (Sint)

Size	Com-ponent	Spider [1] (component 2) Rated torque [Nm]			Dimensions [mm] [3]											
					Finish bore [2]	General										
		92 ShA	98 ShA	64 ShD	d (min-max)	L	l_1, l_2	E	b	s	D_H	D_Z	D_{Z1} [4]	d_H	D_1	N
14	1a	7.5	12.5	-	6 - 16	35	11	13	10	1.5	30	-	-	10	-	-
19	1a	10	17	-	6 - 24	66	25	16	12	2.0	40	-	-	18	-	-
24	1a	34	60	-	9 - 28	78	30	18	14	2.0	56	-	-	27	-	-

Table 2: Material aluminium diecast (Al-D) - no approval for ATEX

Size	Com-ponent	Spider [1] (component 2) Rated torque [Nm]			Dimensions [mm] [3]											
					Finish bore [2]	General										
		92 ShA	98 ShA	64 ShD	d (min-max)	L	l_1, l_2	E	b	s	D_H	D_Z	D_{Z1} [4]	d_H	D, D_1	N
19	1	10	17	-	6 - 19	66	25	16	12	2.0	41	-	-	18	32	20
	1a				19 - 24										41	
24	1	35	60	-	9 - 24	78	30	18	14	2.0	56	-	-	27	40	24
	1a				22 - 28										56	
28	1	95	160	-	10 - 28	90	35	20	15	2.5	67	-	-	30	48	28
	1a				28 - 38										67	

Table 3: Material aluminium (Al-H)

Size	Com-ponent	Spider [1] (component 2) Rated torque [Nm]			Dimensions [mm] [3]											
					Finish bore [2]	General										
		92 ShA	98 ShA	64 ShD	d (min-max)	L	l_1, l_2	E	b	s	D_H	D_Z	D_{Z1} [4]	d_H	D_1	N
5	1a	0.5	0.9	-	0 - 6	15	5	5	4	0.5	10	-	-	-	-	-
7	1a	1.2	2.0	2.4	0 - 7	22	7	8	6	1.0	14	-	-	-	-	-
9	1a	3.0	5.0	6.0	0 - 11	30	10	10	8	1.0	20	-	-	7.2	-	-
12	1a	5.0	9.0	12	0 - 12	34	11	12	10	1.0	25	-	-	8.5	-	-
14	1a	7.5	12.5	16	0 - 16	35	11	13	10	1.5	30	-	-	10.5	-	-
19	1a	10	17	26	0 - 24	66	25	16	12	2.0	40	-	-	18	-	-
24	1a	35	60	75	0 - 28	78	30	18	14	2.0	55	-	-	27	-	-
28	1a	95	160	200	0 - 38	90	35	20	15	2.5	65	-	-	30	-	-
38	1a	190	325	405	0 - 45	114	45	24	18	3.0	80	-	-	38	-	-
42	1a	265	450	560	0 - 55	126	50	26	20	3.0	95	-	-	46	-	-
48	1a	310	525	655	0 - 62	140	56	28	21	3.0	105	-	-	51	-	-

1) Maximum torque of the coupling $T_{Kmax.}$ = rated torque of the coupling $T_{K\,rated}$ x 2
2) Bores H7 with keyway to DIN 6885 sheet 1 [JS9] and setscrew
3) For dimensions G and t see table 8; there is a setscrew on the keyway (only with Al-D opposite the keyway)
4) D_{Z1} = internal diameter of housing

Please observe protection note ISO 16016.	Drawn: 2019-07-02 Pz/Wb	Replacing: KTR-N dated 2017-09-06
	Verified: 2019-07-23 Pz	Replaced by:

KTR-Group	ROTEX® Operating/Assembly instructions	KTR-N 40210 EN Sheet: 4 of 27 Edition: 23

1 Technical data

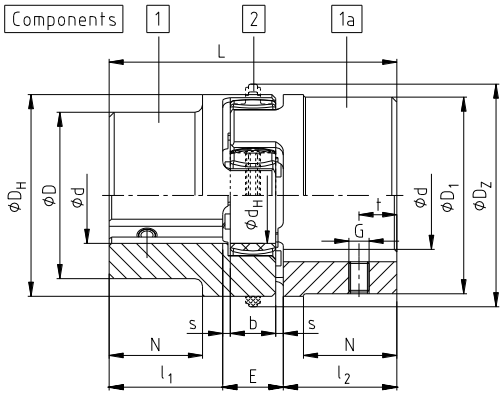

Illustration 2: ROTEX® (material: GJL/GJS)

Table 4: Material cast iron (GJL)/nodular iron (GJS)

Size	Component	Spider [1] (component 2) Rated torque [Nm]			Dimensions [mm] [3]											
					Finish bore [2] d (min-max)	General										
		92 ShA	98 ShA	64 ShD		L	l_1, l_2	E	b	s	D_H	D_Z	D_{Z1} [4]	d_H	D, D_1	N
Cast iron (GJL)																
38	1	190	325	405	12 - 40	114	45	24	18	3.0	80	-	-	38	66	37
	1a				38 - 48										78	
	1b				12 - 48	164	70									62
42	1	265	450	560	14 - 45	126	50	26	20	3.0	95	-	-	46	75	40
	1a				42 - 55										94	
	1b				14 - 55	176	75									65
48	1	310	525	655	15 - 52	140	56	28	21	3.5	105	-	-	51	85	45
	1a				48 - 62										104	
	1b				15 - 62	188	80									69
55	1	410	685	825	20 - 60	160	65	30	22	4.0	120	-	-	60	98	52
	1a				55 - 74										118	
65	1	625	940	1175	22 - 70	185	75	35	26	4.5	135	-	-	68	115	61
75	1	1280	1920	2400	30 - 80	210	85	40	30	5.0	160	-	-	80	135	69
90	1	2400	3600	4500	40 - 97	245	100	45	34	5.5	200	218	230	100	160	81
Nodular iron (GJS)																
100	1	3300	4950	6185	50 - 115	270	110	50	38	6.0	225	246	260	113	180	89
110	1	4800	7200	9000	60 - 125	295	120	55	42	6.5	255	276	290	127	200	96
125	1	6650	10000	12500	60 - 145	340	140	60	46	7.0	290	315	330	147	230	112
140	1	8550	12800	16000	60 - 160	375	155	65	50	7.5	320	345	360	165	255	124
160	1	12800	19200	24000	80 - 185	425	175	75	57	9.0	370	400	415	190	290	140
180	1	18650	28000	35000	85 - 200	475	185	85	64	10.5	420	450	465	220	325	156

1) Maximum torque of the coupling $T_{Kmax.}$ = rated torque of the coupling $T_{K\,rated}$ x 2
2) Bores H7 with keyway to DIN 6885 sheet 1 [JS9] and setscrew
3) For dimensions G and t see table 8; there is a setscrew on the keyway
4) D_{Z1} = internal diameter of housing

Please observe protection note ISO 16016.	Drawn: 2019-07-02 Pz/Wb	Replacing: KTR-N dated 2017-09-06
	Verified: 2019-07-23 Pz	Replaced by:

KTR-Group	ROTEX® Operating/Assembly instructions	KTR-N 40210 EN Sheet: 5 of 27 Edition: 23

1 Technical data

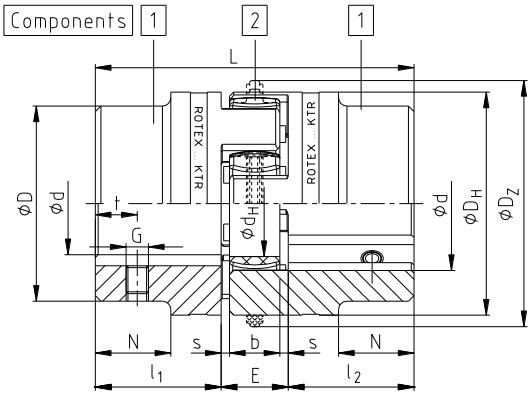

Illustration 3: ROTEX® (material: steel)

Table 5: Material steel

Size	Component	Spider [1] (component 2) Rated torque [Nm]			Dimensions [mm] [3]											
					Finish bore [2] d (min-max)	General										
		92 ShA	98 ShA	64 ShD		L	l_1, l_2	E	b	s	D_H	D_Z	D_{Z1} [4]	d_H	D	N
14	1a	7.5	12.5	16	0 - 16	35	11	13	10	1.5	30	-	-	10	30	-
	1b					50	18.5									
19	1a	10	17	21	0 - 25	66	25	16	12	2.0	40	-	-	18	40	-
	1b					90	37									
24	1a	35	60	75	0 - 35	78	30	18	14	2.0	55	-	-	27	55	-
	1b					118	50									
28	1a	95	160	200	0 - 40	90	35	20	15	2.5	65	-	-	30	65	-
	1b					140	60									
38	1	190	325	405	0 - 48	114	45	24	18	3.0	80	-	-	38	70	27
	1b					164	70								80	-
42	1	265	450	560	0 - 55	126	50	26	20	3.0	95	-	-	46	85	28
	1b					176	75								95	-
48	1	310	525	655	0 - 62	140	56	28	21	3.5	105	-	-	51	95	32
	1b					188	80								105	-
55	1	410	685	825	0 - 75	160	65	30	22	4.0	120	-	-	60	110	37
	1b					210	90								120	-
65	1	625	940	1175	0 - 80	185	75	35	26	4.5	135	-	-	68	115	47
	1b					235	100								135	-
75	1	1280	1920	2400	0 - 95	210	85	40	30	5.0	160	-	-	80	135	53
	1b					260	110								160	-
90	1	2400	3600	4500	0 - 110	245	100	45	34	5.5	200	218	230	100	160	62
	1b					295	125								200	-
100	1	3300	4950	6185	0 - 115	270	110	50	38	6.0	225	246	260	113	180	89
110	1	4800	7200	9000	0 - 125	295	120	55	42	6.5	255	276	290	127	200	96
125	1	6650	10000	12500	60 - 145	340	140	60	46	7.0	290	315	330	147	230	112
140	1	8550	12800	16000	60 - 160	375	155	65	50	7.5	320	345	360	165	255	124
160	1	12800	19200	24000	80 - 185	425	175	75	57	9.0	370	400	415	190	290	140
180	1	18650	28000	35000	85 - 200	475	195	85	64	10.5	420	450	465	220	325	156

1) Maximum torque of the coupling $T_{Kmax.}$ = rated torque of the coupling $T_{K\,rated}$ x 2
2) Bores H7 with keyway to DIN 6885 sheet 1 [JS9] and setscrew
3) For dimensions G and t see table 8; there is a setscrew on the keyway
4) D_{Z1} = internal diameter of housing

Please observe protection note ISO 16016.	Drawn: 2019-07-02 Pz/Wb	Replacing: KTR-N dated 2017-09-06
	Verified: 2019-07-23 Pz	Replaced by:

KTR-Group	ROTEX® Operating/Assembly instructions	KTR-N 40210 EN Sheet: 6 of 27 Edition: 23

1 Technical data

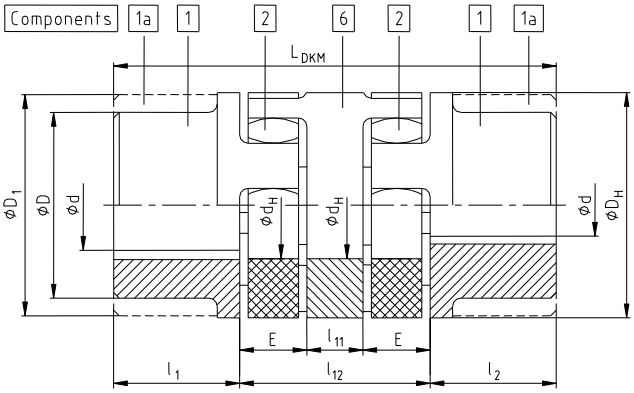

Illustration 4: ROTEX® type DKM

Table 6: Type DKM 5)

Size	Spider 1) (component 2) Rated torque [Nm]		Dimensions [mm] 3)									
			Dimensions	General								
	92 ShA	98 ShA	d, D, D_1	L_{DKM}	l_1, l_2	E	b	s	D_H	d_H	l11	l12
19	10	17	see table 1 to 5	92	25	16	12	2.0	40	18	10	42
24	35	60		112	30	18	14	2.0	55	27	16	52
28	95	160		128	35	20	15	2.5	65	30	18	58
38	190	325		158	45	24	18	3.0	80	38	20	68
42	265	450		174	50	26	20	3.0	95	46	22	74
48	310	525		192	56	28	21	3.5	105	51	24	80
55	410	685		218	65	30	22	4.0	120	60	28	88
65	625	940		252	75	35	26	4.5	135	68	32	102
75	1280	1920		286	85	40	30	5.0	160	80	36	116
90	2400	3600		330	100	45	34	5.5	200	100	40	130

1) Maximum torque of the coupling $T_{Kmax.}$ = rated torque of the coupling $T_{K\,rated}$ x 2
2) Bores H7 with keyway to DIN 6885 sheet 1 [JS9] and setscrew
3) For dimensions G and t see table 8; there is a setscrew on the keyway (only with Al-D opposite the keyway)

Please observe protection note ISO 16016.	Drawn: 2019-07-02 Pz/Wb	Replacing: KTR-N dated 2017-09-06
	Verified: 2019-07-23 Pz	Replaced by:

KTR-Group	ROTEX® Operating/Assembly instructions	KTR-N 40210 EN Sheet: 7 of 27 Edition: 23

1 Technical data

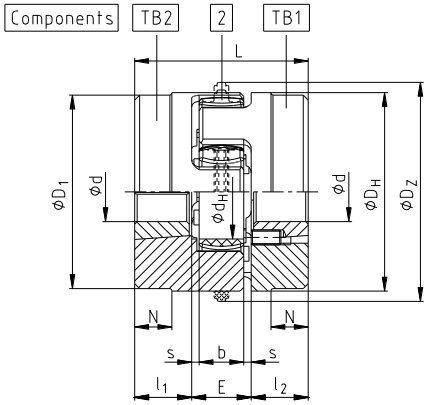

Illustration 5: ROTEX® type with taper clamping sleeve

Coupling design:

TB1 Screwing on cam side
TB2 Screwing on collar side

Different combinations of types TB1 and TB2 are possible.

Table 7: Type with taper clamping sleeve

Size	Component	Spider [1] (component 2) Rated torque [Nm]		Dimensions [mm]													Taper clamping sleeve
				Finish bore d (min-max)	General												
		92 ShA	98 ShA		L	l_1, l_2	E	b	s	D_H	D_Z	D_{Z1} [2]	d_H	D_1	N		
24	1a	35	60	10 - 25	64	23	18	14	2.0	55	-	-	27	-	-		1008
28	1a	95	160	10 - 25	66	23	20	15	2.5	65	-	-	30	-	-		1108
38	1a	190	325	10 - 25	70	23	24	18	3.0	80	-	-	38	78	15		1108
42	1a	265	450	14 - 25	78	26	26	20	3.0	95	-	-	46	94	16		1610
48	1a	310	525	14 - 40	106	39	28	21	3.5	105	-	-	51	104	28		1615
55	1a	410	685	14 - 50	96	33	30	22	4.0	120	-	-	60	118	20		2012
65	1	625	940	14 - 50	101	33	35	26	4.5	135	-	-	68	115	5		2012
75	1	1280	1920	16 - 60	144	52	40	30	5.0	160	-	-	80	158	36		2517
				25 - 75													3020 [3]
90	1	2400	3600	25 - 75	149	52	45	34	5.5	200	218	230	100	160	14		3020
100	1	3300	4950	35 - 90	230	90	50	38	6.0	225	246	260	113	180	69		3535
125	1	6650	10000	55 - 110	288	114	60	46	7.0	290	315	330	147	230	86		4545

1) Maximum torque of the coupling $T_{Kmax.}$ = rated torque of the coupling $T_{K\,rated}$ x 2
2) D_{Z1} = internal diameter of housing
3) Available for type TB2 only

ROTEX® couplings with attachments that can generate heat, sparks and static charging (e. g. combinations with brake drums, brake disks, overload systems such as torque limiters, fan impellers etc.) are <u>not</u> permitted for the use in potentially explosive atmospheres.
A separate analysis must be performed.

2 Advice

2.1 General advice

Please read through these operating/assembly instructions carefully before you start up the coupling.
Please pay special attention to the safety instructions!

The **ROTEX®** coupling is suitable and approved for the use in potentially explosive atmospheres. When using the coupling in potentially explosive atmospheres, observe the special advice and instructions regarding safety in enclosure A.

The operating/assembly instructions are part of your product. Please store them carefully and close to the coupling. The copyright for these operating/assembly instructions remains with KTR.

Please observe protection note ISO 16016.	Drawn: 2019-07-02 Pz/Wb	Replacing: KTR-N dated 2017-09-06
	Verified: 2019-07-23 Pz	Replaced by:

2 Advice

2.2 Safety and advice symbols

	Warning of potentially explosive atmospheres	This symbol indicates notes which may contribute to preventing bodily injuries or serious bodily injuries that may result in death caused by explosion.
	Warning of personal injury	This symbol indicates notes which may contribute to preventing bodily injuries or serious bodily injuries that may result in death.
	Warning of product damages	This symbol indicates notes which may contribute to preventing material or machine damage.
	General advice	This symbol indicates notes which may contribute to preventing adverse results or conditions.
	Warning of hot surfaces	This symbol indicates notes which may contribute to preventing burns with hot surfaces resulting in light to serious bodily injuries.

2.3 General hazard warnings

With assembly, operation and maintenance of the coupling it has to be made sure that the entire drive train is secured against accidental switch-on. You may be seriously hurt by rotating parts. Please make absolutely sure to read through and observe the following safety indications.

- All operations on and with the coupling have to be performed taking into account "safety first".
- Please make sure to switch off the power pack before you perform your work on the coupling.
- Secure the power pack against accidental switch-on, e. g. by providing warning signs at the place of switch-on or removing the fuse for current supply.
- Do not reach into the operating area of the coupling as long as it is in operation.
- Please secure the coupling against accidental contact. Please provide for the necessary protection devices and covers.

2.4 Intended use

You may only assemble, operate and maintain the coupling if you

- have carefully read through the operating/assembly instructions and understood them
- are technically qualified and specifically trained (e. g. safety, environment, logistics)
- are authorized by your company

The coupling may only be used in accordance with the technical data (see chapter 1). Unauthorized modifications on the coupling design are not admissible. We will not assume liability for any damage that may arise. In the interest of further development we reserve the right for technical modifications.
The **ROTEX®** described in here corresponds to the technical status at the time of printing of these operating/assembly instructions.

2 Advice

2.5 Coupling selection

For a permanent and failure-free operation of the coupling it must be selected according to the selection instructions (according to DIN 740 part 2) for the particular application (see catalogue drive technology "ROTEX®").
If the operating conditions (performance, speed, modifications on engine and machine) change, the coupling selection must imperatively be reviewed.
Please make sure that the technical data regarding torque refer to the spider only. The transmittable torque of the shaft-hub-connection must be reviewed by the customer and is subject to his responsibility.

For drives subject to torsional vibrations (drives with cyclic stress due to torsional vibrations) it is necessary to perform a torsional vibration calculation to ensure a reliable selection. Typical drives subject to torsional vibrations are e. g. drives with diesel engines, piston pumps, piston compressors etc. If requested, KTR will perform the coupling selection and the torsional vibration calculation.

2.6 Reference to EC Machinery Directive 2006/42/EC

The couplings supplied by KTR should be considered as components, not machines or partly completed machines according to EC Machinery Directive 2006/42/EC. Consequently KTR does not have to issue a declaration of incorporation. For details about safe assembly, start-up and safe operation refer to the present operating/assembly instructions considering the warnings.

3 Storage, transport and packaging

3.1 Storage

The coupling hubs are supplied in preserved condition and can be stored at a dry and roofed place for 6 - 9 months.
The features of the coupling spiders (elastomers) remain unchanged for up to 5 years with favourable storage conditions.

The storage rooms must not include any ozone-generating devices like e. g. fluorescent light sources, mercury-vapour lamps or electrical high-voltage appliances.
Humid storage rooms are not suitable.
Please make sure that condensation is not generated. The best relative air humidity is less than 65 %.

3.2 Transport and packaging

In order to avoid any injuries and any kind of damage always make use of proper transport and lifting equipment.

The couplings are packed differently each depending on size, number and kind of transport. Unless otherwise contractually agreed, packaging will follow the in-house packaging specifications of KTR.

KTR-Group	ROTEX® Operating/Assembly instructions	KTR-N 40210 EN Sheet: 10 of 27 Edition: 23

4 Assembly

The coupling is generally supplied in individual parts. Before assembly the coupling has to be inspected for completeness.

4.1 Components of the coupling

Components of ROTEX®, shaft coupling type No. 001

Component	Number	Description
1	2	Hub
2	1	Spider 1)
3	5 2)	DZ elements 1)
4	2	Setscrews DIN EN ISO 4029

1) Optionally spider or DZ elements
2) With size 180 the number is 6.

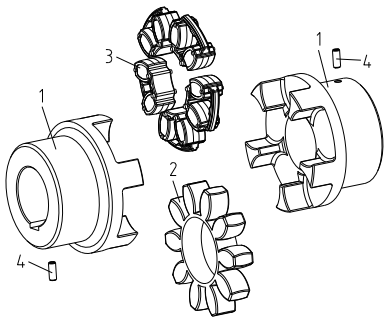

Illustration 6: ROTEX®

Components of ROTEX® type DKM 1)

Component	Number	Description
1	2	Hub
2	2	Spider
3	1	DKM spacer
4	2	Setscrews DIN EN ISO 4029

1) Type DKM not available with DZ elements.

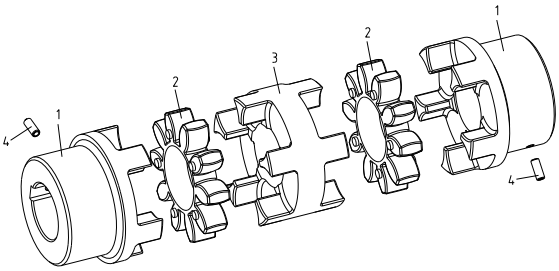

Illustration 7: ROTEX® type DKM

Components of ROTEX® type with taper clamping sleeve

Component	Number	Description
TB1/TB2	2	Hub for taper clamping sleeve
1	2	Taper clamping sleeve
2	1	Spider 1)
3	5 2)	DZ elements 1)
4	4	Setscrews DIN EN ISO 4029

1) Optionally spider or DZ elements
2) With size 180 the number is 6.

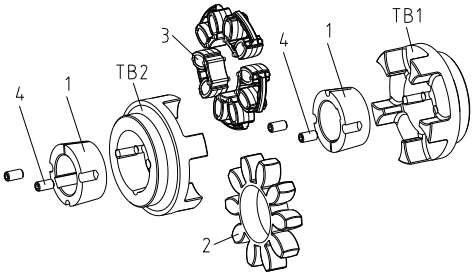

Illustration 8: ROTEX® type with taper clamping sleeve

Please observe protection note ISO 16016.	Drawn: 2019-07-02 Pz/Wb	Replacing: KTR-N dated 2017-09-06
	Verified: 2019-07-23 Pz	Replaced by:

KTR-Group	ROTEX® Operating/Assembly instructions	KTR-N 40210 EN Sheet: 11 of 27 Edition: 23

4 Assembly

4.1 Components of the coupling

Features of standard spiders

Spider hardness (Shore)	92 Shore A		98 Shore A		64 Shore D	
	T-PUR® (orange)	PUR (yellow)	T-PUR® (purple)	PUR (red)	T-PUR® (light green)	PUR (natural white [1])
Marking (colour)						

1) Natural white with green marking of teeth

4.2 Advice for finish bore

The maximum permissible bore diameters d (see chapter 1 - technical data) must not be exceeded. If these figures are disregarded, the coupling may tear. Rotating particles may cause danger to life.

- Hub bores machined by the customer have to observe concentricity or axial runout, respectively (see illustration 9).
- Make absolutely sure to observe the figures for Ø d_{max}.
- Carefully align the hubs when the finish bores are drilled.
- Provide for a setscrew according to DIN EN ISO 4029 with a cup point or an end plate to fasten the hubs axially.

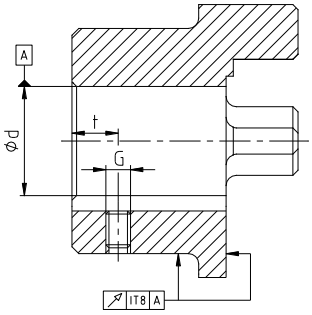

Illustration 9: Concentricity and axial run-out

The customer bears the sole responsibility for all machining processes performed subsequently on unbored or pilot bored as well as finish machined coupling components and spare parts. KTR does not assume any warranty claims resulting from insufficient remachining.

KTR supplies unbored or pilot bored coupling components and spare parts only upon explicit request of the customer. These parts are additionally marked with the symbol Ⓤ.

<u>Reference to unbored resp. pilot bored coupling components with explosion protection marking:</u>
Basically the company KTR supplies couplings resp. coupling hubs with explosion protection marking as an unbored or pilot bored type only on explicit request of the customer. The prerequisite is a declaration of exemption submitted by the customer assuming any responsibility and liability for remachining performed properly.

Table 8: Setscrew DIN EN ISO 4029

Size	14	19	24	28	38	42	48	55	65	75	90	100	110	125	140	160	180
Dimension G	M4	M5	M5	M8	M8	M8	M8	M10	M10	M10	M12	M12	M16	M16	M20	M20	M20
Dimension t	5	10	10	15	15	20	20	20	20	25	30	30	35	40	45	50	50
Tightening torque T_A [Nm]	1.5	2	2	10	10	10	10	17	17	17	40	40	80	80	140	140	140

Please observe protection note ISO 16016.	Drawn: 2019-07-02 Pz/Wb	Replacing: KTR-N dated 2017-09-06
	Verified: 2019-07-23 Pz	Replaced by:

4 Assembly

4.2 Advice for finish bore

Table 9: Recommended fit pairs acc. to DIN 748-1

Bore [mm]		Shaft tolerance	Bore tolerance
above	up to		
	50	k6	H7 (KTR standard)
50		m6	

If a feather keyway is intended to be used in the hub, it should correspond to the tolerance ISO JS9 (KTR standard) with standard operating conditions or ISO P9 with complicated operating conditions (frequently alternating torsional direction, shock loads, etc.). The keyway should preferably be located between the cams. With axial fastening via setscrew the tapped hole should be positioned on the keyway except for AI-D which should be positioned opposite the keyway.

The transmittable torque of the shaft-hub-connection must be reviewed by the customer and is subject to his responsibility.

4.3 Assembly of the hubs

☞ **We recommend to inspect bores, shaft, keyway and feather key for dimensional accuracy before assembly.**

Heating the hubs lightly (approx. 80 °C) allows for an easier mounting on the shaft.

Please pay attention to the ignition risk in potentially explosive atmospheres!

STOP **Touching the heated hubs causes burns.**
Please wear safety gloves.

With the assembly make sure that the distance dimension E (see table 1 to 7) is observed to allow for axial clearance of the spider when in operation.
Disregarding this advice may cause damage to the coupling.

If used in potentially explosive atmospheres the setscrews to fasten the hubs as well as all screw connections must be secured against working loose additionally, e. g. conglutinating with Loctite (average strength).

- Mount the hubs on the shaft of driving and driven side (see illustration 10).
- Insert the spider or DZ elements into the cam section of the hub on the driving or driven side.
- Shift the power packs in axial direction until the distance dimension E is achieved (see illustration 11).
- If the power packs are already firmly assembled, shifting the hubs axially on the shafts allows for setting the distance dimension E.
- Fasten the hubs by tightening the setscrews DIN EN ISO 4029 with a cup point (tightening torques see table 8).

☞ **If the shaft diameters with inserted feather key are smaller than dimension d_H (see table 1 to 7) of the spider, one or two shaft ends may protude into the spider.**

KTR-Group	ROTEX® Operating/Assembly instructions	KTR-N 40210 EN Sheet: 13 of 27 Edition: 23

4 Assembly

4.3 Assembly of the hubs

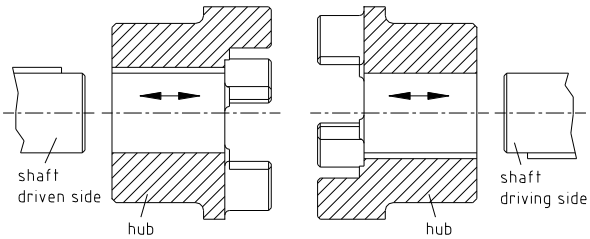

Illustration 10: Assembly of the hubs

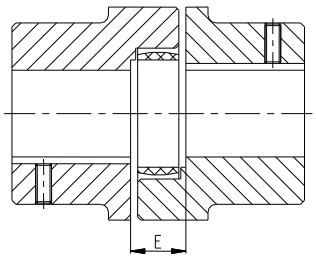

Illustration 11: Assembly of coupling

4.4 Assembly of taper clamping sleeve

Assembly of taper clamping sleeve:

Clean the contact surfaces of the taper clamping sleeves and of shaft and hub and afterwards apply thin fluid oil lightly (e. g. Ballistol Universal oil or Klüber Quietsch-Ex).
The taper clamping sleeves have got axially parallel, cylindrical and smooth tapped blind holes. Only half of these holes are located in the material of the sleeve. The other half located in the hub has got threads.
Fit the coupling element and the taper clamping sleeve into each other, make sure that the bores cover each other and tighten the setscrews lightly. Fit the coupling element along with the taper clamping sleeve on the shaft and tighten the setscrews at the tightening torque specified in table 10.
During the screwing operation the hub is mounted onto the taper sleeve and thus the sleeve is pressed onto the shaft. By light blows of the hammer the taper clamping sleeve must be pushed further into the taper bore by means of a suitable sleeve. Afterwards re-tighten the setscrews at the tightening torque specified in table 10. This process must be performed at least once.
After operation under load of the drive for a short while please inspect if the setscrews have unscrewed.
Axial fixing of the Taper Lock hub (coupling hub with taper clamping sleeve) is obtained by proper assembly only.

If used in potentially explosive atmospheres the setscrews to fasten the taper clamping sleeves have to be secured against working loose additionally, e. g. conglutinating with Loctite (average strength).
Taper clamping sleeves used without a feather key are not permitted in potentially explosive atmospheres and are thus not provided with a respective explosion protection marking.

Oils and greases with molybdenum disulphide or high-pressure additives, additives of Teflon and silicone as well as internal lubricants reducing the coefficient of friction significantly must not be used.

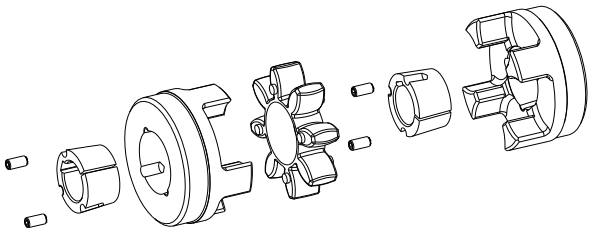

Illustration 12: ROTEX® type with taper clamping sleeve

Please observe protection note ISO 16016.	Drawn: 2019-07-02 Pz/Wb	Replacing: KTR-N dated 2017-09-06
	Verified: 2019-07-23 Pz	Replaced by:

4 Assembly

4.4 Assembly of taper clamping sleeve

Disassembly of taper clamping sleeve:

The taper clamping sleeve is released by removing the setscrews. Afterwards one of the setscrews used as forcing screw is screwed in the thread of the sleeve and tightened.
The coupling hub untightened that way can be manually removed from the shaft with the taper clamping sleeve.

Table 10:

Taper clamping sleeve	Screw dimensions				Number
	G [inch]	L [inch]	SW [mm]	T_A [Nm]	
1008	1/4	1/2	3	5.7	2
1108	1/4	1/2	3	5.7	2
1610	3/8	5/8	5	20	2
1615	3/8	5/8	5	20	2
2012	7/16	7/8	6	31	2
2517	1/2	7/8	6	49	2
3020	5/8	1 1/4	8	92	2
3535	1/2	1 1/2	10	115	3
4545	3/4	1 3/4	12	170	3

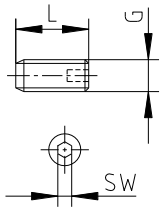

Illustration 13: Withworth setscrew (BSW)

4.5 Displacements - alignment of the couplings

The displacement figures specified in tables 11 to 13 provide for sufficient safety to compensate for external influences like, for example, heat expansion or foundation settling.

In order to ensure a long service life of the coupling and avoid risks with the use in potentially explosive atmospheres, the shaft ends must be accurately aligned.
Please absolutely observe the displacement figures indicated (see table 11 to 13). If the figures are exceeded, the coupling will be damaged.
The more accurate the alignment of the coupling, the longer is its service life.
If used in potentially explosive atmospheres for explosion group IIC, only half of the displacement figures (see table 11 to 13) are permissible.

Please note:

- The displacement figures specified in table 11 to 13 are maximum figures which must not arise in parallel. If radial and angular displacements arise at the same time, the permissible displacement values may only be used proportionally (see illustration 15).
- Please inspect with a dial gauge, ruler or feeler whether the permissible displacement figures of tables 11 to 13 can be observed.

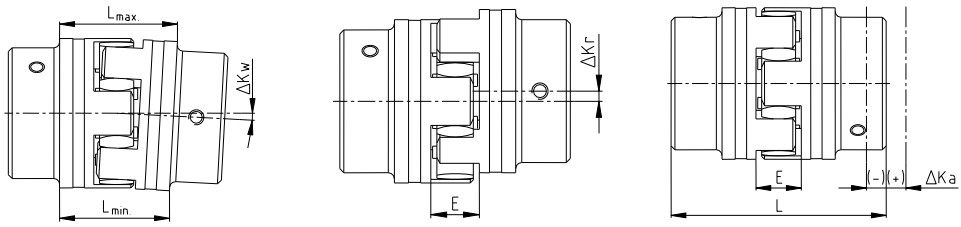

Angular displacements | Radial displacements | Axial displacements

$\Delta K_w = L_{1max.} - L_{1min.}$ [mm]

$L_{max} = L + \Delta K_a$ [mm]

Illustration 14: Displacements

KTR-Group	ROTEX® Operating/Assembly instructions	KTR-N 40210 EN Sheet: 15 of 27 Edition: 23

4 Assembly

4.5 Displacements - alignment of the couplings

Examples of the displacement combinations specified in illustration 15:

Example 1:
ΔK_r = 30 %
ΔK_w = 70 %

Example 2:
ΔK_r = 60 %
ΔK_w = 40 %

$$\Delta K_{total} = \Delta K_r + \Delta K_w \leq 100\ \%$$

Illustration 15: Combinations of displacement

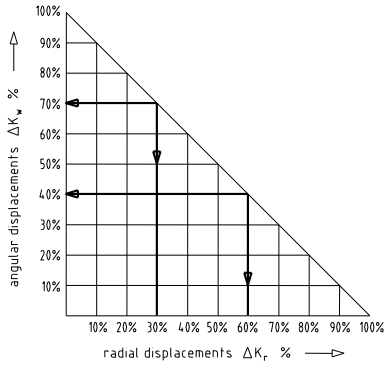

Table 11: Displacement figures for 92 and 98 Shore A

Size		14	19	24	28	38	42	48	55	65	75	90	100	110	125	140	160	180
Max. axial displacement ΔK_a [mm]		-0.5	-0.5	-0.5	-0.7	-0.7	-1.0	-1.0	-1.0	-1.0	-1.5	-1.5	-1.5	-2.0	-2.0	-2.0	-2.5	-3.0
		+1.0	+1.2	+1.4	+1.5	+1.8	+2.0	+2.1	+2.2	+2.6	+3.0	+3.4	+3.8	+4.2	+4.6	+5.0	+5.7	+6.4
Max. radial displacement ΔK_r [mm] with	1500 rpm	0.17	0.20	0.22	0.25	0.28	0.32	0.36	0.38	0.42	0.48	0.50	0.52	0.55	0.60	0.62	0.64	0.68
	3000 rpm	0.11	0.13	0.15	0.17	0.19	0.21	0.25	0.26	0.28	0.32	0.34	0.36	0.38	-	-	-	-
ΔK_w [degree] max. angular displacement with n=1500 rpm		1.2	1.2	0.9	0.9	1.0	1.0	1.1	1.1	1.2	1.2	1.2	1.2	1.3	1.3	1.2	1.2	1.2
ΔK_w [mm]		0.67	0.82	0.85	1.05	1.35	1.70	2.00	2.30	2.70	3.30	4.30	4.80	5.60	6.50	6.60	7.60	9.00
ΔK_w [degree] max. angular displacement with n=3000 rpm		1.1	1.1	0.8	0.8	0.9	0.9	1.0	1.0	1.1	1.1	1.1	1.1	1.2	-	-	-	-
ΔK_w [mm]		0.60	0.70	0.75	0.85	1.10	1.40	1.60	2.00	2.30	2.90	3.80	4.20	5.00	-	-	-	-

Table 12: Displacement figures for 64 Shore D

Size		14	19	24	28	38	42	48	55	65	75	90	100	110	125	140	160	180
Max. axial displacement ΔK_a [mm]		-0.5	-0.5	-0.5	-0.7	-0.7	-1.0	-1.0	-1.0	-1.0	-1.5	-1.5	-1.5	-2.0	-2.0	-2.0	-2.5	-3.0
		+1.0	+1.2	+1.4	+1.5	+1.8	+2.0	+2.1	+2.2	+2.6	+3.0	+3.4	+3.8	+4.2	+4.6	+5.0	+5.7	+6.4
Max. radial displacement ΔK_r [mm] with	1500 rpm	0.11	0.13	0.15	0.18	0.21	0.23	0.25	0.27	0.30	0.34	0.36	0.37	0.40	0.43	0.45	0.46	0.49
	3000 rpm	0.08	0.09	0.10	0.13	0.15	0.16	0.18	0.19	0.21	0.24	0.25	0.26	0.28	-	-	-	-
ΔK_w [degree] max. angular displacement with n=1500 rpm		1.1	1.1	0.8	0.8	0.9	0.9	1.0	1.0	1.1	1.1	1.1	1.1	1.2	1.2	1.1	1.1	1.1
ΔK_w [mm]		0.57	0.77	0.77	0.90	1.25	1.40	1.80	2.00	2.50	3.00	3.80	4.30	5.30	6.00	6.10	7.10	8.00
ΔK_w [degree] max. angular displacement with n=3000 rpm		1.0	1.0	0.7	0.7	0.8	0.8	0.9	0.9	1.0	1.0	1.0	1.0	1.1	-	-	-	-
ΔK_w [mm]		0.52	0.70	0.67	0.80	1.00	1.30	1.60	1.80	2.20	2.70	3.50	4.00	4.90	-	-	-	-

Table 13: Displacement figures for type DKM only

Size		19	24	28	38	42	48	55	65	75	90
Max. axial displacement ΔK_a [mm]		+1.2	+1.4	+1.5	+1.8	+2.0	+2.1	+2.2	+2.6	+3.0	+3.4
		-1.0	-1.0	-1.4	-1.4	-2.0	-2.0	-2.0	-2.0	-3.0	-3.0
Max. radial displacement ΔK_r [mm] with n =	1500 rpm	0.45	0.59	0.66	0.77	0.84	0.91	1.01	1.17	1.33	1.48
	3000 rpm	0.40	0.53	0.60	0.70	0.75	0.82	0.81	1.05	1.19	1.33
ΔK_w [degree] max. angular displacement with n =	1500 rpm	1.0	1.0	1.0	1.0	1.0	1.0	1.0	1.0	1.0	1.0
	3000 rpm	0.9	0.9	0.9	0.9	0.9	0.9	0.9	0.9	0.9	0.9

Please observe protection note ISO 16016.	Drawn: 2019-07-02 Pz/Wb	Replacing: KTR-N dated 2017-09-06
	Verified: 2019-07-23 Pz	Replaced by:

5 Start-up

Before start-up of the coupling, inspect the tightening of setscrews in the hubs, the alignment and the distance dimension E and adjust, if necessary, and also inspect all screw connections for the tightening torques specified.

If used in potentially explosive atmospheres the setscrews to fasten the hubs as well as all screw connections must be secured against working loose additionally, e. g. conglutinating with Loctite (average strength).

Finally the coupling protection against accidental contact must be fitted. It is required in accordance with DIN EN ISO 12100 (Safety of Machinery) and directive 2014/34/EU and must protect against

- access with the little finger
- falling down of solid foreign objects.

The cover may provide for openings intended for necessary heat dissipation. These openings have to comply with DIN EN ISO 13857.
The cover must be electrically conductive and included in the equipotential bonding. Bellhousings (magnesium share below 7.5 %) made of aluminium and damping rings (NBR) can be used as connecting element between pump and electric motor. The cover may only be taken off with standstill of the unit.

If the couplings are used in locations subject to dust explosion and in mining the user must make sure that there is no accumulation of dust in a dangerous volume between the cover and the coupling. The coupling must not operate in an accumulation of dust.

For covers with unlocked openings on the top face no light metals must be used if the couplings are used as equipment of equipment group II (if possible, made of stainless steel).
If the couplings are used in mining (equipment group I M2), the cover must not be made of light metal. In addition, it must be resistant to higher mechanical loads than with use as equipment of equipment group II.

During operation of the coupling, please pay attention to

- different operating noise
- vibrations occurring.

If you note any irregularities with the coupling during operation, the drive unit must be switched off immediately. The cause of the breakdown must be specified by means of the table „Breakdowns“ and, if possible, be eliminated according to the proposals. The potential breakdowns specified can be hints only. To find out the cause all operating factors and machine components must be considered.

Coating of coupling:

If coated (priming, paintings, etc.) couplings are used in potentially explosive atmospheres, the requirements on conductibility and coating thickness must be considered. With paintings up to 200 µm electrostatic load does not have to be expected. Paintings and coatings exceeding a thickness of 200 µm are generally impermissible for potentially explosive atmospheres. This also applies for multiple coatings exceeding an overall thickness of 200 µm. Make sure with painting or coating that the coupling components are conductively connected with the device/devices to be connected so that the equipotential bonding is not impeded by the paint or coat applied. In addition, make sure that the marking of the coupling remains legible. Painting or coating of the spider is generally not admitted.

KTR-Group	ROTEX® Operating/Assembly instructions	KTR-N 40210 EN Sheet: 17 of 27 Edition: 23

6 Breakdowns, causes and elimination

The below-mentioned failures can lead to a use of the **ROTEX®** coupling other than intended. In addition to the specifications given in these operating/assembly instructions make sure to avoid such failures.
The errors listed can only be clues to search for the failures. When searching for the failure the adjacent components must generally be considered.

If used other than intended the coupling can become a source of ignition.
EU directive 2014/34/EU requires special care by the manufacturer and the user.

General failures with use other than intended:

- Important data for the coupling selection are not forwarded.
- The calculation of the shaft-hub-connection is not considered.
- Coupling components with damage occurred during transport are assembled.
- If the heated hubs are assembled, the permissible temperature is exceeded.
- The clearance of the components to be assembled is not coordinated with one another.
- Tightening torques have been fallen below/exceeded.
- Components are mixed up by mistake/assembled incorrectly.
- A wrong or no spider/DZ elements are inserted in the coupling.
- No original **KTR** components (purchased parts) are used.
- Old/ spiders/DZ elements already worn off or spiders/DZ elements stored for too long are used.
- Maintenance intervals are not observed.

Breakdowns	Causes	Hazard notes for potentially explosive atmospheres	Elimination
Different operating noise and/or vibrations occuring	Misalignment	Increased temperature on the spider surface; ignition risk by hot surfaces	1) Set the unit out of operation 2) Eliminate the reason for the misalignment (e. g. loose foundation bolts, breaking of the engine mount, heat expansion of unit components, modification of the installation dimension E of the coupling) 3) For inspection of wear see chapter 10.2
	Wear of spider, short-term torque transmission due to metal contact	Ignition risk due to sparking	1) Set the unit out of operation 2) Disassemble the coupling and remove residues of the spider 3) Inspect coupling components and replace coupling components that have been damaged 4) Insert spider, assemble coupling components 5) Inspect alignment, adjust if necessary
	Screws for axial fastening of hubs working loose	Ignition risk due to hot surfaces and sparking	1) Set the unit out of operation 2) Inspect alignment of coupling 3) Tighten the screws to fasten the hubs and secure against working loose 4) For inspection of wear see chapter 10.2
Breaking of cams	Wear of spider, torque transmission due to metal contact	Ignition risk due to sparking	1) Set the unit out of operation 2) Replace complete coupling 3) Inspect alignment
	Breaking of the cams due to high impact energy/overload		1) Set the unit out of operation 2) Replace complete coupling 3) Inspect alignment 4) Find out the reason for overload

Please observe protection note ISO 16016.	Drawn: 2019-07-02 Pz/Wb	Replacing: KTR-N dated 2017-09-06
	Verified: 2019-07-23 Pz	Replaced by:

6 Breakdowns, causes and elimination

Breakdowns	Causes	Hazard notes for potentially explosive atmospheres	Elimination
Breaking of cams	Operating parameters do not meet with the performance of the coupling	Ignition risk due to sparking	1) Set the unit out of operation 2) Review the operating parameters and select a bigger coupling (consider mounting space) 3) Assemble new coupling size 4) Inspect alignment
	Operating error of the unit		1) Set the unit out of operation 2) Replace complete coupling 3) Inspect alignment 4) Instruct and train the service staff
Early wear of spider	Misalignment	Increased temperature on the spider surface; ignition risk by hot surfaces	1) Set the unit out of operation 2) Eliminate the reason for the misalignment (e. g. loose foundation bolts, breaking of the engine mount, heat expansion of unit components, modification of the installation dimension E of the coupling) 3) For inspection of wear see chapter 10.2
	e. g. contact with aggressive liquids/oils, ozone influence, too high/low ambient temperatures etc. causing physical modification of the spider	Ignition risk due to sparking with metallic contact of the cams	1) Set the unit out of operation 2) Disassemble the coupling and remove residues of the spider 3) Inspect coupling components and replace coupling components that have been damaged 4) Insert spider, assemble coupling components 5) Inspect alignment, adjust if necessary 6) Make sure that further physical modifications of the spider are excluded
	Ambient/contact temperatures which are too high for the spider, max. permissible -30 ℃/+90 ℃		1) Set the unit out of operation 2) Disassemble the coupling and remove residues of the spider 3) Inspect coupling components and replace coupling components that have been damaged 4) Insert spider, assemble coupling components 5) Inspect alignment, adjust if necessary 6) Inspect and adjust ambient/contact temperature (correct by using other spider materials, if necessary)
Early wear of spider (liquefaction of material inside the spider cam)	Vibrations of drive		1) Set the unit out of operation 2) Disassemble the coupling and remove residues of the spider 3) Inspect coupling components and replace coupling components that have been damaged 4) Insert spider, assemble coupling components 5) Inspect alignment, adjust if necessary 6) Find out the reason for the vibrations (correct by spider with lower or higher Shore hardness, if necessary)

When operating with a worn spider (see chapter 10.3) proper operation is not ensured.

7 Disposal

In respect of environmental protection we would ask you to dispose of the packaging resp. products on termination of their service life in accordance with the legal regulations and standards that apply.

- **Metal**
  Any metal components have to be cleaned and disposed of by scrap metal.
- **Nylon materials**
  Nylon materials have to be collected and disposed of by a waste disposal company.

8 Maintenance and service

ROTEX® is a low-maintenance coupling. We recommend to perform a visual inspection on the coupling **at least once a year**. Please pay special attention to the condition of the coupling spiders.

- Since the flexible machine bearings of the driving and driven side settle during the course of load, inspect the alignment of the coupling and re-align the coupling, if necessary.
- The coupling components have to be inspected for damages.
- The screw connections have to be visually inspected.

Having started up the coupling the tightening torques of the screws have to be inspected during the usual inspection intervals.

With the use in potentially explosive atmospheres observe chapter 10.2 "Inspection intervals for couplings in Ex potentially explosive atmospheres".

9 Spares inventory, customer service addresses

We recommend to store major spare parts on site to ensure the readiness for use of the machine in case if a coupling fails.

Contact addresses of the KTR partners for spare parts and orders can be obtained from the KTR homepage at www.ktr.com.

KTR does not assume any liability or warranty for the use of spare parts and accessories which are not provided by KTR and for the damages which may incur as a result.

10 Enclosure A

Advice and instructions regarding the use in Ex potentially explosive atmospheres

Applicable hub designs/types:

a) Hubs that may be used in group II, category 2 and 3 :
(hubs with feather keyway and hubs with CLAMPEX® clamping set or clamping ring hubs)

- 1.0 Hub with feather keyway and setscrew
- 1.3 Hub with spline
- 1.4 Hub with feather keyway, without setscrew
- 2.1 Clamping hub single slot with feather keyway
- 2.3 Clamping hub single slot with spline
- 2.6 Clamping hub double slot with feather keyway
- 4.0 Hub with CLAMPEX® clamping set KTR 150
- 4.1 Hub with CLAMPEX® clamping set KTR 200
- 4.2 Hub with CLAMPEX® clamping set KTR 250
- 4.3 Hub with CLAMPEX® clamping set KTR 400
- 4.4 Hub with CLAMPEX® clamping set KTR 401
- 6.0 Clamping ring hub
- 6.5 Clamping ring hub (hub type as 6.0, but external clamping screws only)
- 7.6 Half shell hub (DH) with feather keyway
- 7.9 Half shell hub (H) with feather keyway
- Type standard, AFN, BFN, CF, CFN, DF, DFN, DKM, ZS-DKM, ZS-DKM-H, SP and TB with hubs corresponding to the specifications above

b) Hubs which may be used in group II, category 3 only: hubs without feather keyway

- 2.0 Clamping hub single slot without feather keyway
- 2.5 Clamping hub double slot without feather keyway
- 2.8 Clamping hub with axial slot without feather keyway
- 7.5 Half shell hub (DH) without feather keyway
- 7.8 Half shell hub (H) without feather keyway
- Type standard, AFN, BFN, CF, CFN, DKM, ZS-DKM, ZS-DKM-H and SP with hubs corresponding to the specifications above

ROTEX® DKM and ROTEX® ZS-DKM only with spacer made of steel or aluminium semi-finished products with a yield point of $R_{p0.2} \geq 250$ N/mm^2.

Ex **Hubs, clamping hubs or similar types without feather keyways may be used in category 3 only and are marked with category 3 accordingly.**
The hubs types 1.1 and 1.2 are not approved for potentially explosive atmospheres!

KTR-Group	ROTEX® Operating/Assembly instructions	KTR-N 40210 EN Sheet: 21 of 27 Edition: 23

10 Enclosure A

Advice and instructions regarding the use in Ex potentially explosive atmospheres

10.1 Intended use in Ex potentially explosive atmospheres

Conditions of operation in Ex potentially explosive atmospheres

ROTEX® couplings are suitable for the use according to EU directive 2014/34/EU.

1. Industry (with the exception of mining)

- Equipment group II of category 2 and 3 (coupling is not approved/not suitable for equipment group 1)
- Substance group G (gases, fogs, vapours), zone 1 and 2 (coupling is not approved/not suitable for zone 0)
- Substance group D (dusts), zone 21 and 22 (coupling is not approved/not suitable for zone 20)
- Explosion group IIC (gases, fogs, vapours) (explosion group IIA and IIB are included in IIC) and explosion group IIIC (dusts) (explosion group IIIA and IIIB are included in IIIC)

Temperature class:

Temperature class	PUR / T-PUR®	
	Ambient or operating temperature T_a 1)	Max. surface temperature 2)
T4	-30 °C to +90 °C	+110 °C
T5	-30 °C to +75 °C	+95 °C
T6	-30 °C to +60 °C	+80 °C

Explanation:
The maximum surface temperatures each result from the maximum permissible ambient or operating temperature T_a plus the maximum temperature increase ΔT of 20 K to be considered. For the temperature class a safety margin subject to standard of 5 K is added.
1) The ambient or operating temperature T_a is limited to +90 °C due to the permissible permanent opera ting temperature of the elastomers used.
2) The maximum surface temperature of +110 °C applies for the us e in locations which are potentially subject to dust explosion.

In potentially explosive atmospheres
- the ignition temperature of dusts generated must at least be 1.5 times the surface temperature to be considered
- the glow temperature must at least be the surface temperature to be considered plus a safety distance of 75 K.
- the gases and vapours generated must amount to the temperature class specified.

2. Mining

Equipment group I of category M2 (coupling is not approved/not suitable for equipment group M1).
Permissible ambient temperature -30 °C to +90 °C.

Please observe protection note ISO 16016.	Drawn: 2019-07-02 Pz/Wb	Replacing: KTR-N dated 2017-09-06
	Verified: 2019-07-23 Pz	Replaced by:

10 Enclosure A

Advice and instructions regarding the use in Ex potentially explosive atmospheres

10.2 Inspection intervals for couplings in Ex potentially explosive atmospheres

Equipment category	Inspection intervals
3G 3D	For couplings operated in zone 2 or zone 22 the inspection and maintenance intervals of the usual operating/assembly instructions for standard operation apply. During the standard operation which has to be taken as a basis of the ignition risk analysis the couplings are free from any ignition source. For gases, vapours and dusts generated the permissible glow and ignition temperatures specified in chapter 10.1 have to be considered and observed.
M2 2G 2D No gases and vapours of explosion group IIC	An inspection of the torsional backlash and a visual inspection of the flexible spider/DZ elements must be performed after 3,000 operating hours for the first time, at the latest after 6 months after start-up of the coupling. If you note insignificant or no wear on the spider/DZ elements upon this initial inspection, further inspections can each be performed after 6,000 operating hours or at the latest after 18 months, provided that the operating parameters remain the same. If you note significant wear during the initial inspection so that it would be recommendable to replace the spider/DZ elements, find out the cause according to the table „Breakdowns“, if possible. The maintenance intervals must be adjusted to the modified operating parameters without fail.
M2 2G 2D Gases and vapours of explosion group IIC	An inspection of the torsional backlash and a visual inspection of the flexible spider/DZ elements must be performed after 2,000 operating hours for the first time, at the latest after 3 months after start-up of the coupling. If you note insignificant or no wear on the spider/DZ elements upon this initial inspection, further inspections can each be performed after 4,000 operating hours or at the latest after 12 months, provided that the operating parameters remain the same. If you note significant wear during the initial inspection so that it would be recommendable to replace the spider/DZ elements, find out the cause according to the table „Breakdowns“, if possible. The maintenance intervals must be adjusted to the modified operating parameters without fail.

Ex **Hubs, clamping hubs or similar types without feather keyways may be used in category 3 only and are marked with category 3 accordingly.**

KTR-Group	ROTEX® Operating/Assembly instructions	KTR-N 40210 EN Sheet: 23 of 27 Edition: 23

10 Enclosure A

Advice and instructions regarding the use in Ex potentially explosive atmospheres

10.2 Inspection intervals for couplings in Ex potentially explosive atmospheres

ROTEX® coupling

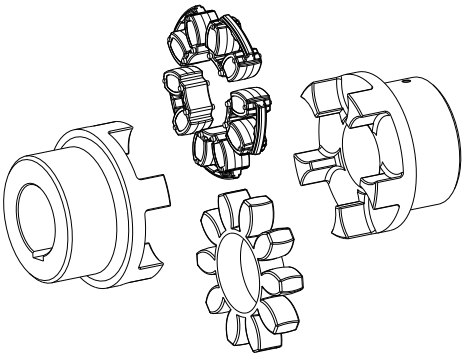

Illustration 16: ROTEX® coupling

Illustration 17.1: ROTEX® DZ elements

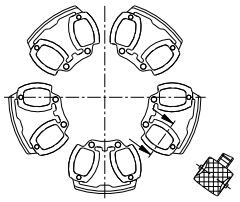

Illustration 17.2: ROTEX® spider

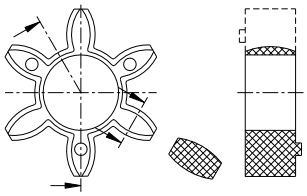

Here the backlash between the cams of the coupling and the flexible spider/DZ element must be inspected by means of a feeler gauge.
When reaching the wear limit **maximum wear**, the spider/DZ element must be replaced immediately, irrespective of the inspection intervals.

Please observe protection note ISO 16016.	Drawn: 2019-07-02 Pz/Wb	Replacing: KTR-N dated 2017-09-06
	Verified: 2019-07-23 Pz	Replaced by:

10 Enclosure A

Advice and instructions regarding the use in Ex potentially explosive atmospheres

10.3 Standard values of wear

In case of backlash > X mm, the flexible spider/DZ elements must be replaced.

The general condition of the coupling can both be monitored at standstill and during operation. If the coupling is tested during operation, the operator must ensure an appropriate and proven test procedure (e. g. stroboscopic lamp, high-speed camera, etc.) which is definitely comparable to testing at standstill. Should any distinctive features arise, testing must be performed with the machine at standstill.

Reaching the limits for replacing depends on the operating conditions and the existing operating parameters.

In order to ensure a long service life of the coupling and avoid risks with the use in potentially explosive atmospheres, the shaft ends must be accurately aligned.
Please absolutely observe the displacement figures indicated (see table 11 to 13). If the figures are exceeded, the coupling will be damaged.

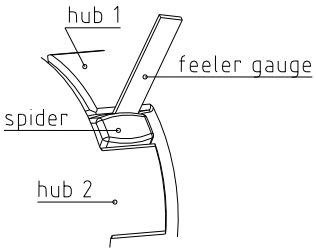

Illustration 18: Inspection of the limit of wear

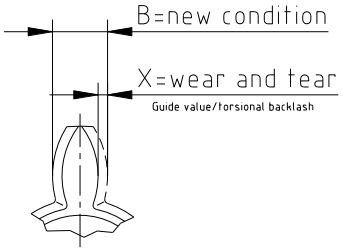

Illustration 19: Wear of spider

Table 14:

Size	Limits of wear (friction) $X_{max.}$ [mm]	Size	Limits of wear (friction) $X_{max.}$ [mm]
9	2	65	5
14	2	75	6
19	3	90	8
24	3	100	9
28	3	110	9
38	3	125	10
42	4	140	12
48	4	160	14
55	5	180	14

KTR-Group	ROTEX® Operating/Assembly instructions	KTR-N 40210 EN Sheet: 25 of 27 Edition: 23

10 Enclosure A

Advice and instructions regarding the use in Ex potentially explosive atmospheres

10.4 Ex marking of coupling for potentially explosive atmospheres

The ATEX marking of the ROTEX® coupling is applied on the outer sheath or on the front side.
The flexible spider resp. DZ element is not marked.

For the complete marking refer to the operating/assembly instructions and/or the delivery note/package.

The following marking applies for the products:

- Hubs resp. spacer **without aluminium**
  Category 2 (hubs resp. clamping hubs with feather keyway)

  ROTEX®
  <Year>

  Ex CE
  I M2 Ex h I Mb
  II 2G Ex h IIC T6 … T4 Gb
  II 2D Ex h IIIC T80 °C … T110 °C Db
  -30 °C ≤ T_a ≤ +60 °C … +90 °C
  KTR Systems GmbH, Carl-Zeiss-Straße 25, D-48432 Rheine

- Hubs resp. spacer **without aluminium**
  Category 3 (hubs resp. clamping hubs without feather keyway)

  ROTEX®
  <Year>

  Ex CE
  I M2 Ex h I Mb
  II 3G Ex h IIC T6 … T4 Gc
  II 3D Ex h IIIC T80 °C … T110 °C Dc
  -30 °C ≤ T_a ≤ +60 °C … +90 °C
  KTR Systems GmbH, Carl-Zeiss-Straße 25, D-48432 Rheine

- Hubs resp. spacer **made of aluminium only**
  Category 2 (hubs resp. clamping hubs with feather keyway)

  ROTEX®
  <Year>

  Ex CE
  II 2G Ex h IIC T6 … T4 Gb
  II 2D Ex h IIIC T80 °C … T110 °C Db
  -30 °C ≤ T_a ≤ +60 °C … +90 °C
  KTR Systems GmbH, Carl-Zeiss-Straße 25, D-48432 Rheine

- Hubs resp. spacer **made of aluminium only**
  Category 3 (hubs resp. clamping hubs without feather keyway)

  ROTEX®
  <Year>

  Ex CE
  II 3G Ex h IIC T6 … T4 Gc
  II 3D Ex h IIIC T80 °C … T110 °C Dc
  -30 °C ≤ T_a ≤ +60 °C … +90 °C
  KTR Systems GmbH, Carl-Zeiss-Straße 25, D-48432 Rheine

Short marking:
(A short marking is only made if there is no other option for reason of space or functioning.)

ROTEX®
<Year>

Ex CE KTR

Please observe protection note ISO 16016.	Drawn: 2019-07-02 Pz/Wb	Replacing: KTR-N dated 2017-09-06
	Verified: 2019-07-23 Pz	Replaced by:

10 Enclosure A

Advice and instructions regarding the use in Ex potentially explosive atmospheres

10.4 Ex marking of coupling for potentially explosive atmospheres

Deviating marking applies until 31st October 2019:

Short marking: CE Ex II 2GD c IIC T X/I M2 c X

Complete marking:
(valid for T-PUR® only) CE Ex II 2G c IIC T6, T5, T4 resp. T3 -50 °C ≤ T_a ≤ +65 °C, +80 °C, +115 °C resp. +120 °C
II 2D c T 140 °C/I M2 c -50 °C ≤ T_a ≤ +120 °C

Complete marking:
(valid for PUR only) CE Ex II 2G c IIC T6, T5 resp. T4 -30 °C ≤ T_a ≤ +65 °C, +80 °C resp. +90 °C
II 2D c T 110 °C/I M2 c -30 °C ≤ T_a ≤ +90 °C

Substance group - gases, fogs and vapours:
The marking with explosion group IIC includes explosion groups IIA and IIB.

Substance group - dusts:
The marking with explosion group IIIC includes explosion groups IIIA and IIIB.

If the symbol was punched in addition to marking , the coupling component was supplied by KTR as an unbored or pilot bored version (see chapter 4.2 of the present operating/assembly instructions).

KTR-Group	ROTEX® Operating/Assembly instructions	KTR-N 40210 EN Sheet: 27 of 27 Edition: 23

10 Enclosure A

Advice and instructions regarding the use in Ex potentially explosive atmospheres

10.5 EU Certificate of conformity

EU Certificate of conformity

corresponding to EU directive 2014/34/EU dated 26 February 2014
and to the legal regulations

The manufacturer - KTR Systems GmbH, D-48432 Rheine - states that the

flexible ROTEX® couplings

in an explosion-proof design described in the present operating/assembly instructions are devices corresponding to article 2, 1. of directive 2014/34/EU and comply with the general safety and health requirements according to enclosure II of directive 2014/34/EU.

The coupling described in here complies with the specifications of the following standards/rules:

DIN EN ISO 80079-36
DIN EN ISO 80079-37
DIN EN ISO 80079-38
IEC/TS 60079-32-1

The ROTEX® is in accordance with the specifications of directive 2014/34/EU.

According to article 13 (1) b) ii) of directive 2014/34/EU the technical documentation is deposited with the notified body (type examination certificate IBExU13ATEXB016 X):

IBExU
Institut für Sicherheitstechnik GmbH
Identification number: 0637
Fuchsmühlenweg 7

09599 Freiberg

Rheine, Place	2019-07-02 Date	i. V. Reinhard Wibbeling Engineering/R&D	i. V. Michael Brüning Product Manager

Please observe protection note ISO 16016.	Drawn:	2019-07-02 Pz/Wb	Replacing:	KTR-N dated 2017-09-06
	Verified:	2019-07-23 Pz	Replaced by:	

A.3.2.2 Declaration of Conformity

KTR-Group	ROTEX® Operating/Assembly instructions	KTR-N 40210 EN Sheet: 22 of 22 Edition: 21

10 Enclosure A

Advice and instructions regarding the use in Ex hazardous locations

10.6 EU Certificate of conformity

EU Certificate of conformity

corresponding to EU directive 2014/34/EU dated 26 February 2014
and to the legal regulations

The manufacturer - KTR Systems GmbH, D-48432 Rheine - states that the

flexible ROTEX® couplings

in an explosion-proof design described in these operating/assembly instructions are devices corresponding to article 2, 1. of directive 2014/34/EU and comply with the general safety and health requirements according to enclosure II of directive 2014/34/EU.

The coupling described in here complies with the specifications of the following standards/guidelines:

DIN EN 1127-1
DIN EN 1127-2
DIN EN 13463-1
DIN EN 13463-5
CLC/TR 50404

The ROTEX® is in accordance with the specifications of the directive 2014/34/EU. One or several directives mentioned in the corresponding type examination certificate IBExU13ATEXB016 X were in part replaced by updated versions.
KTR Systems GmbH being the manufacturer confirms that the product mentioned above is in accordance with the specifications of the new directives, too.

According to article 13 (1) b) ii) of directive 2014/34/EU the technical documentation is deposited with the institution:

IBExU
Institut für Sicherheitstechnik GmbH
Fuchsmühlenweg 7

09599 Freiberg

Rheine, Place	2017-01-02 Date	i. V. Reinhard Wibbeling Engineering/R&D	i. V. Michael Brüning Product Manager

Please observe protection note ISO 16016.	Drawn:	2017-01-02 Shg/Bru	Replacing:	KTR-N dated 2016-04-20
	Verified:	2017-01-02 Shg	Replaced by:	

D.0030410002

Operating/Assembly instructions: KTR-N 41010 EN

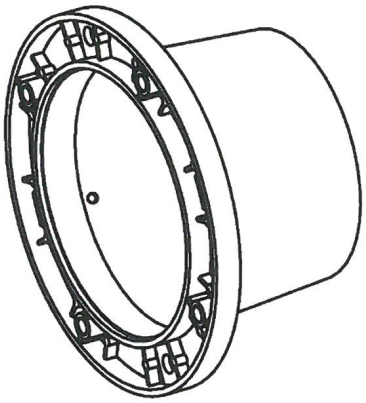

Bellhousing

88030410002-07
Englisch
2019-03-21

KRACHT

KTR-Group	Bellhousing Operating/Assembly instructions	KTR-N 41010 EN Sheet: 1 of 6 Edition: 7

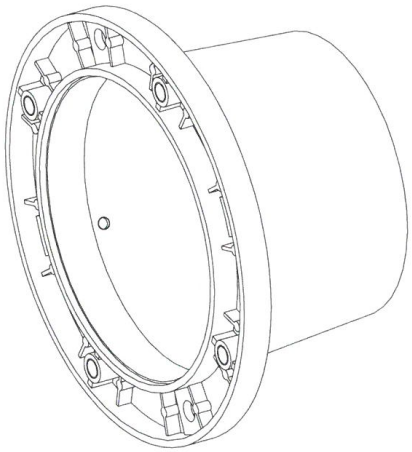

The **bellhousing** is a connecting element between electric motor and hydraulic pump. The bellhousings are made of the materials aluminium, cast iron, nylon and steel.

Table of contents

1 Advice **2**
- 1.1 General advice 2
- 1.2 Safety and advice symbols 2
- 1.3 General hazard warnings 2
- 1.4 Intended use 2

2 Storage, transport and packaging **3**
- 2.1 Storage 3
- 2.2 Transport and packaging 3

3 Assembly **3**
- 3.1 Components of bellhousing 3
- 3.2 Assembly of bellhousing 4

4 Disposal **6**

5 Spares inventory, customer service addresses **6**

Please observe protection note ISO 16016.	Drawn: 2018-03-23 Kb/Ha	Replacing: KTR-N dated 2017-03-29
	Verified: 2018-03-23 Kb	Replaced by:

KTR-Group	Bellhousing Operating/Assembly instructions	KTR-N 41010 EN Sheet: 2 of 6 Edition: 7

1 Advice

1.1 General advice

Please read through these operating/assembly instructions carefully before you start up the bellhousing.
Please pay special attention to the safety instructions!
The operating/assembly instructions are part of your product. Please store them carefully and close to the bellhousing.
The copyright for these operating/assembly instructions remains with KTR.

1.2 Safety and advice symbols

STOP	**Warning of personal injury**	This symbol indicates notes which may contribute to preventing bodily injuries or serious bodily injuries that may result in death.
!	**Warning of product damages**	This symbol indicates notes which may contribute to preventing material or machine damage.
☞	**General advice**	This symbol indicates notes which may contribute to preventing adverse results or conditions.

1.3 General hazard warnings

STOP **With assembly and disassembly of the bellhousing it has to be made sure that the entire drive train is secured against accidental switch-on. You may be seriously hurt by rotating parts. Please make absolutely sure to read through and observe the following safety indications.**

- All operations on and with the bellhousing have to be performed taking into account "safety first".
- Please make sure to switch off the power pack before you perform your work on the bellhousing.
- Secure the power pack against accidental switch-on, e. g. by providing warning signs at the place of switch-on or removing the fuse for current supply.
- Do not reach into the operation area of the machine as long as it is in operation.
- Please secure the rotating drive components against accidental contact. Please provide for the necessary protection devices and covers.

1.4 Intended use

You may only assemble and disassemble the bellhousing if you

- have carefully read through the operating/assembly instructions and understood them
- had technical training
- are authorized by your company

The bellhousing may only be used in accordance with the technical data (see catalogue of hydraulic components). Unauthorized modifications on the bellhousing are not admissible. We will not assume liability for any damage that may arise. In the interest of further development we reserve the right for technical modifications. The **bellhousing** described in here corresponds to the technical status at the time of printing of these operating/assembly instructions.

Please observe protection note ISO 16016.	Drawn:	2018-03-23 Kb/Ha	Replacing:	KTR-N dated 2017-03-29
	Verified:	2018-03-23 Kb	Replaced by:	

KTR-Group	Bellhousing Operating/Assembly instructions	KTR-N 41010 EN Sheet: 3 of 6 Edition: 7

2 Storage, transport and packaging

2.1 Storage

The bellhousings (except for those made of the material aluminium) are supplied in preserved condition and can be stored in a roofed, dry place during 6 - 9 months.

The storage rooms must not include any ozone-generating devices like e. g. fluorescent light sources, mercury-vapour lamps or electrical high-voltage appliances.
Humid storage rooms are not suitable.
Please make sure that condensation is not generated. The best relative air humidity is less than 65 %.

2.2 Transport and packaging

In order to avoid any injuries and any kind of damage please always make use of proper transport and lifting equipment.

The bellhousings are packed differently each depending on size, quantity and kind of transport. Unless otherwise contractually agreed, packaging will follow the in-house packaging specifications of KTR.

3 Assembly

The bellhousing is supplied ready for assembly.

3.1 Components of bellhousing

Component	Quantity	Description
1	1	bellhousings made of aluminium, cast iron or steel
2	1	bellhousings made of nylon with pump mounting flange made of aluminium

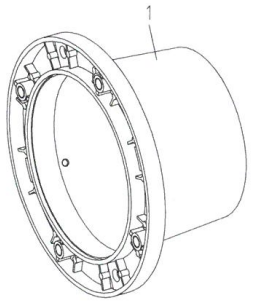

Illustration 1: Bellhousing

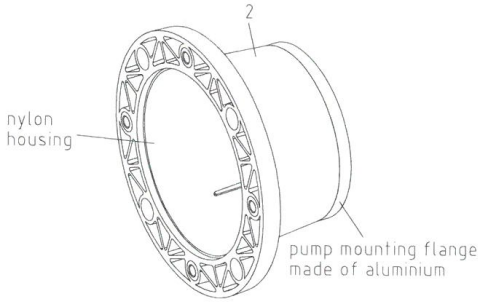

Illustration 2: Bellhousings made of nylon

Please observe protection note ISO 16016.	Drawn: 2018-03-23 Kb/Ha	Replacing: KTR-N dated 2017-03-29
	Verified: 2018-03-23 Kb	Replaced by:

KTR-Group	Bellhousing Operating/Assembly instructions	KTR-N 41010 EN Sheet: 4 of 6 Edition: 7

3 Assembly

3.2 Assembly of bellhousing

- The bellhousing will be fitted on the engine centering / pump centering (see illustration 3) and screwed. To fix the bellhousing to the engine please **only** use the respective tappings.

The screws between the nylon housing and the pump mounting flange made of aluminium must not be unscrewed on the nylon bellhousings (misalignment).

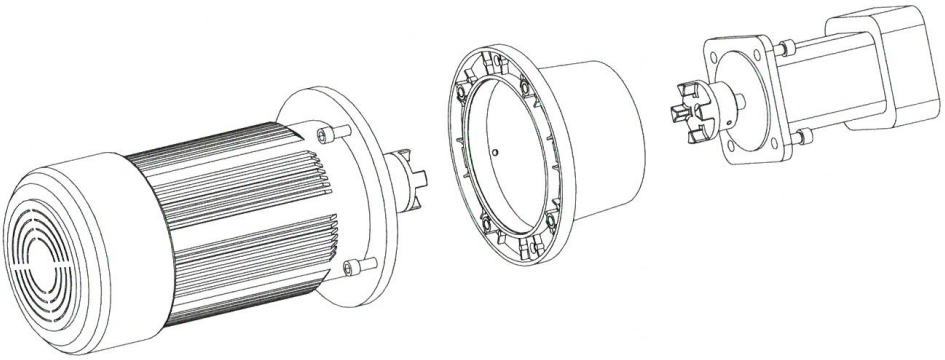

Illustration 3: Assembly of electric motor or pump with bellhousing

- The screw length must be selected such that at least the complete length of the thread in the bellhousing is used. For screw tightening torques please refer to the following tables 1, 2 and 3.
- If the bellhousing is connected with a foot flange, the length of the screws to fix the engine in the area of the foot flange must be selected such that they project through the foot flange and can be screwed with a nut (see illustration 4).

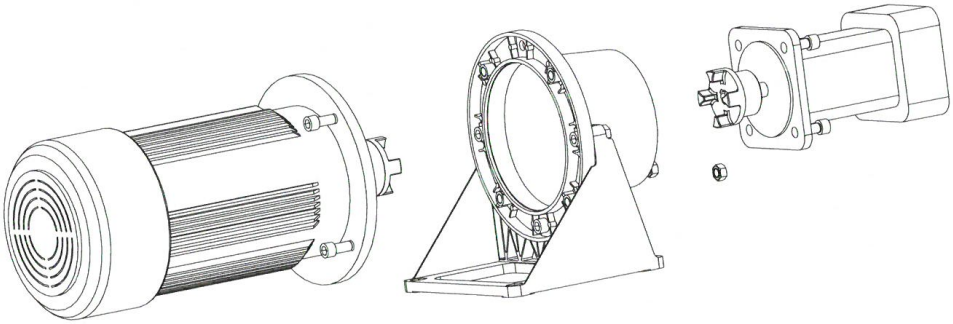

Illustration 4: Assembly of electric motor or pump with bellhousing and foot flange

Please observe protection note ISO 16016.	Drawn:	2018-03-23 Kb/Ha	Replacing:	KTR-N dated 2017-03-29
	Verified:	2018-03-23 Kb	Replaced by:	

KTR-Group	Bellhousing Operating/Assembly instructions	KTR-N 41010 EN Sheet: 5 of 6 Edition: 7

3 Assembly

3.2 Assembly of bellhousing

Continuation:

Table 1: Tightening torques of bellhousings made of aluminium and nylon

Cap screws DIN EN ISO 4762 [1]	M8	M10	M12	M16	M20
Tightening torque T_A [Nm] [2]	12	23	40	100	140 [3] / 180

1) min. property class 8.8
2) Tightening torques of property class 5.6
3) Up to bellhousing size 350

Table 2: Tightening torques of bellhousings made of cast iron

Cap screws DIN EN ISO 4762 [1]	M8	M10	M12	M16	M20	M24
Tightening torque T_A [Nm] [2]	23	46	79	195	300 [3] / 395	680

1) min. property class 8.8
2) Tightening torques of property class 8.8; friction coefficient 0.125
3) Up to bellhousing size 350

Table 3: Tightening torques of bellhousings made of steel

Cap screws DIN EN ISO 4762 [1]	M8	M10	M12	M16	M20	M24
Tightening torque T_A [Nm] [2]	34	67	115	290	490 [3] / 560	970

1) min. property class 10.9
2) Tightening torques of property class 10.9; friction coefficient 0.125
3) Up to bellhousing size 350

The screws must be generally used with Loctite, Omnifit 230M or similar adhesives for fastening.

If through holes with screws and nuts are used to fix the engine for reasons of stiffness, the tappings in the engine flange must be bored accordingly.
Please specify in your order.

STOP

Venting holes or assembly openings in the bellhousing must be closed depending on the instruction such that a contact among the coupling or shafts rotating in the bellhousing is not possible. (Here KTR provides for nylon plugs and covering grid plates, see illustration 5 and 6.)

Illustration 5: Covering grid plate

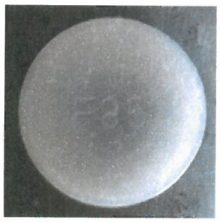

Illustration 6: Nylon plug

Please observe protection note ISO 16016.	Drawn: 2018-03-23 Kb/Ha	Replacing: KTR-N dated 2017-03-29
	Verified: 2018-03-23 Kb	Replaced by:

3 Assembly

3.2 Assembly of bellhousing

Continuation:

- If the bellhousing has a sealing function against oil flowing out of the bellhousing or penetrating into the bellhousing (e. g. lateral assembly of tank below the oil level or type V1) this must be specified in the order!
  In this case the bellhousing is inspected for tightness and provided with a marking (green point) in the area of the engine connection.
  Before assembly please make sure that the marking was made.

⚠ **The user is responsible for the sealing between bellhousing and tank wall or pump. Respective gaskets can partly be obtained from KTR.**

4 Disposal

In respect of environmental protection we would ask you to dispose of the packaging or products on termination of their service life in accordance with the legal regulations and standards that apply, respectively.

- **Metal**
  Any metal components have to be cleaned and disposed of by scrap metal.
- **Gaskets**
  Gaskets can be disposed of by residual waste.
- **Nylon materials**
  Nylon materials have to be collected and disposed of by a waste disposal company.

5 Spares inventory, customer service addresses

A basic requirement to ensure the operational readiness of the bellhousing is a stock of the most important spare parts on site.

Contact addresses of the KTR partners for spare parts and orders can be obtained from the KTR homepage at www.ktr.com.

☞ **KTR does not assume any liability or warranty for the use of spare parts and accessories which are not provided by KTR and for the damages which may incur as a result.**

A.4 Oil heater

Name	Data
Designation	Oil heater Level switch
Type	DHF22B03GG-3-T6 / INV60A01St-T6/65-16/H375-L405 IP66
Number	
Type of manual	*Technical documentation*
Manufacturer	Elmess Thermosystemtechnik GmbH & Co KG

TAG No. AERZEN	Link
Oil heater 2.2.8.X31	
Level switch 3.2.7.X31	

A.4.1 Operating instructions

Beschreibung des Druckgerätes / Description of pressure equipment

ELMESS THERMO SYSTEM TECHNIK

Übersetzung, Original Deutsch; Translation, original German

This description of the pressure equipment also applies to the pressure equipment parts referred to below as the pressure equipment.

Contents

1. Intended Use .....
2. Scope of Delivery .....
3. Handling and Storage .....
4. Mounting .....
4.1. Installation requirements .....
4.2 Connecting the pressure equipment .....
5. Fitting Out the Pressure Equipment with Limiters .....
5.1 Control equipment .....
5.2 Monitoring equipment .....
5.3 Safety equipment .....
6. Commissioning .....
7. Operation .....
7.1. General pointers .....
7.2. Startup operation .....
7.3 Normal operations .....
7.4 Taking out of operation .....
7.5 Incorrect use .....
8. Maintenance and Upkeep .....
8.1 General particulars .....
8.2 Opening and closing the pressure equipment .....
8.3 Maintenance and inspection .....
8.4 Recurrent testing by authorized monitoring agencies .....
8.5 Corrective maintenance / Repairs .....
9. Applicable Documents .....

Beschreibung des Druckgerätes / Description of pressure equipment

1. Intended Use

The intended use relates to heating up a medium with consideration given to the operating conditions which need to lie within the prescribed limits of the attached specification.

The pressure equipment is designed, built and tested in compliance with the design code applying to this pressure equipment.

2. Scope of Delivery

Pressure equipment with both process connections and the attendant documentation (ELMESS Standard).

3. Handling and Storage

The pressure equipment is only to be handled in a de-pressurised state.

Exception: Delivery with a nitrogen filling

In the event of a delivery with a nitrogen filling the process connections are to be securely closed and provided with a pressure gauge. The following labelling is to be attached to the pressure equipment:

"Caution! Internal gauge pressure under 0.5 bar!“

"Caution! Nitrogen filling! Risk of suffocation! Ventilate before entering!“

Suitable attachment devices are to ensure that the surfaces/sealing surfaces are not deformed or adversely impaired during handling.

Handling is only to be undertaken on the flat-lying pressure equipment at the envisaged attachment points. The vessel is only to be lowered and stored on suitable supports provided with delivery (wooden bolsters). Concentrated loading of the vessel wall may give rise to non-permitted deformations. Using add-on parts (e.g. el. terminal connection housings or thermal insulation) to prop up or lift the pressure equipment is not permitted.

All openings such as nozzles, flanges etc. are to be closed with suitable appliances and are only to be removed by personnel with the required knowledge (Note: do not damage the sealing surfaces!).

4. Mounting

4.1. Installation requirements

The pressure equipment is to be installed such that there is no danger to either those employed or third parties. Requisite safe distances are to be kept to in keeping with the applicable, national statutory requirements of the country of installation.

The pressure equipment is to be installed and or mounted such that

- it can be accessed for any required inspections and examinations

- the boiler/name plate can be readily seen

- it is possible to operate the pressure equipment and its fittings from a safe distance.

The pressure equipment is to be set down such that

- on account of the setting down itself

- on account of the intrinsic weight of the pressure equipment inclusive of the operating media or the pressure testing medium) and

- on account of external forces

no non-permitted displacements or inclinations arise

The pressure equipment needs to be protected from external mechanical action to the extent that no damage is expected at the pressure equipment.

The pressure equipment and its add-on parts are to be protected from the tampering of unauthorised persons.

Given the risk of failure of pressure-bearing wall parts, safety-relevant equipment parts or structural parts (steel girders, upright frames, supporting outriggers) of the pressure equipment due to non-permitted heating in the event of fire, then appropriate protective steps (fire prevention, fire protection or fire-fighting measures) are to be provided.

4.2 Connecting the pressure equipment

The pressure equipment is to be connected to the envisaged nozzles and connectors. Bringing in additional forces, bending moments and oscillations at connection nozzles from piping connections or the like is to be avoided. Connection welds at nozzles are to be undertaken and examined in line with the valid and accepted welding procedures.

Seals to be used must be for the operating case in point.

All stud bolts with nuts must be tightened to the tightening torques envisaged for this.

The operator is responsible for ensuring that the medium and the container or sealing substance are compatible.

5. Fitting Out the Pressure Equipment with Limiters

The pressure equipment needs to be fitted out with the following limiters to prevent the permitted operating limits such as pressure, temperature and filling level from being exceeded:

5.1 Control equipment

Suitable controlling equipment either manually or automatically operated for keeping to the operating parameters - such as instrumentation & control systems. Pressure, temperature and level switches to keep the operating conditions within the permitted minimum/maximum limits during the intended operation.

5.2 Monitoring equipment

Appropriate monitoring equipment for monitoring operating parameters such as instrumentation & control systems, measured value indicators, alarms, pressure, temperature and levels switches. They, in turn, provide for appropriate manual or automatic access, trigger corrective steps and/or ensure shut down and locking so as to keep the pressure equipment within the permitted operating limits.

5.3 Safety equipment

Suitable safety equipment such as safety valves or safety-relevant instrumentation & control equipment which - as a final step warding off hazards - ensures that the permitted operating limits are not exceeded.

6. Commissioning

Commissioning is only to be undertaken when the pressure equipment

- is properly fitted in a plant and the appropriate limiters are both provided and set

- has been set up in keeping with its conditions of installation

- has been checked as to a proper state in terms of mounting, conditions of installation and an assured function.

The plant operator is to arrange for the pre-commissioning inspection . In Germany it is to be carried out in accordance with §14 of the Operating Safety Ordinance. In other countries where installation is undertaken, a note is to be made of the national provisions for pre-commissioning inspection.

7. Operation

7.1. General pointers

Making use of competent and instructed personnel, the plant operator is to both operate and monitor the pressure equipment inclusive of its add-on parts such that those employed or thirdparties are not faced with hazards. Safety zones are to be adhered to. The plant operator needs to prepare all requisite operating instructions on the operation of the pressure equipment and/or plant for the operating and maintenance personnel

Attention is to be given to the national requirements of the country of installation in question on operating the pressure equipment. The specified max. permitted temperatures and/or pressures must not be exceeded.

7.2. Startup operation

Starting up the pressure equipment is to be such that no non-permitted stress peaks develop from the rise in temperature and/or pressure.

During startup the pressure equipment is to be constantly monitored and checked as to possible leakage.

7.3 Normal operations

Pressure equipment is only to be operated when the safety-relevant required equipment parts remain constantly effective, are not placed out of service during the operation or their intended action is not modified.

7.4 Taking out of operation

Shutting down the pressure equipment is to be such that no non-permitted stress peaks arise from the drop in temperature and/or pressure.

7.5 Incorrect use

If an immediate hazardous situation comes to light when the pressure equipment is operated - due, for instance, to an unscheduled reaction sequence or a hazardous intervention from outside - then the required counter measures are to intervene and the pressure equipment is possibly to be taken out of service.

The pressure equipment is to be subjected to a particular inspection should the permitted pressure in the event of operating trouble be exceeded and/or the permitted operating temperature be exceeded or fallen short of or damage be incurred by the pressure equipment and/or its add-on parts.

8. Maintenance and Upkeep

8.1 General particulars

All requisite steps for inspection, maintenance and corrective maintenance are to be implemented in accordance with the national specifications of the country of installation and of the manufacturer.

8.2 Opening and closing the pressure equipment

Pressure equipment is to be securely closed such that all the design-envisaged closure plugs are used as intended. Sealing surfaces must be clean and undamaged.

Screw plugs are only to be tightened both carefully and uniformly to the extent as is required for sealing purposes. The specified tightening torques are to be adhered to.

Screw plugs on pressurized pressure equipment are only to be tightened by personnel instructed to do this and with attention paid to any particular precautionary steps.

Screw plugs must not be undone on pressurized pressure equipment.

Only when the pressure is at the atmospheric pressure level are closure plugs and inspection ports to be opened. Once the pressure supply line is closed, matching the pressure to that of the atmosphere is done by de-pressurizing and /or venting. The screw plugs are then to be slackened such that they still hold the cap plug. This cap plug is then to be slightly vented and loosened such that it no longer adheres to its fitting.

Specific protective measures such as personal protective gear, are needed if a hazard is posed by fluid emerging when the closure plugs are opened. The pressure equipment must not be closed or opened under high temperatures.

8.3 Maintenance and inspection

Regular maintenance undertaken on the pressure equipment by competent personnel is to be such that it remains constantly seal-tight under the mechanical, chemical and thermal stresses and loads associated with the envisaged mode of operation.

In keeping with the operating conditions and findings made, the plant operator is to establish the required maintenance and inspection steps in the operating instructions.

In particular, inspection and maintenance includes ensuring and monitoring

- seal-tightness
- conditions of installation and safety zones
- labelling
- proper functioning of the safety, monitoring and warning equipment
- proper condition and functioning of the adds-on parts
- state of the welds
- wall thickness if subject to corrosion.

8.4 Recurrent testing by authorized monitoring agencies

According to §15 of the BetrSichV (Operating Safety Ordinance) the plant operator is to subject the pressure equipment installed in Germany to a recurrent test as to being in a proper condition. The respective national requirements are to be applied in other countries where installation has taken place.

The pressure vessel was designed, assuming static operation.

According to AD2000 S1 (section 1.4), any number of partial load changes as the vibration width must not exceed a pressure fluctuation of 10% of the design pressure.

According to DIN EN 13445-3, the height of any number of partial load changes shall be evaluated in accordance with Formula 5.4-2.

8.5 Corrective maintenance / Repairs

All faulty closure elements such as worn, cracked and bent screws, broken or otherwise damaged nuts and damaged seals must cease to be used and are to be replaced.

Corrective maintenance possibly adversely affecting the safety of the pressure equipment, such as steps which change material properties through, for instance, welding and cold and heat deformation , is only to be carried out in compliance with the national requirements of the country of installation.

Only qualified technical staff are to carry out corrective maintenance and repairs which, if need be, are to be inspected by an authorised agency.

9. Applicable Documents

The design code applying to the pressure equipment

In the case of installation in Germany:
Operating Safety Ordinance
Technical norms for pressure vessels (TRB)

In other countries:
The respective national requirements

Übersetzung, Original Deutsch; Translation, original German

Table of content

1. Design and application .....

2. Conditions for safe function and operation of the level switch .....

3. Fitting and installation .....

4. Adjustments .....

5. Maintenance, exchange of spare parts and malfunctions .....

1. Design and application

The Level switch is manufactured in explosion proof design for operation in category II 2 G or D.

The Level switch serves for heating of non-flammable fluids within category 2 G or D. The level of the fluid is monitored by contacts, which are switched by one or more floater.

The Level switch must be suitable for the specified application and may only be used in a manner appropriate to its purpose.

The technical data and type of protection and temperature class are included in the Specification, in part on the nameplate and dimensional diagram.

2. Conditions for safe function and operation of the Level switch

- The Level switch has to be mounted in that way, thermal influences of the medium resp. of the vessel, in that the Level switch is installed, is negligible.
- The Level switch must be directly submerged in the medium.
- The Level switch may only be operated in the specified mounting position and under the specified ambient temperature conditions.
- The surface temperature of the Level switch must not exceed the maximum temperature of the given temperature class (observe heat leading). Respectively a cool clearance is necessary.
- If the Level switch operates at the same time within category 2 G and D, special restrictions may be necessary.
- Only the manufacturer is permitted to carry out repairs on the flame-proof gaps or openings.

3. Fitting and installation

If the Level switch is not to be immediately fitted and operated, the storage instructions included with every Level switch delivery must be observed. The Level switch must be protected from damp entering the device in particular.

Material appropriate to the category is to be used when fitting and operating the device.

Applicable regulations, e.g. DIN IEC 60364 must be observed when fitting, installing and operating the device. In Europe (EU) the European standards IEC/EN 60079-14, IEC/EN 60079-17, IEC/EN 61241-17 and the EC directive 1999/92/EC apply. Furthermore, local regulations, such as the explosion protection regulations of the Chemical Industry Employer's Liability Insurance Association and the Ordinance on Industrial Safety and Health for Germany, have to be observed.

The erection of the Level switch is to be done in accordance to the dimensional drawing, specification and protected against solar radiation. Especially the mounting position has to be considered.

The electrical installation must be done on terminal box by using fix connected wiring, which meets harmonised standards, with a cross-section appropriate to the power rating on the matching terminals and concerning a 12 mm air distance in between. The Level switch must be protected with an appropriate back-up fuse.

For each cable leading in there is an earth conductor, which must be connected.

Cable entries respectively open holes, which are not used, must be safely shut in accordance to IEC/EN 60079.

A potential equalisation terminal of type of protection Ex e is available on the exterior of each casing, to which the heater must be connected with the external potential equalisation source.

A.4.2 Declaration of Conformity

ELMESS
THERMO SYSTEM TECHNIK

EU Konformitätserklärung
EU Declaration of Conformity **Seite /*Page* 1 / 1**

Erklärung von / *Declaration of*

ELMESS-Thermosystemtechnik GmbH & Co. KG
Nordallee 1
D-29525 Uelzen

Hiermit wird erklärt, dass das Druckgeräteteil / *We herewith declare that the pressure apparatus part*

Ex-Niveauwächter, Typ / *Ex Level Switch, type*

INV60A01St-T6/65-16-H375-L405

Fabrik-Nr. / *Fabric.-No.*

22-0410-001-016

(Erzeugnis, Typ, Beschreibung / *Good, type, description)*

in Übereinstimmung mit den Anforderungen gemäß Druckgeräterichtlinie 2014/68/EU (geeignet für den Einbau in Druckbehälter bis Kategorie I) sowie Europäischer Normen bzw. nationaler Normen entwickelt und hergestellt worden ist / *has been designed, manufactured and tested in agreement according to PED 2014/68/EU (suitable for mounting in pressure vessels up to Category I) and European Standards resp. national Standards.*

ELMESS-Thermosystemtechnik GmbH & Co. KG
Apparate + Heizungen / - Apparatus + Heaters

Uelzen, 07.07.2022

i.V.
(Uwe Riedler , Senior Design Engineer)

A.4.3 Drawing

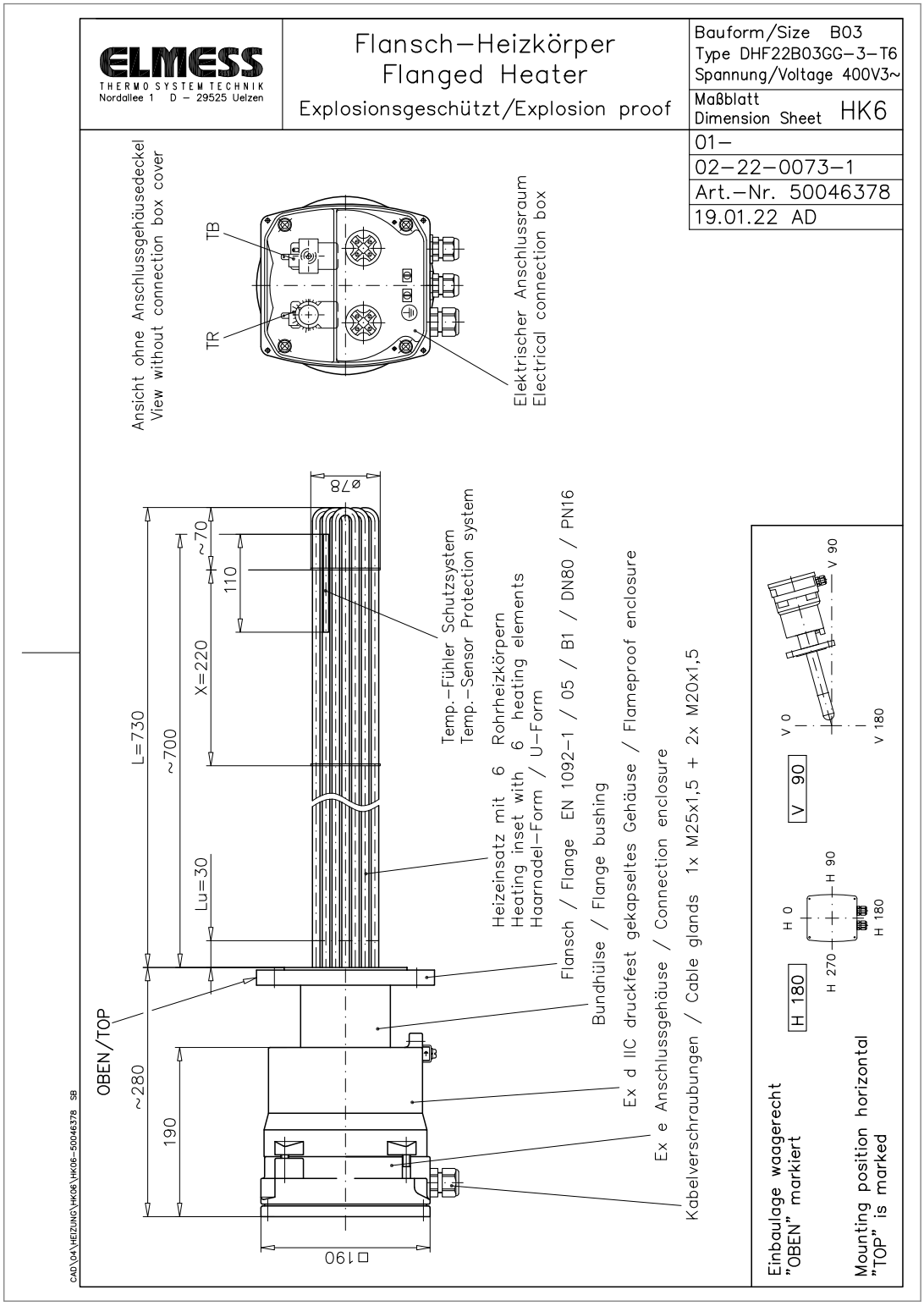
ELMESS
THERMO SYSTEM TECHNIK
Nordallee 1 D – 29525 Uelzen
Flansch–Heizkörper
Flanged Heater
Explosionsgeschützt/Explosion proof
Bauform/Size B03
Type DHF22B03GG–3–T6
Spannung/Voltage 400V3~
Maßblatt
Dimension Sheet HK6
01–
02–22–0073–1
Art.–Nr. 50046378
19.01.22 AD
Ansicht ohne Anschlussgehäusedeckel
View without connection box cover
TB
TR
Elektrischer Anschlussraum
Electrical connection box
Ø78
~70
110
X=220
L=730
~700
Lu=30
OBEN/TOP
~280
190
□190
Temp.–Fühler Schutzsystem
Temp.–Sensor Protection system
Heizeinsatz mit 6 Rohrheizkörpern
Heating inset with 6 heating elements
Haarnadel–Form / U–Form
Flansch / Flange EN 1092–1 / 05 / B1 / DN80 / PN16
Bundhülse / Flange bushing
Ex d IIC druckfest gekapseltes Gehäuse / Flameproof enclosure
Ex e Anschlussgehäuse / Connection enclosure
Kabelverschraubungen / Cable glands 1x M25x1,5 + 2x M20x1,5
V 0
V 90
V 180
H 0
H 90
H 180
H 270
Einbaulage waggerecht
"OBEN" markiert
Mounting position horizontal
"TOP" is marked
CAD\04\HEIZUNG\HK06\HK06–50046378 SB

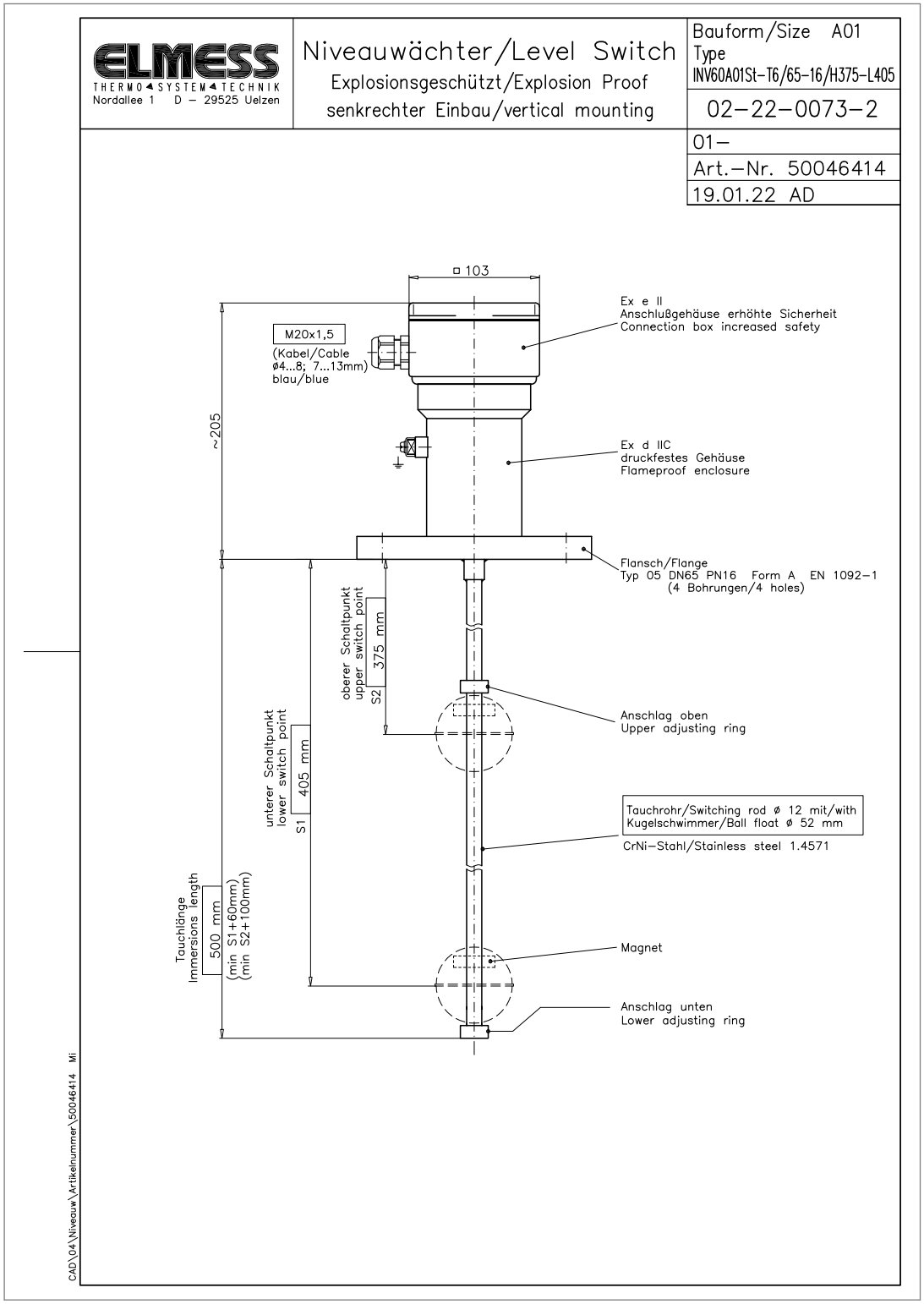
ELMESS
THERMO SYSTEM TECHNIK
Nordallee 1 D – 29525 Uelzen
Niveauwächter/Level Switch
Explosionsgeschützt/Explosion Proof
senkrechter Einbau/vertical mounting
Bauform/Size A01
Type
INV60A01St-T6/65-16/H375-L405
02-22-0073-2
01-
Art.-Nr. 50046414
19.01.22 AD
□ 103
M20x1,5
(Kabel/Cable
ø4...8; 7...13mm)
blau/blue
~205
Ex e II
Anschlußgehäuse erhöhte Sicherheit
Connection box increased safety
Ex d IIC
druckfestes Gehäuse
Flameproof enclosure
Flansch/Flange
Typ 05 DN65 PN16 Form A EN 1092-1
(4 Bohrungen/4 holes)
oberer Schaltpunkt
upper switch point
S2 375 mm
Anschlag oben
Upper adjusting ring
unterer Schaltpunkt
lower switch point
S1 405 mm
Tauchrohr/Switching rod ø 12 mit/with
Kugelschwimmer/Ball float ø 52 mm
CrNi-Stahl/Stainless steel 1.4571
Tauchlänge
Immersions length
500 mm
(min S1+60mm)
(min S2+100mm)
Magnet
Anschlag unten
Lower adjusting ring
CAD\04\Niveauw\Artikelnummer\50046414 Mi

A.4.4 Hook-up Diagram

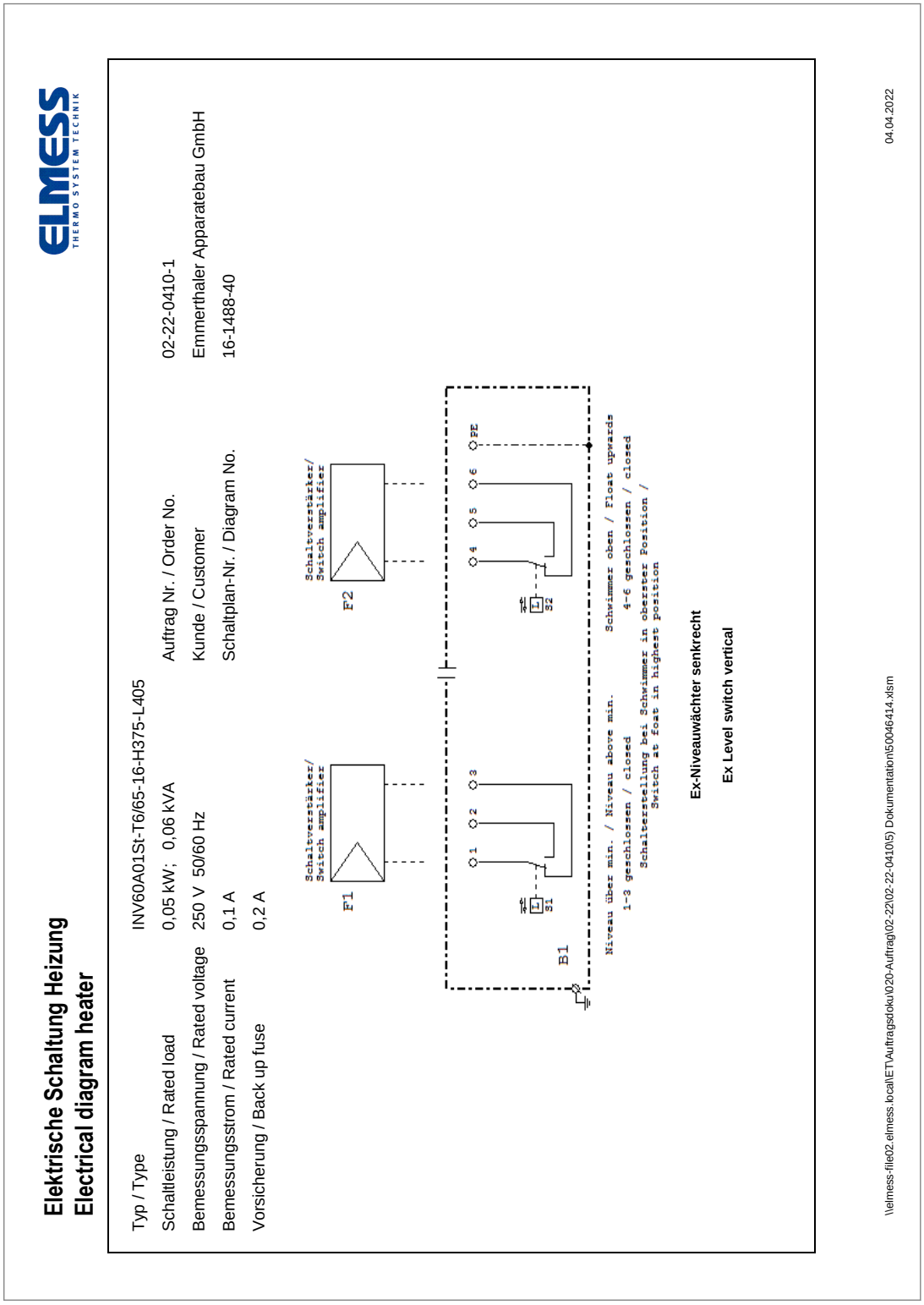

A.4.5 Data sheets

Heater

Specification
Translation, Original German

ELMESS THERMO SYSTEM TECHNIK

Client	Emmerthaler Apparatebau GmbH	Date	19.01.2022	Rev00
Fabric No.	22-0073 - 001 - 006	Piece	6	
Order No. / Position	02-22-0073 - 1	Client details		
Article No.	50046378			
Name	Ex-Flanged Heater	Type	**DHF22B03GG-3-T6**	

1 Degree of Protection IEC/EN 60529		IP 66
2 Ex Marking and Type of Protection		
IEC/EN 60079		(Ex) II 2G Ex db eb IIC T6 Gb
IEC/EN 60079-31		
EU Type Examination Certificate | IECEx Certificate		IBExU 15 ATEX 1019 X ----
EU Declaration of Conformity		ELM 20-003
3 Electrical data and connection		
Power groups	E1	Complete
Rated power		3 kW
Rated current		4,4 A
Back up fuse		10 A
Rated voltage		400 V 3/PE 50/60 Hz
Specific surface load		1,3 W/cm²
Control circuit temperature monitoring		max. 10 A; 230 V 1/N/PE 50/60 Hz
Control circuit additional monitoring devices		----
Anti condensation heater	E2	----
Connection diagramm		16-1461-40-01
Connection cross section power circuit		6/4 mm²
Connection cross section control circuit		max. 6/4 mm²
Cable entry power circuit / material		1x M25x1,5; for cable-ø 9…17 mm / PA tightening torque: 5,5 Nm
Cable entry power circuit / material		----
Cable entry control circuit / material		2x M20x1,5; for cable-ø 7…13 mm / PA tightening torque: 1,5 Nm
Cable entry anti condensation heater / material		----
4 Protection system		
Temperature monitoring	B1	TL = T6 respectively max. 80 °C - effective on medium temperature
Isolation resp. residual current device		min. 50 Ω per voltage resp. max. 100 mA
Level monitoring device	B3	at site to build close to the heater, adjusted at 50 mm minimum overlap
Additional monitoring devices or sensors		
Temperature monitor, regulators	B2	TR = 0…70 °C, works adjusting at 40 °C - effective on medium temperature
Temperature monitor, regulators	B4	----
5 Dimensions		
Dimension sheet / drawing		HK6
Installation length L		730 mm
Unheated length Lu		30 mm
Temperature reduct. length Lt		----
Heating bundle diameter		78 mm
Distance of sheets		220 mm
Flange		EN 1092-1 / 05 / B1 / DN80 / PN16
6 Material & Surface		
Heating elements		1.4541 metallic bright
Cartridge pipe		---- ----
Flange		1.4541 metallic bright
Connection enclosure		Cast iron varnished with Hammerschlag
7 Operation data		
Medium / flow rate		Oil / ----
Operating pressure		atm.
Working temperature		max. 70 °C
Ambient temperature / max. housing temperature		-20 ... +40 °C / 60 °C
Mounting position		in aggregate, tank or container; Heater horizontal; "TOP" is marked; cable glands from bottom side; H 180, V 90
8 Design data		
Design code		AD 2000
Allowable operating pressure		0,5 bar g
Allowable temperature min. / max.		-20 / +80 °C
Fluid group / diagramm		----
Category / module		----
Inspection / certificate / report		Works inspection / EN 10204-3.1 / 22-0073 - 1
9 Documentation		
Language		german / english / ----
Operation manual		DH...; EH...
10 Remarks		
11 Internal remarks		Test pressure: 5 bar g
Heating elements: pieces; shape; wiring; type		6 H; YP; NR 160V 10G / 500W / 230V
Solder / welding filler / heating elements diameter		A 314 / 1.4576 / 8,5 mm
In charge / Project team		Mr. Lemmermann Mr. Drögemüller

\\Elmess-file02\et\Auftragsdoku\020-Auftrag\02-22\02-22-0073\5) Dokumentation\50046378.xlsm 19.01.2022

Level Switch

Specification

Translation, Original German

Client	Emmerthaler Apparatebau GmbH	Date	04.04.2022	Rev00
Fabric No.	22-0410-001 - 016	Piece	16	
Order No. / Position	02-22-0410-1	Client details		
Article No.	50046414			
Name	Ex Level switch vertical	Type	**INV60A01St-T6/65-16-H375-L405**	

1 Degree of Protection IEC/EN 60529		IP 66
2 Ex Marking and Type of Protection		
IEC/EN 60079		(Ex) II 2G Ex ib IIC T6 Gb
EC Type Examination Certificate | IECEx Certificate		TÜV 12 ATEX 7247 X ----
EU Declaration of Conformity		ELM 15-016
3 Electrical data and connection		
Rated load	max.	0,05 kW; 0,06 kVA
Rated current	max.	0,1 A
Back up fuse	max.	0,2 A
Rated voltage	max.	250 V 50/60 Hz
SIL classification		PFH < 1*10-6; PFD (Tproof <= 1 Jahr) < 1*10-3; HFT 0; SIL 1 W/cm²
Connection diagramm		16-1488-40
Max. cross section		6/4 mm²
Cable entry power circuit / material		1x M20x1,5; for cable-ø 7...13 mm / PA (blue) tightening torque: 1,5 Nm
----		----
----		----
----		----
----		----
4 Protection system		
S1 Switching level high		375 mm
S2 Switching level low		405 mm
5 Dimensions		
Dimension sheet / drawing		50046414
Immersion pipe length		500 mm
Flange		EN 1092-1 / 05 / A / DN65 / PN16 (4 holes)
----		----
----		----
6 Material & Surface		
Immersion pipe		1.4571 metallic bright
Flange		1.4571 metallic bright
Float		1.4571 metallic bright
Casing		EN-GJL-250 / C-steel varnished with Hammerschlag
7 Operation data		
Medium		Oil
Operating pressure	max.	10 bar g
Working temperature	max.	100 °C
Ambient temperature / max. housing temperature		-40 ... +40 °C / 60 °C
Mounting position		in aggregate, tank or container; Level switch vertical; connection casing on top; cable glands optional; H ---, V 0
8 Design data		
Design code		PED 2014/68 EU AD 2000
Allowable operating pressure		10 bar g
Allowable temperature min. / max.		-40 / +100 °C
Fluid group / diagramm		1 / 3
Category / module		suitable for mounting in pressure vessels up to Category I
Inspection / certificate / report		Works inspection / EN 10204-3.1 / K-02-22-0410-1
9 Documentation		
Language		german / english / ----
Operation manual		IN.60A….-T6/…
10 Remarks		
11 Internal remarks		Test pressure: 14,3 bar g
Solder / welding filler		---- / 1.4576 - 1.4332
In charge / Project team		Mr. Lemmermann Mr. Kruskop

\\elmess-file02.elmess.local\ET\Auftragsdoku\020-Auftrag\02-22\02-22-0410\5) Dokumentation\50046414.xlsm 04.04.2022

A.4.6 Quality documentation

ELMESS
THERMO SYSTEM TECHNIK

Nordallee 1, 29525 Uelzen

Hersteller-Bescheinigung über Schluss- und Druckprüfung
Manufacturer Certificate *on the final inspection of the construction and hydrostatic test*
nach / *acc.* EN 10204-3.1 **Seite / *page* 1 / 1**

Nach DGRL 2014/68/EU wird bescheinigt, dass dieses Druckgeräteteil ordnungsgemäß hergestellt und einer Druckprüfung unterzogen wurde:
According PED 2014/68/EU we confirm orderly manufacturing and hydrostatic test of the pressure equipment part:

Objektart/*Type* :	Ex-Niveauwächter *Ex Level Switch* INV60A01St-T6/65-16-H375-L405	**Kennzeichnung auf / *Marking on*** :	Flansch / *Flange*
Auftrags-Nr./*Job No.* :	02-22-0410-1	**Fluidgruppe/Diagramm *Fluid group/Diagram***	1 / 3
Prüfgrundlagen/ *Testing code* :	DGRL 2014/68/EU, AD 2000 PED 2014/68/EU, AD 2000	**Kategorie / Modul *Kategory / Modul*** :	geeignet für Einbau in Behälter bis Kategorie I
Hersteller/Lieferer *Manufacturer/Supplier* :	ELMESS-Thermosystemtechnik GmbH & Co.KG	**Fabrik-Nr. *Fabrication No.*** :	22-0410-001-016
Herstellort/*Location* :	D-29525 Uelzen	**Baujahr *Year of construction*:**	2022

1. Druckprüfung / *Hydrostatic test* Datum/*date*: 15.+16.06.2022

Raum/*Chamber*		1)	2)			1)	2)
max. zul. Druck *max. allow. pressure*	: bar	10		Prüfdruck *Test pressure*	: bar	14,3	
zul.min./max.Temperatur : *allow. min./max. temperature*	°C	-40 / +100		Prüfmedium *Test medium*	:	Wasser *Water*	
				Prüfzeit *Time of test*	: min.	30	

2. Schlussprüfung / *Final Construction Inspection* Datum/*date*: 15.+16.06.2022

Die Ausführung entspricht der Zeichnungs-Nr.: 50046414
The design complies with the drawing no.

Zum Zeichen der bestandenen Prüfung, die eine Übereinstimmung mit den Prüfgrundlagen ergab, wurde der Heizflansch gestempelt.
As evidence of the heating flange being examined, tested and found satisfactory with the requirements, the heating flange is accepted and stamped.

Uelzen, 06.07.2022

i. V.
Unterschrift Zeichnungsberechtigter
Signature authorized to sign

Ihre Referenz:: 07-22-1719 Pos.-Nr. DL-002321/7/BC Artikel 10706522 90929281

A1 : 90929281 - 0001 - rff

DIN EN 10204:2004 3.1 CERTIFICATE

Inspection Certificate acc. to DIN EN10204:2004 3.1

根据欧盟 EN10204:2004 标准的 3.1 检验证书

Certificate No./ 证书编号：IC-JYHF21-05-27-35

01 202 CHN/Q-05 0195

Customer/客户：	rff Rohr Flanscn Fitting Handels Gmbh
Order No/订单号：	099/76077787/EK
Article/品名：	Forged Flange /锻压法兰 made of round bar
Specification/技术条件：	DIN EN 10222-5 and AD2000 – W2,W9,W10,TRD100, NACE MR01-75-2005/MR01-03-2007.
	ASME CODE SEC. II PART A 2017; DIN EN1092-1 09/2008
Material grade/材料规格：	1.4571-ASTM A/SA 182-17 F316Ti
Delivery condition/交货状态：	1050~1120℃×1~2h Solution treatment and quenched in water
	1050~1120℃×1~2h 固溶水淬热处理
Melting process/熔炼方式：	Electric furnace /电炉熔炼
Marking/标识：	JHF STANDARD NOMINAL PRESSURE NOMINAL SIZE MATERIAL HEAT WI SPECIMEN
Stamp of manufacturer/制造厂钢印：	JHF
Work inspector's stamp/工厂检验师钢印：	WW

A. Content of the delivery/交货内容

Item No./序号	Quantity/数量	Description/规格	Heat No./炉号	Batch No./批号	Specimen No./试样号
4170	150	EN1092-1 TYPE 05A PN16 DN65 4holes	21BM132	21JHF0623-2	21BM132-21JHF0623-2

B. Chemical analysis/化学分析

Heat-Batch No./炉批号	C%	Si%	Mn%	P%	S%	Cr%	Mo%	Ni%	Ti%
1.4571	≤0.08	≤1.00	≤2.00	≤0.045	≤0.030	16.5-18.5	2.0-2.5	10.5-13.5	≥5×C%≤0.7
F316Ti	≤0.08	≤1.00	≤2.00	≤0.045	≤0.030	16.0-18.0	2.0-3.0	10.0-14.0	≥5×C%
21BM132-21JHF0623-2	0.032	0.471	1.038	0.039	0.001	16.577	2.061	10.6	0.339

C. Mechanical properties tests/机械性能试验 Position of specimen/试样位置：Tangential/切向

炉批号 Heat-Batch No.	试验温度 TestTemp	屈服强度 Yield Strength N/mm²		拉伸强度 Tensile Strength	延伸率 Elongation		断面收缩率 Reduction of Area	冲击性能试验（ISO-V） Impact energy (ISO-V)				硬度 Hardness
Nr. / No.	RT 室温	$R_{t0.2}$	$R_{p0.2}$	Rm N/mm²	A%	A4D%	ψ%	1	2	3	Avg J	HB
1.4571		≥210	≥245	510-710	≥35%	-	-	-	-	-	≥60	150-200
F316Ti		≥205	-	≥515	-	≥30%	≥50%	-	-	-	-	-
21BM132-21JHF0623-2		254	289	569	52	58	67	252	243	259	251	163
21BM132-21JHF0623-2		250	285	570	51	56	70	250	244	257	250	161
21BM132-21JHF0623-2（-196℃）		-	-	-	-	-	-	206	194	199	200	-
21BM132-21JHF0623-2（-196℃）		-	-	-	-	-	-	205	197	200	201	-

D. Visual and dimensional inspection / 外观及尺寸检查：without complaint /合格

Intercrystalline corrosion test EN ISO 3651-2 and ASTM A262 pract. E/不锈钢晶间腐蚀试验：without complaint /合格

Positive Material Inspection/ without complaint

Mechanical properties acc. to DIN EN 10002-1:2001-12

E. The material is manufactured according to a Quality management system approved and registered to ISO 9001, AD2000 - W2,W9,W10 and PED2014/68/EU by TÜV Rheinland.

Place/地点	*Date/日期*	*Work inspector/工厂检验师*
JIANGYIN/江阴	2021.08.16	

Jiangyin City Haifeng Metals Economic Trade Co., Ltd.
Longyun Road, Zhouxi Industrial Park, Zhouzhuang, Jiangyin City, Jiangsu Province, P.R. China

13.05.22 - rff-Auftrag 13284562 Pos.-Nr. 20 Seite 1 von 1 Charge 21BM132

Ihre Referenz:: 07-22-1719 Pos.-Nr. DL-002321/7/BC Artikel 10706522 90945282

AT: 90945282 - 0001 - rff

DIN EN 10204:2004 3.1 CERTIFICATE

Inspection Certificate acc. to DIN EN10204:2004 3.1

根据欧盟 EN10204:2004 标准的 3.1 检验证书

Certificate No./ 证书编号：IC-JYHF21-07-15-15

TÜV

01 202 CHN/Q-05 0195

Customer/客户：	rff Rohr Flanscn Fitting Handels Gmbh
Order No/订单号：	099/76077870/EK
Article/品名：	Forged Flange /锻压法兰 made of round bar
Specification/技术条件：	DIN EN 10222-5 and AD2000 – W2,W9,W10,TRD100, NACE MR01-75-2015/MR01-03-2015.
	ASME CODE SEC.Ⅱ PART A 2017; DIN EN1092-1 09/2008
Material grade/材料规格：	1.4571-ASTM A/SA 182-17 F316Ti
Delivery condition/交货状态：	1050~1120℃×1~2h Solution treatment and quenched in water
	1050~1120℃×1~2h 固溶水淬热处理
Melting process/熔炼方式：	Electric furnace /电炉熔炼
Marking/标识：	JHF STANDARD NOMINAL PRESSURE NOMINAL SIZE MATERIAL HEAT WI SPECIMEN
Stamp of manufacturer/制造厂钢印：	JHF
Work inspector's stamp/工厂检验师钢印：	WW

A. Content of the delivery/交货内容

Item No./序号	Quantity/数量	Description/规格	Heat No./炉号	Batch No./批号	Specimen No./试样号
1130	150	EN1092-1 TYPE 05A PN16 DN65 4holes	CY2106-066	21JHF0812-1	CY2106-066-21JHF0812-1

B. Chemical analysis/化学分析

Heat-Batch No./炉批号	C%	Si%	Mn%	P%	S%	Cr%	Mo%	Ni%	Ti%
1.4571	≤0.08	≤1.00	≤2.00	≤0.045	≤0.030	16.5-18.5	2.0-2.5	10.5-13.5	≥5×C%≤0.7
F316Ti	≤0.08	≤1.00	≤2.00	≤0.045	≤0.030	16.0-18.0	2.0-3.0	10.0-14.0	≥5×C%
CY2106-066-21JHF0812-1	0.036	0.48	1.29	0.039	0.001	16.77	2.06	10.60	0.40

C. Mechanical properties tests/机械性能试验 Position of specimen/试样位置：Tangential/切向

炉批号 Heat-Batch No.	试验温度 TestTemp	屈服强度 Yield Strength N/mm²		拉伸强度 Tensile Strength	延伸率 Elongation		断面收缩率 Reduction of Area	冲击韧能试验（ISO-V） Impact energy (ISO-V)				硬度 Hardness
Nr. / No	RT 室温	R_{eL}	R_{p1}	Rm N/mm²	A%	A4D%	ψ%	1	2	3	Avg J	HB
1.4571		≥210	≥245	510-710	≥35%	-	-	-	-	-	≥60	150-200
F316Ti		≥205	-	≥515	-	≥30%	≥50%	-	-	-	-	-
CY2106-066-21JHF0812-1		269	304	581	60	65	77	255	250	248	251	164
CY2106-066-21JHF0812-1		266	301	580	59	66	73	252	247	244	248	168
CY2106-066-21JHF0812-1（-196℃）		-	-	-	-	-	-	205	200	199	201	-
CY2106-066-21JHF0812-1（-196℃）		-	-	-	-	-	-	202	197	195	198	-

D. Visual and dimensional inspection / 外观及尺寸检查：without complaint /合格

Intercrystalline corrosion test EN ISO 3651-2 and ASTM A262 pract. E/不锈钢晶间腐蚀试验：without complaint /合格

Positive Material Inspection/ without complaint

Mechanical properties acc. to DIN EN 10002-1:2001-12

E. The material is manufactured according to a Quality management system approved and registered to ISO 9001, AD2000 - W2,W9,W10 and PED2014/68/EU by TÜV Rheinland.

Place/地点 *Date/日期* *Work inspector/工厂检验师*

JIANGYIN/江阴 2021.09.24

Jiangyin City Haifeng Metals Economic Trade Co., Ltd.
Longyun Road, Zhouxi Industrial Park, Zhouzhuang, Jiangyin City, Jiangsu Province, P.R. China

13.05.22 - rff-Auftrag 13284562 Pos.-Nr. 20 Seite 1 von 1 Charge CY2106-066

A.4.7 Test documentation

ELMESS THERMO SYSTEM TECHNIK	**Prüfprotokoll / Test Report**	Q065_Rev01

Kunde / Customer — ***Emmerthaler Apparatebau GmbH***

Fabriknummer / Fabrication No.			***22-0410-001…016***
Auftrag Nr. / Order No.			***02-22-0410-1***
Artikelnummer / Article No.			***50046414***
Typ / Type			***INV60A01St-T6/65-16/H375-L405***
Schutzart / Degree of protection		IP	***66***
Ex-Kennzeichnung & Zündschutzart / Ex-Marking & Type of Protection	EN 60079, EN 61241		(Ex) II 2G / Ex ib IIC T6 Gb

Technische Daten / Technical data

Stufe, Gruppe / Stage, Group			***1***
Schaltleistung / Rated Load		[kW]	***0,05 / 0,06 kVA***
Bemessungsspannung / Nominal voltage 50 / 60 Hz	max.	[V]	***250***
Bemessungsstrom / Nominal current	max.	[A]	***0,1***
spezifische Oberflächenbelastung / specific surface load		[W/cm²]	***-***
Steuerstromkreis / Control circuit			***-***
Gehäuseheizung / Anticondensation heater		[W]; [V]	***n.a.***

Schutzsystem / Protection system

Schutz-Temperatur-Begrenzer / Thermal cut out eB*6***	***n.a.***
Temperaturbegrenzer / Temperature limiter	***n.a.***
Temperaturregler / Temperature regulator	***n.a.***
Temperaturwächter / Temperature monitor	***n.a.***
Temperaturfühler / Temperature sensor	***n.a.***
Messumformer / Transmitter	***n.a.***
weitere Überwachungsgeräte, Sensoren / additional monitoring devices, sensors	
Schutz-Temperatur-Begrenzer / Thermal cut out eB*6***	***n.a.***
Temperaturbegrenzer / Temperature limiter	***n.a.***
Temperaturregler / Temperature regulator	***n.a.***
Temperaturwächter / Temperature monitor	***n.a.***
Temperaturfühler / Temperature sensor	***n.a.***
Messumformer / Transmitter	***n.a.***

Einbaulage / Mounting Position

beliebig / any	***H -***
Heizkörper senkrecht (Anschlussgehäuse oben)Heater Vertikal (Connection Box from top)	***V 0***

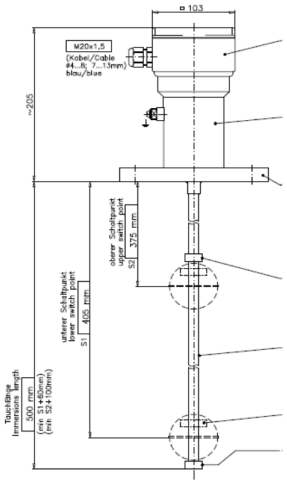

Messungen / Measurements

Widerstand Heizung / Resistance Heater		[Ω]	***-***
Hochspannung / High voltage	***60sec.***	[kV]	***1,8***
Ableitstrom / Fault current		[mA]	***0,1***
Isolation / Isolation		[V]	***1000***
Isolationswiderstand / Isolation resistance		[MΩ]	***>400***
Einstellung Schutz-Temperatur-Begrenzer eB*6*** TB/TR Adjustment Thermal cut out eB*6*** TL/TR		[°C]	***n.a.***
Einstellung Begrenzer / Limiter adjustment			***n.a.***
Einstellung Regler / Regulator adjustment			***n.a.***
Einstellung Wächter / Monitor adjustment			***n.a.***
Lage heißester Punkt / Position of Hot Spot LM1		*mm*	***-***
Temperatur heißester Punkt / Hot spot temperature		M1	***-***

Prüfung / Test ***06.07.2022*** durch / by ***Tö***

Prüfzeichen - Unterschrift / Test mark - Signature ☒ *S. Töpler*

Elmess Thermosystemtechnik GmbH & Co. KG, Nordallee 1, 29529 Uelzen

N:\ETSF\ETSF-Q\Prüffeld\Prüfbuch\02-22\02-22-0410-1.xlsx www.elmess.de 06.07.2022

A.5 Thermometer

Name	Data
Designation	*Pressure gauge*
Type	233.50
Number	
Type of manual	*Technical documentation*
Manufacturer	WIKA Alexander Wiegand SE & Co. KG

Place of installation	TAG No.	Link
Blower oil system	3.2.2.X31	
	3.2.2.X31	
	3.2.2.X20	
Gearbox oil system 50 L	3.2.2.X30	linktarget doesn't exist but @y.link.required='true'
	3.2.2.X51	
	3.2.2.X52	
Gearbox oil system 100 L	3.2.2.X30	
	3.2.2.X51	
	3.2.2.X52	

A.5.1 Data sheets

Mechanical pressure measurement

Bourdon tube pressure gauge Stainless steel version Models 232.50, 233.50

WIKA data sheet PM 02.02

for further approvals see page 3

Applications

- With liquid-filled case for applications with high dynamic pressure loads or vibrations 1)
- For gaseous and liquid aggressive media that are not highly viscous or crystallising, also in aggressive ambience
- Process industry: Chemical/petro-chemical, power stations, mining, on- and offshore, environmental technology, machine building and general plant construction

Special features

- Excellent load-cycle stability and shock resistance
- All stainless steel construction
- German Lloyd approval
- Scale ranges up to 0 … 1,600 bar

Bourdon tube pressure gauge model 232.50

Description

Design
EN 837-1

Nominal size in mm
63, 100, 160

Accuracy class
NS 63: 1.6
NS 100, 160: 1.0

Scale ranges
NS 63: 0 ... 1 to 0 ... 1,000 bar
NS 100: 0 ... 0.6 to 0 ... 1,000 bar
NS 160: 0 ... 0.6 to 0 ... 1,600 bar
or all other equivalent vacuum or combined pressure and vacuum ranges

1) Model 233.50

Pressure limitation

NS 63:	Steady:	3/4 x full scale value
	Fluctuating:	2/3 x full scale value
	Short time:	Full scale value
NS 100, 160:	Steady:	Full scale value
	Fluctuating:	0.9 x full scale value
	Short time:	1.3 x full scale value

Permissible temperature
Ambient: -40 ... +60 °C without liquid filling
-20 ... +60 °C gauges with glycerine filling 1)
Medium: +200 °C maximum without liquid filling
+100 °C maximum with liquid filling 1)

Temperature effect
When the temperature of the measuring system deviates from the reference temperature (+20 °C):
max. ±0.4 %/10 K of full scale value

Ingress protection
IP65 per EN 60529 / IEC 60529

WIKA data sheet PM 02.02 · 03/2017 Page 1 of 4

Data sheets showing similar products:
Stainless steel, safety version; model 232.30; see data sheet PM 02.04

WIKA Part of your business

Standard version

Process connection
Stainless steel 316L (NS 63: 1.4571),
Lower mount (LM) or lower back mount (LBM), NS 63 centre back mount (CBM)
NS 63: G ¼ B (male), 14 mm flats
NS 100, 160: G ½ B, 22 mm flats

Pressure element
Stainless steel 316L
C-type or helical type

Movement
Stainless steel

Dial
Aluminium, white, black lettering,
NS 63 with pointer stop pin

Pointer
Aluminium, black

Case
Stainless steel, with pressure relief at case circumference, 12 o'clock (NS 63) and on the back of the case (NS 100 and 160),
Scale ranges ≤ 0 ... 16 bar with compensating valve to vent case

Window
Laminated safety glass
(NS 63: Polycarbonate)

Ring
Cam ring (bayonet type), stainless steel

Filling liquid (for model 233.50)
Glycerine 99.7 %
(Glyzerine 86.5 % for scale range ≤ 0 ... 2.5 bar)

Options

- Other process connection
- Sealings (model 910.17, see data sheet AC 09.08)
- Assembly on diaphragm seals see product review DS
- Measuring system Monel (model 26x.50, not with NS 160 back mount connection)
- Surface or panel mounting flange, stainless steel
- Panel mounting flange, polished stainless steel
- Triangular bezel, polished stainless steel, with clamp
- Ambient temperatures -40 °C: Silicone oil filling
- Limit indicator at NS 100 and 160, see data sheet SP 09.03
- Pressure gauge with switch contacts, see model PGS23.1x0, data sheet PV 22.02
- Pressure gauge with electrical output signal, see model PGT23.100/160, data sheet PV 12.04

Special versions

Gauges for ammonia plants (NS 100 and 160)
With temperature scale for refrigerant R 717 (NH_3) in °C,
Scale ranges: -1 ... 0 ... 15 bar or -1 ... 0 ... 26 bar

Approvals

Logo	Description	Country
CE Ex	**EU declaration of conformity** ■ Pressure equipment directive PS > 200 bar, module A, pressure accessory ■ ATEX directive (option) Ignition protection type “c” - constructive safety	European Union
EAC Ex	**EAC (option)** ■ Pressure equipment directive ■ Hazardous areas	Eurasian Economic Community
	GOST (option) Metrology, measurement technology	Russia
	KazInMetr (option) Metrology, measurement technology	Kazakhstan
-	**MTSCHS (option)** Permission for commissioning	Kazakhstan
	BelGIM (option) Metrology, measurement technology	Belarus
	UkrSEPRO (option) Metrology, measurement technology	Ukraine
	Uzstandard (option) Metrology, measurement technology	Uzbekistan
-	**CPA (option)** Metrology, measurement technology	China
KCs	**KCs KOSHA (option)** Hazardous areas	South Korea
GL	**GL (option)** Ships, shipbuilding (e.g. offshore)	International
-	**CRN** Safety (e.g. electr. safety, overpressure, ...)	Canada

Certificates (option)

- 2.2 test report
- 3.1 inspection certificate

Approvals and certificates, see website

Dimensions in mm

Standard version

Lower mount (LM)

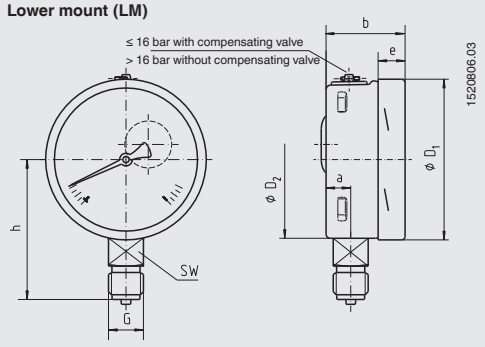

NS 63, centre back mount (CBM)

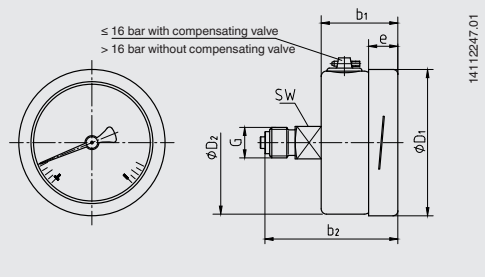

NS 100, 160, lower back mount (LBM)

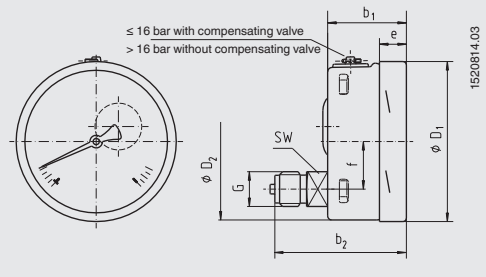

NS	Dimensions in mm											Weight in kg	
	a	b	b_1	b_2	D_1	D_2	e	f	G	h ±1	SW	Model 232.50	Model 233.50
63	9.5	33	33	57	63	62	11.5	-	G ¼ B	54	14	0.16	0.20
100	15.5	49.5	49.5	83	101	99	17.5	30	G ½ B	87	22	0.60	0.90
160	15.5	49.5 2)	49.5 2)	83 1)	161	159	17.5	50	G ½ B	118	22	1.10	2.00

Process connection per EN 837-1 / 7.3

1) Plus 16 mm with scale ranges ≥ 100 bar
2) Plus 16 mm with scale range 1,600 bar

Ordering information

Model / Nominal size / Scale range / Connection size / Connection location / Options

© 2000 WIKA Alexander Wiegand SE & Co. KG, all rights reserved.
The specifications given in this document represent the state of engineering at the time of publishing.
We reserve the right to make modifications to the specifications and materials.

03/2017 DE

WIKA Alexander Wiegand SE & Co. KG
Alexander-Wiegand-Straße 30
63911 Klingenberg/Germany
Tel. +49 9372 132-0
Fax +49 9372 132-406
info@wika.de
www.wika.de

A.5.2 Declaration of Conformity

WIKA

EU-Konformitätserklärung
EU Declaration of Conformity

Dokument Nr.:
Document No.: 14003729.03

Wir erklären in alleiniger Verantwortung, dass die mit CE gekennzeichneten Produkte
We declare under our sole responsibility that the CE marked products

Typenbezeichnung:
Type Designation: **23X.50 / 26X.50 / 23X.30 / 26X.30 / 232.35 / 233.53 / PG23LT / PG23CP**

Beschreibung:
Description: **Rohrfederdruckmessgerät**
Bourdon tube pressure gauge

gemäß gültigem Datenblatt:
according to the valid data sheet:

PM 02.02
PM.02.04
PM 02.11
PM 02.12
PM 02.22
PM 02.24

die grundlegenden Schutzanforderungen der folgenden Richtlinien erfüllen:
comply with the essential protection requirements of the directives:

Harmonisierte Normen:
Harmonized standards:

2014/68/EU Druckgeräterichtlinie (DGRL) (1)
2014/68/EU Pressure Equipment Directive (PED) (1)

(1) PS > 200 bar: Modul A, interne Fertigungskontrolle
PS > 200 bar: Module A, internal control of production

Unterzeichnet für und im Namen von / *Signed for and on behalf of*

WIKA Alexander Wiegand SE & Co. KG

Klingenberg, 2016-11-28

Thorsten Seefried, Vice President
Process Gauges

i.V.
Michael Glombitza, Head of Quality Management
Process Gauges

WIKA Alexander Wiegand SE & Co. KG
Alexander-Wiegand-Straße 30
63911 Klingenberg
Germany

Tel. +49 9372 132-0
Fax +49 9372 132-406
E-Mail info@wika.de
www.wika.de

Kommanditgesellschaft: Sitz Klingenberg – Amtsgericht Aschaffenburg HRA 1819
Komplementärin: WIKA Verwaltungs SE & Co. KG – Sitz Klingenberg – Amtsgericht Aschaffenburg HRA 4685

Komplementärin:
WIKA International SE - Sitz Klingenberg - Amtsgericht Aschaffenburg HRB 10505
Vorstand: Alexander Wiegand
Vorsitzender des Aufsichtsrats: Dr. Max Egli

WIKA

Déclaration de Conformité UE
Declaración de Conformidad UE

Document No.:
Documento Nº: 14003729.03

Nous déclarons sous notre seule responsabilité que les appareils marqués CE
Declaramos bajo nuestra sola responsabilidad, que los equipos marcados CE

Type:
Modelo: **23X.50 / 26X.50 / 23X.30 / 26X.30 / 232.35 / 233.53 / PG23LT / PG23CP**

Description:
Descripción: **Manomètre à tube manométrique**
Manómetro de muelle tubular

selon fiche technique valide:
según ficha técnica en vigor:

PM 02.02
PM.02.04
PM 02.11
PM 02.12
PM 02.22
PM 02.24

conformes aux exigences essentielles de sécurité de la (les) directive(s):
cumplen con los requerimientos esenciales de seguridad de las Directivas:

Normes appliquées et harmonisées
Normas aplicadas y armonizadas

2014/68/UE Équipements sous pression (DEP) (1)
2014/68/UE Equipos a presión (DEP) (1)

(1) PS > 200 bar: Module A, le contrôle interne de la production
PS > 200 bar: Módulo A, el control interno de la producción

Signé a l'intention et au nom de / *Firmado en nombre y por cuenta de*

WIKA Alexander Wiegand SE & Co. KG

Klingenberg, 2016-11-28

Thorsten Seefried, Vice President
Process Gauges

i.V.
Michael Glombitza, Head of Quality Management
Process Gauges

WIKA Alexander Wiegand SE & Co. KG
Alexander-Wiegand-Straße 30
63911 Klingenberg
Germany

Tel. +49 9372 132-0
Fax +49 9372 132-406
E-Mail info@wika.de
www.wika.de

Kommanditgesellschaft: Sitz Klingenberg – Amtsgericht Aschaffenburg HRA 1819
Komplementärin: WIKA Verwaltungs SE & Co. KG – Sitz Klingenberg – Amtsgericht Aschaffenburg HRA 4685

Komplementärin:
WIKA International SE - Sitz Klingenberg - Amtsgericht Aschaffenburg HRB 10505
Vorstand: Alexander Wiegand
Vorsitzender des Aufsichtsrats: Dr. Max Egli

WIKA

Deklaracja zgodności UE

Dokument nr: 14003729.03

Oświadczamy na własną odpowiedzialność, że produkty oznaczone znakiem CE

Model: **23X.50 / 26X.50 / 23X.30 / 26X.30 / 232.35 / 233.53 / PG23LT / PG23CP**

Opis: **Manometr z rurką Bourdona**

zgodnie z obowiązującą kartą katalogową PM 02.02
PM.02.04
PM 02.11
PM 02.12
PM 02.22
PM 02.24

spełniają podstawowe wymagania dyrektyw(-y) : Zastosowano normy zharmonizowane

2014/68/UE Urządzenia ciśnieniowe (PED) (1)

(1) PS > 200 bar: Moduł A, wewnętrzna kontrola produkcji

Podpisano w imieniu firmy

WIKA Alexander Wiegand SE & Co. KG

Klingenberg, 2016-11-28

Thorsten Seefried, Vice President
Process Gauges

i.V.
Michael Glombitza, Head of Quality Management
Process Gauges

WIKA Alexander Wiegand SE & Co. KG
Alexander-Wiegand-Straße 30
63911 Klingenberg
Germany

Tel. +49 9372 132-0
Fax +49 9372 132-406
E-Mail info@wika.de
www.wika.de

Kommanditgesellschaft: Sitz Klingenberg – Amtsgericht Aschaffenburg HRA 1819
Komplementärin: WIKA Verwaltungs SE & Co. KG – Sitz Klingenberg – Amtsgericht Aschaffenburg HRA 4685

Komplementärin:
WIKA International SE - Sitz Klingenberg - Amtsgericht Aschaffenburg HRB 10505
Vorstand: Alexander Wiegand
Vorsitzender des Aufsichtsrats: Dr. Max Egli

A.6 Resistance thermometer

Name	Data
Designation	*Resistance thermometer*
Type	Omnigrad M TR 10
Number	
Type of manual	*Technical documentation*
Manufacturer	Endress & Hauser AG

Place of installation	TAG No. AERZEN	Link
Blower oil system	3.2.3.X31	
Gearbox oil system 50 L	3.2.3.X51	linktarget doesn't exist but @y.link.required='true'
Gearbox oil system 100 L	3.2.3.X51	

A.6.1 Technical documentation

Level Pressure Flow Temperature Liquid Analysis Registration Systems Components Services Solutions

Technical Information

Omnigrad M TR10

Modular RTD assembly
thermowell and neck tube, thread

Application

- Universal range of application
- Measuring range: -200...600 °C (-328...1112 °F)
- Pressure range up to 75 bar (1088 psi)
- Degree of protection: up to IP 68
- Vibration-resistant sensor elements up to 60g

Head transmitters

All Endress+Hauser transmitters are available with enhanced accuracy and reliability compared to directly wired sensors. Easy customizing by choosing one of the following outputs and communication protocols:

- Analog output 4...20 mA
- HART®
- PROFIBUS® PA
- FOUNDATION Fieldbus™

Your benefits

- High flexibility due to modular assembly with standard terminal heads and customized immersion length
- Highest possible compatibility with a design according to DIN 43772
- Neck tube for heat protection of head transmitter
- Fast response time with reduced/tapered tip form
- Types of protection for use in hazardous locations:
  Intrinsic Safety (Ex ia)
  Non-Sparking (Ex nA)

TI00256T/09/en
71158401

Endress+Hauser
People for Process Automation

Function and system design

Measuring principle

These resistance thermometers use a Pt100 temperature sensor according to IEC 60751. This temperature sensor is a temperature-sensitive platinum resistor with a resistance of 100 Ω at 0 °C (32 °F) and a temperature coefficient $\alpha = 0.003851\ °C^{-1}$.

There are generally two different kinds of platinum resistance thermometers:

- **Wire wound (WW)**: Here, a double coil of fine, high-purity platinum wire is located in a ceramic support. This is then sealed top and bottom with a ceramic protective layer. Such resistance thermometers not only facilitate very reproducible measurements but also offer good long-term stability of the resistance/temperature characteristic within temperature ranges up to 600 °C (1112 °F). This type of sensor is relatively large in size and it is comparatively sensitive to vibrations.
- **Thin film platinum resistance thermometers (TF):** A very thin, ultrapure platinum layer, approx. 1 µm thick, is vaporized in a vacuum on a ceramic substrate and then structured photolithographically. The platinum conductor paths formed in this way create the measuring resistance. Additional covering and passivation layers are applied and reliably protect the thin platinum layer from contamination and oxidation even at high temperatures.

The primary advantages of thin-film temperature sensors over wire wound versions are their smaller sizes and better vibration resistance. A relatively low principle-based deviation of the resistance/temperature characteristic from the standard characteristic of IEC 60751 can frequently be observed among TF sensors at high temperatures. As a result, the tight limit values of tolerance category A as per IEC 60751 can only be observed with TF sensors at temperatures up to approx. 300 °C (572 °F). For this reason, thin-film sensors are generally only used for temperature measurements in ranges below 400 °C (932 °F).

Measuring system

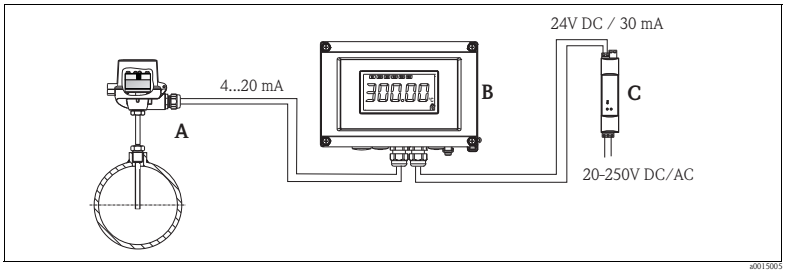

Example of an application

A Thermometer with fitted head transmitter

B RIA16 field display unit
- The display unit records the analog measuring signal from the head transmitter and shows this on the display. The LC display shows the current measured value in digital form and as a bar graph indicating a limit value violation. The display unit is looped into the 4 to 20 mA circuit and gets the required energy from there. More information on this can be found in the Technical Information (see "Documentation").

C Active barrier RN221N
- The RN221N active barrier (24 V DC, 30 mA) has an galvanically isolated output for supplying voltage to loop powered transmitters. The universal power supply works with an input supply voltage of 20 to 250 V DC/AC, 50/60 Hz, which means that it can be used in all international power grids. More information on this can be found in the Technical Information (see "Documentation").

TR10

Equipment architecture

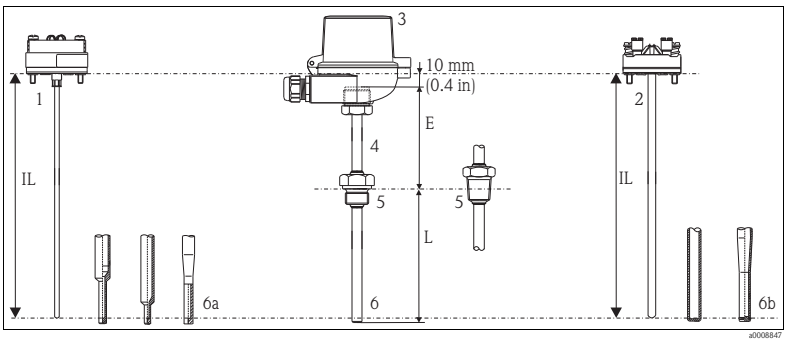

Equipment architecture of the Omnigrad M TR10

1	Insert (∅ 3 mm, 0.12 in) with mounted head transmitter, for example	6	Various tip shapes – detailed information see chapter 'tip shape':
2	Insert (∅ 6 mm, 0.24 in) with mounted ceramic terminal block, for example	6a	Reduced or tapered for inserts with ∅ 3 mm (0.12 in)
3	Terminal head	6b	Straight or tapered for inserts with ∅ 6 mm (0.24 in)
4	Protection armature	E	Neck tube
5	Threads as process connection	L	Immersion length
		IL	Insertion length = E + L + 10 mm (0.4 in)

The Omnigrad M TR10 RTD assemblies are modular. The terminal head serves as a connection module for the protection armature in the process as well as for the mechanical and electrical connection of the measuring insert. The actual RTD sensor element is fitted in and mechanically protected within the insert. The insert can be exchanged and calibrated even during the process. Either ceramic terminal blocks or transmitters can be fitted to the internal base washer. Where required, threads or compression fittings can be fixed onto the protection armature.

Measurement range

-200...+600 °C (-328...+1112 °F)

Performance characteristics

Operating conditions

Ambient temperature

Terminal head	Temperature in °C (°F)
Without mounted head transmitter	Depends on the terminal head used and the cable gland or fieldbus connector, see 'Terminal heads' section, → 🗎 11
With mounted head transmitter	-40 to 85 °C (-40 to 185 °F)
With mounted head transmitter and display	-20 to 70 °C (-4 to 158 °F)

Process pressure

The pressure values to which the actual thermowell can be subjected at the various temperatures and maximum permitted flow velocity are illustrated by the figure below. Occasionally, the pressure loading capacity of the process connection can be considerably lower. The maximum allowable process pressure for a specific thermometer is derived from the lower pressure value of the thermowell and process connection.

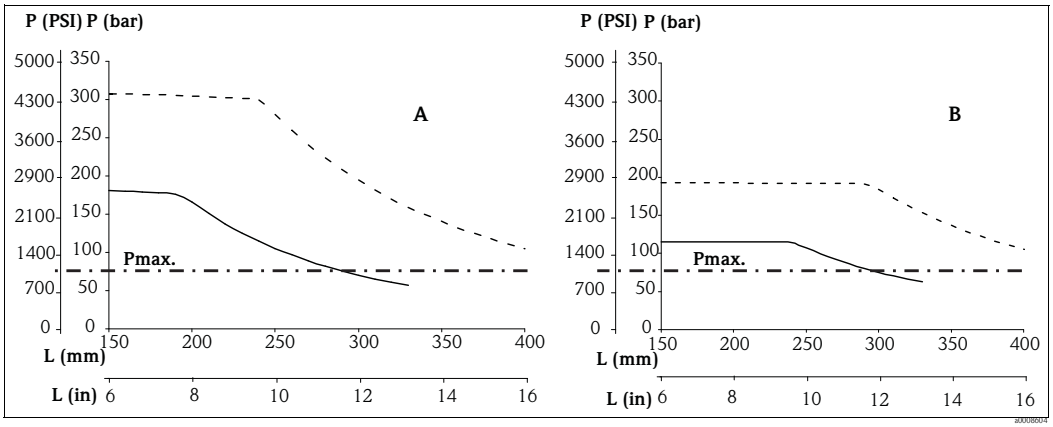

Maximum permitted process pressure for tube diameter, limited to 75 bar (1088 psi) by the threaded process connection
– Thermowell diameter 9 x 1 mm (0.35 in) ————
– PThermowell diameter 12 x 2.5 mm (0.47 in) - - - - - -

A	Medium water at T = 50 °C (122 °F)	P	Process pressure
B	Medium superheated steam at T = 400 °C (752 °F)	$P_{max.}$	Maximum permitted process pressure, limited by the process connection
L	Immersion length		

Permitted flow velocity depending on the immersion length

The highest flow velocity tolerated by the thermometer diminishes with increasing immersion length exposed to the stream of the fluid. In addition it is dependent on the diameter of the thermometer tip, on the kind of measuring medium, on the process temperature and on the process pressure. The following figures exemplify the maximum permitted flow velocities in water and superheated steam at a process pressure of 5 MPa (50 bar).

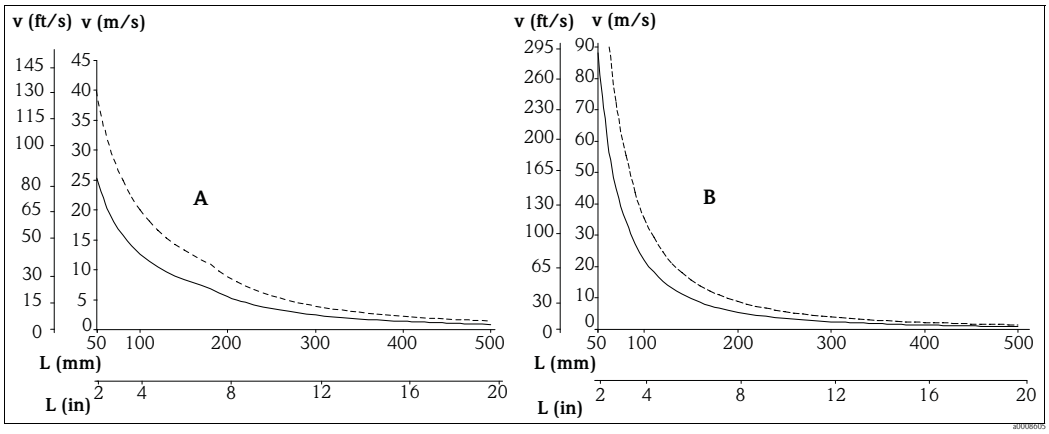

Maximum flow velocity with:
– Thermowell diameter 9 x 1 mm (0.35 in) ————
– Thermowell diameter 12 x 2.5 mm (0.47 in) - - - - - -

A	Medium water at T = 50 °C (122 °F)	L	Immersion length
B	Medium superheated steam at T = 400 °C (752 °F)	v	Flow velocity

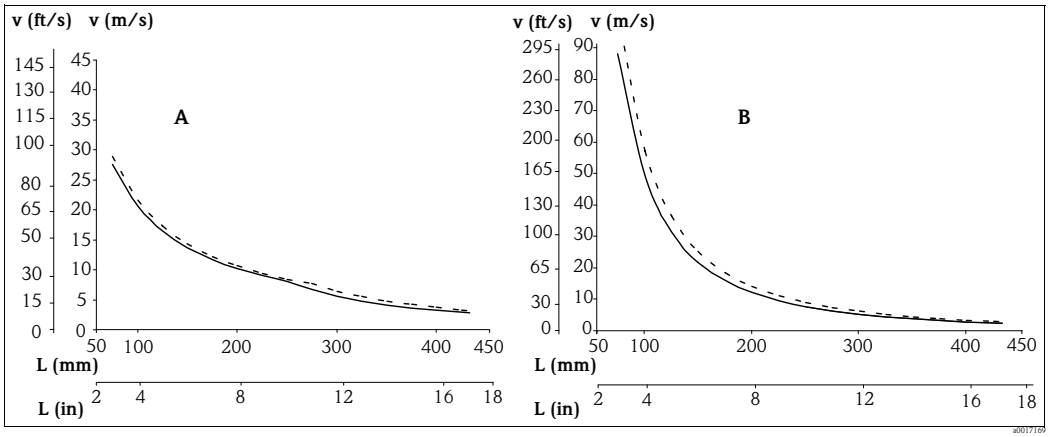

Maximum flow velocity with:
– Thermowell diameter 14 x 2 mm (0.55 in) ————
– Thermowell diameter 15 x 2 mm (0.6 in) - - - - - -

A	Medium water at T = 50 °C (122 °F)	L	Immersion length
B	Medium superheated steam at T = 400 °C (752 °F)	v	Flow velocity

Shock and vibration resistance

The Endress+Hauser inserts exceed the IEC 60751 requirements stating a shock and vibration resistance of 3g within a range of 10...500 Hz.
The vibration resistance of the measurement point depends on sensor type and construction. Refer to the following table:

Sensor type	Vibration resistance
▪ Pt100 (WW) ▪ Pt100 (TF), increased vibration resistance ▪ iTHERM® StrongSens Pt100 (TF)	▪ 30 m/s² (3g) ▪ 40 m/s² (4g) ▪ 600 m/s² (60g) for the sensor tip

Accuracy RTD corresponding to IEC 60751

Class	max. Tolerances (°C)	Temperature range	Characteristics
RTD max. error type TF - range: -50...+500 °C			
Cl. AA, former 1/3 Cl. B	± (0.1 + 0.0017 · |t|[1])	0...+150 °C	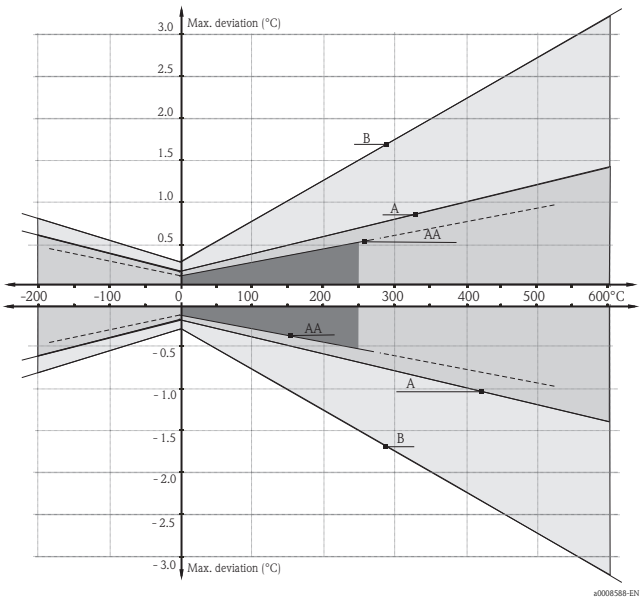
Cl. A	± (0.15 + 0.002 · |t|[1])	-30...+300 °C	
Cl. B	± (0.3 + 0.005 · |t|[1])	-50...+500 °C	
RTD max. error type WW - range: -196...+600 °C			
Cl. AA, former 1/3 Cl. B	± (0.1 + 0.0017 · |t|[1])	-50...+250 °C	
Cl. A	± (0.15 + 0.002 · |t|[1])	-100...+450 °C	
Cl. B	± (0.3 + 0.005 · |t|[1])	-196...+600 °C	

1) |t| = absolute value °C

For measurement errors in °F, calculate using equations above in °C, then multiply the outcome by 1.8.

Response time

Tests in water at 0.4 m/s (1.3 ft/s), according to IEC 60751; 10 K temperature step change. Measuring probe Pt100, TF/WW:

Thermowell				
Diameter	**Response time**	**Reduced tip ∅ 5.3 mm (0.2 in)**	**Tapered tip ∅ 6.6 mm (0.26 in) or ∅ 9 mm (0.35 in)**	**Straight tip**
9 x 1 mm (0.35 in)	t_{50} t_{90}	7.5 s 21 s	11 s 37 s	18 s 55 s
11 x 2 mm (0.43 in)	t_{50} t_{90}	7.5 s 21 s	not available not available	18 s 55 s
12 x 2.5 mm (0.47 in)	t_{50} t_{90}	not available not available	11 s 37 s	38 s 125 s
14 x 2 mm (0.55 in)	t_{50} t_{90}	not available not available	not available not available	21 s 61 s
15 x 2 mm (0.6 in)	t_{50} t_{90}	not available not available	not available not available	22 s 110 s

Response time for the sensor assembly without transmitter.

Insulation resistance

Insulation resistance ≥100 MΩ at ambient temperature.
Insulation resistance between each terminal and the sheath is measured with a voltage of 100 V DC.

Self heating

RTD elements are passive resistances that are measured using an external current. This measurement current causes a self heating in the RTD element itself which in turn creates an additional measurement error. In addition to the measurement current the size of the measurement error is also affected by the temperature conductivity and flow velocity of the process. This self heating error is negligible when an Endress+Hauser iTEMP® temperature transmitter (very small measurement current) is connected.

Calibration specifications

Endress+Hauser provides comparison temperature calibration from –80 to +600 °C (-110 °F to 1112 °F) based on the International Temperature Scale (ITS90). Calibrations are traceable to national and international standards. The calibration report is referenced to the serial number of the thermometer. Only the measurement insert is calibrated.

Insert-Ø: 6 mm (0.24 in) and 3 mm (0.12 in)	**Minimum insertion length IL in mm (in)**	
Temperature range	**without head transmitter**	**with head transmitter**
-80 °C to -40 °C (-110 °F to -40 °F)	200 (7.87)	
-40 °C to 0 °C (-40 °F to 32 °F)	160 (6.3)	
0 °C to 250 °C (32 °F to 480 °F)	120 (4.72)	150 (5.9)
250 °C to 550 °C (480 °F to 1020 °F)	300 (11.81)	
550 °C to 650 °C (1020 °F to 1202 °F)	400 (15.75)	

Material

Extension neck, thermowell and measuring insert.
The temperatures for continuous operation specified in the following table are only intended as reference values for use of the various materials in air and without any significant compressive load. The maximum operation temperatures are reduced considerably in some cases where abnormal conditions such as high mechanical load occur or in aggressive media.

Material name	Short form	Recommended max. temperature for continuous use in air	Properties
AISI 316L/ 1.4404 1.4435	 X2CrNiMo17-12-2 X2CrNiMo18-14-3	650 °C (1200 °F)[1]	▪ Austenitic, stainless steel ▪ High corrosion resistance in general ▪ Particularly high corrosion resistance in chlorine-based and acidic, non-oxidizing atmospheres through the addition of molybdenum (e.g. phosphoric and sulfuric acids, acetic and tartaric acids with a low concentration) ▪ Increased resistance to intergranular corrosion and pitting ▪ Compared to 1.4404, 1.4435 has even higher corrosion resistance and a lower delta ferrite content
AISI 316Ti/ 1.4571	X6CrNiMoTi17-12-2	700 °C (1292 °F)[1]	▪ Properties comparable to AISI316L ▪ Addition of titanium means increased resistance to intergranular corrosion even after welding ▪ Broad range of uses in the chemical, petrochemical and oil industries as well as in coal chemistry ▪ Can only be polished to a limited extent, titanium streaks can form
Hastelloy® C276/2.4819	NiMo 16 Cr 15 W	1100 °C (2012 °F)	▪ A nickel-based alloy with good resistance to oxidizing and reducing atmospheres, even at high temperatures ▪ Particularly resistant to chlorine gas and chloride as well as to many oxidizing mineral and organic acids

1) Can be used to a limited extent up to 800 °C (1472 °F) for low compressive loads and in non-corrosive media. Please contact your Endress+Hauser sales team for further information.

Transmitter specifications

	iTEMP® TMT180 PCP Pt100	iTEMP® TMT181 PCP	iTEMP® TMT182 HART®	iTEMP® TMT82[1] HART®	iTEMP® TMT84 PA iTEMP® TMT85 FF
Measurement accuracy	0.2 °C (0.36 °F), optional 0.1 °C (0.18 °F) oder 0.08 %	0.2 °C (0.36 °F) or 0.08 %		0.1 °C (0.18 °F)	
	% is related to the adjusted measurement range (the larger value applies)				
Sensor current	I ≤ 0.6 mA		I ≤ 0.2 mA	I ≤ 0.3 mA	
Galvanic isolation (input/output)	–	U = 2 kV AC			

1) Entire accuracy = 0.1 °C (0.18 °F) + 0.03% (D/A-accuracy)

Transmitter long-term stability

≤ 0.1 °C/year (≤ 0.18 °F / year) or ≤ 0.05% / year
Data under reference conditions; % relates to the set span. The larger value applies.

Components

Family of temperature transmitters

Thermometers fitted with iTEMP® transmitters are an installation ready complete solution to improve temperature measurement by increasing accuracy and reliability, when compared to direct wired sensors, as well as reducing both wiring and maintenance costs.

PC programmable head transmitter iTEMP® TMT180 and iTEMP® TMT181

They offer a high degree of flexibility, thereby supporting universal application with low inventory storage. The iTEMP® transmitters can be configured quickly and easily at a PC. Endress+Hauser offers the ReadWin® 2000 configuration software for this purpose. This software can be downloaded free of charge at **www.readwin2000.com**. More information can be found in the Technical Information (see "Documentation" section).

iTEMP® HART® TMT182 head transmitter

HART® communication is all about easy, reliable data access and getting additional information about the measurement point more inexpensively. iTEMP® transmitters integrate seamlessly into your existing control system and provide painless access to numerous diagnostic information.
Configuration with a hand-held (Field Xpert SFX100 or DXR375) or a PC with configuration program (FieldCare, ReadWin® 2000) or configure with AMS or PDM. Details see Technical Information (see chapter 'Documentation').

Type of transmitter	Specification
iTEMP® TMT18x 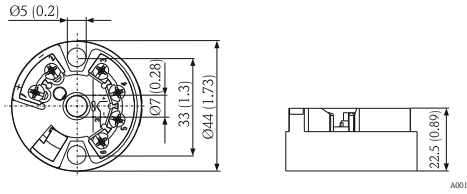 	■ Material: Housing (PC), Potting (PUR) ■ Terminals: Cable up to max. ≤ 2.5 mm² / 16 AWG (secure screws) or with wire end ferrules ■ Eyelets for easy connection of a HART®-handheld terminal with alligator clips ■ Degree of protection NEMA 4 (see also type of terminal head) Details see Technical Information (see chapter 'Documentation')

HART® programmable head transmitter iTEMP® TMT82

The iTEMP® TMT82 is a 2-wire device with two measurement inputs and one analog output. The device transmits both converted signals from resistance thermometers and thermocouples as well as resistance and voltage signals via the HART® communication. It can be installed as an intrinsically safe apparatus in Zone 1 hazardous areas and is used for instrumentation in the flat face terminal head to DIN EN 50446. Fast and easy operation, visualization and maintenance via PC using configuration software such as FieldCare, Simatic PDM or AMS.
Benefits are: Dual sensor input, maximum reliability, accuracy and long-term stability for critical processes, mathematical functions, monitoring of thermometer drift, backup function of the sensor, diagnostic functions of the sensor and sensor-transmitter matching based on the Callendar/Van Dusen coefficient. For more information, refer to the Technical Information (see chapter 'Documentation').

PROFIBUS® PA iTEMP® TMT84 head transmitter

Universally programmable head transmitter with PROFIBUS® PA communication. Converting various input signals into a digital output signal. High accuracy over the complete ambient temperature range. Swift and easy operation, visualization and maintenance using a PC directly from the control panel, e. g. using operating software such as FieldCare, Simatic PDM or AMS.
Benefits are: dual sensor input, highest reliability in harsh industrial environments, mathematic functions, thermometer drift monitoring, sensor back-up functionality, sensor diagnosis functions and sensor-transmitter matching using Callendar-Van Dusen coefficients. Details see Technical Information (see chapter 'Documentation').

FOUNDATION Fieldbus™ iTEMP® TMT85 head transmitter

Universally programmable head transmitter with FOUNDATION Fieldbus™ communication. Converting various input signals into a digital output signal. High accuracy over the complete ambient temperature range. Swift and easy operation, visualization and maintenance using a PC directly from the control panel, e. g. using operating software such as ControlCare from Endress+Hauser or the NI Configurator from National Instruments.
Benefits are: dual sensor input, highest reliability in harsh industrial environments, mathematic functions, thermometer drift monitoring, sensor back-up functionality, sensor diagnosis functions and sensor-transmitter matching using Callendar-Van Dusen coefficients. Details see Technical Information (see chapter 'Documentation').

Type of transmitter	Specification
iTEMP® TMT8x 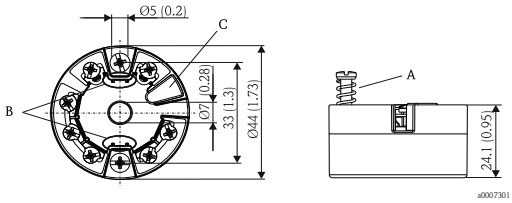 	■ Spring range L ≥ 5 mm (0.2"), see Pos. A ■ Fixing elements for pluggable measured value display, see Pos. B ■ Interface for contacting measured value display, see Pos. C ■ Material (RoHS-compliant) Housing: PC Potting: PU ■ Terminals: Screw terminals (cable up to max. ≤ 2.5 mm^2 / 16 AWG) or spring terminals (e. g. from 0.25 mm^2 to 0.75 mm^2/ 24 AWG to 18 AWG for flexible wires with wire-end ferrules with plastic ferrule) ■ Degree of protection NEMA 4 (see also type of terminal head) Details see Technical Information (see chapter 'Documentation')
Pluggable display TID10 as option 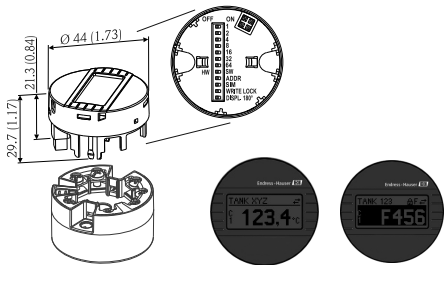 	■ Displays the actual measured value and the measurement point identification ■ Displays fault events in inverse color with channel ident and diagnostics code ■ DIP-switches on the rear for hardware set-up, e. g. PROFIBUS® PA bus address Display is only available with suitable terminal head with display window, e.g. TA30.

TR10

Terminal heads

All terminal heads have an internal shape and size in accordance with DIN EN 50446, flat face and a thermometer connection of M24x1.5. All dimensions in mm (in). The cable glands in the diagrams correspond to M20x1.5 connections. Specifications without head transmitter installed. For ambient temperatures with head transmitter installed, see 'Operating conditions' section.

TA30A	Specification
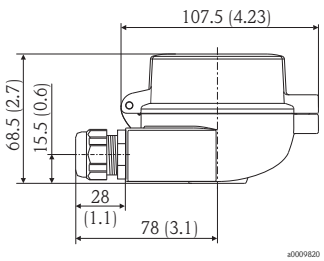	■ Degree of protection: IP66/68 ■ Temperature: -50 °C (-58 °F)...+150 °C (+300 °F), w/o cable gland ■ Material: aluminum, polyester powder coated Seals: silicone ■ Cable entry incl. glands: ½" NPT and M20x1.5, only thread: G ½", plugs: M12x1 PA, 7/8" FF ■ Protection armature connection: M24x1.5 ■ Head color: blue RAL 5012 ■ Cap color: grey RAL 7035 ■ Weight: 330 g (11.64 oz)

TA30A with display window	Specification
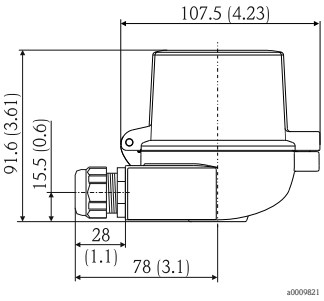	■ Degree of protection: IP66/68 ■ Temperature: -50 °C (-58 °F)...+150 °C (+300 °F), w/o cable gland ■ Material: aluminum, polyester powder coated Seals: silicone ■ Cable entry incl. glands: ½" NPT and M20x1.5, only thread: G ½", plugs: M12x1 PA, 7/8" FF ■ Protection armature connection: M24x1.5 ■ Head color: blue RAL 5012 ■ Cap color: grey RAL 7035 ■ Weight: 420 g (14.81 oz) ■ Head transmitter optional with TID10 display

TA30D	Specification
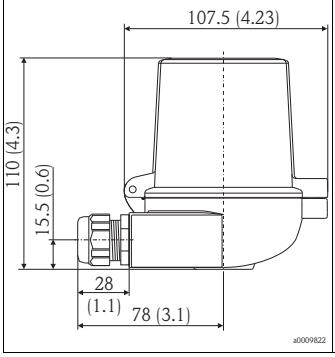	■ Degree of protection: IP66/68 ■ Temperature: -50 °C (-58 °F)...+150 °C (+300 °F), w/o cable gland ■ Material: aluminum, polyester powder coated Seals: silicone ■ Cable entry incl. glands: ½" NPT and M20x1.5, only thread: G ½", plugs: M12x1 PA, 7/8" FF ■ Protection armature connection: M24x1.5 ■ Two head transmitters can be mounted. In the standard version, one transmitter is mounted in the terminal head cover and an additional terminal block is installed directly on the insert. ■ Head color: blue RAL 5012 ■ Cap color: grey RAL 7035 ■ Weight: 390 g (13.75 oz)

TA30P	Specification
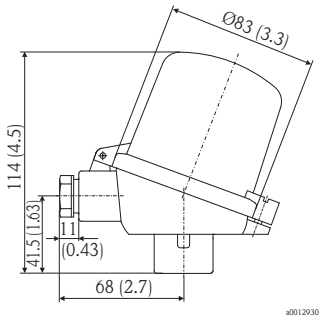	■ Degree of protection: IP65 ■ Temperature: -50 °C (-58 °F)...+120 °C (+248 °F), w/o cable gland ■ Material: polyamide (PA), antistatic Seals: silicone ■ Cable entry: M20x1.5 ■ Head and cap color: black ■ Weight: 135 g (4.8 oz) ■ Types of protection for use in hazardous locations: Intrinsic Safety (Ex ia)

TA20B	Specification
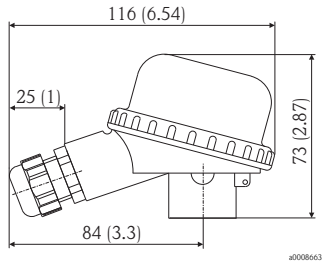	■ Degree of protection: IP65 ■ Temperature: -40 °C (-40 °F)...+80 °C (+176 °F), w/o cable gland ■ Material: polyamide (PA) ■ Cable entry: M20x1.5 ■ Head and cap color: black ■ Weight: 80 g (2.82 oz) ■ 3-A® marked

TA21E	Specification
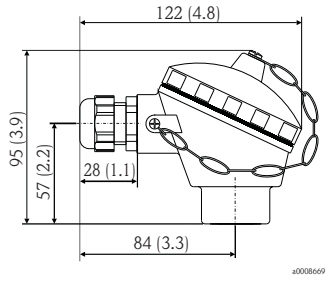	■ Degree of protection: IP65 ■ Temperature: -40 °C (-40 °F)...+130 °C (+266 °F) silicone -40 °C (-40 °F)...100 °C (212 °F) rubber, w/o cable gland ■ Material: aluminum alloy with polyester or epoxy coating; rubber or silicone seal under the cover ■ Cable entry: M20x1.5 or plug M12x1 PA ■ Protection armature connection: M24x1.5, G ½" or NPT ½" ■ Head color: blue RAL 5012 ■ Cap color: grey RAL 7035 ■ Weight: 300 g (10.58 oz) ■ 3-A® marked

TR10

TA20J	Specification
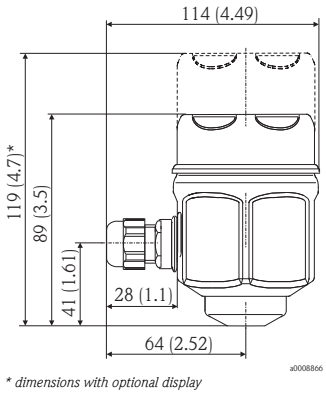 ** dimensions with optional display*	■ Degree of protection: IP66/IP67 ■ Temperature: -40 °C (-40 °F)...+70 °C (+158 °F), w/o cable gland ■ Material: 316L (1.4404) stainless steel, rubber seal under the cover (hygienic design) ■ 4 digits 7-segments LC display (loop powered with 4...20 mA transmitter) ■ Cable entry: M20x1.5 or plug M12x1 PA ■ Protection armature connection: M24x1.5 or ½" NPT ■ Head and cap color: stainless steel, polished ■ Weight: 650 g (22.93 oz) with display ■ Humidity: 25 to 95%, no condensation ■ 3-A® marked The programming is executed through 3 keys at the bottom of the display.

TA20R	Specification
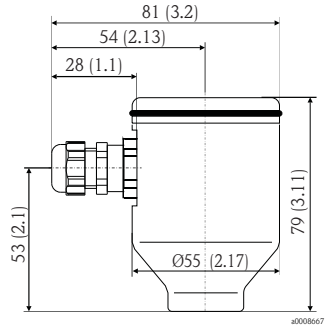	■ Degree of protection: IP66/67 ■ Temperature: -40 °C (-40 °F)...+100 °C (+212 °F), w/o cable gland ■ Material: SS 316L (1.4404) stainless steel ■ Cable entry: M20x1.5 or plug M12x1 PA ■ Head and cap color: stainless steel ■ Weight: 550 g (19.4 oz) ■ LABS - free 3-A® marked

Maximum ambient temperatures for cable glands and fieldbus connectors	
Type	**Temperature range**
Cable gland ½" NPT, M20x1.5 (non Ex)	-40 to +100 °C (-40 to +212 °F)
Cable gland M20x1.5 (for dust ignition-proof area)	-20 to +95 °C (-4 to +203 °F)
Fieldbus connector (M12x1 PA, 7/8" FF)	-40 to +105 °C (-40 to +221 °F)

Design, dimensions

All dimensions in mm (in).

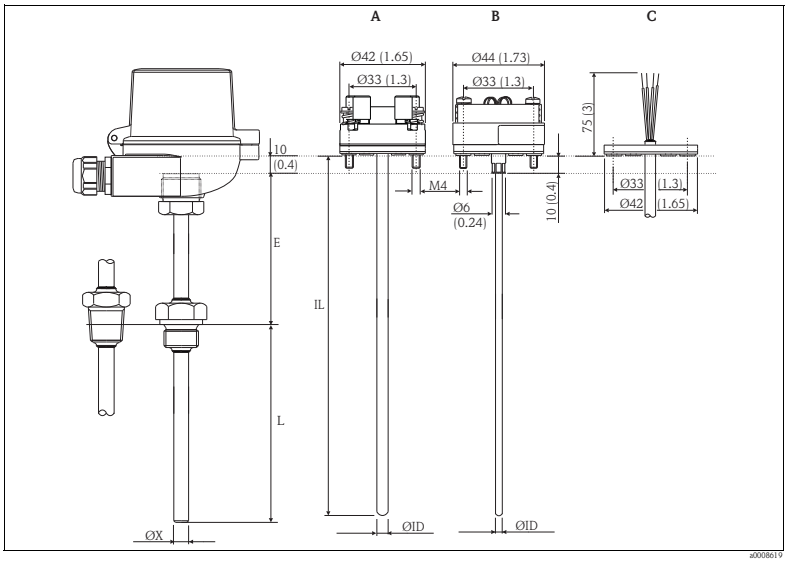

Dimensions of the Omnigrad M TR10

A	Insert with terminal block mounted	Ø ID	Insert diameter
B	Insert with head transmitter mounted	IL	Insertion length = E + L + 10 mm (0.4 in)
C	Insert with flying leads	L	Immersion length
E	Neck tube length	Ø X	Thermowell diameter

Tip shape

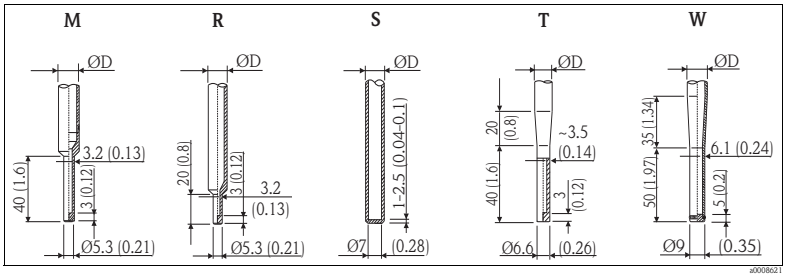

Available versions of thermowell tips (reduced, straight, tapered). Maximum surface roughness ≤ Ra 0.8 µm (31.5 µin)

Pos.	Tip shape, L = Immersion length	Insert diameter	Outer diameter ∅D
M	Reduced, L ≥ 70 mm (2.76 in)	∅3 mm (0.12 in)	9 mm (0.35 in), 11 mm (0.43 in)
R	Reduced, L ≥ 50 mm (1.97 in)[1)]	∅3 mm (0.12 in)	9 mm (0.35 in)
S	Straight	∅6 mm (0.24 in)	9 mm (0.35 in), 11 mm (0.43 in), 12 mm (0.47 in), 14 mm (0.55 in), 15 mm (0.59 in)
T	Tapered, L ≥ 90 mm (3.54 in)[1)]	∅3 mm (0.12 in)	9 mm (0.35 in)
W	Tapered DIN43772-3G, L ≥ 115 mm (4.53 in)	∅6 mm (0.24 in)	12 mm (0,47 in)

1) not with material Hastelloy® C276/2.4819

TR10

Insert

Depending on the application there are different inserts available for the assembly:

Selection in order code (Pos. RTD; wire; meas. range; class: validity:)	A	B	C	F	G	2	3	6	7	S	T	U	V
Sensor design; wiring type	1x Pt100 WW; 3-wire	2x Pt100 WW; 3-wire	1x Pt100 WW; 4-wire	2x Pt100 WW; 3-wire	1x Pt100 WW; 4-wire	1x Pt100 TF; 3-wire	1x Pt100 TF; 4-wire	1x Pt100 TF; 3-wire	1x Pt100 TF; 4-wire	1x Pt100 TF; 3-wire	1x Pt100 TF; 4-wire	1x Pt100 TF; 3-wire	1x Pt100 TF; 4-wire
Vibration resistance for the tip of the insert	Vibration resistance up to 3g					Increased vibration resistance up to 4g				iTHERM® StrongSens® vibration-resistant up to 60g			
Measuring range; accuracy class with temperature range	-200...600 °C; cl. A, -200...600 °C			-200...600 °C; cl. AA, 0...250 °C		-50...400 °C; cl. A, -50...250 °C		-50...400 °C; cl. AA, 0...150 °C		-50...500 °C; cl. A, -30...300 °C		-50...500 °C; cl. AA, 0...200 °C	
Insert type	TPR100									iTHERM® TS111			
Diameter	Ø3 mm (0.12 in) or Ø6 mm (0.24 in), depending on selected tip shape									Ø6 mm (0.24 in)			

Weight

From 0.5 to 2.5 kg (1 to 5.5 lbs) for standard options.

Process connection

Threaded process connection		Version		Thread length TL in mm (in)	Width across flats SW/AF
Cylindrical (version M, G)	Conical (version NPT, R)	M	M20x1.5	14 (0.55)	27
		G	G½" DIN / BSP	15 (0.6)	27
			G1" DIN / BSP	18 (0.71)	41
			G¾" BSP	15 (0.6)	32
		NPT	NPT ½"	8 (0.32)	22
			NPT ¾"	8,5 (0.33)	27
		R	R ¾" JIS B 0203	8 (0.32)	27
			R ½" JIS B 0203		22

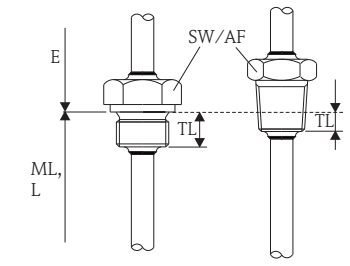

E = Length of extended neck
ML, L = Insertion length, immersion length

Spare parts

- A thermowell is available as spare part TW10 (see Technical Information in chapter 'Documentation').
- The RTD insert is available as spare part TPR100 or iTHERM® TS111 (see Technical Information in chapter 'Documentation').

If inserts are required as spare parts refer to the following equation:
Insertion length IL = E + L + 10 mm (0.4 in)

Spare part	Material-No.
Gasket M21-G½", copper	60001328
Gasket M27-G¾", copper	60001344
Gasket M33-G1", copper	60001346
Gasket set M24x1.5, aramid+NBR (10 pieces)	60001329

Wiring

Wiring diagrams

Type of sensor connection

Head mounted transmitter TMT18x (single input)

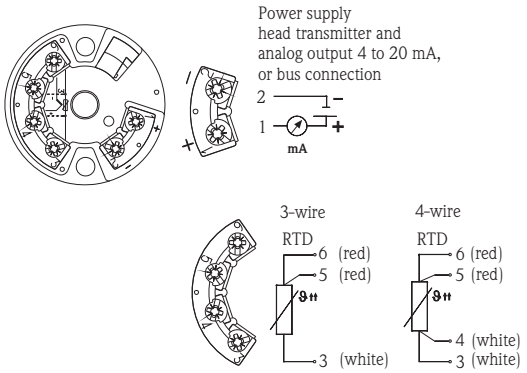

Head mounted transmitter TMT8x (dual input)

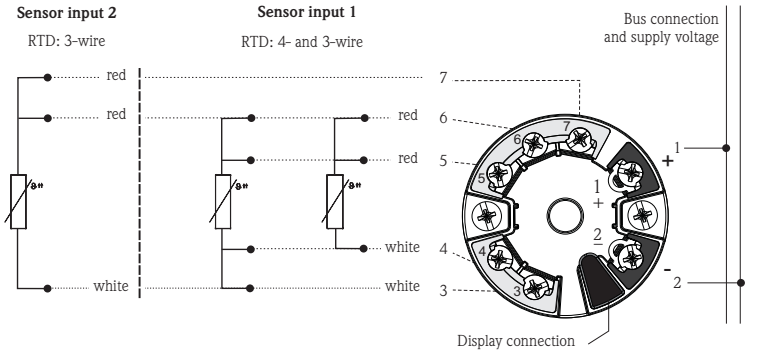

Terminal block mounted

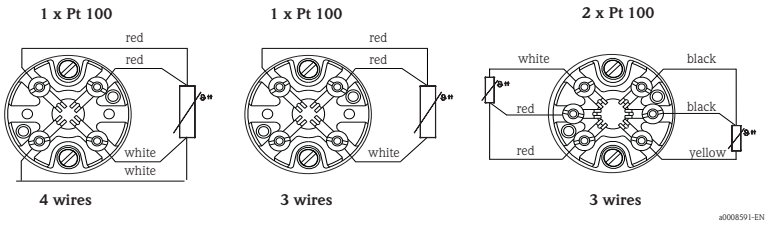

Installation conditions

Orientation

No restrictions.

Installation instructions

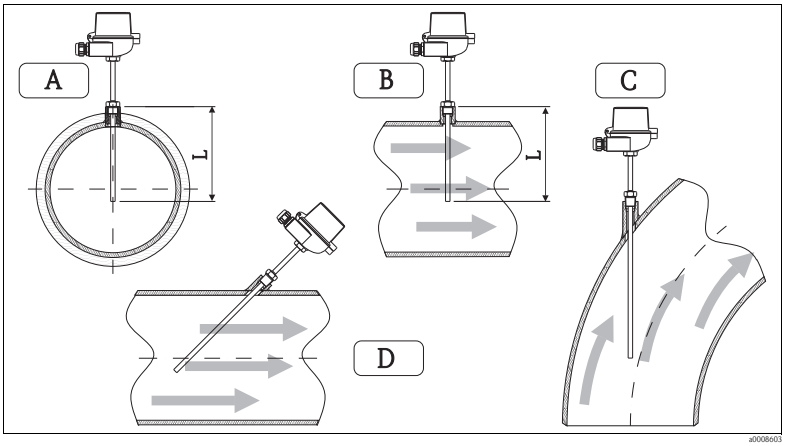

Installation examples

A - B: In pipes with a small cross section the sensor tip should reach or extend slightly past the center line of the pipe (= L).
C - D: Tilted installation.

The immersion length of the thermometer influences the accuracy. If the immersion length is too small then errors in the measurement are caused by heat conduction via the process connection and the container wall. If installing into a pipe then the immersion length should be half of the pipe diameter, if possible (see A and B). A further solution could be an angled (tilted) installation (see C and D). When determining the immersion length all thermometer parameters and the process to be measured must be taken into account (e.g. flow velocity, process pressure).

- Installation possibilities: Pipes, tanks or other plant components
- Recommended minimum immersion length = 80... 100 mm (3.15... 3.94 in)
  The immersion length should correspond to at least 8 times of the thermowell diameter. Example: Thermowell diameter 12 mm (0.47 in) x 8 = 96 mm (3.8 in). A standard immersion length of 120 mm (4.72 in) is recommended
- ATEX certification: Always take note of the installation regulations!

Neck tube length

The neck tube is the part between the process connection and the housing.
As illustrated in the following figure, the neck tube length may influence the temperature in the terminal head. It is necessary that this temperature is kept within the limit values defined in the chapter "Operating conditions".

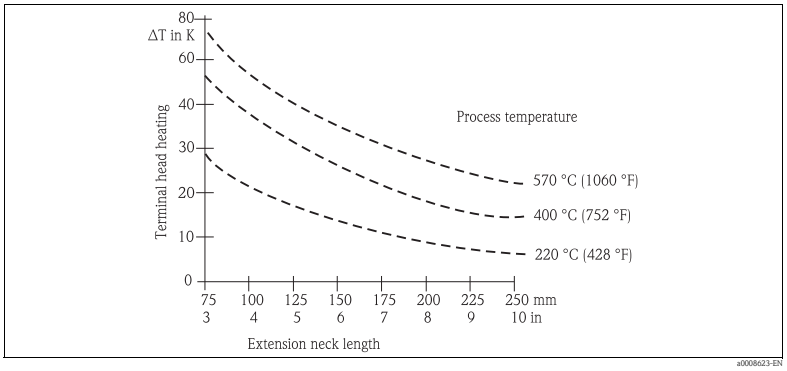

Heating of the terminal head consequent to the process temperature.
Temperature in terminal head = ambient temperature 20 °C (68 °F) + ΔT

Certificates and approvals

CE Mark

The device meets the legal requirements of the EC directives if applicable. Endress+Hauser confirms that the device has been successfully tested by applying the CE mark.

Hazardous area approvals

For further details on the available Ex versions (ATEX, CSA, FM, etc.), please contact your nearest Endress+Hauser sales organization. All relevant data for hazardous areas can be found in separate Ex documentation. If required, please request copies.

Other standards and guidelines

- IEC 60529: Degrees of protection by housing (IP-Code).
- IEC 61010-1: Safety requirements for electrical measurement, control and laboratory instrumentation.
- IEC 60751: Industrial platinum resistance thermometer
- DIN43772: Thermowells
- DIN EN 50446, DIN 47229: Terminal heads
- IEC 61326-1: Electromagnetic compatibility (EMC requirements)

PED approval

The thermometer complies with paragraph 3.3 of the Pressure Equipment Directive (97/23/CE) and is not marked separately.

Material certification

The material certificate 3.1 (according to standard EN 10204) can be directly selected from the sales structure of the product and refers to the parts of the sensor in contact with the process fluid. Other types of certificates related to materials can be requested separately. The "short form" certificate includes a simplified declaration with no enclosures of documents related to the materials used in the construction of the single sensor and guarantees the traceability of the materials through the identification number of the thermometer. The data related to the origin of the materials can subsequently be requested by the client if necessary.

Test on thermowell

Thermowell pressure tests are carried out in accordance with the specifications in the DIN 43772 standard. With regards to thermowells with tapered or reduced tips that do not comply with this standard these are tested using the pressure of corresponding straight thermowells. Sensors certified for use in Ex Zones, are always tested to pressures according to the same criteria. Tests according to other specifications can be carried out on request. Dye penetration tests verify the absence of cracks on the thermowell welding.

Test report and calibration

The "Factory calibration" is carried out according to an internal procedure in a laboratory of Endress+Hauser accredited by the European Accreditation Organization (EA) to ISO/IEC 17025. A calibration which is performed according to EA guidelines (SIT or DKD calibration) may be requested separately. The calibration is

performed on the replaceable insert of the thermometer. In the case of thermometers without a replaceable insert, the entire thermometer – from the process connection to the tip of the thermometer – is calibrated.

Ordering information

Product structure

Detailed ordering information is available from the following sources:
- In the **Product Configurator** on the Endress+Hauser website:
  www.endress.com → Select country → Instruments → Select device → Product page function: Configure this product
- From your Endress+Hauser Sales Center:
  www.endress.com/worldwide

Product Configurator – the tool for individual product configuration:
- Up-to-the-minute configuration data
- Depending on the device: Direct input of measuring point-specific information such as measuring range or operating language
- Automatic verification of exclusion criteria
- Automatic creation of the order code and its breakdown in PDF or Excel output format
- Ability to order directly in the Endress+Hauser Online Shop

Documentation

Technical Information:
- RTD Insert for Temperature Sensor Omniset TPR100 (TI268t/02/en)
- Insert for installation in thermometers iTHERM® TS111 (TI01014t/09/en)
- Thermowell for temperature sensors Omnigrad M TW10 (TI261t/02/en)
- Temperature head transmitter:
  – iTEMP® TMT181, PC programmable, single input, RTD, TC, Ω, mV (TI00070r/09/en)
  – iTEMP® Pt TMT180, PC programmable, single input, Pt100 (TI088r/09/en)
  – iTEMP® TMT182 HART®, single input, RTD, TC, Ω, mV (TI078r/09/en)
  – iTEMP® TMT82 HART®, dual input, RTD, TC, Ω, mV (TI01010r/09/en)
  – iTEMP® TMT84 PROFIBUS® PA, dual input, RTD, TC, Ω, mV (TI00138r/09/en)
  – iTEMP® TMT85 FOUNDATION Fieldbus™, dual input, RTD, TC, Ω, mV (TI00134r/09/en)

Hazardous area supplementary documentation:
- Omnigrad TRxx RTD Thermometer ATEX II1GDor II 1/2GD (XA072r/09/a3)
- Omnigrad TRxx, Omniset TPR100, TET10x, TPC100, TEC10x ATEX II 3GD EEx nA (XA044r/09/a3)

Application example

Technical Information:
- RIA16 field display, loop-powered (TI00144R/09/en)
- Active barrier with power supply RN221N (TI073R/09/en)

Instruments International

Endress+Hauser
Instruments International AG
Kaegenstrasse 2
4153 Reinach
Switzerland

Tel.+41 61 715 81 00
Fax+41 61 715 25 00
www.endress.com
info@ii.endress.com

Endress+Hauser
People for Process Automation

TI00256T/09/en/01.11
71158401
FM9

A.6.2 Safety instructions

XA00072R/09/A3/14.16
71327294

Products Solutions Services

Safety Instructions
Omnigrad TR1x, TR4x, TR88, TR6x, TC1x, TC88, TEC420, TC6x

RTD/TC thermometers

ATEX: II 1D, II 1/2D Ex ia IIIC or II 1G, II 1/2G Ex ia IIC IECEx: Ex ia IIC

DE Dokument: XA00072R
Sicherheitshinweise für elektrische Betriebsmittel für explosionsgefährdete Bereiche gemäß Richtlinie 2014/34/EU (ATEX) → 🗎 5

EN Document: XA00072R
Safety instructions for electrical apparatus for explosion-hazardous areas according to Directive 2014/34/EU (ATEX) → 🗎 13

FR Document: XA00072R
Conseils de sécurité pour matériels électriques destinés aux zones explosibles selon Directive 2014/34/UE (ATEX) → 🗎 21

Endress+Hauser
People for Process Automation

BG - Правила за техниката на безопасност за електрически средства за производство във взривоопасни зони. Ако не разбирате езика на това ръководство има възможност да споръчате при нас едно ръководство, преведено на езика на Вашата страна.
ЕС декларация за съответствие
Производителят Endress+Hauser декларира с това заявление за съответствие и с предявяването на сертификата CE, че този продукт отговаря на изискванията на съответните европейски директиви. Прилаганите директиви, норми и документи са указани в заявлението за съответствие.

CS - Bezpečnostní pokyny pro elektrické přístroje v místech s nebezpečím výbuchu. Pokud nemáte možnost přečíst si tento návod, můžete si u nás objednat návod přeložený do svého jazyka.
EU prohlášení o shodě
Společnost Endress+Hauser prohlašuje prostřednictvím tohoto prohlášení a použitím značky CE, že tento výrobek vyhovuje příslušným evropským směrnicím. Zmíněné směrnice, normy a dokumenty jsou uvedeny v Prohlášení o shodě.

DA - Sikkerhedsforskrifter for elektriske apparater certificeret til brug I eksplosionsfarlige områder. Hvis du ikke forstår denne manual, kan en oversat kopi af den på dit eget sprog bestilles fra os.
EU-overensstemmelseserklæring
Med denne overensstemmelseserklæring og tilføjelsen af CE-mærket sikrer producenten Endress+Hauser, at produktet er I overensstemmelse med relevante europæiske direktiver. Dokumentation for overensstemmelsen gives i de anførte direktiver, standarder og dokumenter.

EL - Οδηγίες ασφαλείας ηλεκτρικών συσκευών για επικίνδυνες για έκρηξη περιοχές. Σε περίπτωση που δεν μπορείτε να διαβάσετε αυτές τις οδηγίες, τότε μπορείτε να παραγγείλετε ένα αντίτυπο μεταφρασμένο στη γλώσσα σας.
Δήλωση συμμόρφωσης ΕΕ
Με αυτή τη δήλωση πιστότητας και την τοποθέτηση του σήματος CE ο κατασκευαστής Endress+Hauser δηλώνει, ότι αυτό το προϊόν συμορφώνεται με τις ευρωπαϊκές οδηγίες που πρέπει να εφαρμοστούν. Οι οδηγίες, τα πορότυπα και τα έγγραφα που εφαρμόστηκαν αναφέρονται στη δήλωση πιστότητας.

ES - Instrucciones de seguridad de aparatos eléctricos homologados para su utilización en áreas expuestas a riesgos de deflagración. Si no entiende este manual, puede pedir un ejemplar en su idioma.
Declaración UE de conformidad
Por la presente declaración y la inclusión de la marca CE, el fabricante Endress+Hauser, declara que el producto cumple con las directivas europeas pertinentes. Las directivas, normas y documentos de aplicación se indican en la declaración de conformidad.

ET - Ohutusjuhised plahvatusohtlikus keskkonnas kasutatavate elektriseadmete kohta. Kui Te ei saa käesolevast juhendist aru, võite meilt tellida Teie riigikeelde tõlgitud juhendi.
EL i vastavusdeklaratsioon
Tootja Endress+Hauser kinnitab juurdelisatud vastavusdeklaratsiooni esitamisega ja CE-märgise kandmisega tootele, et käesolev toode vastab kohaldatavate Euroopa Liidu direktiivide nõuetele. Kohaldatavad direktiivid, standardid ja dokumendid on ära toodud vastavusdeklaratsioonis.

FI - Turvallisuusohjeita sähkölaitteille, jotka on vahvistettu käytettäväksi räjähdysvaarallisilla alueilla. Jos et ymmärrä tätä käsikirjaa, voit tilata meiltä käännöksen omalla kansallisella kielelläsi.
EU-vaatimustenmukaisuusvakuutus
Valmistaja Endress+Hauser vakuuttaa tällä vaatimustenmukaisuustodistuksella ja CE-merkin kiinnittämisellä, että tämä tuote täyttää sovellettavien EU-direktiivien määräykset. Sovellettavat direktiivit, normit ja dokumentit on merkitty vaatimustenmukaisuustodistukseen.

HR - Sigurnosni naputci za elektromaterijal u sredini u kojoj prijeti opasnost od eksplozije. Ako Vam nije moguće čitati ovaj naputak, onda imate mogućnost da kod nas naručite naputak sastavljen na Vašem materinskom jeziku.
EU izjava o sukladnosti
Dobavljač Endress+Hauser jamči ovom izjavom i stavljanjem oznake CE da ovaj proizvod udovoljava zahtjevima europskih direktiva koje su na snazi. U izjavi o usuglašenosti se navode direktive, norme i dokumenti koji su na snazi.

HU - Biztonsági információk robbanásveszélyes területre való elektromos eszközökhöz. Amennyiben nem tudja elolvasni ezt az útmutatót, akkor megrendelheti az Ön anyanyelvére lefordítva is.
EU-megfelelőségi nyilatkozat
Az Endress+Hauser mint gyártó jelen megfelelőségi nyilatkozattal és a CE-jelzés felhelyezésével kijelenti, hogy ez a termék megfelel az alkalmazandó európai irányelveknek. Az alkalmazott irányelvek, szabványok és dokumentumok a megfelelőségi nyilatkozatban fel vannak tüntetve.

IT - Istruzioni di sicurezza per apparecchiature elettriche certificate per l'utilizzo in aree con pericolo di esplosione. Se il presente manuale non risulta comprensibile potete ordinarcene una copia tradotta nella vostra lingua.
Dichiarazione di conformità UE
Con questa dichiarazione e con l'applicazione del marchio CE, il costruttore Endress+Hauser, assicura che il prodotto è conforme alle direttive europee vigenti. Prova della conformità è fornita dall'osservanza delle direttive, delle norme e dei documenti elencati.

LT - Elektros įrenginio saugumo nurodymai, susiję su sprogimo zonomis. Jeigu negalite perskaityti šios instrukcijos, kreipkitės į mus, kad užsisakytumėte į jūsų gimtąją kalbą išverstą instrukciją.
ES atitikties deklaracija
Gamintojas Endress+Hauser šia atitikties deklaracija ir CE ženklinimu patvirtina, kad gaminys atitinka taikytinas ES direktyvas. Taikomos direktyvos, normos ir dokumentai yra pateikiami atitikties deklaracijoje.

LV - Drošības norādījumi elektrisko darba instrumentu lietošanai apgabalos, kas pakļauti sprādzienbīstamībai. Ja Jums nav iespēju izlasīt šos norādījumus, Jūs varat pasūtīt pie mums tulkojumu Jūsu valsts valodā.
ES atbilstības deklarācija
Ražotājs Endress+Hauser ar šo atbilstības apliecinājumu un CE zīmola lietojumu apstiprina, ka produkts izgatavots sakaņā ar atbilstošajām Eiropas vadlīnijām. Piemērotās vadlīnijas, normas un dokumenti atrunāti atbilstības apliecinājumā.

NL - Veiligheidsinstructies voor elektrisch materieel in explosiegevaarlijke omgeving. Wanneer u deze handleiding niet kunt lezen, kunt u een in uw landstaal vertaalde handleiding bij ons bestellen.
EU-conformiteitsverklaring
De leverancier Endress+Hauser waarborgt met deze verklaring en het aanbrengen van het CE-teken, dat dit product overeenstemt met de geldende Europese richtlijnen. De geldende richtlijnen, normen en documenten zijn aangegeven in de conformiteitsverklaring.

PL - Wskazówki dot. bezpieczeństwa dla urządzeń elektrycznych stosowanych w obszarze zagrożonym wybuchem. Jeśli niniejsza instrukcja napisana jest w języku, którym się nie posługujesz, możesz zamówić u nas przetłumaczony dokument.
Deklaracja zgodności UE
Producent Endress+Hauser w niniejszej deklaracji zgodności wraz z nadaniem znaku CE oświadcza, że produkt ten jest zgodny z obowiązującą Europejską Dyrektywą. Zastosowane wytyczne, normy oraz dukumenty podane są w deklaracji zgodności.

PT - Instruções de segurança para dispositivos eléctricos certificados para utilização em áreas de risco de incêndio. Se não compreender este manual, pode encomendar-nos directamente uma cópia na sua língua.
Declaração UE de conformidade
Com esta declaração de conformidade e a aplicação da marca CE, o fabricante Endress+Hauser, garante que o produto obedece às directivas europeias a aplicar. As directivas, normas e documentos são apresentadas na declaração de conformidade.

RO - Indicații de siguranță pentru mijloacele de producție electrice pentru zonele periclitate de explozie. Dacă nu puteți citi aceste instrucțiuni, atunci puteți comanda la noi instrucțiunile traduse în limba țării dumneavoastră.
Declarația UE de conformitate
Producătorul Endress+Hauser declară prin declarația de conformitate alăturată şi prin aplicarea semnului CE că acest produs corespunde directivelor europene aplicabile. Directivele, normele aplicate şi documentele sunt menționate în declarația de conformitate.

SK - Bezpečnostné pokyny pre elektrické zariadenie prevádzkované v priestoroch s nebezpečenstvom výbuchu. Ak nemáte možnosť prečítať si tento návod, môžete si u nás objednať návod preložený do svojho jazyka.
EÚ vyhlásenie o zhode
Spoločnosť Endress+Hauser vyhlasuje prostredníctvom tohto vyhlásenia o konformite a použitím značky CE, že tento výrobok vyhovuje príslušným európskym smerniciam. Zmieňované smernice, normy a dokumenty sú uvedené vo Vyhlásení o konformite.

SL - Varnostni napotki glede električne opreme, namenjene za uporabo veksplozivnih območjih. Če teh navodil ne morete razumeti, lahko pri nas naročite prevod v vaš jezik.
Izjava EU o skladnosti
Proizvajalec Endress+Hauser s to izjavo o skladnosti in navedbo oznake CE izjavlja, da je ta izdelek skladen s predpisanimi evropskimi smernicami. Upoštevane smernice, standardi in dokumenti so navedeni v izjavi o skladnosti.

SV - Säkerhetsföreskrifter för elektrisk utrustning certifierad för användning i explosionsfarliga områden. Om du inte förstår denna manual, kan en översatt kopia på ditt eget språk beställas från oss.
EU-försäkran om överensstämmelse
Endress+Hauser försäkrar med vidstående försäkran om överensstämmelse och med CE-märkningen att denna produkt överensstämmer med de tillämpbara europeiska riktlinjerna. De tillämpade riktlinjerna, normerna och dokumenten anges i försäkran om överensstämmelse.

XA00072R Omnigrad TR1x, TR4x, TR88, TR6x, TC1x, TC88, TEC420, TC6x

EG/EU-Konformitätserklärung
EC/EU-Declaration of Conformity
Déclaration CE/UE de Conformité

Endress+Hauser
People for Process Automation

CE

Company **Endress+Hauser Wetzer GmbH+Co. KG, Obere Wank 1, 87484 Nesselwang**

erklärt als Hersteller in alleiniger Verantwortung, dass das Produkt
declares as manufacturer under sole responsibility, that the product
déclare sous sa seule responsabilité en qualité de fabricant que le produit

Product **Thermometer**
TR10, TR11, TR12, TR13, TR15, TR24, TR45, TR47, TR88, TR61, TR62, TR63, TR65, TR66, TST310, TM411, TM412
TC10, TC12, TC13, TC15, TC88, TEC420, TC61, TC62, TC63, TC65, TC66, TSC310
Messeinsatz/Insert
TPR100, TS111, TPC100, TM211

Regulations den folgenden Europäischen Richtlinien entspricht:
conforms to following European Directives:
est conforme aux prescription des Directives Européennes suivantes :

	gültig bis/valid until/date d'expiration 19.04.2016	gültig ab/valid from/valide à partir du 20.04.2016
EMC	2004/108/EC (L 390/24)	2014/30/EU (L 96/79)
ATEX	94/9/EC (L 100/1)	2014/34/EU (L 96/309)

Standards angewandte harmonisierte Normen oder normative Dokumente:
applied harmonized standards or normative documents:
normes harmonisées ou documents normatifs appliqués :

EN 61326-1	(2013)	EN 60079-0	(2012)	+ Cor. (2013)		
EN 61326-2-3	(2013)	EN 60079-11	(2012)			
EN 61326-2-5	(2013)	EN 60079-26	(2007)		EN 61010-1	(2010)

Die in der zugehörigen EU-Baumusterprüfbescheinigung DEKRA 12ATEX0161 X genannten Normen wurden durch neue Ausgaben ersetzt. Die Änderungen in den neuen Normen betreffen unsere Produkte nicht. Wir erklären für das genannte Produkt auch die Übereinstimmung mit den Anforderungen der neuen Normenausgabe.
The standards associated to the EU-certificate of conformity DEKRA 12ATEX0161 X have been replaced by new editions. The modification in the new standards does not apply to our products. We therefore declare the conformity to the stated product with the requirements of the new issued standards.
Les normes associées au certificat CE de conformité DEKRA 12ATEX0161 X ont été remplacées par de nouvelles éditions. Les modifications dans les nouvelles normes ne s'appliquent pas à nos produits. Nous déclarons donc la conformité du produit cité avec les exigences des nouvelles éditions des normes.

Certification EG-Baumusterprüfbescheinigung Nr. DEKRA 12ATEX0161 X
EC-Type Examination Certificate No.
Numéro de l'attestation d'examen CE de type

Ausgestellt von/issued by/délivré par DEKRA Certification B.V. (0344)
Qualitätssicherung/Quality assurance/Système d'assurance qualité TÜV Nord Cert (0044)

Nesselwang, 20.01.2016
Endress+Hauser Wetzer GmbH+Co. KG

Harald Hertweck
Managing Director

EC_00177_01.16 71316067

Omnigrad TR1x, TR4x, TR88, TR6x, TC1x, TC88, TEC420, TC6x

RTD/TC thermometers

Inhaltsverzeichnis

Ergänzende Dokumentation 6
Herstellerbescheinigungen 6
Sicherheitshinweise 6
Sicherheitshinweise: Allgemein 7
Sicherheitshinweise: Installation in Geräte der Gruppe III 7
Sicherheitshinweise: Eigensicherheit 8
Sicherheitshinweise: Zone 0 8
Sicherheitshinweise: Besondere Bedingungen 8
Sicherheitshinweise: Zonentrennwand 8
Temperaturtabellen 9
..... 11

Ergänzende Dokumentation

Explosionsschutzbroschüre: CP00021Z/11

Die Explosionsschutzbroschüre ist verfügbar: Im Download-Bereich der Endress+Hauser Internetseite: www.endress.com → Download → Erweitert → Dokumentationscode: CP00021Z

Herstellerbescheinigungen

EG-Konformitätserklärung

→ 📄 4

Das Anbringen der Zertifikatsnummer bescheinigt die Konformität mit den folgenden Normen (abhängig von der Geräteausführung).

- IEC 60079-0: 2011
- IEC 60079-11: 2011
- IEC 60079-26: 2006+Cor 2009

Sicherheitshinweise

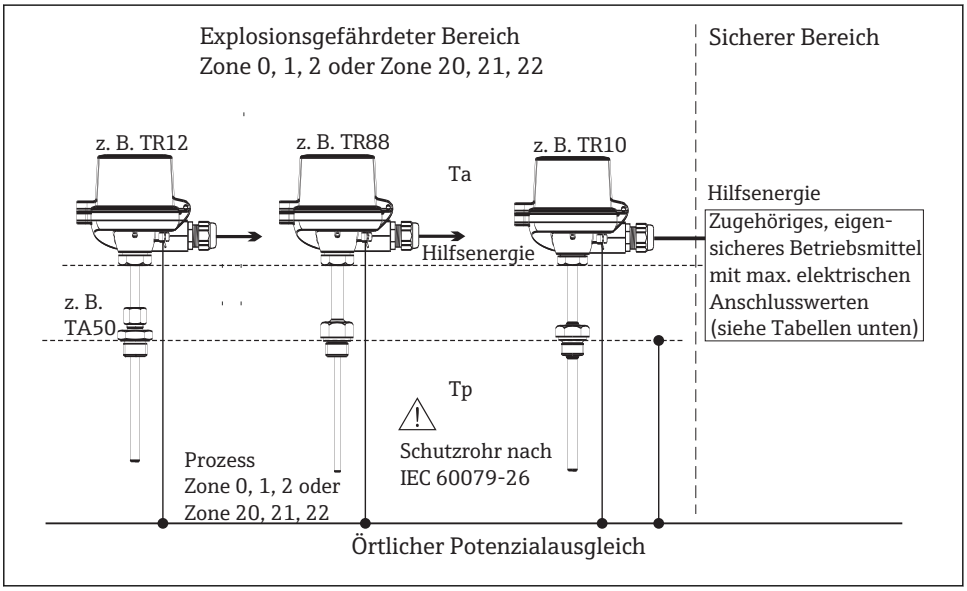

A0019222-DE

Sicherheitshinweise: Allgemein

- Die Installations- und Sicherheitshinweise der Betriebsanleitung beachten.
- Gemäß Herstellerangaben und den gültigen Normen und Regeln installieren (z.B. EN/IEC 60079-14).
- Die Thermometer bzw. Sensoren sind an die Potenzialausgleichsleitung anzuschließen, oder müssen in einem geerdeten metallischen Rohrleitungssystem bzw. Behälter eingebaut sein.
- Bei der Verwendung von Klemmverschraubungen (z.B. TA50, TA60, TA70) mit nichtmetallischen Pressringen kann von einer sicheren Erdung beim Einbau in ein metallisches System nicht ausgegangen werden. Daher ist für eine zusätzliche sichere Anbindung an die Potenzialausgleichsleitung zu sorgen.
- Bei Verwendung einer Steckverbindung (z.B. PA-Stecker von Weidmüller) ist darauf zu achten, dass die Anforderungen für die entsprechende Kategorie und seine Betriebstemperatur eingehalten werden.

Sicherheitshinweise: Installation in Geräte der Gruppe III

- Die Sensoren für Thermometer ohne Schutzrohr (z.B. Tx62, TR24, Tx88) müssen mechanisch durch ein Schutzrohr für Kategorie 3 in Übereinstimmung mit IEC 60079-0 und IEC 60079-11 und seiner endgültigen Applikation geschützt werden.
- Kabeleinführungen mit geprüften Kabelverschraubungen dicht verschließen (min. IP6X) IP6X, nach IEC 60529.
- Die optional mitgelieferten Kabelverschraubungen sind ATEX/IECEx bescheinigt und für Temperaturen im Bereich von −20 ... +95 °C geeignet.
- Für den Betrieb des Thermometers bei einer Umgebungstemperatur unter −20 °C und über +95 °C sind geeignete Leitungen und für diesen Einsatz zugelassene Leitungseinführungen zu verwenden.
- Bei Umgebungstemperaturen von mehr als 70 °C sind geeignete hitzebeständige Kabel oder Leitungen, Kabeleingänge und Dichtungen zu verwenden, deren Einsatztemperatur +5 K über der Umgebungstemperatur liegt.
- Bei Verwendung einer Steckverbindung (z.B. PA-Stecker von Weidmüller) ist darauf zu achten, dass die Anforderungen für die entsprechende Kategorie und seine Betriebstemperatur eingehalten werden.
- Das Thermometer muss so errichtet werden, dass auch in selten auftretenden Fällen eine Zündquelle durch Stoß oder Reibung zwischen Metall/Stahl und dem Anschlusskopf ausgeschlossen ist.

⚠ WARNUNG

Explosionsfähige Atmosphäre

▶ Das Gerät ist in einer explosionsfähigen Atmosphäre nicht unter Spannung zu öffnen. (Es ist darauf zu achten, dass der Gehäuseschutzgrad von IP6X während des Betriebs eingehalten wird.)

Sicherheitshinweise: Eigensicherheit

- Die Installations- und Sicherheitshinweise der Betriebsanleitung beachten.
- Gemäß Herstellerangaben und den gültigen Normen und Regeln installieren (IEC/EN 60079-14).
- Sicherheitshinweise des verwendeten Transmitters beachten.
- Das Display, Typ TID10, darf nur in Zone 1 (EPL Gb) oder Zone 2 (EPL Gc) installiert werden.
- Beim Zusammenschalten der Geräte mit bescheinigten eigensicheren Stromkreisen der Kategorie ib ändert sich die Zündschutzart wie folgt: **Ex ib IIC**
- Bei Anschluss eines eigensicheren Stromkreises ib den Sensor nicht ohne Schutzrohr nach IEC 60079-26 in der Zone 0 betreiben.
- Beim Anschluss von dualen Messeinsätzen ist darauf zu achten, dass bei bei der Potenzialausgleichsleitung das gleiche Potenzial vorhanden ist.
- Die Messeinsätze mit 3 mm Durchmesser oder geerdete Messeinsätze, z. B. Typ TPC100, müssen an die Potenzialausgleichsleitung angeschlossen werden.
- Bei Messeinsätzen mit 3 mm Durchmesser oder bei geerdeten Messeinsätzen, z. B. Typ TPC100, muss eine eigensichere Speisung mit galvanischer Trennung verwendet werden.

Sicherheitshinweise: Zone 0

- Explosionsfähige Dampf-/Luftgemische dürfen nur unter atmosphärischen Bedingungen auftreten:
  - −20 °C ≤ Ta ≤ +60 °C
  - −0,8 bar ≤ p ≤ 1,1 bar
- Liegen keine explosionsfähigen Gemische vor oder sind Zusatzmaßnahmen gemäß EN1127-1 getroffen, dürfen die Geräte auch außerhalb der atmosphärischen Bedingungen gemäß ihrer Herstellerspezifikation betrieben werden.
- Zugehörige Betriebsmittel mit galvanischer Trennung zwischen eigensicheren und nicht eigensicheren Stromkreisen bevorzugen.

Sicherheitshinweise: Besondere Bedingungen

- Das Thermometer muss so errichtet werden, dass auch in selten auftretenden Fällen eine Zündquelle durch Stoß oder Reibung zwischen Metall/Stahl und dem Anschlusskopf ausgeschlossen ist.
- Elektrostatische Aufladung der Kunststoff-Oberfläche am TA20B Anschlusskopf vermeiden.
- Elektrostatische Aufladung des Kunststoffgehäuses vermeiden (nicht trocken reiben).

Sicherheitshinweise: Zonentrennwand

Das Thermometer in eine Zonentrennwand in Übereinstimmung mit IEC 60079-26, bezogen auf die endgültige Applikation, installieren.

Temperaturtabellen

Zugehöriges, eigensicheres Betriebsmittel mit maximalen elektrischen Anschlusswerten, typische Werte der eingebauten Transmitter:

Transmitter	Ui	Ii	Pi	Ci	Li
TMT181	30 V	100 mA	760 mW	0	0
TMT182			750 mW		
TMT82		130 mA	800 mW		
TMT84, TMT85	17,5 V	500 mA	5,5 W	5 nF	-
ohne	30 V	140 mA	1000 mW	1 nF	1 mH

Kategorie	Zündschutzart (ATEX)	Typ
II 1D	Ex ia IIIC T85 °C...T450 °C Da	TR10, TR11, TR12, TR13, TR15, TR24, TR45, TR47, TR88 TR61, TR62, TR63, TR65, TR66 TC10, TC12, TC13, TC15, TC88, TEC420 TC61, TC62, TC63, TC65, TC66
II 1/2D	Ex ia IIIC T85 °C...T450 °C Da/Db	
II 1G	Ex ia IIC T6...T1 Ga	
II 1/2G	Ex ia IIC T6...T1 Ga/Gb	

Zündschutzart (IEC)	Typ
Ex ia IIC T6...T1 Ga/Gb	TR10, TR11, TR12, TR13, TR15, TR24, TR45, TR47, TR88 TR61, TR62, TR63, TR65, TR66 TC10, TC12, TC13, TC15, TC88, TEC420 TC61, TC62, TC63, TC65, TC66

Abhängigkeit der Umgebungs- und Prozesstemperatur von der Temperaturklasse des Gerätes mit installiertem Transmitter

Typ	Installierter Transmitter	Temperaturklasse	Umgebungstemperatur (Gehäuse)	Maximale Oberflächentemperatur (Gehäuse)
TR1x TC1x	TMT181 TMT182 TMT84/TMT85	T6	−40 °C ≤ Ta ≤ +55 °C	T85 °C
		T5	−40 °C ≤ Ta ≤ +70 °C	T100 °C
		T4	−40 °C ≤ Ta ≤ +85 °C	T135 °C
	TMT82	T6	−40 °C ≤ Ta ≤ +58 °C	T85 °C
		T5	−40 °C ≤ Ta ≤ +75 °C	T100 °C
		T4	−40 °C ≤ Ta ≤ +85 °C	T135 °C
	TMT8x mit Anzeige	T6	−40 °C ≤ Ta ≤ +55 °C	T85 °C
		T5	−40 °C ≤ Ta ≤ +70 °C	T100 °C
		T4	−40 °C ≤ Ta ≤ +85 °C	T135 °C

Typ	Installierter Transmitter	Durchmesser Messeinsatz	Prozesstemperatur	Temperaturklasse/Maximale Oberflächentemperatur (Sensor)
TR1x TC1x	TMT18x TMT8x	3 mm, 3 mm dual oder 6 mm dual	−50 °C ≤ Tp ≤ +66 °C	T6/T85 °C
			−50 °C ≤ Tp ≤ +81 °C	T5/T100 °C
			−50 °C ≤ Tp ≤ +116 °C	T4/T135 °C
			−50 °C ≤ Tp ≤ +181 °C	T3/T200 °C
			−50 °C ≤ Tp ≤ +276 °C	T2/T300 °C
			−50 °C ≤ Tp ≤ +426 °C	T1/T450 °C
		6 mm	−50 °C ≤ Tp ≤ +73 °C	T6/T85 °C
			−50 °C ≤ Tp ≤ +88 °C	T5/T100 °C
			−50 °C ≤ Tp ≤ +123 °C	T4/T135 °C
			−50 °C ≤ Tp ≤ +188 °C	T3/T200 °C
			−50 °C ≤ Tp ≤ +283 °C	T2/T300 °C
			−50 °C ≤ Tp ≤ +433 °C	T1/T450 °C

Abhängigkeit der Umgebungs- und Prozesstemperatur von der Temperaturklasse des Gerätes ohne installiertem Transmitter (Anschlussklemmenblock):

Durchmesser Messeinsatz	Temperaturklasse/ Maximale Oberflächen-temperatur	Tp (Prozess) - Maximal erlaubte Prozesstemperatur (Sensor)				
		Pi ≤ 50 mW	Pi ≤ 100 mW	Pi ≤ 200 mW	Pi ≤ 500 mW	Pi ≤ 650 mW
3 mm, 3 mm dual oder 6 mm dual	T1/T450 °C	426 °C	415 °C	396 °C	343 °C	333 °C
	T2/T300 °C	276 °C	265 °C	246 °C	193 °C	183 °C
	T3/T200 °C	181 °C	170 °C	151 °C	98 °C	88 °C
	T4/T135 °C	116 °C	105 °C	86 °C	33 °C	23 °C
	T5/T100 °C	81 °C	70 °C	51 °C	−2 °C	−12 °C
	T6/T85 °C	66 °C	55 °C	36 °C	−17 °C	−27 °C
6 mm	T1/T450 °C	433 °C	428 °C	420 °C	398 °C	388 °C
	T2/T300 °C	283 °C	278 °C	270 °C	248 °C	238 °C
	T3/T200 °C	188 °C	183 °C	175 °C	153 °C	143 °C
	T4/T135 °C	123 °C	118 °C	110 °C	88 °C	78 °C
	T5/T100 °C	88 °C	83 °C	75 °C	53 °C	43 °C
	T6/T85 °C	73 °C	68 °C	60 °C	38 °C	28 °C

Durchmesser Messeinsatz	Temperatur-klasse/ Maximale Oberflächen-temperatur	Tp (Prozess) - Maximal erlaubte Prozesstemperatur (Sensor)			Ta - Umge-bungstempe-ratur (Gehäuse) [1]
		Pi ≤ 750 mW	Pi ≤ 800 mW	Pi ≤ 1000 mW	
3 mm, 3 mm dual oder 6 mm dual	T1/T450 °C	320 °C	312 °C	280 °C	−40 °C ≤ Ta ≤ +130 °C
	T2/T300 °C	170 °C	162 °C	130 °C	
	T3/T200 °C	75 °C	62 °C	30 °C	
	T4/T135 °C	10 °C	2 °C	−30 °C	−40 °C ≤ Ta ≤ +116 °C
	T5/T100 °C	−25 °C	−33 °C	-	−40 °C ≤ Ta ≤ +81 °C
	T6/T85 °C	−40 °C	-	-	−40 °C ≤ Ta ≤ +66 °C
6 mm	T1/T450 °C	381 °C	377 °C	361 °C	−40 °C ≤ Ta ≤ +130 °C
	T2/T300 °C	231 °C	227 °C	211 °C	
	T3/T200 °C	136 °C	127 °C	111 °C	
	T4/T135 °C	71 °C	67 °C	51 °C	−40 °C ≤ Ta ≤ +123 °C
	T5/T100 °C	36 °C	32 °C	16 °C	−40 °C ≤ Ta ≤ +88 °C
	T6/T85 °C	21 °C	17 °C	1 °C	−40 °C ≤ Ta ≤ +73 °C

1) Bei Verwendung eines TA20R oder TA21E Gehäuse die maximal erlaubten Temperaturen beachten (TI072t02).

Bestimmung der Prozesstemperatur für Pi ≤ 50 mW:

Durchmesser Messeinsatz	Wärmewiderstand (Rth) für Pi ≤ 50 mW	Berechnungsformel für die Prozesstemperatur (Tp)
3 mm, 3 mm dual oder 6 mm dual	274K/W	$Tp < T_{Klasse}$ [1]- Tol. [2]- (Rth x P_0 [3])
	144K/W	
6 mm		

1) Angabe Temperaturklasse, z. B. 85 °C(K) für T6
2) Toleranzangabe gemäß IEC60079-0, Kapitel 26.5.1.3: 5 K für T6, T5, T4 und T3 10 K für T2 und T1
3) P_0 von eigensicherem Temperatureingang (z. B. Sensorstromkreis TMT182, P_0 = 6,6 mW)

Berechnungsbeispiel für T6 und 6 mm Messeinsatz: $Tp < T_{Klasse}$ - Tol. - (Rth x P_0)

Tp < 85 °C(K) - 5K - (144K/W x 6,6 mW)

Tp < 79,04 °C

Omnigrad TR1x, TR4x, TR88, TR6x, TC1x, TC88, TEC420, TC6x

RTD/TC thermometers

Table of contents

Supplementary Documentation 14
Manufacturer´s certificates 14
Safety instructions 14
Safety Instructions: General 15
Safety instructions: Installation in equipment of Group III 15
Safety instructions: Intrinsic safety 16
Safety instructions: Zone 0 16
Safety instructions: Special conditions 16
Safety instructions: Partition wall 16
Temperature tables 17
..... 19

Supplementary Documentation

Explosion-protection brochure: CP00021Z/11

The Explosion-protection brochure is available: In the download area of the Endress+Hauser website: www.endress.com → Download → Advanced → Documentation code: CP00021Z

Manufacturer´s certificates

EC Declaration of Conformity

→ 📄 4

Affixing the certificate number certifies conformity with the following standards (depending on the device version).

- IEC 60079-0: 2011
- IEC 60079-11: 2011
- IEC 60079-26: 2006+Cor 2009

Safety instructions

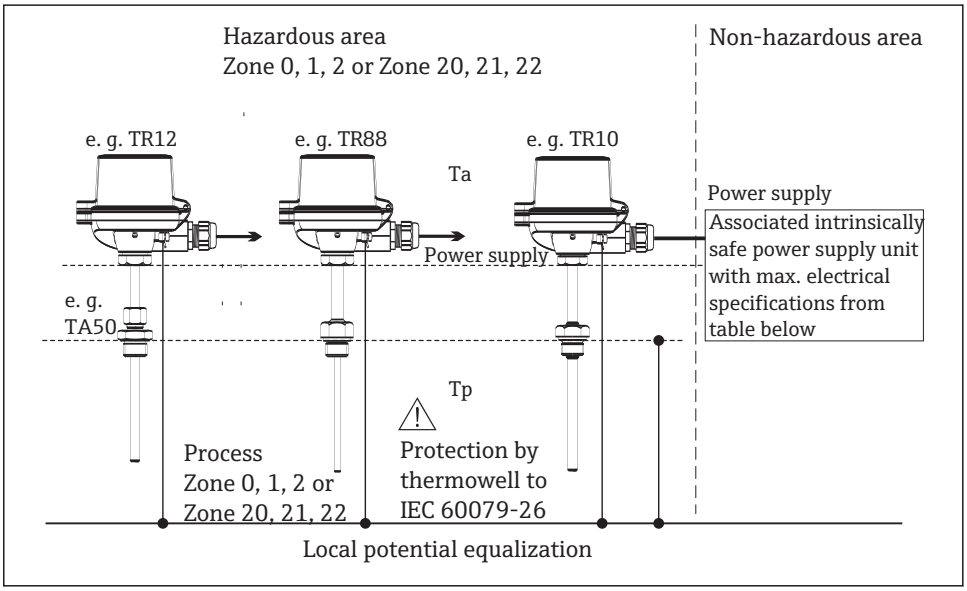

A0019222-EN

Safety Instructions: General

- Comply with the installation and safety instructions in the Operating Instructions.
- Install the device according to the manufacturer's instructions and any other valid standards and regulations (z.B. EN/IEC 60079-14).
- The housing of the thermometer must be connected to the local potential equalization or installed in a grounded metallic piping or tank respectively.
- It cannot be taken for granted that when using compression fittings (e.g. TA50, TA60, TA70) with non metallic olives that there is a secure grounding when installing in a metal system. This means that an additional safe connection to the local potential equalization needs to be used.
- For using of a plug-in connector (e.g. PA-connector by Weidmüller) is to be observed that the requirements for the respective category and the operating temperature are followed.

Safety instructions: Installation in equipment of Group III

- Sensors for thermometers without thermowell (e.g. TX62, TR24, TX88) are to be mechanically protected by thermowell suitable for Group III in compliance with IEC 60079-11 and IEC 60079-0 and its ultimate application.
- Seal the cable entries tight with certified cable glands (min. IP6X) IP6X according to IEC 60529.
- The provided cable glands according to option code are suitable ATEX/IECEx Ex certified glands with a temperature range of −20 to +95 °C.
- For operating the thermometer at an ambient temperature under −20 °C, appropriate cables, cable entries and sealing facilities permitted for this application must be used.
- For ambient temperatures higher than +70 °C, use suitable heat-resisting cables or wires, cable entries and sealing facilities for Ta +5K above surrounding.
- For using of a plug-in connector (e.g. PA-connector by Weidmüller) is to be observed that the requirements for the respective category and the operating temperature are followed.
- The thermometer must be installed and maintained so, that even in the event of rare incidents, an ignition source due to impact or friction between the housing and iron/steel is excluded.

⚠ WARNING

Explosive atmosphere

▶ In an explosive atmosphere, do not open the device when voltage is supplied (ensure that at least IP6X is maintained during operation).

Safety instructions: Intrinsic safety

- Comply with the installation and safety instructions in the Operating Instructions.
- Install the device according to the manufacturer's instructions and any other valid standards and regulations (e.g. IEC 60079-14).
- Observe the safety instructions for the used transmitters.
- The display, type TID10, may only be installed in Zone 1 (EPL Gb) or Zone 2 (EPL Gc).
- The type of protection changes as follows when the devices are connected to certified intrinsically safe circuits of Category ib: Ex ib IIC.
- When connecting to an intrinsically safe ib circuit, do not operate the sensor at Zone 0 without any thermowell according to IEC 60079-26.
- When connecting dual sensors make sure that the potential equalizations are at the same local potential equalization.
- Inserts with 3 mm diameter or grounded inserts, e.g. type TPC100 must be connected to the local potential equalization.
- For inserts with 3 mm diameter or grounded inserts, e.g. type TPC100 an intrinsically safe supply with galvanic isolation must be used.

Safety instructions: Zone 0

- Only operate devices in potentially explosive vapour/air mixtures under atmospheric conditions:
  - −20 °C ≤ Ta ≤ +60 °C
  - −0.8 bar ≤ p ≤ 1.1 bar
- If no potentially explosive mixtures are present, or if additional protective measures have been taken, according to EN 1127-1, the transmitters may be operated under other atmospheric conditions in accordance with the manufacturer's specifications.
- Associated apparatus with galvanic isolation between the intrinsically safe and non-intrinsically safe circuits are preferred.

Safety instructions: Special conditions

- The thermometer must be installed so, that even in the event of rare incidents, an ignition source due to impact or friction between the housing and iron/steel is excluded.
- Avoid electrostatic charging of the plastic surfaces of TA20B housing.
- Avoid electrostatic charging of the plastic housing (do not rub dry).

Safety instructions: Partition wall

Install the thermometer in a partition wall which is in compliance with IEC 60079-26 in reference to its ultimate application.

Temperature tables

Associated intrinsically safe power supply unit with maximum electrical specifications below the characteristic values of the assembled transmitter:

Transmitter	Ui	Ii	Pi	Ci	Li
TMT181	30 V	100 mA	760 mW	0	0
TMT182			750 mW		
TMT82		130 mA	800 mW		
TMT84, TMT85	17.5 V	500 mA	5.5 W	5 nF	-
without	30 V	140 mA	1000 mW	1 nF	1 mH

Category	Type of protection (ATEX)	Type
II 1D	Ex ia IIIC T85 °C...T450 °C Da	TR10, TR11, TR12, TR13, TR15, TR24, TR45, TR47, TR88 TR61, TR62, TR63, TR65, TR66 TC10, TC12, TC13, TC15, TC88, TEC420 TC61, TC62, TC63, TC65, TC66
II 1/2D	Ex ia IIIC T85 °C...T450 °C Da/Db	
II 1G	Ex ia IIC T6...T1 Ga	
II 1/2G	Ex ia IIC T6...T1 Ga/Gb	

Type of protection (IEC)	Type
Ex ia IIC T6...T1 Ga/Gb	TR10, TR11, TR12, TR13, TR15, TR24, TR45, TR47, TR88 TR61, TR62, TR63, TR65, TR66 TC10, TC12, TC13, TC15, TC88, TEC420 TC61, TC62, TC63, TC65, TC66

The dependency of the ambient and process temperatures upon the temperature class for assembly with transmitters:

Type	Assembled Transmitter	Temperature class	Ambient temperature range housing	Maximum surface temperature housing
TR1x TC1x	TMT181 TMT182 TMT84/TMT85	T6	−40 °C ≤ Ta ≤ +55 °C	T85 °C
		T5	−40 °C ≤ Ta ≤ +70 °C	T100 °C
		T4	−40 °C ≤ Ta ≤ +85 °C	T135 °C
	TMT82	T6	−40 °C ≤ Ta ≤ +58 °C	T85 °C
		T5	−40 °C ≤ Ta ≤ +75 °C	T100 °C
		T4	−40 °C ≤ Ta ≤ +85 °C	T135 °C
	TMT8x with display	T6	−40 °C ≤ Ta ≤ +55 °C	T85 °C
		T5	−40 °C ≤ Ta ≤ +70 °C	T100 °C
		T4	−40 °C ≤ Ta ≤ +85 °C	T135 °C

Type	Assembled Transmitter	Insert diameter	Process temperature range	Temperature class/maximum surface temperature sensor
TR1x TC1x	TMT18x TMT8x	3 mm, 3 mm dual or 6 mm dual	−50 °C ≤ Tp ≤ +66 °C	T6/T85 °C
			−50 °C ≤ Tp ≤ +81 °C	T5/T100 °C
			−50 °C ≤ Tp ≤ +116 °C	T4/T135 °C
			−50 °C ≤ Tp ≤ +181 °C	T3/T200 °C
			−50 °C ≤ Tp ≤ +276 °C	T2/T300 °C
			−50 °C ≤ Tp ≤ +426 °C	T1/T450 °C
		6 mm	−50 °C ≤ Tp ≤ +73 °C	T6/T85 °C
			−50 °C ≤ Tp ≤ +88 °C	T5/T100 °C
			−50 °C ≤ Tp ≤ +123 °C	T4/T135 °C
			−50 °C ≤ Tp ≤ +188 °C	T3/T200 °C
			−50 °C ≤ Tp ≤ +283 °C	T2/T300 °C
			−50 °C ≤ Tp ≤ +433 °C	T1/T450 °C

The dependency of the ambient and process temperatures upon the temperature class for assembly without transmitter (terminal block):

Insert diameter	Temperature class/ Maximum surface temperature	Tp (process) - maximum allowed process temperature (sensor)				
		Pi ≤ 50 mW	Pi ≤ 100 mW	Pi ≤ 200 mW	Pi ≤ 500 mW	Pi ≤ 650 mW
3 mm, 3 mm dual or 6 mm dual	T1/T450 °C	426 °C	415 °C	396 °C	343 °C	333 °C
	T2/T300 °C	276 °C	265 °C	246 °C	193 °C	183 °C
	T3/T200 °C	181 °C	170 °C	151 °C	98 °C	88 °C
	T4/T135 °C	116 °C	105 °C	86 °C	33 °C	23 °C
	T5/T100 °C	81 °C	70 °C	51 °C	−2 °C	−12 °C
	T6/T85 °C	66 °C	55 °C	36 °C	−17 °C	−27 °C
6 mm	T1/T450 °C	433 °C	428 °C	420 °C	398 °C	388 °C
	T2/T300 °C	283 °C	278 °C	270 °C	248 °C	238 °C
	T3/T200 °C	188 °C	183 °C	175 °C	153 °C	143 °C
	T4/T135 °C	123 °C	118 °C	110 °C	88 °C	78 °C
	T5/T100 °C	88 °C	83 °C	75 °C	53 °C	43 °C
	T6/T85 °C	73 °C	68 °C	60 °C	38 °C	28 °C

Insert diameter	Temperature class/ Maximum surface temperature	Tp (process) - maximum allowed process temperature (sensor)			Ta (ambient) - ambient temperature (housing) [1]
		Pi ≤ 750 mW	Pi ≤ 800 mW	Pi ≤ 1000 mW	
3 mm, 3 mm dual or 6 mm dual	T1/T450 °C	320 °C	312 °C	280 °C	−40 °C ≤ Ta ≤ +130 °C
	T2/T300 °C	170 °C	162 °C	130 °C	
	T3/T200 °C	75 °C	62 °C	30 °C	
	T4/T135 °C	10 °C	2 °C	−30 °C	−40 °C ≤ Ta ≤ +116 °C
	T5/T100 °C	−25 °C	−33 °C	-	−40 °C ≤ Ta ≤ +81 °C
	T6/T85 °C	−40 °C	-	-	−40 °C ≤ Ta ≤ +66 °C
6 mm	T1/T450 °C	381 °C	377 °C	361 °C	−40 °C ≤ Ta ≤ +130 °C
	T2/T300 °C	231 °C	227 °C	211 °C	
	T3/T200 °C	136 °C	127 °C	111 °C	
	T4/T135 °C	71 °C	67 °C	51 °C	−40 °C ≤ Ta ≤ +123 °C
	T5/T100 °C	36 °C	32 °C	16 °C	−40 °C ≤ Ta ≤ +88 °C
	T6/T85 °C	21 °C	17 °C	1 °C	−40 °C ≤ Ta ≤ +73 °C

1) When using TA20R or TA21E housing please observe the maximumallowed temperature per TI072t02.

Determination of process temperature for Pi ≤ 50 mW:

Insert diameter	Thermal resistance (Rth) for Pi ≤ 50 mW	Formula for calculating process temperature (Tp)
3 mm, 3 mm dual or6 mm dual	274K/W	Tp < T_{class} [1]-Tol. [2]Tol.-(Rth x P_0 [3]
	144K/W	
6 mm		

1) Inserting of temperature class, e.g. 85 °C (K) for T6
2) Inserting of Tolerances to IEC60079-0 chapter 26.5.1.3: 5 K for T6, T5, T4 and T3 10 K for T2 and T1
3) P0 of intrinsic safe temperature input (e.g. measurement circuit TMT182, P0 = 6.6 mW)

Calculation example for T6 and 6 mm insert: Tp < T_{class} - Tol. - (Rth x P_0)

Tp < 85 °C(K) - 5K - (144K/W x 6.6 mW)

Tp < 79.04 °C

Omnigrad TR1x, TR4x, TR88, TR6x, TC1x, TC88, TEC420, TC6x

RTD/TC thermometers

Sommaire

Documentation complémentaire 22
Certificats 22
Conseils de sécurité 22
Conseils de sécurité : Généralités 23
Conseils de sécurité : Installation dans des appareils du groupe III ... 23
Conseils de sécurité : Sécurité intrinsèque 24
Conseils de sécurité : Zone 0 24
Conseils de sécurité : Conditions particulières 25
Conseils de sécurité : Paroi de séparation de zone 25
Tableaux des températures 25
..... 28

Documentation complémentaire

Brochure sur les risques d'explosion : CP00021Z/11

La brochure sur la protection contre les explosions est disponible : Dans la zone de téléchargement sur le site Internet Endress+Hauser : www.endress.com → Documentations → Avancée → Référence de la documentation : CP00021Z

Certificats

Déclaration de conformité

→ 📄 4

En apposant le numéro de certificat, on certifie la conformité aux normes suivantes (en fonction de l'exécution de l'appareil).

- IEC 60079-0 : 2011
- IEC 60079-11 : 2011
- IEC 60079-26 : 2006+Cor 2009

Conseils de sécurité

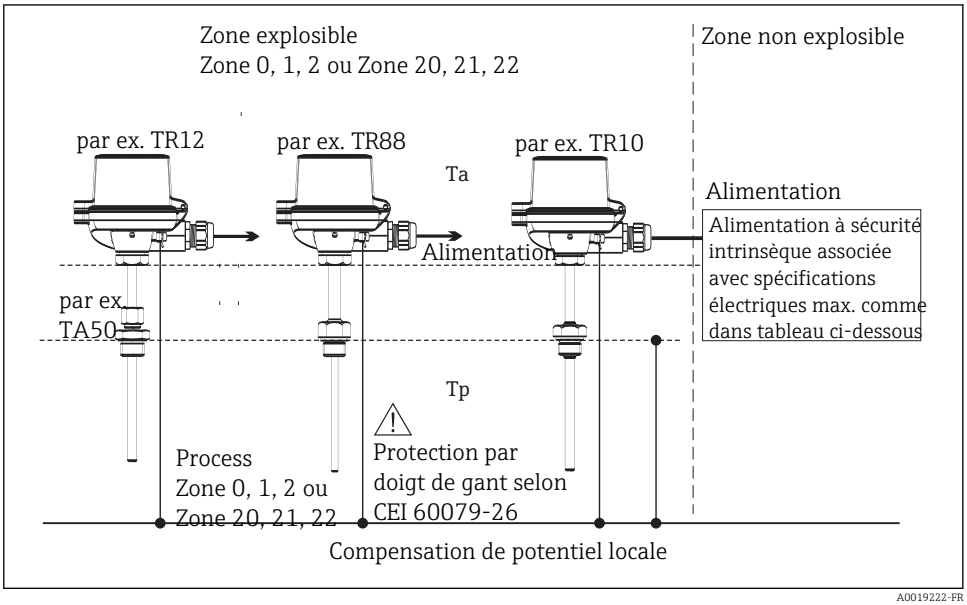

A0019222-FR

Conseils de sécurité : Généralités

- Tenir compte des conseils d'installation et de sécurité du manuel de mise en service.
- Installer d'après les instructions du fabricant et les normes et règles en vigueur (EN/CEI 60079-14).
- Les thermomètres resp. capteurs doivent être reliés à la ligne d'équipotentialité ou doivent être intégrés à un système de conduites métalliques ou un réservoir mis à la terre.
- Lors de l'utilisation de raccords à visser (par ex. TA50, TA60, TA70) avec des rondelles non métalliques, on ne peut pas garantir une mise à la terre fiable lors d'un montage dans un système métallique. De ce fait, il convient d'assurer une liaison supplémentaire sûre à la ligne d'équipotentialité.
- Lors de l'utilisation d'une connexion embrochable (par ex. connecteur PA de Weidmüller), il faut veiller à ce que les exigences pour la catégorie correspondante et sa température de service soient respectées.

Conseils de sécurité : Installation dans des appareils du groupe III

- Les capteurs de température sans doigt de gant (par ex. Tx62, TR24, Tx88) doivent être protégés mécaniquement par un doigt de gant pour le groupe III conformément à CEI 60079-11 et CEI 60079-0 et à l'application finale.
- Fermer les entrées de câble de manière étanche avec des raccords vérifiés (min. IP6X) IP6X, selon CEI 60529.
- Les entrées de câble fournies en option sont certifiées ATEX/IECEx et appropriées pour des températures dans une gamme de −20 ... +95 °C.
- Pour l'utilisation du thermomètre à une température ambiante inférieure à −20 °Cil convient d'employer des câbles appropriés ainsi que des entrées de câble agrées pour cette application.
- Lors de températures ambiantes supérieures à 70 °Cil convient d'utiliser des câbles ou des conducteurs ainsi que des joints résistant à la chaleur et dont la température de service dépasse de +5K la température ambiante.
- Lors de l'utilisation d'une connexion embrochable (par ex. connecteur PA de Weidmüller), il faut veiller à ce que les exigences pour la catégorie correspondante et sa température de service soient respectées.
- Monter le thermomètre de manière à ce que l'apparition d'une source d'inflammation due à un choc ou une friction entre le métal/l'acier et le boîtier soit exclue même dans de rares cas.

⚠ AVERTISSEMENT

Atmosphère explosible

▶ L'appareil ne doit pas être ouvert sous tension dans une atmosphère explosible (il faut veiller à maintenir le degré de protection du boîtier de IP6X en cours de fonctionnement.)

Conseils de sécurité : Sécurité intrinsèque

- Tenir compte des conseils d'installation et de sécurité du manuel de mise en service.
- Installer d'après les instructions du fabricant et les normes et règles en vigueur (CEI/EN 60079-14).
- Tenir compte des conseils de sécurité pour le transmetteur utilisé.
- Lors de températures ambiantes supérieures à 70 °C il convient d'utiliser des câbles, conducteurs, entrées de câble et joints résistant à la chaleur et dont la température de service dépasse de +5 K la température ambiante.
- Eviter la formation d'une couche de poussière sur le boîtier par un nettoyage régulier.
- L'affichage, de type TID10, ne doit être installé qu'en zone 1 (EPL Gb) ou zone 2 (EPL Gc).
- En cas de connexion des appareils à des circuits à sécurité intrinsèque de la catégorie ib, le mode de protection est modifié comme suit : Ex ib IIC
- Lors du raccordement d'un circuit à sécurité intrinsèque ib, ne pas utiliser le capteur sans doigt de gant selon CEI 60079-26 en zone 0.
- Lors du raccordement d'inserts de mesure doubles, il faut veiller à avoir le même potentiel pour la ligne d'équipotentialité.
- Les inserts de mesure avec un diamètre de 3 mmou les inserts mis à la terre, par ex. type TPC100, doivent être reliés à la ligne d'équipotentialité.
- Pour les inserts de mesure avec un diamètre de 3 mm ou les inserts mis à la terre, par ex. type TPC100, il faut utiliser une alimentation à sécurité intrinsèque avec séparation galvanique.

Conseils de sécurité : Zone 0

- Les mélanges explosifs vapeur - air ne sont autorisés à se produire que sous conditions atmosphériques :
  - −20 °C ≤ Ta ≤ +60 °C
  - −0,8 bar ≤ p ≤ 1,1 bar
- En l'absence de mélanges explosifs ou si des mesures de protection selon EN1127-1 ont été prises, les appareils peuvent également êre utilisés en dehors des conditions atmosphériques selon les spécifications du fabricant.
- Préférer des matériels électriques associés avec séparation galvanique entre les circuits à sécurité intrinsèque et ceux sans sécurité intrinsèque.

Conseils de sécurité : Conditions particulières

- Monter le thermomètre de manière à ce que l'apparition d'une source d'inflammation due à un choc ou une friction entre le métal/l'acier et le boîtier soit exclue même dans de rares cas.
- Eviter le chargement électrostatique de la surface synthétique à la tête de raccordement TA20B.
- Eviter le chargement électrostatique du boîtier en matière synthétique (ne pas frotter pour sécher).

Conseils de sécurité : Paroi de séparation de zone

Le thermomètre doit être installé dans une paroi de séparation de zone conformément à CEI 60079-26, rapportée à l'application finale.

Tableaux des températures

Matériel électrique associé à sécurité intrinsèque avec valeurs de raccordement électriques maximales, valeurs typiques des transmetteurs intégrés :

Transmetteurs	Ui	Ii	Pi	Ci	Li
TMT181	30 V	100 mA	760 mW	0	0
TMT182			750 mW		
TMT82		130 mA	800 mW		
TMT84, TMT85	17,5 V	500 mA	5,5 W	5 nF	-
sans	30 V	140 mA	1000 mW	1 nF	1 mH

Catégorie	Mode de protection (ATEX)	Type
II 1D	Ex ia IIIC T85 °C...T450 °C Da	TR10, TR11, TR12, TR13, TR15, TR24, TR45, TR47, TR88 TR61, TR62, TR63, TR65, TR66 TC10, TC12, TC13, TC15, TC88, TEC420 TC61, TC62, TC63, TC65, TC66
II 1/2D	Ex ia IIIC T85 °C...T450 °C Da/Db	
II 1G	Ex ia IIC T6...T1 Ga	
II 1/2G	Ex ia IIC T6...T1 Ga/Gb	

Mode de protection (CEI)	Type
Ex ia IIC T6...T1 Ga/Gb	TR10, TR11, TR12, TR13, TR15, TR24, TR45, TR47, TR88 TR61, TR62, TR63, TR65, TR66 TC10, TC12, TC13, TC15, TC88, TEC420 TC61, TC62, TC63, TC65, TC66

Relation entre la température ambiante et de process et la classe de température de l'appareil avec transmetteur intégré :

Type	Transmetteur installé	Classe de température	Température ambiante (boîtier)	Température de surface maximale (boîtier)
TR1x TC1x	TMT181 TMT182 TMT84/TMT85	T6	−40 °C ≤ Ta ≤ +55 °C	T85 °C
		T5	−40 °C ≤ Ta ≤ +70 °C	T100 °C
		T4	−40 °C ≤ Ta ≤ +85 °C	T135 °C
	TMT82	T6	−40 °C ≤ Ta ≤ +58 °C	T85 °C
		T5	−40 °C ≤ Ta ≤ +75 °C	T100 °C
		T4	−40 °C ≤ Ta ≤ +85 °C	T135 °C
	TMT8x avec afffichage	T6	−40 °C ≤ Ta ≤ +55 °C	T85 °C
		T5	−40 °C ≤ Ta ≤ +70 °C	T100 °C
		T4	−40 °C ≤ Ta ≤ +85 °C	T135 °C

Type	Transmetteur installé	Diamètre insert	Température du process	Classe de température/ température de surface maximale (capteur)
TR1x TC1x	TMT18x TMT8x	3 mm, 3 mm dual ou 6 mm dual	−50 °C ≤ Tp ≤ +66 °C	T6/T85 °C
			−50 °C ≤ Tp ≤ +81 °C	T5/T100 °C
			−50 °C ≤ Tp ≤ +116 °C	T4/T135 °C
			−50 °C ≤ Tp ≤ +181 °C	T3/T200 °C
			−50 °C ≤ Tp ≤ +276 °C	T2/T300 °C
			−50 °C ≤ Tp ≤ +426 °C	T1/T450 °C
		6 mm	−50 °C ≤ Tp ≤ +73 °C	T6/T85 °C
			−50 °C ≤ Tp ≤ +88 °C	T5/T100 °C
			−50 °C ≤ Tp ≤ +123 °C	T4/T135 °C
			−50 °C ≤ Tp ≤ +188 °C	T3/T200 °C
			−50 °C ≤ Tp ≤ +283 °C	T2/T300 °C
			−50 °C ≤ Tp ≤ +433 °C	T1/T450 °C

Relation entre la température ambiante et de process et la classe de température de l'appareil sans transmetteur intégré (bornier) :

Diamètre insert	Classe de température/ température de surface maximale	Tp (Process) - température du process maximale permise (capteur)				
		Pi ≤ 50 mW	Pi ≤ 100 mW	Pi ≤ 200 mW	Pi ≤ 500 mW	Pi ≤ 650 mW
3 mm, 3 mm dual ou 6 mm dual	T1/T450 °C	426 °C	415 °C	396 °C	343 °C	333 °C
	T2/T300 °C	276 °C	265 °C	246 °C	193 °C	183 °C
	T3/T200 °C	181 °C	170 °C	151 °C	98 °C	88 °C
	T4/T135 °C	116 °C	105 °C	86 °C	33 °C	23 °C
	T5/T100 °C	81 °C	70 °C	51 °C	−2 °C	−12 °C
	T6/T85 °C	66 °C	55 °C	36 °C	−17 °C	−27 °C
6 mm	T1/T450 °C	433 °C	428 °C	420 °C	398 °C	388 °C
	T2/T300 °C	283 °C	278 °C	270 °C	248 °C	238 °C
	T3/T200 °C	188 °C	183 °C	175 °C	153 °C	143 °C
	T4/T135 °C	123 °C	118 °C	110 °C	88 °C	78 °C
	T5/T100 °C	88 °C	83 °C	75 °C	53 °C	43 °C
	T6/T85 °C	73 °C	68 °C	60 °C	38 °C	28 °C

Diamètre insert	Classe de température/ température de surface maximale	Tp (Process) - température du process maximale permise (capteur)			Ta - température ambiante (boîtier) [1])
		Pi ≤ 750 mW	Pi ≤ 800 mW	Pi ≤ 1000 mW	
3 mm, 3 mm dual or 6 mm dual	T1/T450 °C	320 °C	312 °C	280 °C	−40 °C ≤ Ta ≤ +130 °C
	T2/T300 °C	170 °C	162 °C	130 °C	
	T3/T200 °C	75 °C	62 °C	30 °C	
	T4/T135 °C	10 °C	2 °C	−30 °C	−40 °C ≤ Ta ≤ +116 °C
	T5/T100 °C	−25 °C	−33 °C	-	−40 °C ≤ Ta ≤ +81 °C
	T6/T85 °C	−40 °C	-	-	−40 °C ≤ Ta ≤ +66 °C
6 mm	T1/T450 °C	381 °C	377 °C	361 °C	−40 °C ≤ Ta ≤ +130 °C
	T2/T300 °C	231 °C	227 °C	211 °C	
	T3/T200 °C	136 °C	127 °C	111 °C	

Diamètre insert	Classe de température/ température de surface maximale	Tp (Process) - température du process maximale permise (capteur)			Ta - température ambiante (boîtier) [1])
		Pi ≤ 750 mW	Pi ≤ 800 mW	Pi ≤ 1 000 mW	
	T4/T135 °C	71 °C	67 °C	51 °C	−40 °C ≤ Ta ≤ +123 °C
	T5/T100 °C	36 °C	32 °C	16 °C	−40 °C ≤ Ta ≤ +88 °C
	T6/T85 °C	21 °C	17 °C	1 °C	−40 °C ≤ Ta ≤ +73 °C

1) Lors de l'utilisation d'un boîtier TA20R ou TA21E, tenir compte des températures maximales admissibles (TI072t).

Détermination de la température de process pour Pi ≤ 50 mW :

Insert diameter	Résistance thermique (Rth) pour Pi ≤ 50 mW	Formule de calcul pour la température de process (Tp)
3 mm, 3 mm dual ou 6 mm dual	274K/W	$Tp < T_{class}$ [1]-Tol. [2]Tol.-(Rth x P_0 [3])
	144K/W	
6 mm		

1) Indication classe de température, par ex. 85 °C (K) pour T6
2) Tolérance selon CEI60079-0, chapitre 26.5.1.3 : 5 K pour T6, T5, T4 et T3 10 K pour T2 et T1
3) P_0 de l'entrée température à sécurité intrinsèque (par ex. circuit capteur TMT182, P_0 = 6,6 mW)

Exemple de calcul pour T6 et insert de mesure 6 mm : $Tp < T_{Classe}$ - Tol. - (Rth x P_0)

Tp < 85 °C (K) - 5K - (144K/W x 6,6 mW)

Tp < 79,04 °C

www.addresses.endress.com

Endress+Hauser
People for Process Automation

A.6.3 Declaration of Conformity

EG/EU-Konformitätserklärung
EC/EU-Declaration of Conformity
Déclaration CE/UE de Conformité

Endress+Hauser
People for Process Automation

CE

Company **Endress+Hauser Wetzer GmbH+Co. KG, Obere Wank 1, 87484 Nesselwang**

erklärt als Hersteller in alleiniger Verantwortung, dass das Produkt
declares as manufacturer under sole responsibility, that the product
déclare sous sa seule responsabilité en qualité de fabricant que le produit

Product **Thermometer**
TR10, TR11, TR12, TR13, TR15, TR24, TR45, TR47, TR88, TR61, TR62, TR63, TR65, TR66, TST310, TM411, TM412
TC10, TC12, TC13, TC15, TC88, TEC420, TC61, TC62, TC63, TC65, TC66, TSC310
Messeinsatz/Insert
TPR100, TS111, TPC100, TM211

Regulations den folgenden Europäischen Richtlinien entspricht:
conforms to following European Directives:
est conforme aux prescription des Directives Européennes suivantes :

	gültig bis/valid until/date d'expiration 19.04.2016	gültig ab/valid from/valide à partir du 20.04.2016
EMC	2004/108/EC (L 390/24)	2014/30/EU (L 96/79)
ATEX	94/9/EC (L 100/1)	2014/34/EU (L 96/309)

Standards angewandte harmonisierte Normen oder normative Dokumente:
applied harmonized standards or normative documents:
normes harmonisées ou documents normatifs appliqués :

EN 61326-1	(2013)	EN 60079-0	(2012)	+ Cor. (2013)	
EN 61326-2-3	(2013)	EN 60079-11	(2012)		
EN 61326-2-5	(2013)	EN 60079-26	(2007)	EN 61010-1	(2010)

Die in der zugehörigen EU-Baumusterprüfbescheinigung DEKRA 12ATEX0161 X genannten Normen wurden durch neue Ausgaben ersetzt. Die Änderungen in den neuen Normen betreffen unsere Produkte nicht. Wir erklären für das genannte Produkt auch die Übereinstimmung mit den Anforderungen der neuen Normenausgabe.
The standards associated to the EU-certificate of conformity DEKRA 12ATEX0161 X have been replaced by new editions. The modification in the new standards does not apply to our products. We therefore declare the conformity to the stated product with the requirements of the new issued standards.
Les normes associées au certificat CE de conformité DEKRA 12ATEX0161 X ont été remplacées par de nouvelles éditions. Les modifications dans les nouvelles normes ne s'appliquent pas à nos produits. Nous déclarons donc la conformité du produit cité avec les exigences des nouvelles éditions des normes.

Certification EG-Baumusterprüfbescheinigung Nr. / EC-Type Examination Certificate No. / Numéro de l'attestation d'examen CE de type — DEKRA 12ATEX0161 X

Ausgestellt von/issued by/délivré par — DEKRA Certification B.V. (0344)
Qualitätssicherung/Quality assurance/Système d'assurance qualité — TÜV Nord Cert (0044)

Nesselwang, 20.01.2016
Endress+Hauser Wetzer GmbH+Co. KG

Harald Hertweck
Managing Director

EC_00177_01.16 71316067

EU-Konformitätserklärung
EU-Declaration of Conformity
Déclaration UE de Conformité

Endress+Hauser
People for Process Automation

CE

Company **Endress+Hauser Wetzer GmbH+Co. KG, Obere Wank 1, 87484 Nesselwang**

erklärt als Hersteller in alleiniger Verantwortung, dass das Produkt
declares as manufacturer under sole responsibility, that the product
déclare sous sa seule responsabilité en qualité de fabricant que le produit

Product **Product name**

Temperature Thermometer:
DTT31, DTT31L, DTT35, DTT35L, GPTL, MLTTS00, MLTTS01, OTR31, OTR35, OTR90, OTR91, OTR92, OTR93, OTR94, OTR95, OTR96, T13, T14, T15, T53, T54, T55, TAF11, TAF12D, TAF12S, TAF12T, TAF16, TC10, TC12, TC13, TC15, TC61, TC62, TC63, TC65, TC66, TC88, TEC420, TH11, TH12, TH13, TH14, TH15, TH17, TH18, TH27, TH51, TH52, TH53, TH54, TH55, TH56, TM401, TM411, TMR31, TMR31L, TMR35, TMR35L, TMT142C, TMT142R, TMT162C, TMT162R, TMT470L, TR10, TR11, TR12, TR13, TR15, TR24, TR25, TR61, TR62, TR63, TR65, TR66, TR88, TSC310, TSM187, TSM487, TST187, TST310, TST40N, TST410, TST414, TST41N, TST434, TST487, TST602, TST90, TTR31, TTR35

Regulations den folgenden Europäischen Richtlinien entspricht:
conforms to following European Directives:
est conforme aux prescription des Directives Européennes suivantes :

RoHS 2011/65/EU (L 174/88)

Standards angewandte harmonisierte Normen oder normative Dokumente:
applied harmonized standards or normative documents:
normes harmonisées ou documents normatifs appliqués :

EN 50581 (2012)

Nesselwang, 22.05.2017
Endress+Hauser Wetzer GmbH+Co. KG

Harald Hertweck
Managing Director

i.V. Helmut Kalteis
RoHS-Officer

EC_00568_01.17 1/1

A.6.4 EC type-examination certificate

CERTIFICATE

(1) **EU-Type Examination**

(2) **Equipment or protective systems intended for use in potentially explosive atmospheres - Directive 2014/34/EU**

(3) EU-Type Examination Certificate Number: **DEKRA 12ATEX0161 X** Issue Number: **2**

(4) Product: **RTD-Thermometers, Type TR..-…,**
Thermocouple-Thermometers, Type TC..-… and TEC420
RTD Inserts, Type TPR100 and iTHERM, Type TS111
Thermocouple Inserts, Type TPC100
Cable sensor, Type TSC310 and TST310
RTD and Thermocouple Sensors iTHERM, Type TM211
Temperature Assembly iTHERM Type TM41.-…

(5) Manufacturer: **Endress+Hauser Wetzer GmbH**

(6) Address: **Obere Wank 1, 87484 Nesselwang, Germany**

(7) This product and any acceptable variation thereto is specified in the schedule to this certificate and the documents therein referred to.

(8) DEKRA Certification B.V., Notified Body number 0344 in accordance with Article 17 of Directive 2014/34/EU of the European Parliament and of the Council, dated 26 February 2014, certifies that this product has been found to comply with the Essential Health and Safety Requirements relating to the design and construction of products intended for use in potentially explosive atmospheres given in Annex II to the Directive.

The examination and test results are recorded in confidential test report number NL/DEK/ExTR12.0058/01.

(9) Compliance with the Essential Health and Safety Requirements has been assured by compliance with:

EN 60079-0 : 2012 + A11 : 2013 **EN 60079-11 : 2012** **EN 60079-26 : 2015**

except in respect of those requirements listed at item 18 of the Schedule.

(10) If the sign "X" is placed after the certificate number, it indicates that the product is subject to the Specific Conditions of Use specified in the schedule to this certificate.

(11) This EU-Type Examination Certificate relates only to the design and construction of the specified product. Further requirements of the Directive apply to the manufacturing process and supply of this product. These are not covered by this certificate.

(12) The marking of the product shall include the following:

II 1 G Ex ia IIC T6...T1 Ga
II 1/2 G Ex ia IIC T6...T1 Ga/Gb
II 1 D Ex ia IIIC T85 °C...T450 °C Da
II 1/2 D Ex ia IIIC T85 °C...T450 °C Da/Db

Date of certification: 29 November 2018

DEKRA Certification B.V.

R. Schuller
Certification Manager

Page 1/5

© Integral publication of this certificate and adjoining reports is allowed. This Certificate may only be reproduced in its entirety and without any change.

DEKRA Certification B.V. Meander 1051, 6825 MJ Arnhem P.O. Box 5185, 6802 ED Arnhem The Netherlands
T +31 88 96 83000 F +31 88 96 83100 www.dekra-certification.com Registered Arnhem 09085396

(13) **SCHEDULE**

(14) **to EU-Type Examination Certificate DEKRA 12ATEX0161 X** Issue No. **2**

(15) **Description**

The Insert for RTD Thermometers, Type TPR100-… and iTHERM Type TS111-..., the Insert for Thermocouple Thermometers, Type TPC100-…, the Cable Thermometer, Type TST310-… and Type TSC310-… and the RTD or Thermocouple Temperature Sensors, iTHERM Type TM211 are used to convert the temperature of a process medium into an electrical signal.
The insert is used with a mounting head, made of aluminium, stainless steel or conductive plastic. The mounting head contains either a temperature transmitter or connection terminals for connection of the RTD or TC sensor to an external temperature transmitter.

The Temperature Sensors Type TR..-…, Type TC..-… and Type TEC420 and iTHERM Type TM411 and Type TM412 consist of RTD or Thermocouple insert Type TPR100-…, Type TPC100-… or Type TS111 and a mounting head with a thermowell.

The sensor is a single or dual Pt100 resistance element (wire wound or thin film) or a thermocouple element, mounted in a stem with a diameter of 3 mm or 6 mm and a length depending on the application.
The sensor can be used in a 3 or a 4 wire measurement system or in a dual 2 wire or 3 wire measurement system if a dual temperature sensor element is mounted.

The mounting head, including the cable entry device provides a degree of protection of at least IP2X in accordance with EN 60529 for application in explosive gas atmospheres.

The mounting head, including the cable entry device provides a degree of protection of at least IP6X in accordance with EN 60529 for application in explosive dust atmospheres.

Thermal data

For each dual or single element, the temperature class T6…T1 and the maximum surface temperature T85 °C…T450 °C is depending on the process temperature and the Supply/output circuit power P_i, in accordance with the following tables:

Insert diameter	Temperature class/max temperature T	P_i ≤ 50 mW	P_i ≤ 100 mW	P_i ≤ 200 mW	P_i ≤ 500 mW
		Max. allowed process temperature [°C]			
3 mm, 3 mm (dual) or 6 mm (dual)	T1/450 °C	426	415	396	343
	T2/300 °C	276	265	246	193
	T3/200 °C	181	170	151	98
	T4/135 °C	116	105	86	33
	T5/ 95 °C	81	70	51	-2
	T6/ 85 °C	66	55	36	-17
6 mm	T1/450 °C	433	428	420	398
	T2/300 °C	283	278	270	248
	T3/200 °C	188	183	175	153
	T4/135 °C	123	118	110	88
	T5/ 95 °C	88	83	75	53
	T6/ 85 °C	73	68	60	38

DEKRA

(13) **SCHEDULE**

(14) **to EU-Type Examination Certificate DEKRA 12ATEX0161 X** Issue No. **2**

Insert diameter	Temperature class/max temperature T	P_i ≤ 650 mW	P_i ≤ 750 mW	P_i ≤ 800 mW	P_i ≤ 1000 mW
		Max. allowed process temperature [°C]			
3 mm, 3 mm (dual) or 6 mm (dual)	T1/450 °C	333	320	312	280
	T2/300 °C	183	170	162	130
	T3/200 °C	88	75	62	30
	T4/135 °C	23	10	2	-30
	T5/ 95 °C	-12	-25	-33	
	T6/ 85 °C	-27	-40		
6 mm	T1/450 °C	388	381	377	361
	T2/300 °C	238	231	227	211
	T3/200 °C	143	136	127	111
	T4/135 °C	78	71	67	51
	T5/ 95 °C	43	36	32	16
	T6/ 85 °C	28	21	17	1

The ambient temperature at the mounting head may be directly influenced by the process temperature, but is restricted to the range -40 °C ... +130 °C, or by the specifications of the applied integral temperature transmitter and the optional display, if appropriate.

For thermometers with two mounted head transmitters the allowed ambient temperature is 10K lower than each head transmitter's certified ambient temperature.

For thermocouple inserts, the temperature class T6…T1 and the maximum surface temperature T85 °C…T450 °C are equal to the process temperature.

For further details regarding the temperature classification respectively the maximum surface temperature and the maximum process and ambient temperatures, allowed for the different versions and in relation to the maximum input power P_i, refer to the instruction manual.

(13) **SCHEDULE**

(14) **to EU-Type Examination Certificate DEKRA 12ATEX0161 X** Issue No. **2**

Electrical data

Supply/output circuit:
for insert options with terminal block, flying leads or thermometer, all types:
in type of protection intrinsic safety Ex ia IIC and Ex ia IIIC, only for connection to a certified intrinsically safe circuit, with the following maximum values:
U_i = 30 V; I_i = 140 mA; P_i = 1 W.

C_i and L_i, for types TS111/TPx100:

Sensor type	Insertion Length IL		Flying leads		Terminal block	
	C_i [F/m]	L_i [H/m]	C_i [F]	L_i [H]	C_i [F]	L_i [H]
Single	2,00E-10	1,00E-06	1,96E-11	9,80E-08	4,60E-12	2,30E-08
Dual	4,00E-10	2,00E-06	3,92E-11	1,96E-07	9,20E-12	4,60E-08

Calculation formula for options with flying leads or terminal block only:

$C_i = C_{i\ \text{Insertion length IL}} \times IL + C_{i\ \text{Flying leads}}$

$L_i = L_{i\ \text{Insertion length IL}} \times IL + L_{i\ \text{Flying leads}}$

$C_i = C_{i\ \text{Insertion length IL}} \times IL + C_{i\ \text{Terminal block}}$

$L_i = L_{i\ \text{Insertion length IL}} \times IL + L_{i\ \text{Terminal block}}$

C_i and L_i, for types TSx310:

Sensor type	Insertion Length NL		Connection		Length Extension L	
	C_i [F/m]	L_i [H/m]	C_i [F]	L_i [H]	C_i [F/m]	L_i [H/m]
Single	2,00E-10	1,00E-06	2,50E-11	1,25E-07	2,00E-10	1,00E-06
Dual	4,00E-10	2,00E-06	5,00E-11	2,50E-07	4,00E-10	2,00E-06

Calculation formula for cable thermometer:

$C_i = C_{i\ \text{Sensor length NL}} \times NL + C_{i\ \text{connection}} + C_{i\ \text{Cable L}} \times L$

$L_i = L_{i\ \text{Sensor length NL}} \times NL + L_{i\ \text{connection}} + L_{i\ \text{Cable L}} \times L$

Refer to the tables above for the relation between P_i and the maximum process temperature, the temperature class and the maximum surface temperature.

From the safety point of view, the circuit of versions of the following temperature sensors and inserts shall be considered to be connected to ground (for details, the instruction manual, provided with the equipment, shall be observed):
- Type TPC100-..., with diameter 3 mm, single or dual
- Type TSC310-..., with diameter 1.5 mm, 2 mm, 3 mm or 4,5 mm, single or dual
- Type TST310-... and Type TM211, with diameter 3 mm.

For Temperature Sensors with a mounted intrinsically safe Temperature Transmitter, the electrical parameters of the transmitter shall be observed.

DEKRA

(13) **SCHEDULE**

(14) **to EU-Type Examination Certificate DEKRA 12ATEX0161 X** Issue No. **2**

Installation instructions

The instructions provided with the product shall be followed in detail to assure safe operation.

(16) **Report Number**

No. NL/DEK/ExTR12.0058/01.

(17) **Specific conditions of use**

If the mounting head of the Temperature Sensor is made of aluminium and if it is mounted in an area where the use of category 1 G apparatus is required, the head must be installed such, that, even in the event of rare incidents, ignition sources due to impact and friction sparks are excluded.

For Temperature Sensors Type TST310-…, TSC310-… and TM211, if intended for use in explosive gas atmospheres where the use of apparatus of category 1 G is required, electrostatic charges on the cable shall be avoided.

(18) **Essential Health and Safety Requirements**

Covered by the standards listed at item (9).

(19) **Test documentation**

As listed in Report No. NL/DEK/ExTR12.0058/01.

(20) **Certificate history**

Issue 1 -	215360400	initial certificate
Issue 2 -	223137300	1. Changes in nomenclature and features
		2. Assessed per EN 60079-0:2012+A11 and EN 60079-26:2015
		3. Minor constructional changes

A.7 Thermometer gas-acutuated

Name	Data
Designation	*Thermometer*
Type	F73
Number	
Type of manual	*Technical documentation*
Manufacturer	WIKA Alexander Wiegand SE & Co. KG

Place of installation	TAG No. AERZEN	Link
Blower oil system	3.2.3.X31 3.2.4.X00	
Gearbox oil system 50 L	3.2.4.X20 3.2.4.X51	linktarget doesn't exist but @y.link.required='true'

A.7.1 Operating instructions

Operating instructions
Betriebsanleitung
Mode d'emploi
Manual de instrucciones

Gas-actuated thermometer, models 73, 74, 75	EN
Gasdruckthermometer, Typen 73, 74, 75	DE
Thermomètre à dilatation de gaz, types 73, 74, 75	FR
Termómetro de dilatación de gas, modelos 73, 74, 75	ES

Model F73.100 Model R74.100 Model R75.100

WIKA
Part of your business

EN	Operating instructions models 73, 74, 75	Page	3 - 24
DE	Betriebsanleitung Typen 73, 74, 75	Seite	25 - 46
FR	Mode d'emploi types 73, 74, 75	Page	47 - 68
ES	Manual de instrucciones modelos 73, 74, 75	Página	69 - 89

© 10/2010 WIKA Alexander Wiegand SE & Co. KG
All rights reserved. / Alle Rechte vorbehalten.
WIKA® is a registered trademark in various countries.
WIKA® ist eine geschützte Marke in verschiedenen Ländern.

Prior to starting any work, read the operating instructions!
Keep for later use!

Vor Beginn aller Arbeiten Betriebsanleitung lesen!
Zum späteren Gebrauch aufbewahren!

Lire le mode d'emploi avant de commencer toute opération !
A conserver pour une utilisation ultérieure !

¡Leer el manual de instrucciones antes de comenzar cualquier trabajo!
¡Guardar el manual para una eventual consulta!

12099431.07 11/2018 EN/DE/FR/ES

EN

Contents

1.	General information	4
2.	Design and function	5
3.	Safety	6
4.	Transport, packaging and storage	11
5.	Commissioning, operation	12
6.	Faults	16
7.	Maintenance and cleaning	18
8.	Dismounting, return and disposal	20
9.	Specifications	23

12099431.07 11/2018 EN/DE/FR/ES

EN

1. General information

1. General information

- The gas-actuated thermometers described in the operating instructions have been manufactured using state-of-the-art technology. All components are subject to stringent quality and environmental criteria during production. Our management systems are certified to ISO 9001 and ISO 14001.
- These operating instructions contain important information on handling the instrument. Working safely requires that all safety instructions and work instructions are observed.
- Observe the relevant local accident prevention regulations and general safety regulations for the instrument's range of use.
- The operating instructions are part of the product and must be kept in the immediate vicinity of the instrument and readily accessible to skilled personnel at any time. Pass the operating instructions on to the next operator or owner of the instrument.
- Skilled personnel must have carefully read and understood the operating instructions prior to beginning any work.
- The general terms and conditions contained in the sales documentation shall apply.
- Subject to technical modifications.
- Further information:
  - Internet address: www.wika.de / www.wika.com
  - Relevant data sheet: TM 73.01, TM 74.01, TM 75.01
  - Application consultant: Tel.: +49 9372 132-0
    Fax: +49 9372 132-406
    info@wika.de

12099431.07 11/2018 EN/DE/FR/ES

2. Design and function

2. Design and function

EN

2.1 Overview

Example: Model F73.100 Example: Model R74.100

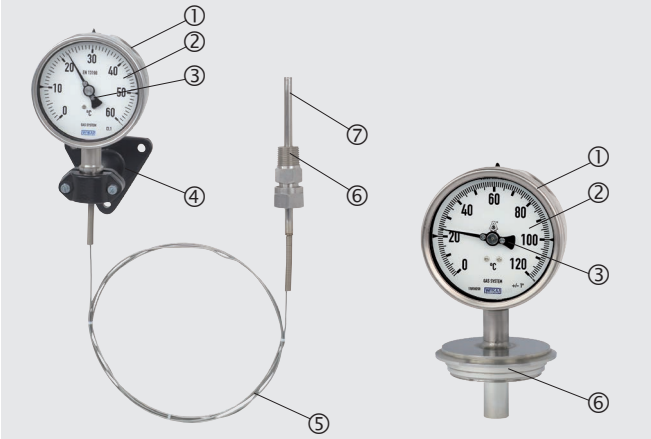

① Case
② Dial
③ Pointer
④ Instrument mounting bracket
⑤ Capillary
⑥ Process connection
⑦ Stem

2.2 Description

The gas-actuated thermometer consists of a stem, capillary and Bourdon tube in the case. These parts are combined to form a single unit. The entire measuring system is filled with an inert gas under pressure.

Any change in temperature causes a change in internal pressure in the stem. The pressure deforms the measuring tube and the deflection is transferred to the pointer via a movement.

12099431.07 11/2018 EN/DE/FR/ES

EN

2. Design and function / 3. Safety

Variations in the ambient temperature acting on the case are compensated for by a bimetal element mounted between the movement and the measuring tube.

Scale ranges with accuracy class 1 per EN 13190
from -200 ... +700 °C

2.3 Scope of delivery

Cross-check scope of delivery with delivery note

3. Safety

3.1 Explanation of symbols

WARNING!
... indicates a potentially dangerous situation that can result in serious injury or death, if not avoided.

CAUTION!
... indicates a potentially dangerous situation that can result in light injuries or damage to property or the environment, if not avoided.

DANGER!
... identifies hazards caused by electrical power. Should the safety instructions not be observed, there is a risk of serious or fatal injury.

WARNING!
... indicates a potentially dangerous situation that can result in burns, caused by hot surfaces or liquids, if not avoided.

12099431.07 11/2018 EN/DE/FR/ES

3. Safety

Information
... points out useful tips, recommendations and information for efficient and trouble-free operation.

EN

3.2 Intended use

The gas-actuated thermometers are mainly used in the process industry to monitor process temperatures.

The instruments are not approved for use in hazardous areas!

The instruments have been designed and built solely for the intended use described here, and may only be used accordingly.

The manufacturer shall not be liable for claims of any type based on operation contrary to the intended use.

3.3 Improper use

WARNING!
Injuries through improper use
Improper use of the instrument can lead to hazardous situations and injuries.

- ▶ Refrain from unauthorised modifications to the instrument.
- ▶ Do not use the instrument within hazardous areas.
- ▶ Do not use the instrument with abrasive or viscous media.

Any use beyond or different to the intended use is considered as improper use.

Do not use this instrument in safety or emergency stop devices.

12099431.07 11/2018 EN/DE/FR/ES

EN

3. Safety

3.4 Responsibility of the operator

The instrument is used in the industrial sector. The operator is therefore responsible for legal obligations regarding safety at work.

The safety instructions within these operating instructions, as well as the safety, accident prevention and environmental protection regulations for the application area must be maintained.

The operator is obliged to maintain the product label in a legible condition.

To ensure safe working on the instrument, the operating company must ensure

- that suitable first-aid equipment is available and aid is provided whenever required.
- that the operating personnel are regularly instructed in all topics regarding work safety, first aid and environmental protection and know the operating instructions and in particular, the safety instructions contained therein.
- that the instrument is suitable for the particular application in accordance with its intended use.

3.5 Personnel qualification

WARNING!
Risk of injury should qualification be insufficient
Improper handling can result in considerable injury and damage to equipment.

► The activities described in these operating instructions may only be carried out by skilled personnel who have the qualifications described below.

Skilled personnel
Skilled personnel, authorised by the operator, are understood to be personnel who, based on their technical training, knowledge of measurement and control technology and on their experience and knowledge of country-specific regulations, current standards and directives, are capable of carrying out the work described and independently recognising potential hazards.

12099431.07 11/2018 EN/DE/FR/ES

3. Safety

EN

Operating personnel
The personnel trained by the operator are understood to be personnel who, based on their education, knowledge and experience, are capable of carrying out the work described and independently recognising potential hazards.

Special operating conditions require further appropriate knowledge, e.g. of aggressive media.

3.6 Personal protective equipment

The personal protective equipment is designed to protect the skilled personnel from hazards that could impair their safety or health during work. When carrying out the various tasks on and with the instrument, the skilled personnel must wear personal protective equipment.

The requisite personal protective equipment must be provided by the operating company.

12099431.07 11/2018 EN/DE/FR/ES

EN

3. Safety

3.7 Labelling, safety marks

Product label (example)

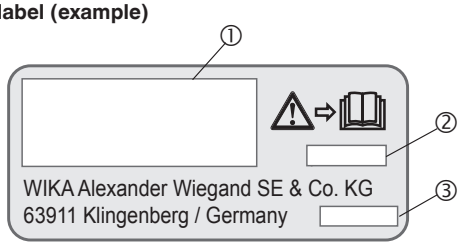

① Model
② Year of manufacture
③ Serial number

Before mounting and commissioning the instrument, ensure you read the operating instructions!

Do not fill the instruments with filling liquid subsequently.

12099431.07 11/2018 EN/DE/FR/ES

4. Transport, packaging and storage

4. Transport, packaging and storage

EN

4.1 Transport

Check the instrument for any damage that may have been caused by transport.
Obvious damage must be reported immediately.

CAUTION!
Damage through improper transport
With improper transport, a high level of damage to property can occur.

- ▶ When unloading packed goods upon delivery as well as during internal transport, proceed carefully and observe the symbols on the packaging.
- ▶ With internal transport, observe the instructions in chapter 4.2 “Packaging and storage”.

If the instrument is transported from a cold into a warm environment, the formation of condensation may result in instrument malfunction. Before putting it back into operation, wait for the instrument temperature and the room temperature to equalise.

4.2 Packaging and storage

Do not remove packaging until just before mounting.
Keep the packaging as it will provide optimum protection during transport (e.g. change in installation site, sending for repair).

Permissible conditions at the place of storage:

- Temperature limits for storage and transport
  -50 … +70 °C (-58 ... +158 °F) without liquid damping
  -40 … +70 °C (-40 ... +158 °F) with liquid damping
- Humidity: 35 ... 85 % relative humidity (non-condensing)

Avoid exposure to the following factors:

- Direct sunlight or proximity to hot objects
- Mechanical vibration, mechanical shock (putting it down hard)
- Soot, vapour, dust and corrosive gases
- Hazardous environments, flammable atmospheres

12099431.07 11/2018 EN/DE/FR/ES

EN

4. Transport ... / 5. Commissioning, operation

Store the instrument in its original packaging in a location that fulfils the conditions listed above. If the original packaging is not available, pack and store the instrument as described below:

1. Wrap the instrument in an antistatic plastic film.
2. Place the instrument, along with the shock-absorbent material, in the packaging.
3. If stored for a prolonged period of time (more than 30 days), place a bag containing a desiccant inside the packaging.

5. Commissioning, operation

Personnel: Skilled personnel
Tools: Suitable spanner

WARNING!
Physical injuries and damage to property and the environment caused by hazardous media
Upon contact with hazardous media (e.g. oxygen, acetylene, flammable or toxic substances), harmful media (e.g. corrosive, toxic, carcinogenic, radioactive), and also with refrigeration plants and compressors, there is a danger of physical injuries and damage to property and the environment.
Should a failure occur, aggressive media with extremely high temperature and under high pressure or vacuum may be present at the instrument.

- ▶ For these media, in addition to all standard regulations, the appropriate existing codes or regulations must also be followed.

When screwing the instrument in, the force required to do this must not be applied through the case, but only through the spanner flats provided for this purpose, and using a suitable tool.

12099431.07 11/2018 EN/DE/FR/ES

5. Commissioning, operation

EN

- If possible, the entire length of the stem should be exposed to the temperature being measured. However, at least the length of the active part that corresponds to the length of the gas expansion vessel (active length).
- In pipelines or other measuring points, the temperature probe must be positioned as far towards the flow as possible.
- Errors in thermal conduction occur if the area where the temperature is to be measured is so small, that the mass of the temperature probe acts as thermal capacity. Errors in thermal conduction may also occur if the insertion depth is insufficient, if the mounting fittings are connected to a good thermal conductor (metal plate or similar) and there is a considerable difference in temperature between the measuring and mounting element temperatures.
- Mount the indicator case free from vibration. If necessary, it is possible to isolate the installation from the mounting point, e.g. by installing a flexible connection line between the measuring point and the thermometer and mounting the instrument on a suitable bracket.

If this is not possible, the following limit values must not be exceeded:
Frequency range < 150 Hz
Acceleration < 0.5 g (5 m/s^2)

After installation, set the vent valve (if available) from CLOSE to OPEN.

12099431.07 11/2018 EN/DE/FR/ES

EN

5. Commissioning, operation

The liquid filling must be checked on a regular basis.
The liquid level must not drop below 75 % of the instrument diameter.
Heavy shocks, oscillations and vibrations lead to imprecise values, increased wear in the transmission mechanism, and fractures on welded or soldered joints.

When mounting a rotatable and inclinable gas-actuated thermometer, the specific instructions must be followed. The following steps must be taken in order to set the indicator to the desired position:
1. Loosen the lock nut or union nut at the process connection.
2. Loosen the hexagon bolts and slotted screws at the swivel joint.

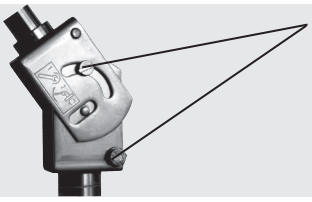

3. Position the indicator as required, tighten the hexagon bolts and slotted screws, and finally tighten the lock nut or union nut firmly.

12099431.07 11/2018 EN/DE/FR/ES

5. Commissioning, operation

5.1 Use of thermowells

EN

CAUTION!
Damage due to incorrect handling
When using thermowells, please ensure that the stem does not touch the bottom of the thermowell since, due to the different expansion coefficients of the materials, the stem may become buckled at the bottom of the thermowell.

- ► Use the correct insertion length (for the formula for the calculation of the insertion length, l_1, see the respective thermowell data sheet).

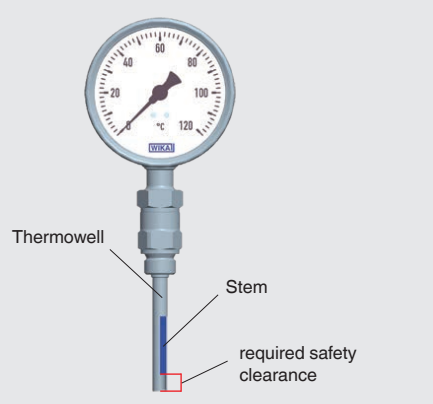

12099431.07 11/2018 EN/DE/FR/ES

EN

5. Commissioning, operation / 6. Faults

5.2 Thermal contact medium

When using thermowells, they must be filled with a thermal contact medium in order to reduce the heat transfer resistance between the outer wall of the probe and the inner wall of the thermowell. The working temperature of the thermal compound is -40 ... +200 °C.

WARNING!
Physical injuries and damage to equipment due to oil spraying out
When pouring a thermal contact medium into a hot thermowell, there is a danger of physical injuries and damage to equipment due to oil spraying out.
- ► Do not fill hot thermowells

6. Faults

Personnel: Skilled personnel or service personnel
Tools: Suitable spanner

CAUTION!
Physical injuries and damage to property and the environment
If faults cannot be eliminated by means of the listed measures, the instrument must be taken out of operation immediately.
- ► Ensure that pressure or signal is no longer present and protect against accidental commissioning.
- ► Contact the manufacturer.
- ► If a return is needed, please follow the instructions given in chapter 8.2 “Return”.

12099431.07 11/2018 EN/DE/FR/ES

EN

6. Faults

WARNING!
Physical injuries and damage to property and the environment caused by hazardous media
Upon contact with hazardous media (e.g. oxygen, acetylene, flammable or toxic substances), harmful media (e.g. corrosive, toxic, carcinogenic, radioactive), and also with refrigeration plants and compressors, there is a danger of physical injuries and damage to property and the environment.
Should a failure occur, aggressive media with extremely high temperature and under high pressure or vacuum may be present at the instrument.

- For these media, in addition to all standard regulations, the appropriate existing codes or regulations must also be followed.

For contact details see chapter 1 “General information” or the back page of the operating instructions.

Faults	Causes	Measures
The pointer does not move on rising temperature	Gas loss due to any vibrations	Remove the instrument and replace
No readability as a result of fogged/iced window	Operate at temperatures below the freezing point	Wait for the instrument temperature and the room temperature to equalise
	No filling liquid in the case	Replace with a thermometer with filling liquid
Pointer has fallen off	Too strong vibration or shock loading	Exchange the measuring instrument with a thermometer with filling
Filled instrument leaking in the region of the filling plug	Ambient temperature lower than -40 °C	Exchange with an instrument for ambient temperature down to -50 °C
Blisters in the window (laminated safety glass)	Ambient temperature too high	Isolate against radiated heat

12099431.07 11/2018 EN/DE/FR/ES

EN

6. Faults / 7. Maintenance and cleaning

Faults	Causes	Measures
Not possible to screw the instrument into the thermowell	Incorrect thread or stem diameter or thermowell stem too long	Exchange thermometer or thermowell
Dial has become coloured	Ambient temperature too high	Isolate against radiated heat
Window cracked	If necessary, secure thermometer via the case	Exchange the instrument

7. Maintenance and cleaning

Personnel: Skilled personnel or service personnel
Tools: Suitable spanner

For contact details see chapter 1 “General information” or the back page of the operating instructions.

7.1 Maintenance

These gas-actuated thermometers are maintenance-free!
The indicator should be checked once or twice every year. To do this, the instrument must be disconnected from the process and checked using a temperature calibrator.

Repairs must only be carried out by the manufacturer.

12099431.07 11/2018 EN/DE/FR/ES

7. Maintenance and cleaning

7.2 Cleaning

EN

CAUTION!
Physical injuries and damage to property and the environment
Improper cleaning may lead to physical injuries and damage to property and the environment. Residual media in the dismounted instrument can result in a risk to persons, the environment and equipment.
- ▶ Carry out the cleaning process as described below.

1. Use the requisite protective equipment.
2. Clean the instrument with a moist cloth.

CAUTION!
Damage to the instrument
Improper cleaning may lead to damage to the instrument!
- ▶ Do not use any aggressive cleaning agents.
- ▶ Do not use any hard or pointed objects for cleaning.

3. Wash or clean the dismounted instrument, in order to protect persons and the environment from exposure to residual media.

12099431.07 11/2018 EN/DE/FR/ES

8. Dismounting, return, disposal

8. Dismounting, return and disposal

EN

Personnel: Skilled personnel
Tools: Suitable spanner

WARNING!
Physical injuries and damage to property and the environment through residual media
Residual media in the dismounted instrument can result in a risk to persons, the environment and equipment.

- ▶ Observe the information in the material safety data sheet for the corresponding medium.
- ▶ Wash or clean the dismounted instrument, in order to protect persons and the environment from exposure to residual media.

8.1 Dismounting

WARNING!
Physical injuries and damage to property and the environment through residual media
Upon contact with hazardous media (e.g. oxygen, acetylene, flammable or toxic substances), harmful media (e.g. corrosive, toxic, carcinogenic, radioactive), and also with refrigeration plants and compressors, there is a danger of physical injuries and damage to property and the environment.

- ▶ Before storage of the dismounted instrument (following use) wash or clean it, in order to protect persons and the environment from exposure to residual media.
- ▶ Observe the information in the material safety data sheet for the corresponding medium.

12099431.07 11/2018 EN/DE/FR/ES

8. Dismounting, return, disposal

EN

WARNING!
Risk of burns
During dismounting there is a risk of dangerously hot media escaping.
- ▶ Let the instrument cool down sufficiently before dismounting it!

WARNING!
Physical injury
When dismounting, there is a danger from aggressive media and high pressures.
- ▶ Observe the information in the material safety data sheet for the corresponding medium.
- ▶ Only disconnect the thermometer once the system has been depressurised.

8.2 Return

Strictly observe the following when shipping the instrument:
All instruments delivered to WIKA must be free from any kind of hazardous substances (acids, bases, solutions, etc.) and must therefore be cleaned before being returned.

WARNING!
Physical injuries and damage to property and the environment through residual media
Residual media in the dismounted instrument can result in a risk to persons, the environment and equipment.
- ▶ With hazardous substances, include the material safety data sheet for the corresponding medium.
- ▶ Clean the instrument, see chapter 7.2 “Cleaning”.

When returning the instrument, use the original packaging or a suitable transport packaging.

12099431.07 11/2018 EN/DE/FR/ES

EN

8. Dismounting, return, disposal

To avoid damage:

1. Wrap the instrument in an antistatic plastic film.
2. Place the instrument, along with the shock-absorbent material, in the packaging.
   Place shock-absorbent material evenly on all sides of the transport packaging.
3. If possible, place a bag, containing a desiccant, inside the packaging.
4. Label the shipment as transport of a highly sensitive measuring instrument.

Information on returns can be found under the heading “Service” on our local website.

8.3 Disposal

Incorrect disposal can put the environment at risk.
Dispose of instrument components and packaging materials in an environmentally compatible way and in accordance with the country-specific waste disposal regulations.

12099431.07 11/2018 EN/DE/FR/ES

9. Specifications

9. Specifications

EN

Specifications	73	74	75
Measuring element	Gas-pressure inert gas filling, physiologically safe		
Nominal size	100, 160	100	
Instrument version ■ Model A7x ■ Model R7x ■ Model S7x ■ Model F7x	 Back mount (axial) Lower mount (radial) Back mount, adjustable stem and dial Instruments with capillaries		
Permissible ambient temperature	-40 ... +60 °C		0 ... 60 °C
Working range ■ Continuous load (1 year) ■ Short time (max. 24 h)	 Measuring range (EN 13190) Scale range (EN 13190)		
Case, ring	Stainless steel		
Stem, process connection	Stainless steel 316SS	Stainless steel 1.4435	Stainless steel 316SS
Ingress protection per IEC/EN 60529	IP65 IP66 (liquid-filled)	IP66	

For further specifications see WIKA data sheets TM 73.01, TM 74.01 or TM 75.01 and the order documentation.

12099431.07 11/2018 EN/DE/FR/ES

EN

12099431.07 11/2018 EN/DE/FR/ES

Inhalt

DE

1.	Allgemeines	26
2.	Aufbau und Funktion	27
3.	Sicherheit	28
4.	Transport, Verpackung und Lagerung	33
5.	Inbetriebnahme, Betrieb	34
6.	Störungen	38
7.	Wartung und Reinigung	40
8.	Demontage, Rücksendung und Entsorgung	42
9.	Technische Data	45

12099431.07 11/2018 EN/DE/FR/ES

DE

1. Allgemeines

1. Allgemeines

- Die in der Betriebsanleitung beschriebenen Gasdruckthermometer werden nach dem aktuellen Stand der Technik gefertigt. Alle Komponenten unterliegen während der Fertigung strengen Qualitäts- und Umweltkriterien. Unsere Managementsysteme sind nach ISO 9001 und ISO 14001 zertifiziert.
- Diese Betriebsanleitung gibt wichtige Hinweise zum Umgang mit dem Gerät. Voraussetzung für sicheres Arbeiten ist die Einhaltung aller angegebenen Sicherheitshinweise und Handlungsanweisungen.
- Die für den Einsatzbereich des Gerätes geltenden örtlichen Unfallverhütungsvorschriften und allgemeinen Sicherheitsbestimmungen einhalten.
- Die Betriebsanleitung ist Produktbestandteil und muss in unmittelbarer Nähe des Gerätes für das Fachpersonal jederzeit zugänglich aufbewahrt werden. Betriebsanleitung an nachfolgende Benutzer oder Besitzer des Gerätes weitergeben.
- Das Fachpersonal muss die Betriebsanleitung vor Beginn aller Arbeiten sorgfältig durchgelesen und verstanden haben.
- Es gelten die allgemeinen Geschäftsbedingungen in den Verkaufsunterlagen.
- Technische Änderungen vorbehalten.
- Weitere Informationen:
  - Internet-Adresse: www.wika.de / www.wika.com
  - zugehöriges Datenblatt: TM 73.01, TM 74.01, TM 75.01
  - Anwendungsberater: Tel.: +49 9372 132-0
    Fax: +49 9372 132-406
    info@wika.de

12099431.07 11/2018 EN/DE/FR/ES

2. Aufbau und Funktion

2. Aufbau und Funktion

DE

2.1 Überblick

Beispiel: Typ F73.100 Beispiel: Typ R74.100

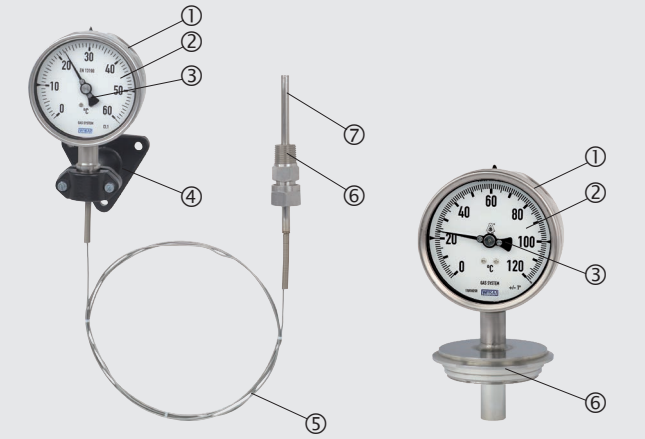

① Gehäuse
② Zifferblatt
③ Zeiger
④ Messgerätehalter
⑤ Fernleitung
⑥ Prozessanschluss
⑦ Tauchrohr

2.2 Beschreibung

Das Gasdruckthermometer besteht aus Tauchschaft, Kapillarleitung und Rohrfeder im Gehäuse. Diese Teile sind zu einer Einheit verbunden. Das komplette Messsystem ist unter Druck mit einem inerten Gas gefüllt.

Eine Temperaturänderung bewirkt im Tauchschaft eine Veränderung des Innendruckes. Der Druck verformt die Messfeder, deren Auslenkung über ein Zeigerwerk auf den Zeiger übertragen wird.

12099431.07 11/2018 EN/DE/FR/ES

2. Aufbau und Funktion / 3. Sicherheit

Schwankungen der Umgebungstemperatur auf das Gehäuse können vernachlässigt werden, da zwischen dem Zeigerwerk und der Messfeder ein Bimetallelement zur Kompensation eingebaut ist.

DE

Anzeigebereiche bei Genauigkeitsklasse 1 nach EN 13190
von -200 ... +700 °C

2.3 Lieferumfang

Lieferumfang mit dem Lieferschein abgleichen

3. Sicherheit

3.1 Symbolerklärung

WARNUNG!
... weist auf eine möglicherweise gefährliche Situation hin, die zum Tod oder zu schweren Verletzungen führen kann, wenn sie nicht gemieden wird.

VORSICHT!
... weist auf eine möglicherweise gefährliche Situation hin, die zu geringfügigen oder leichten Verletzungen bzw. Sach- und Umweltschäden führen kann, wenn sie nicht gemieden wird.

GEFAHR!
... kennzeichnet Gefährdungen durch elektrischen Strom. Bei Nichtbeachtung der Sicherheitshinweise besteht die Gefahr schwerer oder tödlicher Verletzungen.

WARNUNG!
... weist auf eine möglicherweise gefährliche Situation hin, die durch heiße Oberflächen oder Flüssigkeiten zu Verbrennungen führen kann, wenn sie nicht gemieden wird.

12099431.07 11/2018 EN/DE/FR/ES

3. Sicherheit

Information
... hebt nützliche Tipps und Empfehlungen sowie Informationen für einen effizienten und störungsfreien Betrieb hervor.

DE

3.2 Bestimmungsgemäße Verwendung

Die Gasdruckthermometer werden hauptsächlich in der Prozessindustrie eingesetzt, um die Temperatur des Prozesses zu überwachen.

Die Geräte sind nicht für den Einsatz in explosionsgefährdeten Bereichen zugelassen!

Die Geräte sind ausschließlich für den hier beschriebenen bestimmungsgemäßen Verwendungszweck konzipiert und konstruiert und dürfen nur dementsprechend verwendet werden.

Ansprüche jeglicher Art aufgrund von nicht bestimmungsgemäßer Verwendung sind ausgeschlossen.

3.3 Fehlgebrauch

WARNUNG!
Verletzungen durch Fehlgebrauch
Fehlgebrauch des Gerätes kann zu gefährlichen Situationen und Verletzungen führen.

- ▶ Eigenmächtige Umbauten am Gerät unterlassen.
- ▶ Gerät nicht in explosionsgefährdeten Bereichen einsetzen.
- ▶ Gerät nicht für abrasive und viskose Messstoffe verwenden.

Jede über die bestimmungsgemäße Verwendung hinausgehende oder andersartige Benutzung gilt als Fehlgebrauch.

Dieses Gerät nicht in Sicherheits- oder in Not-Aus-Einrichtungen benutzen.

12099431.07 11/2018 EN/DE/FR/ES

3. Sicherheit

3.4 Verantwortung des Betreibers

Das Gerät wird im gewerblichen Bereich eingesetzt. Der Betreiber unterliegt daher den gesetzlichen Pflichten zur Arbeitssicherheit.

DE

Die Sicherheitshinweise dieser Betriebsanleitung, sowie die für den Einsatzbereich des Gerätes gültigen Sicherheits-, Unfallverhütungs- und Umweltschutzvorschriften einhalten.

Der Betreiber ist verpflichtet das Typenschild lesbar zu halten.

Für ein sicheres Arbeiten am Gerät muss der Betreiber sicherstellen,

- dass eine entsprechende Erste-Hilfe-Ausrüstung vorhanden ist und bei Bedarf jederzeit Hilfe zur Stelle ist.
- dass das Bedienpersonal regelmäßig in allen zutreffenden Fragen von Arbeitssicherheit, Erste Hilfe und Umweltschutz unterwiesen wird, sowie die Betriebsanleitung und insbesondere die darin enthaltenen Sicherheitshinweise kennt.
- dass das Gerät gemäß der bestimmungsgemäßen Verwendung für den Anwendungsfall geeignet ist.

3.5 Personalqualifikation

WARNUNG!
Verletzungsgefahr bei unzureichender Qualifikation
Unsachgemäßer Umgang kann zu erheblichen Personen- und Sachschäden führen.

- ► Die in dieser Betriebsanleitung beschriebenen Tätigkeiten nur durch Fachpersonal nachfolgend beschriebener Qualifikation durchführen lassen.

Fachpersonal
Das vom Betreiber autorisierte Fachpersonal ist aufgrund seiner fachlichen Ausbildung, seiner Kenntnisse der Mess- und Regelungstechnik und seiner Erfahrungen sowie Kenntnis der landesspezifischen Vorschriften, geltenden Normen und Richtlinien in der Lage, die beschriebenen Arbeiten auszuführen und mögliche Gefahren selbstständig zu erkennen.

12099431.07 11/2018 EN/DE/FR/ES

3. Sicherheit

Bedienpersonal
Das vom Betreiber geschulte Personal ist aufgrund seiner Bildung, Kenntnisse und Erfahrungen in der Lage, die beschriebenen Arbeiten auszuführen und mögliche Gefahren selbstständig zu erkennen.

Spezielle Einsatzbedingungen verlangen weiteres entsprechendes Wissen, z. B. über aggressive Medien.

DE

3.6 Persönliche Schutzausrüstung
Die persönliche Schutzausrüstung dient dazu, das Fachpersonal gegen Gefahren zu schützen, die dessen Sicherheit oder Gesundheit bei der Arbeit beeinträchtigen könnten. Beim Ausführen der verschiedenen Arbeiten an und mit dem Gerät muss das Fachpersonal persönliche Schutzausrüstung tragen.

Die erforderliche persönliche Schutzausrüstung muss vom Betreiber zur Verfügung gestellt werden.

12099431.07 11/2018 EN/DE/FR/ES

DE

3. Sicherheit

3.7 Beschilderung, Sicherheitskennzeichnungen

Typenschild (Beispiel)

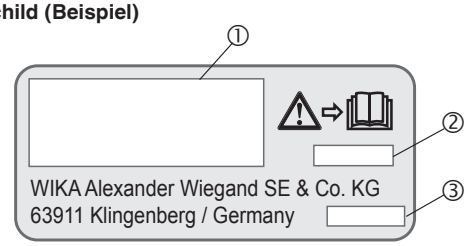

① Typ
② Herstellungsjahr
③ Seriennummer

Vor Montage und Inbetriebnahme des Gerätes unbedingt die Betriebsanleitung lesen!

Geräte nicht nachträglich mit Füllflüssigkeit befüllen.

12099431.07 11/2018 EN/DE/FR/ES

4. Transport, Verpackung und Lagerung

4. Transport, Verpackung und Lagerung

DE

4.1 Transport

Gerät auf eventuell vorhandene Transportschäden untersuchen.
Offensichtliche Schäden unverzüglich mitteilen.

VORSICHT!
Beschädigungen durch unsachgemäßen Transport
Bei unsachgemäßem Transport können Sachschäden in erheblicher Höhe entstehen.

- ▶ Beim Abladen der Packstücke bei Anlieferung sowie innerbetrieblichem Transport vorsichtig vorgehen und die Symbole auf der Verpackung beachten.
- ▶ Bei innerbetrieblichem Transport die Hinweise unter Kapitel 4.2 „Verpackung und Lagerung“ beachten.

Wird das Gerät von einer kalten in eine warme Umgebung transportiert, so kann durch Kondensatbildung eine Störung der Gerätefunktion eintreten. Vor einer erneuten Inbetriebnahme die Angleichung der Gerätetemperatur an die Raumtemperatur abwarten.

4.2 Verpackung und Lagerung

Verpackung erst unmittelbar vor der Montage entfernen.
Die Verpackung aufbewahren, denn diese bietet bei einem Transport einen optimalen Schutz (z. B. wechselnder Einbauort, Reparatursendung).

Zulässige Bedingungen am Lagerort:

- Grenztemperaturen für Lagerung und Transport
  -50 … +70 °C (-58 ... +158 °F) ohne Flüssigkeitsdämpfung
  -40 … +70 °C (-40 ... +158 °F) mit Flüssigkeitsdämpfung
- Feuchtigkeit: 35 ... 85 % relative Feuchte (keine Betauung)

Folgende Einflüsse vermeiden:

- Direktes Sonnenlicht oder Nähe zu heißen Gegenständen
- Mechanische Vibration, mechanischer Schock (hartes Aufstellen)
- Ruß, Dampf, Staub und korrosive Gase
- Explosionsgefährdete Umgebung, entzündliche Atmosphären

12099431.07 11/2018 EN/DE/FR/ES

DE

4. Transport ... / 5. Inbetriebnahme, Betrieb

Das Gerät in der Originalverpackung an einem Ort lagern, der die oben gelisteten Bedingungen erfüllt. Wenn die Originalverpackung nicht vorhanden ist, dann das Gerät wie folgt verpacken und lagern:

1. Das Gerät in eine antistatische Plastikfolie einhüllen.
2. Das Gerät mit dem Dämmmaterial in der Verpackung platzieren.
3. Bei längerer Einlagerung (mehr als 30 Tage) einen Beutel mit Trocknungsmittel der Verpackung beilegen.

5. Inbetriebnahme, Betrieb

Personal: Fachpersonal
Werkzeuge: Geeigneter Schraubenschlüssel

WARNUNG!
Körperverletzungen, Sach- und Umweltschäden durch gefährliche Messstoffe
Bei Kontakt mit gefährlichen Messstoffen (z. B. Sauerstoff, Acetylen, brennbaren oder giftigen Stoffen), gesundheitsgefährdenden Messstoffen (z. B. ätzend, giftig, krebserregend, radioaktiv) sowie bei Kälteanlagen, Kompressoren besteht die Gefahr von Körperverletzungen, Sach- und Umweltschäden. Am Gerät können im Fehlerfall aggressive Medien mit extremer Temperatur und unter hohem Druck oder Vakuum anliegen.

- ► Bei diesen Messstoffen müssen über die gesamten allgemeinen Regeln hinaus die einschlägigen Vorschriften beachtet werden.

Beim Einschrauben des Gerätes die dazu erforderliche Kraft nicht über das Gehäuse aufbringen, sondern mit geeignetem Werkzeug nur über die dafür vorgesehenen Schlüsselflächen.

12099431.07 11/2018 EN/DE/FR/ES

5. Inbetriebnahme, Betrieb

Montage mit Gabelschlüssel

DE

- Der Tauchschaft soll möglichst mit seiner ganzen Länge der zu messenden Temperatur ausgesetzt sein. Mindestens aber die Länge des aktiven Teils, welche der Länge des Gasausdehnungsgefäßes entspricht (aktive Länge).
- Der Temperaturfühler muss in Rohrleitungen oder sonstigen Messstellen der Strömungsrichtung möglichst schräg entgegengerichtet stehen.
- Wärmeableitfehler entstehen, wenn der Messraum, dessen Temperatur angezeigt werden soll, sehr klein ist, so dass sich die Masse des Temperaturfühlers als Wärmekapazität bemerkbar macht. Wärmeableitfehler können auch bei nicht genügender Einbautiefe entstehen, wenn die Befestigungsarmatur an einem guten Wärmeleiter (Metallplatten oder dergleichen) befestigt ist und ein erheblicher Temperaturunterschied zwischen der Mess- und der Befestigungselement-Temperatur besteht.
- Das Anzeigegehäuse muss erschütterungsfrei montiert werden. Gegebenenfalls kann z. B. durch eine flexible Verbindungsleitung von der Messstelle zum Thermometer und die Befestigung über eine Messgerätehalterung eine Entkopplung vom Einbauort erreicht werden.

Falls dies nicht möglich ist, dürfen folgende Grenzwerte nicht überschritten werden:
Frequenzbereich < 150 Hz
Beschleunigung < 0,5 g (5 m/s^2)

Belüftungsventil (falls vorhanden) nach der Montage von CLOSE auf OPEN stellen.

12099431.07 11/2018 EN/DE/FR/ES

DE

5. Inbetriebnahme, Betrieb

Die Flüssigkeitsfüllung ist regelmäßig zu überprüfen.
Der Flüssigkeitsspiegel darf nicht unter 75 % des Gerätedurchmessers fallen.
Starke Erschütterungen, Schwingungen und Vibrationen führen zu Anzeigeunsicherheiten, erhöhtem Verschleiß im Übersetzungswerk bzw. Bruch an den Schweiß- oder Lötstellen.

Bei der Montage eines dreh- und schwenkbaren Gasdruckthermometers besondere Vorschriften beachten. Folgende Schritte einhalten, um die Anzeige in die gewünschte Position zu bringen:
1. Konter- oder Überwurfmutter am Prozessanschluss lösen.
2. Sechskant- und Schlitzschrauben am Schwenkgelenk lösen.

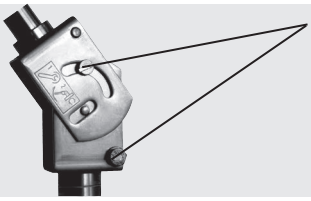

lösen

Unbedingt auch die auf der gegenüberliegenden Seite liegenden Schrauben lösen!

3. Anzeige positionieren, Sechskant- und Schlitzschrauben anziehen und schließlich die Konter- oder Überwurfmutter fest anziehen.

12099431.07 11/2018 EN/DE/FR/ES

5. Inbetriebnahme, Betrieb

5.1 Verwendung von Schutzrohren

VORSICHT!
Beschädigung durch falsche Handhabung
Bei der Verwendung von Schutzrohren beachten, dass der Tauchschaft nicht den Boden des Schutzrohres berührt, da durch die unterschiedlichen Ausdehnungskoeffizienten der Materialen sich der Tauchschaft am Boden des Schutzrohres verbiegen könnte.

- Korrekte Einbaulänge verwenden (Formeln zur Berechnung der Einbaulänge l_1 siehe entsprechendes Schutzrohrdatenblatt).

DE

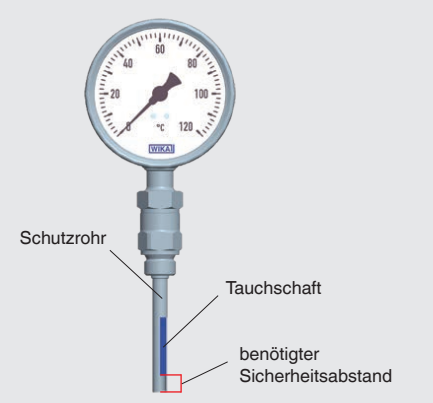

12099431.07 11/2018 EN/DE/FR/ES

DE

5. Inbetriebnahme, Betrieb / 6. Störungen

5.2 Wärmekontaktmittel
Bei Verwendung von Schutzrohren möglichst durch Einfüllen eines Wärmekontaktmittels den Wärmeübertragungswiderstand zwischen Fühleraußenwand und Schutzrohrinnenwand reduzieren. Die Arbeitstemperatur der Wärmeleitpaste beträgt -40 ... +200 °C.

WARNUNG!
Körperverletzungen und Sachschäden durch herausspritzendes Öl
Bei Einfüllen eines Wärmekontaktmittels in heiße Schutzrohre besteht die Gefahr von Körperverletzungen und Sachschäden durch herausspritzendes Öl.
- ► Nicht in heiße Schutzrohre einfüllen

6. Störungen

Personal: Fachpersonal oder Servicepersonal
Werkzeuge: Geeigneter Schraubenschlüssel

VORSICHT!
Körperverletzungen, Sach- und Umweltschäden
Können Störungen mit Hilfe der aufgeführten Maßnahmen nicht beseitigt werden, Gerät unverzüglich außer Betrieb setzen.
- ► Sicherstellen, dass kein Druck bzw. Signal mehr anliegt und gegen versehentliche Inbetriebnahme schützen.
- ► Kontakt mit dem Hersteller aufnehmen.
- ► Bei notwendiger Rücksendung die Hinweise unter Kapitel 8.2 „Rücksendung“ beachten.

12099431.07 11/2018 EN/DE/FR/ES

6. Störungen

WARNUNG!
Körperverletzungen, Sach- und Umweltschäden durch gefährliche Messstoffe
Bei Kontakt mit gefährlichen Messstoffen (z. B. Sauerstoff, Acetylen, brennbaren oder giftigen Stoffen), gesundheitsgefährdenden Messstoffen (z. B. ätzend, giftig, krebserregend, radioaktiv) sowie bei Kälteanlagen, Kompressoren besteht die Gefahr von Körperverletzungen, Sach- und Umweltschäden. Am Gerät können im Fehlerfall aggressive Medien mit extremer Temperatur und unter hohem Druck oder Vakuum anliegen.

- Bei diesen Messstoffen müssen über die gesamten allgemeinen Regeln hinaus die einschlägigen Vorschriften beachtet werden.

DE

Kontaktdaten siehe Kapitel 1 „Allgemeines“ oder Rückseite der Betriebsanleitung.

Störungen	Ursachen	Maßnahmen
Zeiger bewegt sich nicht bei ansteigender Temperatur	Gasverlust durch etwaige Vibrationen	Gerät ausbauen und ersetzen
Keine Ablesbarkeit durch beschlagene/ vereiste Sichtscheibe	Einsatz bei Temperaturen unter dem Gefrierpunkt	Angleichung der Gerätetemperatur an die Raumtemperatur abwarten
	Keine Füllflüssigkeit im Gehäuse	Ersatz durch ein Thermometer mit Füllflüssigkeit
Abgefallener Zeiger	Zu starke Vibrations- oder Schockbelastung	Austausch des Messgerätes durch Thermometer mit Füllung
Gefülltes Gerät im Bereich des Füllstopfens undicht	Umgebungstemperatur niedriger als -40 °C	Austausch durch ein Gerät für Umgebungstemperatur bis zu -50 °C
Bläschen in der Sichtscheibe (Mehrschichtensicherheitsglas)	Zu hohe Umgebungstemperatur	Gegen Strahlungswärme isolieren

12099431.07 11/2018 EN/DE/FR/ES

DE

6. Störungen / 7. Wartung und Reinigung

Störungen	Ursachen	Maßnahmen
Gerät lässt sich nicht in das Schutzrohr einschrauben	Falsches Gewinde bzw. Tauchrohrdurchmesser bzw. Tauchrohr zu lang	Thermometer oder Schutzrohr austauschen
Zifferblatt verfärbt sich	Zu hohe Umgebungs-temperatur	Gegen Strahlungswärme isolieren
Sichtscheibe gesprungen	Ggf. Thermometer über Gehäuse festgezogen	Austausch des Gerätes

7. Wartung und Reinigung

Personal: Fachpersonal oder Servicepersonal
Werkzeuge: Geeigneter Schraubenschlüssel

Kontaktdaten siehe Kapitel 1 „Allgemeines“ oder Rückseite der Betriebsanleitung.

7.1 Wartung

Diese Gasdruckthermometer sind wartungsfrei!
Eine Überprüfung der Anzeige sollte etwa 1 bis 2 mal pro Jahr erfolgen. Dazu ist das Gerät vom Prozess zu trennen und mit einem Temperatur-kalibrator zu kontrollieren.

Reparaturen sind ausschließlich vom Hersteller durchzuführen.

12099431.07 11/2018 EN/DE/FR/ES

7. Wartung und Reinigung

7.2 Reinigung

VORSICHT!
Körperverletzungen, Sach- und Umweltschäden
Eine unsachgemäße Reinigung führt zu Körperverletzungen, Sach- und Umweltschäden. Messstoffreste im ausgebauten Gerät können zur Gefährdung von Personen, Umwelt und Einrichtung führen.
- ▶ Reinigungsvorgang wie folgt beschrieben durchführen.

DE

1. Notwendige Schutzausrüstung verwenden.
2. Das Gerät mit einem feuchten Tuch reinigen.

VORSICHT!
Beschädigung des Gerätes
Eine unsachgemäße Reinigung führt zur Beschädigung des Gerätes!
- ▶ Keine aggressiven Reinigungsmittel verwenden.
- ▶ Keine harten und spitzen Gegenstände zur Reinigung verwenden.

3. Ausgebautes Gerät spülen bzw. säubern, um Personen und Umwelt vor Gefährdung durch anhaftende Messstoffreste zu schützen.

12099431.07 11/2018 EN/DE/FR/ES

8. Demontage, Rücksendung, Entsorgung

8. Demontage, Rücksendung und Entsorgung

Personal: Fachpersonal
Werkzeuge: Geeigneter Schraubenschlüssel

DE

WARNUNG!
Körperverletzungen, Sach- und Umweltschäden durch Messstoffreste
Messstoffreste im ausgebauten Gerät können zur Gefährdung von Personen, Umwelt und Einrichtung führen.
- ▶ Angaben im Sicherheitsdatenblatt für den entsprechenden Messstoff beachten.
- ▶ Ausgebautes Gerät spülen bzw. säubern, um Personen und Umwelt vor Gefährdung durch anhaftende Messstoffreste zu schützen.

8.1 Demontage

WARNUNG!
Körperverletzungen, Sach- und Umweltschäden durch Messstoffreste
Bei Kontakt mit gefährlichen Messstoffen (z. B. Sauerstoff, Acetylen, brennbaren oder giftigen Stoffen), gesundheitsgefährdenden Messstoffen (z. B. ätzend, giftig, krebserregend, radioaktiv) sowie bei Kälteanlagen, Kompressoren besteht die Gefahr von Körperverletzungen, Sach- und Umweltschäden.
- ▶ Vor der Einlagerung das ausgebaute Gerät (nach Betrieb) spülen bzw. säubern, um Personen und Umwelt vor Gefährdung durch anhaftende Messstoffreste zu schützen.
- ▶ Angaben im Sicherheitsdatenblatt für den entsprechenden Messstoff beachten.

12099431.07 11/2018 EN/DE/FR/ES

8. Demontage, Rücksendung, Entsorgung

WARNUNG!
Verbrennungsgefahr
Beim Ausbau besteht Gefahr durch austretende, gefährlich heiße Messstoffe.
- ▶ Vor dem Ausbau das Gerät ausreichend abkühlen lassen!

DE

WARNUNG!
Körperverletzung
Bei der Demontage besteht Gefahr durch aggressive Medien und hohe Drücke.
- ▶ Angaben im Sicherheitsdatenblatt für den entsprechenden Messstoff beachten.
- ▶ Thermometer im drucklosen Zustand demontieren.

8.2 Rücksendung

Beim Versand des Gerätes unbedingt beachten:
Alle an WIKA gelieferten Geräte müssen frei von Gefahrstoffen (Säuren, Laugen, Lösungen, etc.) sein und sind daher vor der Rücksendung zu reinigen.

WARNUNG!
Körperverletzungen, Sach- und Umweltschäden durch Messstoffreste
Messstoffreste im ausgebauten Gerät können zur Gefährdung von Personen, Umwelt und Einrichtung führen.
- ▶ Bei Gefahrstoffen das Sicherheitsdatenblatt für den entsprechenden Messstoff beilegen.
- ▶ Gerät reinigen, siehe Kapitel 7.2 „Reinigung“.

Zur Rücksendung des Gerätes die Originalverpackung oder eine geeignete Transportverpackung verwenden.

12099431.07 11/2018 EN/DE/FR/ES

DE

8. Demontage, Rücksendung, Entsorgung

Um Schäden zu vermeiden:

1. Das Gerät in eine antistatische Plastikfolie einhüllen.
2. Das Gerät mit dem Dämmmaterial in der Verpackung platzieren. Zu allen Seiten der Transportverpackung gleichmäßig dämmen.
3. Wenn möglich einen Beutel mit Trocknungsmittel der Verpackung beifügen.
4. Sendung als Transport eines hochempfindlichen Messgerätes kennzeichnen.

Hinweise zur Rücksendung befinden sich in der Rubrik „Service“ auf unserer lokalen Internetseite.

8.3 Entsorgung

Durch falsche Entsorgung können Gefahren für die Umwelt entstehen. Gerätekomponenten und Verpackungsmaterialien entsprechend den landesspezifischen Abfallbehandlungs- und Entsorgungsvorschriften umweltgerecht entsorgen.

12099431.07 11/2018 EN/DE/FR/ES

9. Technische Daten

9. Technische Daten

DE

Technische Daten	73	74	75
Messelement	Gasdruck-Inertgasfüllung, physiologisch unbedenklich		
Nenngröße	100, 160	100	
Geräteausführung ■ Typ A7x ■ Typ R7x ■ Typ S7x ■ Typ F7x	 Anschlusslage rückseitig (axial) Anschlusslage unten (radial) Anschlusslage rückseitig, dreh- und schwenkbar Geräte mit Fernleitung		
Zulässige Umgebungs-temperatur	-40 ... +60 °C		0 ... 60 °C
Verwendungsbereich ■ Dauerbelastung (1 Jahr) ■ kurzzeitig (max. 24 h)	 Messbereich (EN 13190) Anzeigebereich (EN 13190)		
Gehäuse, Ring	CrNi-Stahl		
Tauchschaft, Prozess-anschluss	CrNi-Stahl 316SS	CrNi-Stahl 1.4435	CrNi-Stahl 316SS
Schutzart nach IEC/EN 60529	IP65 IP66 (flüssigkeitsgefüllt)	IP66	

Weitere technische Daten siehe WIKA-Datenblätter TM 73.01, TM 74.01 oder TM 75.01 und Bestellunterlagen.

12099431.07 11/2018 EN/DE/FR/ES

DE

12099431.07 11/2018 EN/DE/FR/ES

Sommaire

FR

1.	Généralités	48
2.	Conception et fonction	49
3.	Sécurité	50
4.	Transport, emballage et stockage	55
5.	Mise en service, utilisation	56
6.	Dysfonctionnements	60
7.	Entretien et nettoyage	62
8.	Démontage, retour et mise au rebut	64
9.	Spécifications	67

12099431.07 11/2018 EN/DE/FR/ES

1. Généralités

1. Généralités

FR

- Les thermomètres à dilatation de gaz décrits dans le mode d'emploi ont été conçus et fabriqués selon les dernières technologies en vigueur. Tous les composants sont soumis à des exigences environnementales et de qualité strictes durant la fabrication. Nos systèmes de gestion sont certifiés selon ISO 9001 et ISO 14001.
- Ce mode d'emploi donne des indications importantes concernant l'utilisation de l'instrument. Il est possible de travailler en toute sécurité avec ce produit en respectant toutes les consignes de sécurité et d'utilisation.
- Respecter les prescriptions locales de prévention contre les accidents et les prescriptions générales de sécurité en vigueur pour le domaine d'application de l'instrument.
- Le mode d'emploi fait partie de l'instrument et doit être conservé à proximité immédiate de l'instrument et accessible à tout moment pour le personnel qualifié. Confier le mode d'emploi à l'utilisateur ou propriétaire ultérieur de l'instrument.
- Le personnel qualifié doit, avant de commencer toute opération, avoir lu soigneusement et compris le mode d'emploi.
- Les conditions générales de vente mentionnées dans les documents de vente s'appliquent.
- Sous réserve de modifications techniques.
- Pour obtenir d'autres informations :

  - Consulter notre site Internet : www.wika.fr
  - Fiche technique correspondante : TM 73.01, TM 74.01, TM 75.01
  - Conseiller applications : Tél. : 0 820 951010 (0,15 €/min)
    +33 1 787049-46
    Fax : 0 891 035891 (0,35 €/min)
    info@wika.fr

12099431.07 11/2018 EN/DE/FR/ES

2. Conception et fonction

2. Conception et fonction

2.1 Vue générale

Exemple : type F73.100 Exemple : type R74.100

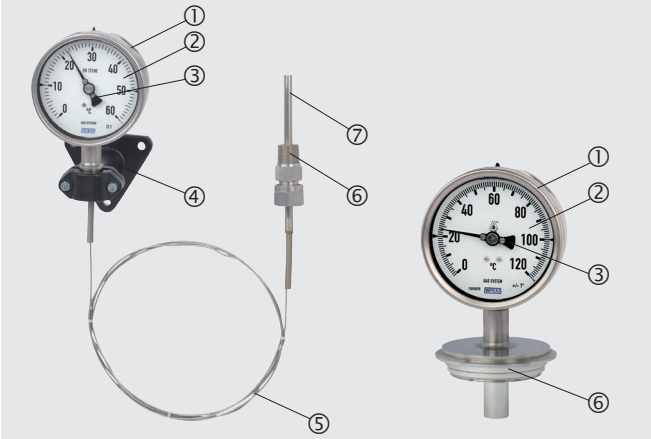

① Boîtier
② Cadran
③ Aiguille
④ Potence de fixation
⑤ Capillaire
⑥ Raccord process
⑦ Plongeur

2.2 Description

Le thermomètre à dilatation de gaz est composé d'un plongeur, d'un capillaire et d'un tube de mesure dans le boîtier. Ces pièces sont assemblées pour former un tout. Le système de mesure complet est rempli sous pression avec du gaz inerte.

Toute variation de température cause une modification de la pression interne dans le plongeur. La pression déforme le tube de mesure et la déformation est transférée à l'aiguille par un mouvement.

12099431.07 11/2018 EN/DE/FR/ES

FR

2. Conception et fonction / 3. Sécurité

Les variations de la température ambiante agissant sur le boîtier sont compensées par un élément bimétal monté entre le mouvement et le tube de mesure.

Échelles de mesure pour la classe de précision 1 selon EN 13190
de -200 ... +700 °C

FR

2.3 Détail de la livraison

Comparer le détail de la livraison avec le bordereau de livraison

3. Sécurité

3.1 Explication des symboles

AVERTISSEMENT !
… indique une situation présentant des risques susceptibles de provoquer la mort ou des blessures graves si elle n'est pas évitée.

ATTENTION !
… indique une situation potentiellement dangereuse et susceptible de provoquer de légères blessures ou des dommages pour le matériel et pour l'environnement si elle n'est pas évitée.

DANGER !
... indique les dangers liés au courant électrique. Danger de blessures graves ou mortelles en cas de non respect des consignes de sécurité.

AVERTISSEMENT !
… indique une situation présentant des risques susceptibles de provoquer des brûlures dues à des surfaces ou liquides chauds si elle n'est pas évitée.

12099431.07 11/2018 EN/DE/FR/ES

3. Sécurité

Information
... met en exergue les conseils et recommandations utiles de même que les informations permettant d'assurer un fonctionnement efficace et normal.

3.2 Utilisation conforme à l'usage prévu

FR

Les thermomètres à dilatation de gaz sont principalement utilisés dans l'industrie pour surveiller les températures du process.

Ces instruments ne sont pas homologués pour un usage en zone explosive !

Ces instruments sont conçus et construits exclusivement pour une utilisation conforme à l'usage prévu décrit ici, et ne doivent être utilisés qu'à cet effet.

Aucune réclamation ne peut être recevable en cas d'utilisation non conforme à l'usage prévu.

3.3 Utilisation inappropriée

AVERTISSEMENT !
Blessures causées par une utilisation inappropriée
Une utilisation inappropriée peut conduire à des situations dangereuses et à des blessures.

- ▶ S'abstenir de modifications non autorisées sur l'instrument
- ▶ Ne pas utiliser l'instrument en zone explosive.
- ▶ Ne pas utiliser l'instrument avec un fluide abrasif ou visqueux.

Toute utilisation différente ou au-delà de l'utilisation prévue est considérée comme inappropriée.

Ne pas utiliser cet instrument dans des dispositifs de sécurité ou d'arrêt d'urgence.

12099431.07 11/2018 EN/DE/FR/ES

3. Sécurité

FR

3.4 Responsabilité de l'opérateur

L'instrument est prévu pour un usage dans le domaine industriel. L'opérateur est de ce fait responsable des obligations légales en matière de sécurité du travail.

Les instructions de sécurité de ce mode d'emploi comme les réglementations liées à la sécurité, à la prévention des accidents et à la protection de l'environnement pour le domaine d'application doivent être respectées.

L'opérateur doit s'assurer que la plaque signalétique reste lisible.

Afin de travailler en toute sécurité sur l'instrument, la société exploitante doit s'assurer

- qu'un équipement de premier secours adapté est disponible et que les premiers soins peuvent être dispensés sur place à tout moment en cas de besoin.
- que le personnel de service soit formé à intervalles réguliers sur tous les sujets concernant la sécurité du travail, les premiers secours et la protection de l'environnement et qu'il connaît le mode d'emploi et particulièrement les consignes de sécurité contenues dans celui-ci.
- que l'instrument est adapté à l'application en respect de l'usage prévu de l'instrument.

3.5 Qualification du personnel

AVERTISSEMENT !
Danger de blessure en cas de qualification insuffisante
Une utilisation non conforme peut entraîner d'importants dommages corporels et matériels.

▶ Les opérations décrites dans ce mode d'emploi ne doivent être effectuées que par un personnel ayant la qualification décrite ci-après.

12099431.07 11/2018 EN/DE/FR/ES

3. Sécurité

Personnel qualifié
Le personnel qualifié, autorisé par l'opérateur, est, en raison de sa formation spécialisée, de ses connaissances dans le domaine de l'instrumentation de mesure et de régulation et de son expérience, de même que de sa connaissance des réglementations nationales et des normes en vigueur, en mesure d'effectuer les travaux décrits et d'identifier de façon autonome les dangers potentiels.

FR

Personnel opérationnel
Le personnel formé par l'opérateur est, en raison de sa formation et de son expérience en mesure d'effectuer les travaux décrits et de reconnaître de façon autonome les dangers potentiels.

Les conditions d'utilisation spéciales exigent également une connaissance adéquate, par ex. des liquides agressifs.

3.6 Equipement de protection individuelle

L'équipement de protection individuelle sert à protéger le personnel qualifié contre les dangers pouvant entraver la sécurité et la santé de ce dernier durant le travail. Le personnel qualifié doit porter l'équipement de protection individuelle lors de l'exécution des différents travaux sur et avec l'instrument.

L'équipement de protection individuelle requis doit être mis à disposition par l'utilisateur.

12099431.07 11/2018 EN/DE/FR/ES

FR

3. Sécurité

3.7 Etiquetage, marquages de sécurité

Plaque signalétique (exemple)

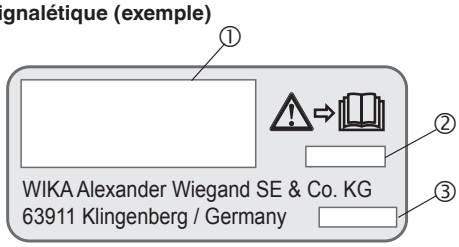

① Type
② Année de fabrication
③ Numéro de série

Lire impérativement le mode d'emploi avant le montage et la mise en service de l'instrument !

Ne pas remplir ultérieurement les appareils de liquide de remplissage.

12099431.07 11/2018 EN/DE/FR/ES

4. Transport, emballage et stockage

4.1 Transport

Vérifier s'il existe des dégâts sur l'instrument liés au transport.
Communiquer immédiatement les dégâts constatés.

ATTENTION !
Dommages liés à un transport inapproprié
Un transport inapproprié peut donner lieu à des dommages importants.

- ▶ Lors du déchargement des colis à la livraison comme lors du transport des colis en interne après réception, il faut procéder avec soin et observer les consignes liées aux symboles figurant sur les emballages.
- ▶ Lors du transport en interne, observer les instructions du chapitre 4.2 “Emballage et stockage”.

FR

Si l'instrument est transporté d'un environnement froid dans un environnement chaud, la formation de condensation peut provoquer un dysfonctionnement fonctionnel de l'instrument. Il est nécessaire d'attendre que la température de l'instrument se soit adaptée à la température ambiante avant une nouvelle mise en service.

4.2 Emballage et stockage

N'enlever l'emballage qu'avant le montage.
Conserver l'emballage, celui-ci offre, lors d'un transport, une protection optimale (par ex. changement de lieu d'utilisation, renvoi pour réparation).

Conditions admissibles sur le lieu de stockage :

- Limites de température pour le stockage et le transport
  -50 … +70 °C (-58 ... +158 °F) sans liquide amortisseur
  -40 … +70 °C (-40 ... +158 °F) avec liquide amortisseur
- Humidité : de 35 ... 85 % d'humidité relative (pas de formation de rosée)

Eviter les influences suivantes :

- Lumière solaire directe ou proximité d'objets chauds
- Vibrations mécaniques, chocs mécaniques (mouvements brusques en le posant)
- Suie, vapeur, poussière et gaz corrosifs
- Environnements dangereux, atmosphères inflammables

12099431.07 11/2018 EN/DE/FR/ES

4. Transport ... / 5. Mise en service, utilisation

Conserver l'instrument dans l'emballage original dans un endroit qui satisfait aux conditions susmentionnées. Si l'emballage d'origine n'est pas disponible, emballer et stocker l'instrument comme suit :

1. Emballer l'instrument dans une feuille de plastique antistatique.
2. Placer l'instrument avec le matériau isolant dans l'emballage.
3. En cas d'entreposage long (plus de 30 jours), mettre également un sachet absorbeur d'humidité dans l'emballage.

FR

5. Mise en service, utilisation

Personnel : personnel qualifié
Outils : une clé adéquate

AVERTISSEMENT !
Blessures physiques et dommages aux équipements et à l'environnement causés par un fluide dangereux
Lors du contact avec un fluide dangereux (par ex. oxygène, acétylène, substances inflammables ou toxiques), un fluide nocif (par ex. corrosif, toxique, cancérigène, radioactif), et également avec des installations de réfrigération et des compresseurs, il y a un danger de blessures physiques et de dommages aux équipements et à l'environnement.
En cas d'erreur, des fluides agressifs peuvent être présents à une température extrême et sous une pression élevée ou sous vide au niveau de l'instrument.

- ▶ Pour ces fluides, les codes et directives appropriés existants doivent être observés en plus des régulations standard.

Lors du vissage de l'instrument, le couple de serrage ne doit pas être appliqué sur le boîtier mais seulement sur les surfaces prévues et ce avec un outil approprié.

12099431.07 11/2018 EN/DE/FR/ES

5. Mise en service, utilisation

Montage avec clé plate

FR

- Le plongeur doit si possible être soumis sur toute sa longueur à la température à mesurer ; ou au moins sur la longueur de la partie active correspondant à la longueur du vase d'expansion de gaz (longueur active).
- Dans des conduites ou d'autres points de mesure, la sonde de température doit être positionnée le plus possible dans le sens opposé à la direction d'écoulement du fluide.
- Des erreurs de transfert thermique se produisent si lla zone où doit être mesurée de température est trop petite si bien que la masse de la sonde de température représente une capacité thermique. Des erreurs de transfert thermique peuvent aussi apparaître si la profondeur d'insertion est insuffisante, si le support de montage est fixé sur un bon conducteur thermique (plaques métalliques ou similaires) et s'il existe une différence considérable entre la température de l'élément de mesure et celle de l'élément de fixation.
- Le boîtier l'affichage doit être installé à un endroit exempt de vibrations. Le cas échéant, il est possible d'isoler l'instrument du lieu d'installation en utilisant par exemple un flexible de raccordement entre le point de mesure et le thermomètre et en fixant ce dernier à l'aide d'un support d'instrument mural.

Lorsque cela n'est pas possible, veiller à ce que les valeurs limites suivantes ne soient pas dépassées :
Plage de fréquence < 150 Hz
Accélération < 0,5 g (5 m/s^2)

Après le montage, commuter le levier de mise à l'atmosphère (si disponible) de la position CLOSE sur OPEN.

12099431.07 11/2018 EN/DE/FR/ES

5. Mise en service, utilisation

Le liquide de remplissage doit être contrôlé régulièrement.
Le niveau de remplissage de liquide ne doit pas descendre en-dessous de 75 % du diamètre de l'instrument.
Les fortes secousses, les oscillations et les vibrations provoquent des erreurs d'affichage, augmentent l'usure du mécanisme de transmission et peuvent occasionner des ruptures au niveau des soudures et brasages.

FR

Lors du montage d'un thermomètre à dilatation de gaz pivotant et inclinable, des prescriptions particulières doivent être observées. Pour placer le boîtier d'indication dans la position requise, il convient de passer par les étapes suivantes :

1. Le contre-écrou ou l'écrou-raccord doit être desserré sur le raccord process.
2. Les boulons et vis doivent être desserrés sur l'articulation pivotante.

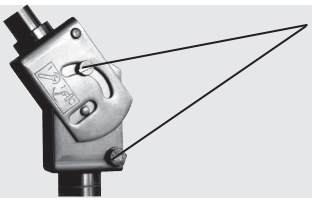

desserrer

Desserrer impérativement également les vis situées sur le côté opposé !

3. Positionner l'affichage, serrer les boulons et les vis. Pour finir, serrer le contre-écrou ou l'écrou-chapeau à fond.

12099431.07 11/2018 EN/DE/FR/ES

5. Mise en service, utilisation

5.1 Utilisation de doigts de gant

ATTENTION !
Dommages dus à une manipulation incorrecte
Lors de l'utilisation des doigts de gants, veiller à ce que le plongeur ne touche pas le fond du doigt de gant, en raison des différents coefficients d'extension des matériaux, il y a risque de déformation du plongeur sur le fond du doigt de gant.

- ▶ Utiliser la longueur utile correcte (pour la formule de calcul de la longueur d'insertion l_1, voir la fiche technique du doigt de gant correspondant).

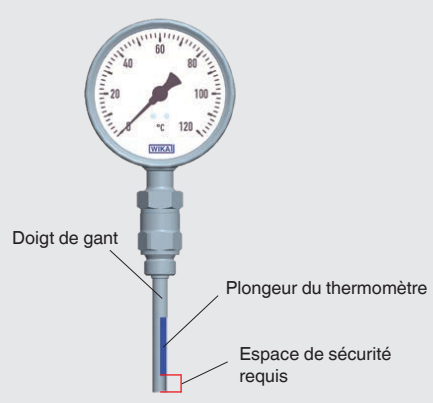

FR

12099431.07 11/2018 EN/DE/FR/ES

5. Mise en service ... / 6. Dysfonctionnements

5.2 Fluide de contact thermique
En cas d'utilisation de doigts de gants, il convient de réduire au maximum la résistance de transmission de la chaleur entre la paroi extérieure du capteur et la paroi intérieure du doigt de gant en ajoutant un agent de contact thermique. La température de service de la pâte thermique est de -40 ... +200 °C.

FR

AVERTISSEMENT !
Blessures physiques et dommages matériels dus à des projections d'huile
Lorsque l'on verse un fluide de contact thermique dans un doigt de gant chaud, il y a un danger de blessures physiques et de dommages matériels dus à des projections d'huile.
- ► Ne pas verser dans des doigts de gant chauds

6. Dysfonctionnements

Personnel : personnel qualifié ou personnel de service
Outils : une clé adéquate

ATTENTION !
Blessures physiques, dommages aux équipements et à l'environnement
Si les défauts ne peuvent pas être éliminés au moyen des mesures listées, l'instrument doit être mis hors service immédiatement.
- ► S'assurer que la pression ou le signal n'est plus présent et protéger contre une mise en service accidentelle.
- ► Contacter le fabricant.
- ► S'il est nécessaire de retourner l'instrument au fabricant, prière de respecter les indications mentionnées au chapitre 8.2 “Retour”.

12099431.07 11/2018 EN/DE/FR/ES

6. Dysfonctionnements

AVERTISSEMENT !
Blessures physiques et dommages aux équipements et à l'environnement causés par un fluide dangereux
Lors du contact avec un fluide dangereux (par ex. oxygène, acétylène, substances inflammables ou toxiques), un fluide nocif (par ex. corrosif, toxique, cancérigène, radioactif), et également avec des installations de réfrigération et des compresseurs, il y a un danger de blessures physiques et de dommages aux équipements et à l'environnement.
En cas d'erreur, des fluides agressifs peuvent être présents à une température extrême et sous une pression élevée ou sous vide au niveau de l'instrument.

- Pour ces fluides, les codes et directives appropriés existants doivent être observés en plus des régulations standard.

FR

Pour le détail des contacts, merci de consulter le chapitre 1 “Généralités” ou le dos du mode d'emploi.

Dysfonctionnements	Raisons	Mesures
L'aiguille ne bouge pas alors que la température monte	Fuite de gaz due à toutes sortes de vibrations	Retirer l'instrument et le remplacer
Aucune lisibilité à cause d'un voyant embrumé ou gelé	Travailler à des températures inférieures au point de congélation	Il est nécessaire d'attendre que la température de l'instrument se soit adaptée à la température ambiante
	Pas de liquide de remplissage dans le boîtier	Remplacer l'instrument par un thermomètre ayant un liquide de remplissage
L'aiguille s'est détachée	Vibrations ou chocs trop forts	Remplacer l'instrument de mesure par un thermomètre avec un liquide de remplissage

12099431.07 11/2018 EN/DE/FR/ES

FR

6. Dysfonctionnements / 7. Entretien et nettoyage

Dysfonctionnements	Raisons	Mesures
Instrument rempli qui fuit au niveau du bouchon de remplissage	Température ambiante inférieure à -40 °C	Remplacer par un instrument prévu pour une température ambiante jusqu'à -50 °C
Défauts dans le voyant (verre de sécurité feuilleté)	Température ambiante trop élevée	Isoler contre la chaleur rayonnante
Impossible de visser l'instrument dans le doigt de gant	Filetage ou diamètre du plongeur incorrect, ou plongeur trop long	Remplacer le thermomètre ou le doigt de gant
Le cadran est devenu coloré	Température ambiante trop élevée	Isoler contre la chaleur rayonnante
Le voyant est craquelé	Si nécessaire, sécuriser le thermomètre par le boîtier	Remplacer l'instrument

7. Entretien et nettoyage

Personnel : personnel qualifié ou personnel de service
Outils : une clé adéquate

Pour le détail des contacts, merci de consulter le chapitre 1 “Généralités” ou le dos du mode d'emploi.

7.1 Entretien

Ces thermomètre à dilatation de gaz ne nécessitent pas d'entretien ! Un contrôle de l'affichage et des fonctions de commande est recommandé 1 à 2 fois/an. Pour le contrôle de l'affichage et des fonctions de commande, il faut isoler l'instrument du process et le contrôler avec un calibrateur de température.

Les réparations ne doivent être effectuées que par le fabricant.

12099431.07 11/2018 EN/DE/FR/ES

7. Entretien et nettoyage

7.2 Nettoyage

ATTENTION !
Blessures physiques, dommages aux équipements et à l'environnement
Un nettoyage inapproprié peut conduire à des blessures physiques et à des dommages aux équipements ou à l'environnement. Les restes de fluides se trouvant dans les instruments démontés peuvent mettre en danger les personnes, l'environnement ainsi que l'installation.
- ▶ Effectuer la procédure de nettoyage comme décrit ci-dessous.

FR

1. Utiliser l'équipement de protection requis.
2. Nettoyer l'instrument avec un chiffon humide.

ATTENTION !
Dommages à l'instrument
Un nettoyage inapproprié peut endommager l'instrument !
- ▶ Ne pas utiliser de détergents agressifs.
- ▶ Ne pas utiliser d'objets pointus ou durs pour le nettoyage.

3. Laver et décontaminer l'instrument démonté afin de protéger les personnes et l'environnement contre le danger lié aux résidus de fluides.

12099431.07 11/2018 EN/DE/FR/ES

8. Démontage, retour et mise au rebut

Personnel : personnel qualifié
Outils : une clé adéquate

FR

AVERTISSEMENT !
Blessures physiques et dommages aux équipements et à l'environnement liés aux résidus de fluides
Les restes de fluides se trouvant dans les instruments démontés peuvent mettre en danger les personnes, l'environnement ainsi que l'installation.

- ▶ Observer les informations de la fiche de données de sécurité du fluide correspondant.
- ▶ Laver et décontaminer l'instrument démonté afin de protéger les personnes et l'environnement contre le danger lié aux résidus de fluides.

8.1 Démontage

AVERTISSEMENT !
Blessures physiques et dommages aux équipements et à l'environnement liés aux résidus de fluides
Lors du contact avec un fluide dangereux (par ex. oxygène, acétylène, substances inflammables ou toxiques), un fluide nocif (par ex. corrosif, toxique, cancérigène, radioactif), et également avec des installations de réfrigération et des compresseurs, il y a un danger de blessures physiques et de dommages aux équipements et à l'environnement.

- ▶ Avant de stocker l'instrument démonté (à la suite de son utilisation), le laver ou le nettoyer afin de protéger le personnel et l'environnement contre le danger lié aux résidus de fluides.
- ▶ Observer les informations de la fiche de données de sécurité du fluide correspondant.

12099431.07 11/2018 EN/DE/FR/ES

8. Démontage, retour et mise au rebut

AVERTISSEMENT !
Danger de brûlures
Durant le démontage, il y a un danger lié à l'échappement de fluides dangereusement chauds.
- ▶ Avant le démontage du thermomètre, laisser refroidir suffisamment l'instrument !

AVERTISSEMENT !
Blessures physiques
Lors du démontage, le danger peut provenir de fluides agressifs et de pressions élevées.
- ▶ Observer les informations de la fiche de données de sécurité du fluide correspondant.
- ▶ Déconnecter le thermomètre seulement si le système a été mis hors pression !

FR

8.2 Retour

En cas d'envoi de l'instrument, il faut respecter impérativement ceci :
Tous les instruments livrés à WIKA doivent être exempts de substances dangereuses (acides, bases, solutions, etc.) et doivent donc être nettoyés avant d'être retournés.

AVERTISSEMENT !
Blessures physiques et dommages aux équipements et à l'environnement liés aux résidus de fluides
Les restes de fluides se trouvant dans les instruments démontés peuvent mettre en danger les personnes, l'environnement ainsi que l'installation.
- ▶ Avec les substances dangereuses, inclure la fiche technique de sécurité de matériau pour le fluide correspondant.
- ▶ Nettoyer l'instrument, voir chapitre 7.2 “Nettoyage”.

Pour retourner l'instrument, utiliser l'emballage original ou un emballage adapté pour le transport.

12099431.07 11/2018 EN/DE/FR/ES

8. Démontage, retour et mise au rebut

Pour éviter des dommages :
1. Emballer l'instrument dans une feuille de plastique antistatique.
2. Placer l'instrument avec le matériau isolant dans l'emballage.
   Isoler de manière uniforme tous les côtés de l'emballage de transport.
3. Mettre si possible un sachet absorbeur d'humidité dans l'emballage.
4. Indiquer lors de l'envoi qu'il s'agit d'un instrument de mesure très sensible à transporter.

FR

Des informations relatives à la procédure de retour sont disponibles sur notre site Internet à la rubrique “Services”.

8.3 Mise au rebut

Une mise au rebut inadéquate peut entraîner des dangers pour l'environnement.
Eliminer les composants des instruments et les matériaux d'emballage conformément aux prescriptions nationales pour le traitement et l'élimination des déchets et aux lois de protection de l'environnement en vigueur.

12099431.07 11/2018 EN/DE/FR/ES

9. Spécifications

9. Spécifications

Spécifications	73	74	75
Elément de mesure	Système à dilatation rempli de gaz inerte, non toxique sur le plan physiologique		
Diamètre	100, 160	100	
Version de l'instrument ■ Type A7x ■ Type R7x ■ Type S7x ■ Type F7x	 Plongeur arrière Plongeur vertical Plongeur arrière, boîtier orientable et inclinable Instruments avec capillaire		
Température ambiante admissible	-40 ... +60 °C		0 ... 60 °C
Plage de travail ■ Fonctionnement continu (1 an) ■ Ponctuellement (max. 24 h)	 Etendue de mesure (EN 13190) Echelle de mesure (EN 13190)		
Boîtier, lunette	Acier inox		
Plongeur, raccord process	Acier inox 316SS	Acier inox 1.4435	Acier inox 316SS
Indice de protection selon CEI/EN 60529	IP65 IP 66 (rempli de liquide)	IP66	

Pour de plus amples spécifications, voir les fiches techniques WIKA TM 73.01, TM 74.01 ou TM 75.01 et la documentation de commande.

FR

12099431.07 11/2018 EN/DE/FR/ES

FR

12099431.07 11/2018 EN/DE/FR/ES

Contenido

1.	Información general	70
2.	Diseño y función	71
3.	Seguridad	72
4.	Transporte, embalaje y almacenamiento	77
5.	Puesta en servicio, funcionamiento	78
6.	Errores	82
7.	Mantenimiento y limpieza	84
8.	Desmontaje, devolución y eliminación de residuos	86
9.	Datos técnicos	89

ES

12099431.07 11/2018 EN/DE/FR/ES

1. Información general

1. Información general

ES

- Los termómetros de dilatación de gas descritos en el manual de instrucciones se fabrican conforme al estado actual de la técnica. Todos los componentes están sujetos a rigurosos criterios de calidad y medio ambiente durante la producción. Nuestros sistemas de gestión están certificados según ISO 9001 e ISO 14001.
- Este manual de instrucciones proporciona indicaciones importantes acerca del manejo del instrumento. Para un trabajo seguro, es imprescindible cumplir con todas las instrucciones de seguridad y manejo indicadas.
- Cumplir siempre las normativas sobre la prevención de accidentes y las normas de seguridad en vigor en el lugar de utilización del instrumento.
- El manual de instrucciones es una parte integrante del instrumento y debe guardarse en la proximidad del mismo para que el personal especializado pueda consultarlo en cualquier momento. Entregar el manual de instrucciones al usuario o propietario del instrumento.
- El personal especializado debe haber leído y entendido el manual de instrucciones antes de comenzar cualquier trabajo.
- Se aplican las condiciones generales de venta incluidas en la documentación de venta.
- Modificaciones técnicas reservadas.
- Para obtener más informaciones consultar:

- Página web:	www.wika.es
- Hoja técnica correspondiente:	TM 73.01, TM 74.01, TM 75.01
- Servicio técnico:	Tel.: +34 933 9386-30
	Fax: +34 933 9386-66
	info@wika.es

12099431.07 11/2018 EN/DE/FR/ES

2. Diseño y función

2. Diseño y función

2.1 Resumen

Ejemplo: modelo F73.100 Ejemplo: modelo R74.100

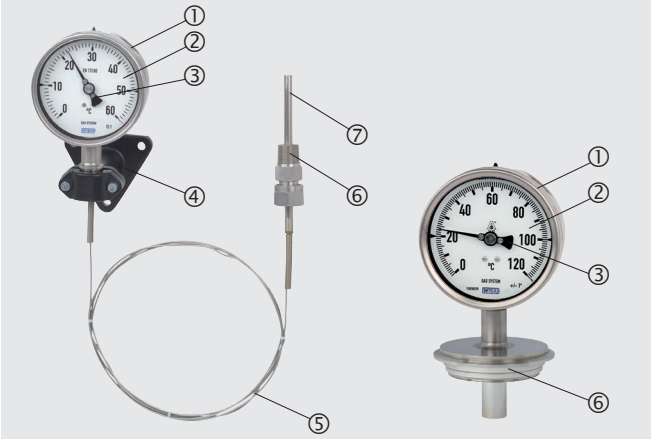

① Caja
② Esfera
③ Aguja
④ Soporte de instrumento
⑤ Capilar
⑥ Conexión a proceso
⑦ Bulbo

2.2 Descripción

El termómetro de gas está compuesto de bulbo, línea capilar y tubo flexible en la caja. Estos componentes forman una unidad. El sistema sensible está rellenado a presión con gas inerte.

Si varía temperatura, varía la presión interior del bulbo. La presión deforma el muelle de medición, cuyo movimiento se transmite al indicador a través de un mecanismo de indicación.

ES

12099431.07 11/2018 EN/DE/FR/ES

2. Diseño y funcionamiento / 3. Seguridad

Las variaciones de la temperatura ambiente son despreciables porque hay un elemento bimetálico entre el mecanismo de indicación y el muelle que sirve de compensador.

Rangos de indicación en la clase de exactitud 1 según EN 13190
de -200 ... +700 °C

2.3 Alcance del suministro

ES

Comparar mediante el albarán si se han entregado todas las piezas

3. Seguridad

3.1 Explicación de símbolos

¡ADVERTENCIA!
... indica una situación probablemente peligrosa que puede causar la muerte o lesiones graves si no se la evita.

¡CUIDADO!
... indica una situación probablemente peligrosa que puede causar lesiones leves o medianas, o daños materiales y medioambientales, si no se la evita.

¡PELIGRO!
... identifica los peligros causados por la corriente eléctrica. Existe riesgo de lesiones graves o mortales si no se observan estas indicaciones de seguridad.

¡ADVERTENCIA!
... indica una situación probablemente peligrosa que puede causar quemaduras debido a superficies o líquidos calientes si no se evita.

12099431.07 11/2018 EN/DE/FR/ES

3. Seguridad

Información
... destaca consejos y recomendaciones útiles así como informaciones para una utilización eficiente y libre de errores.

3.2 Uso conforme a lo previsto

Los termómetros de dilatación de gas se utilizan principalmente en la industria de procesos para supervisar la temperatura del proceso.

¡Los dispositivos no están homologados para aplicaciones en zonas potencialmente explosivas!

Los instrumentos han sido diseñados y construidos únicamente para la finalidad aquí descrita y deben utilizarse en conformidad a la misma.

No se admite ninguna reclamación debido a una utilización no conforme a lo previsto.

3.3 Uso incorrecto

¡ADVERTENCIA!
Lesiones por uso incorrecto
El uso incorrecto del dispositivo puede causar lesiones graves o la muerte.

- ► Abstenerse realizar modificaciones no autorizadas del dispositivo.
- ► No utilizar el dispositivo en zonas potencialmente explosivas.
- ► No utilizar el instrumento para medios abrasivos ni viscosos.

Cualquier uso que no sea el previsto para este dispositivo es considerado como uso incorrecto.

No utilizar este instrumento en sistemas de seguridad o dispositivos de desactivación de emergencia.

12099431.07 11/2018 EN/DE/FR/ES

ES

3. Seguridad

3.4 Responsabilidad del usuario

El dispositivo se utiliza en el sector industrial. Por lo tanto, el usuario está sujeto a las responsabilidades legales para la seguridad en el trabajo.

Se deben cumplir las notas de seguridad de este manual de instrucciones, así como la validez de las normas de seguridad de la unidad, de prevención de accidentes y protección del medio ambiente.

El usuario está obligado a mantener la placa de identificación bien legible.

ES

Para realizar un trabajo seguro en el instrumento el propietario ha de asegurarse de que,

- esté disponible un kit de primeros auxilios que siempre esté presente y ayuda en caso necesario.
- los operadores reciban periódicamente instrucciones, sobre todos los temas referidos a seguridad de trabajo, primeros auxilios y protección del medio ambiente, y conozcan además el manual de instrucciones y en particular las instrucciones de seguridad del mismo.
- el instrumento sea adecuado de acuerdo con el uso previsto para la aplicación.

3.5 Cualificación del personal

¡ADVERTENCIA!
Riesgo de lesiones debido a una insuficiente cualificación
Un manejo no adecuado puede causar considerables daños personales y materiales.

- ▶ Las actividades descritas en este manual de instrucciones deben realizarse únicamente por personal especializado con la consiguiente cualificación.

Personal especializado
Debido a su formación profesional, a sus conocimientos de la técnica de regulación y medición así como a su experiencia y su conocimiento de las normativas, normas y directivas vigentes en el país de utilización el personal especializado autorizado por el usuario es capaz de ejecutar los trabajos descritos y reconocer posibles peligros por sí solo.

12099431.07 11/2018 EN/DE/FR/ES

3. Seguridad

Operarios
El personal formado por el usuario es capaz de realizar el trabajo descrito y de identificar los peligros potenciales debido a su formación, el conocimiento y la experiencia.

Algunas condiciones de uso específicas requieren conocimientos adicionales, p. ej. acerca de medios agresivos.

3.6 Equipo de protección individual

El equipo de protección individual protege al personal especializado contra peligros que puedan perjudicar la seguridad y salud del mismo durante el trabajo. El personal especializado debe llevar un equipo de protección individual durante los trabajos diferentes en y con el instrumento.

El propietario debe proporcionar el equipo de protección individual.

ES

12099431.07 11/2018 EN/DE/FR/ES

3. Seguridad

3.7 Rótulos, marcajes de seguridad

Placa de identificación (ejemplo)

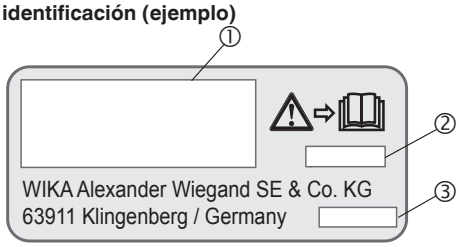

ES

① Modelo
② Año de fabricación
③ Número de serie

¡Es absolutamente necesario leer el manual de instrucciones antes del montaje y la puesta en servicio del instrumento!

No llenar posteriormente los instrumentos de líquido de relleno.

12099431.07 11/2018 EN/DE/FR/ES

4. Transporte, embalaje y almacenamiento

4.1 Transporte

Comprobar si el instrumento presenta eventuales daños causados en el transporte. Notificar daños obvios de forma inmediata.

¡CUIDADO!
Daños debidos a un transporte inadecuado
Transportes inadecuados pueden causar daños materiales considerables.

- ▶ Tener cuidado al descargar los paquetes durante la entrega o el transporte dentro de la compañía y respetar los símbolos en el embalaje.
- ▶ Observar las instrucciones en el capítulo 4.2 “Embalaje y almacenamiento” en el transporte dentro de la compañía.

ES

Si se transporta el instrumento de un ambiente frío a uno caliente, puede producirse un error de funcionamiento en el mismo. En tal caso, hay que esperar a que la temperatura del instrumento se adapte a la temperatura ambiente antes de ponerlo nuevamente en funcionamiento.

4.2 Embalaje y almacenamiento

No quitar el embalaje hasta justo antes del montaje.
Guardar el embalaje ya que es la protección ideal durante el transporte (por ejemplo si el lugar de instalación cambia o si se envía el instrumento para posibles reparaciones).

Condiciones admisibles en el lugar de almacenamiento:

- Temperaturas límite para almacenamiento y transporte
  -50 … +70 °C (-58 ... +158 °F) sin líquido de relleno
  -40 … +70 °C (-40 ... +158 °F) con líquido de relleno
- Humedad: 35 ... 85 % de humedad relativa (sin rocío)

Evitar lo siguiente:

- Luz solar directa o proximidad a objetos calientes
- Vibración mecánica, impacto mecánico (colocación brusca)
- Hollín, vapor, polvo y gases corrosivos
- Entorno potencialmente explosivo, atmósferas inflamables

12099431.07 11/2018 EN/DE/FR/ES

4. Transporte ... / 5. Puesta en servicio ...

Almacenar el instrumento en su embalaje original en un lugar que cumple las condiciones arriba mencionadas. Si no se dispone del embalaje original, empaquetar y almacenar el instrumento como sigue:

1. Envolver el instrumento en una lámina de plástico antiestática.
2. Colocar el instrumento junto con el material aislante en el embalaje.
3. Para un almacenamiento prolongado (más de 30 días) meter una bolsa con un secante en el embalaje.

ES

5. Puesta en servicio, funcionamiento

Personal: Personal especializado
Herramientas: Llave adecuada

¡ADVERTENCIA!
Lesiones corporales, daños materiales y del medio ambiente causados por medios peligrosos
En caso de contacto con medios peligrosos (p. ej. oxígeno, acetileno, inflamables o tóxicos) medios nocivos para la salud (p. ej. corrosivas, tóxicas, cancerígenas radioactivas) y con sistemas de refrigeración o compresores existe el peligro de lesiones corporales, daños materiales y del medio ambiente.
En caso de fallo es posible que haya medios agresivos con temperaturas extremas o de bajo presión o que haya un vacío en el instrumento.

- ► Con estos medios deben observarse en cada caso, además de todas las reglas generales, las disposiciones pertinentes.

Para enroscar el instrumento, la fuerza no debe aplicarse sobre la caja, sino únicamente sobre las superficies claves previstas para este fin, utilizando herramientas adecuadas.

12099431.07 11/2018 EN/DE/FR/ES

5. Puesta en servicio, funcionamiento

ES

- Para conseguir óptimos resultados el bulbo debe exponerse en toda su longitud a la temperatura a medir. La longitud mínima y necesaria es la longitud de la parte activa que corresponde a la longitud del vaso de expansión de gas (longitud activa).
- Posicionar el sensor de temperatura en tuberías u otros puntos de medición con la máxima inclinación contra el sentido del flujo.
- Errores en la disipación del calor surgen cuando la temperatura del espacio de medición que se desea indicar es muy baja, de modo que la masa del sensor de temperatura aplica como capacidad térmica. Tales errores también pueden surgir debido a una insuficiente profundidad de montaje, si el dispositivo de fijación está sujeto a un efectivo conductor de calor (placas de metal o semejantes) y si existe una diferencia considerable de temperatura entre el elemento sensible y el elemento de fijación.
- La caja del indicador debe montarse de modo libre de vibraciones. Si es necesario, se puede conseguir el desacoplamiento del lugar de instalación mediante un conducto flexible desde el punto de medición al termómetro y una fijación mediante un soporte del instrumento.

Si esto no es posible, no se debe sobrepasar en ningun caso los siguientes valores límites:
Rango de frecuencias < 150 Hz
Aceleración < 0,5 g (5 m/s^2)

Tras el montaje se debe posicionar la válvula de ventilación (si existe) de CLOSE a OPEN.

12099431.07 11/2018 EN/DE/FR/ES

5. Puesta en servicio, funcionamiento

Comprobar periodicamente el llenado de líquido
El nivel de líquido no debe caer por debajo del 75 % del diámetro del instrumento.
Fuertes sacudidas, oscilaciones y vibraciones provocan imprecisiones de indicación, aumentan el desgaste en el mecanismo de transmisión y las roturas en los puntos de soldadura.

Para la instalación de un termómetro de dilatación de gas, de caja giratoria y orientable, hay que seguir instrucciones específicas. Seguir los siguientes pasos para llevar el indicador a la posición deseada.

ES

1. Aflojar la turca o contratuerca en la conexión al proceso.
2. Aflojar los tornillos hexagonales y ranurados del pivote.

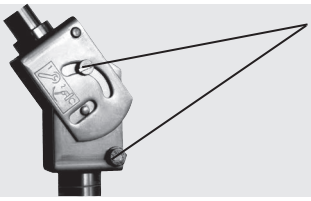

3. Posicionar el indicador, apretar los tornillos hexagonales y de ranura y finalmente apretar firmemente la contratuerca o la tuerca de unión.

12099431.07 11/2018 EN/DE/FR/ES

5. Puesta en servicio, funcionamiento

5.1 Utilización de vainas

¡CUIDADO!
Daños debido a manipulación errónea
Si se utilizan vainas, hay que asegurarse de que el bulbo no tenga contacto con el fondo de la vaina porque los diferentes coeficientes de dilatación de los materiales pueden causar la deformación del bulbo en el fondo de la vaina.

- ► Emplear una longitud de montaje adecuada (Fórmula para calcular la longitud de montaje l_1, véase la correspondiente hoja técnica de la vaina)

ES

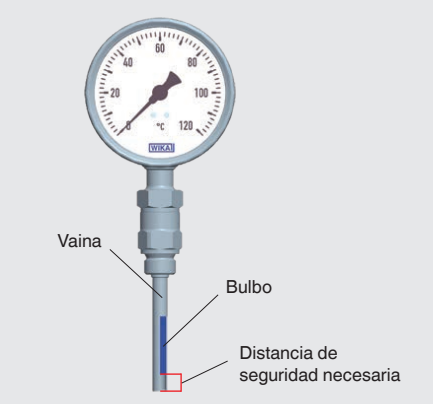

12099431.07 11/2018 EN/DE/FR/ES

5. Puesta en servicio, funcionamiento / 6. Errores

5.2 Agentes de contacto térmico
Si se utilizan vainas, reducir la resistencia de transferencia de calor entre la pared exterior del sensor y la pared interior de la vaina llenando ésta con un agente de contacto. La temperatura de trabajo de la pasta térmica está entre -40 ... +200 °C.

ES

¡ADVERTENCIA!
Lesiones corporales y daños materiales debido a salpicaduras de aceite
Al cargar un agente de contacto térmico en vainas calientes, existe el peligro de lesiones corporales y daños materiales debido a salpicaduras de aceite.
- ► No llenar en vainas calientes

6. Errores

Personal: personal especializado o de servicio técnico
Herramientas: Llave adecuada

¡CUIDADO!
Lesiones corporales, daños materiales y del medio ambiente
Si no se pueden solucionar los defectos mencionados se debe poner el dispositivo inmediatamente fuera de servicio.
- ► Asegurar que el dispositivo no queda expuesto a presión o una señal y protegerlo contra usos accidentales.
- ► Contactar con el fabricante.
- ► En caso de devolución, observar las indicaciones del capítulo 8.2 “Devolución”.

12099431.07 11/2018 EN/DE/FR/ES

6. Errores

¡ADVERTENCIA!
Lesiones corporales, daños materiales y del medio ambiente causados por medios peligrosos
En caso de contacto con medios peligrosos (p. ej. oxígeno, acetileno, inflamables o tóxicos) medios nocivos para la salud (p. ej. corrosivas, tóxicas, cancerígenas radioactivas) y con sistemas de refrigeración o compresores existe el peligro de lesiones corporales, daños materiales y del medio ambiente.
En caso de fallo es posible que haya medios agresivos con temperaturas extremas o de bajo presión o que haya un vacío en el instrumento.

- ► Con estos medios deben observarse en cada caso, además de todas las reglas generales, las disposiciones pertinentes.

Datos de contacto véase el capítulo 1 “Información general” o parte posterior del manual de instrucciones.

Errores	Causas	Medidas
La aguja no se mueve con temperatura en ascenso	Pérdida de gas debido a cualquier vibración	Desmontar el instrumento y reemplazarlo
No hay legibilidad debido a la mirilla empañada/helada	Uso con temperaturas inferiores al punto de congelación	En tal caso, hay que esperar a que la temperatura del instrumento se adapte a la temperatura ambiente.
	No hay líquido de relleno en la caja	Reemplazar por un termómetro con líquido de relleno
Aguja caída	Carga excesiva de vibraciones o impactos	Reemplazar el instrumento de medición por un termómetro con relleno
Instrumento relleno con fugas en la zona del tapón de carga	Temperatura ambiente inferior a -40 °C	Reemplazarlo por un instrumento para temperatura ambiente de hasta -50 °C

ES

12099431.07 11/2018 EN/DE/FR/ES

ES

6. Errores / 7. Mantenimiento y limpieza

Errores	Causas	Medidas
Burbujas en la mirilla (cristal de seguridad de varias capas)	Temperatura ambiente demasiado elevada	Aislarlo contra el calor radiante
El aparato no se puede enroscar en la vaina.	Rosca equivocada, diámetro o longitud de la vaina demasiado grande	Reemplazar el termómetro o la vaina
La esfera se decolora	Temperatura ambiente demasiado elevada	Aislarlo contra el calor radiante
Mirilla rajada	Eventualmente el termómetro se apretó demasiado a la caja	Reemplazar el instrumento

7. Mantenimiento y limpieza

Personal: personal especializado o de servicio técnico
Herramientas: Llave adecuada

Datos de contacto véase el capítulo 1 “Información general” o parte posterior del manual de instrucciones.

7.1 Mantenimiento

¡Los termómetros de dilatación de gas no requieren mantenimiento! Controlar el instrumento y la función de conmutación una o dos veces al año. Para eso, separar el instrumento del proceso y controlarlo con un dispositivo de calibración de temperatura.

Todas las reparaciones solamente las debe efectuar el fabricante.

12099431.07 11/2018 EN/DE/FR/ES

7. Mantenimiento y limpieza

7.2 Limpieza

¡CUIDADO!
Lesiones corporales, daños materiales y del medio ambiente
Una limpieza inadecuada provoca lesiones corporales, daños materiales y del medio ambiente. Medios residuales en el instrumento desmontado pueden causar riesgos para personas, medio ambiente e instalación.
- ▶ Realizar el proceso de limpieza tal como se describe a continuación.

ES

1. Utilizar el equipo de protección necesario.
2. Limpiar el instrumento con un trapo húmedo.

¡CUIDADO!
Daño al dispositivo
¡Una limpieza inadecuada puede dañar el dispositivo!
- ▶ No utilizar productos de limpieza agresivos.
- ▶ No utilizar ningún objeto puntiagudo o duro para la limpieza.

3. Enjuagar y limpiar el dispositivo desmontado para proteger a las personas y el medio ambiente contra peligros por medios residuales adherentes.

12099431.07 11/2018 EN/DE/FR/ES

8. Desmontaje, devolución y eliminación de residuos

Personal: Personal especializado
Herramientas: Llave adecuada

¡ADVERTENCIA!
Lesiones corporales, daños materiales y del medio ambiente por medios residuales
Medios residuales en el instrumento desmontado pueden causar riesgos para personas, medio ambiente e instalación.

- ▶ Observar la ficha de datos de seguridad correspondiente al medio.
- ▶ Enjuagar y limpiar el dispositivo desmontado para proteger a las personas y el medio ambiente contra peligros por medios residuales adherentes.

ES

8.1 Desmontaje

¡ADVERTENCIA!
Lesiones corporales, daños materiales y del medio ambiente por medios residuales
En caso de contacto con medios peligrosos (p. ej. oxígeno, acetileno, inflamables o tóxicos) medios nocivos para la salud (p. ej. corrosivas, tóxicas, cancerígenas radioactivas) y con sistemas de refrigeración o compresores existe el peligro de lesiones corporales, daños materiales y del medio ambiente.

- ▶ Enjuagar y limpiar el dispositivo desmontado (tras servicio) antes de proceder a su almacenaje para proteger a las personas y el medio ambiente de la exposición a medios adherentes.
- ▶ Observar la ficha de datos de seguridad correspondiente al medio.

12099431.07 11/2018 EN/DE/FR/ES

8. Desmontaje, devolución, eliminación de residuos

¡ADVERTENCIA!
Riesgo de quemaduras
Peligro debido a medios muy calientes que se escapan durante el desmontaje.
- ¡Dejar enfriar el instrumento lo suficiente antes de desmontarlo!

¡ADVERTENCIA!
Lesión corporal
Al desmontar existe el peligro debido a los medios agresivos y altas presiones.
- Observar la ficha de datos de seguridad correspondiente al medio.
- Desmontar el termómetro solo en estado despresurizado.

ES

8.2 Devolución

Es imprescindible observar lo siguiente para el envío del instrumento:
Todos los instrumentos enviados a WIKA deben estar libres de sustancias peligrosas (ácidos, lejías, soluciones, etc.) y, por lo tanto, deben limpiarse antes de devolver.

¡ADVERTENCIA!
Lesiones corporales, daños materiales y del medio ambiente por medios residuales
Medios residuales en el instrumento desmontado pueden causar riesgos para personas, medio ambiente e instalación.
- En caso de sustancias peligrosas adjuntar la ficha de datos de seguridad correspondiente al medio.
- Limpiar el dispositivo, consultar el capítulo 7.2 “Limpieza”.

Utilizar el embalaje original o un embalaje adecuado para la devolución del instrumento.

12099431.07 11/2018 EN/DE/FR/ES

8. Desmontaje, devolución, eliminación de residuos

Para evitar daños:
1. Envolver el instrumento en una lámina de plástico antiestática.
2. Colocar el instrumento junto con el material aislante en el embalaje. Aislar uniformemente todos los lados del embalaje de transporte.
3. Si es posible, adjuntar una bolsa con secante.
4. Aplicar un marcado de que se trata del envío de un instrumento de medición altamente sensible.

ES

Comentarios sobre el procedimiento de las devoluciones encuentra en el apartado “Servicio” en nuestra página web local.

8.3 Eliminación de residuos

Una eliminación incorrecta puede provocar peligros para el medio ambiente.
Eliminar los componentes de los instrumentos y los materiales de embalaje conforme a los reglamentos relativos al tratamiento de residuos y eliminación vigentes en el país de utilización.

12099431.07 11/2018 EN/DE/FR/ES

9. Datos técnicos

9. Datos técnicos

Datos técnicos	73	74	75
Elemento sensible	Relleno de gas inerte a presión, fisiológicamente inofensivo		
Diámetro nominal	100, 160	100	
Versión del instrumento ■ Modelo A7x ■ Modelo R7x ■ Modelo S7x ■ Modelo F7x	 Conexión dorsal (axial) Conexión inferior (radial) Conexión dorsal, giratoria y orientable Instrumentos con capilar		
Temperatura ambiente admisible	-40 ... +60 °C		0 ... 60 °C
Rango de servicio ■ Carga a largo plazo (1 año) ■ a corto plazo (máx. 24 h)	 Rango de medida (EN 13190) Rango de indicación (EN 13190)		
Caja, anillo	Acero inoxidable		
Bulbo, conexión a proceso	Acero inoxidable 316SS	Acero inoxidable 1.4435	Acero inoxidable 316SS
Tipo de protección según IEC/EN 60529	IP65 IP 66 (lleno de líquido)	IP66	

Para más datos técnicos véase las hojas técnicas de WIKA TM 73.01, TM 74.01 o TM 75.01, así como la documentación del pedido.

ES

12099431.07 11/2018 EN/DE/FR/ES

12099431.07 11/2018 EN/DE/FR/ES

12099431.07 11/2018 EN/DE/FR/ES

WIKA subsidiaries worldwide can be found online at www.wika.com.
WIKA-Niederlassungen weltweit finden Sie online unter www.wika.de.
La liste des filiales WIKA dans le monde se trouve sur www.wika.fr.
Sucursales WIKA en todo el mundo puede encontrar en www.wika.es.

WIKA Alexander Wiegand SE & Co. KG
Alexander-Wiegand-Straße 30
63911 Klingenberg • Germany
Tel. +49 9372 132-0
Fax +49 9372 132-406
info@wika.de
www.wika.de

12099431.07 11/2018 EN/DE/FR/ES

Additional information
Zusatzinformation
Informations supplémentaires
Información adicional

Additional information for hazardous areas Models 73, 74	**EN**
Zusatzinformation für explosionsgefährdete Bereiche Typen 73, 74	**DE**
Informations complémentaires concernant les zones explosives, types 73, 74	**FR**
Información adicional para zonas potencialmente explosivas, modelos 73, 74	**ES**

Model R74.100

Model F73.100

WIKA
Part of your business

EN	Additional information models 73, 74	Page	3 - 14
DE	Zusatzinformation Typen 73, 74	Seite	15 - 26
FR	Mode d'emploi types 73, 74	Page	27 - 38
ES	Manual de instrucciones modelos 73, 74	Página	39 - 49

© 06/2017 WIKA Alexander Wiegand SE & Co. KG
All rights reserved. / Alle Rechte vorbehalten.
WIKA® is a registered trademark in various countries.
WIKA® ist eine geschützte Marke in verschiedenen Ländern.

Prior to starting any work, read the operating instructions!
Keep for later use!

Vor Beginn aller Arbeiten Betriebsanleitung lesen!
Zum späteren Gebrauch aufbewahren!

Lire le mode d'emploi avant de commencer toute opération !
A conserver pour une utilisation ultérieure !

¡Leer el manual de instrucciones antes de comenzar cualquier trabajo!
¡Guardar el manual para una eventual consulta!

14232232.02 11/2017 EN/DE/FR/ES

Contents

EN

1. Safety	4
2. Commissioning, operation	8
3. Special conditions for use (X conditions)	8
Appendix: EU declaration of conformity	13

Declarations of conformity can be found online at www.wika.com.

14232232.02 11/2017 EN/DE/FR/ES

EN

1. Safety

Supplementary documentation:
- ▶ This additional information for hazardous areas applies in conjunction with the operating instructions “Gas-actuated thermometer, models 73, 74, 75” (article number 12099431).

1. Safety

DANGER!
Danger to life due to loss of explosion protection
Non-observance of these instructions and their contents may result in the loss of explosion protection.
- ▶ Observe the safety instructions in this chapter and further explosion instructions in these operating instructions.
- ▶ Follow the requirements of the ATEX directive.
- ▶ Observe the information given in the relevant regulations for installation and use in hazardous areas (e.g. IEC 60079-11, IEC 60079-10 and IEC 60079-14).

1.1 Explanation of symbols

DANGER!
... indicates a potentially dangerous situation in the hazardous area that can result in serious injury or death, if not avoided.

14232232.02 11/2017 EN/DE/FR/ES

1. Safety

EN

1.2 Intended use

These thermometers are suitable for temperature measurement for industrial applications in hazardous areas.

The instruments have been designed and built solely for the intended use described here, and may only be used accordingly.

Check whether the classification is suitable for the application (see Ex marking, chapter 1.5 “Labelling, safety marks”). Observe the relevant national regulations.

The non-observance of the instructions for use in hazardous areas can lead to the loss of the explosion protection. Adhere to the following limit values and instructions (see data sheet).

The manufacturer shall not be liable for claims of any type based on operation contrary to the intended use.

1.3 Responsibility of the operator

The responsibility for classification of zones lies with the plant operator and not the manufacturer/supplier of the equipment.

1.4 Personnel qualification

The skilled personnel must have knowledge of ignition protection types, regulations and provisions for equipment in hazardous areas.

14232232.02 11/2017 EN/DE/FR/ES

EN

1. Safety

1.5 Labelling, safety marks

Product label (example)

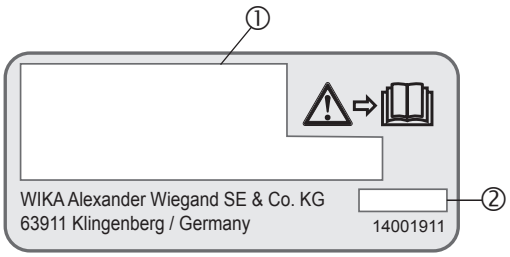

① Model
② Year of manufacture

Marking on the dial
- Ex marking
- Serial number

Ex marking
II 2G Ex h IIC T6 ... T1 Gb X
II 2D Ex h IIIC T85 °C ... T450 °C Db X

Marking	Designation	Meaning
CE	CE marking	European conformity
Ex	Specific marking for explosion protection	Ex symbol
II	Symbol of the equipment group	Equipment intended for use in other places than underground parts of mines, and in those parts of surface installations of such mines, liable to be endangered by firedamp and/or combustible dust and an explosive atmosphere.

14232232.02 11/2017 EN/DE/FR/ES

EN

1. Safety

Marking	Designation	Meaning
2	Symbol of the equipment category	High safety, approved for zone 1 and 21
G	Ex atmosphere	Concerning explosive atmospheres caused by gases, vapours or mists
D	Ex atmosphere	Concerning explosive atmospheres caused by dust
Ex	Ex marking	Standards ISO 80079-36 and ISO 80079-37 applied
h	Ignition protection type	Non-electrical equipment for explosive atmospheres An ignition protection type is not applied to the letter “h”.
IIC	Suitable atmosphere	Gas atmosphere group IIC
IIIC	Suitable atmosphere	Combustible flyings, non-conductive dust and conductive dust
T6 ... T1	Maximum surface temperature	Symbol indicating the temperature class The actual maximum surface temperature depends not on the equipment itself, but mainly on the operating conditions.
T85 °C ... T450 °C	Maximum surface temperature	Maximum surface temperature The actual maximum surface temperature depends not on the equipment itself, but mainly on the operating conditions.
Gb **Db**	Equipment Protection Level (EPL)	Potential ignition sources that are effective or may become effective during normal operation and expected malfunction
X	Specific conditions of use see operating instructions	Ambient temperature with special range Specific conditions of use apply.

Before mounting and commissioning the instrument, ensure you read the operating instructions!

14232232.02 11/2017 EN/DE/FR/ES

2. Commissioning ... / 3. Special conditions for ...

2. Commissioning, operation

EN

DANGER!
Danger to life from missing instrument grounding
With missing or incorrect grounding, there exists a risk of dangerous voltages (leading to, for example, mechanical damage, electrostatic charge or induction).
► Ground thermometer!

Observe the special conditions (see chapter 3 “Special conditions for use (X conditions)”).

3. Special conditions for use (X conditions)

1) **Design temperatures**
Ambient temperature:
- Model 73:
  -40 ... +60 °C without food-compatible liquid damping
- Model 74:
  -40 ... +60 °C without food-compatible liquid damping
  0 ... 60 °C with food-compatible liquid damping

Medium temperature: -200 … +700 °C

Continuous load (1 year): Measuring range (EN 13190)
Short term (max. 24 h): Scale range (EN 13190)

Observe the surface temperature for ATEX application:
The permissible medium temperature does not only depend on the instrument design, but also on the ignition temperature of the surrounding gases, vapours or dust. Take both aspects into account.

14232232.02 11/2017 EN/DE/FR/ES

3. Special conditions for use (X conditions)

EN

2) **Maximum surface temperature**
For instruments with liquid filling, make sure that the surface temperature of the application is lower than 100 °C, so that released liquid filling cannot result in an effective ignition source. This can only be realized by using an appropriate insulation of hot equipment and parts which contain hot media.

The surface temperature mainly depends on the medium and ambient temperature. The instrument itself does not contain any heating sources. For prevention, consider the maximum medium temperature as maximum surface temperature , if it is not possible to determine the real surface temperature even in the case of expected malfunctions. Instruments with capillary (models F73.100 and F73.160) are excluded from this restriction.

Instruments for use in hazardous gas/air, vapour/air and mist/air atmospheres:

Temperature class (gas application)	Maximum permissible surface temperature (for the end application)
T6	+80 °C
T5	+95 °C
T4	+100 °C (+130 °C) [1)]
T3	+100 °C (+195 °C) [1)]
T2	+100 °C (+290 °C) [1)]
T1	+100 °C (+440 °C) [1)]

1) only for instruments without liquid filling

14232232.02 11/2017 EN/DE/FR/ES

EN

3. Special conditions for use (X conditions)

Hazardous dust atmosphere
For dusts, the procedure specified in ISO/IEC 80079-20-2 for determining the ignition temperature has to be applied. The ignition temperature is determined separately for dust clouds and dust layers, respectively. For dust layers, the ignition temperature depends on the dust layer thickness per IEC/EN 60079-14.

Ignition temperature of dust	Maximum permissible medium temperature (in the measuring system)
Dust cloud T_{cloud}	< 2/3 T_{cloud}
Dust layer T_{layer}	< T_{layer} – 75 K – (reduction depending on the layer thickness)

The permissible maximum medium temperature must not exceed the lowest determined value, even in case of a malfunction.

Explosive atmosphere consisting of hybrid mixtures
The instruments must not be used in areas in which an atmosphere consisting of explosive hybrid mixtures (dusts mixed with gases) can occur.

3) Mount the instrument in such a way that, taking into consideration the influence of convection and heat radiation, no deviation above or below the permissible ambient and medium temperatures can occur.
4) The instruments must be earthed via the process connection. This is why electrically conductive sealing should be used at the process connection. Alternatively, take other measures for grounding. External sources depend on end use application and must be assessed by the end user.
5) Avoid handling of materials that react dangerously with the materials used for the instrument, and substances liable to spontaneous combustion.

14232232.02 11/2017 EN/DE/FR/ES

3. Special conditions for use (X conditions)

EN

6) Avoidance of vibration
Requirements for the installation point
If the line to the instrument is not adequately stable, an instrument holder should be used for fastening. If vibrations cannot be avoided by means of suitable installation, use instruments with liquid filling. Protect the instruments against coarse dirt and wide fluctuations in ambient temperature.

Permissible vibration load at the installation site
Always install the instruments in locations free from vibration. If necessary, it is possible to isolate the instrument from the mounting point, e.g. by installing a flexible connection line between the measuring point and the instrument and mounting the instrument on a suitable bracket. If this is not possible, do not exceed the following limits:
Frequency range < 150 Hz
Acceleration < 0.5 g

7) When using thermowells, they must be filled with a thermal contact medium in order to reduce the heat transfer resistance between the outer wall of the probe and the inner wall of the thermowell. The working temperature of the thermal compound is -40 ... +200 °C.

8) Clean the thermometer with a moist cloth. Ensure that due to the cleaning no electrostatic charge will be generated.

9) All accessories (e.g. thermowells or attachment components) must be assessed in combination with the delivered instruments by the end user. Particularly the requirements of grounding and prevention of electrostatic charges must be considered.

14232232.02 11/2017 EN/DE/FR/ES

EN

3. Special conditions for use (X conditions)

10) Ignition hazard analysis

Relevant identified ignition hazards	Implemented protective measures
Hot surfaces	■ Actual surface temperature depends on application; media temperature only ■ Temperature range marking; T range marking ■ Observation of legibility of marking ▶ Information given in operation instructions
Mechanically generated sparks and hot surfaces	■ Low contact speed ■ Limitation of vibration ■ Selection of suitable materials ▶ Information given in operation instructions
Stray electric currents, cathodic corrosion protection	■ Grounding via process connection required ▶ Information given in operation instructions
Static electricity	■ No propagating brush discharge ■ All conductive parts bonded ■ Limitation of projected area of non-conductive parts ■ Limitation of layer thickness of non-conductive parts ■ Grounding via process connection required ■ Description of cleaning process ▶ Information given in operation instructions
Exothermic reactions, including self-ignition of dusts	■ Provision of material data of the wetted parts for the customer in order to avoid the use of critical media ▶ Information given in operation instructions

11) The legibility of the marking must be observed during time in use but at least during inspection periods of three years. If any harm of the legibility is found please contact the manufacturer to renew the marking.

14232232.02 11/2017 EN/DE/FR/ES

Appendix: EU declaration of conformity

EN

WIKA

EU-Konformitätserklärung
EU Declaration of Conformity

Dokument Nr.:
Document No.: 11603917.03

Wir erklären in alleiniger Verantwortung, dass die mit CE gekennzeichneten Produkte
We declare under our sole responsibility that the CE marked products

Typenbezeichnung:
Type Designation:

Model 73:
A73.100 + option ATEX / A73.160 + option ATEX /
R73.100 + option ATEX / R73.160 + option ATEX /
S73.100 + option ATEX / S73.160 + option ATEX /
F73.100 + option ATEX / F73.160 + option ATEX

Model 74:
A74.100 + option ATEX / R74.100 + option ATEX

Beschreibung: **Gasdruck-Thermometer**
Description: ***Gas-actuated thermometer***

gemäß gültigem Datenblatt: TM73.01
according to the valid data sheet: TM74.01

die grundlegenden Schutzanforderungen der folgenden Richtlinien erfüllen:
comply with the essential protection requirements of the directives:

Harmonisierte Normen:
Harmonized standards:

2014/34/EU *2014/34/EU*	Explosionsschutz (ATEX) (1) *Explosion protection (ATEX) (1)*	EN ISO 80079-36:2016 EN ISO 80079-37:2016

Ex II 2G Ex h IIC T6 ... T1 Gb X
II 2D Ex h IIIC T85 °C ... T450 °C Db X

(1) Konformitätsbewertungsverfahren „Interne Fertigungskontrolle". Die Dokumentation ist hinterlegt bei benannter Stelle TÜV NORD CERT GmbH, Essen (Nr. 0044), Aktenmummer 8000550764.
Conformity assessment procedure "Internal Control of Production". The Documentation is deposited at notified body TÜV NORD CERT GmbH, Essen (no. 0044), reference number 8000550764.

Unterzeichnet für und im Namen von / *Signed for and on behalf of*

WIKA Alexander Wiegand SE & Co. KG

Klingenberg, 2017-07-27

Thorsten Seefried, Vice President
Process Gauges

Michael Glombitza, Head of Quality Management
Process Gauges

WIKA Alexander Wiegand SE & Co. KG
Alexander-Wiegand-Straße 30
63911 Klingenberg
Germany

Tel. +49 9372 132-0
Fax +49 9372 132-406
E-Mail info@wika.de
www.wika.de

Kommanditgesellschaft: Sitz Klingenberg – Amtsgericht Aschaffenburg HRA 1819
Komplementärin: WIKA Verwaltungs SE & Co. KG – Sitz Klingenberg – Amtsgericht Aschaffenburg HRA 4685

Komplementärin:
WIKA International SE - Sitz Klingenberg - Amtsgericht Aschaffenburg HRB 10505
Vorstand: Alexander Wiegand
Vorsitzender des Aufsichtsrats: Dr. Max Egli

14232232.02 11/2017 EN/DE/FR/ES

EN

14232232.02 11/2017 EN/DE/FR/ES

Inhalt

DE

1. Sicherheit	16
2. Inbetriebnahme, Betrieb	20
3. Besondere Bedingungen für die Verwendung (X-Conditions)	20
Anlage: EU-Konformitätserklärung	25

Konformitätserklärungen finden Sie online unter www.wika.de.

14232232.02 11/2017 EN/DE/FR/ES

1. Sicherheit

Ergänzende Dokumentation:
- Diese Zusatzinformation für explosionsgefährdete Bereiche gilt zusammen mit der Betriebsanleitung „Gasdruckthermometer, Typen 73, 74, 75“ (Artikelnummer 12099431).

DE

1. Sicherheit

GEFAHR!
Lebensgefahr durch Verlust des Explosionsschutzes
Die Nichtbeachtung dieser Inhalte und Anweisungen kann zum Verlust des Explosionsschutzes führen.
- Sicherheitshinweise in diesem Kapitel sowie weitere Explosionshinweise in dieser Betriebsanleitung beachten.
- Die Anforderungen der ATEX-Richtlinie beachten.
- Die Angaben der jeweiligen Vorschriften zur Installation und zum Einsatz in explosionsgefährdeten Bereichen (z. B. IEC 60079-11, IEC 60079-10 und IEC 60079-14) sind zu beachten.

1.1 Symbolerklärung

GEFAHR!
... weist auf eine möglicherweise gefährliche Situation im explosionsgefährdeten Bereich hin, die zum Tod oder zu schweren Verletzungen führen kann, wenn sie nicht gemieden wird.

14232232.02 11/2017 EN/DE/FR/ES

1. Sicherheit

1.2 Bestimmungsgemäße Verwendung

Diese Thermometer sind geeignet zur Temperaturmessung bei industriellen Anwendungen in explosionsgefährdeten Bereichen.

Die Geräte sind ausschließlich für den hier beschriebenen bestimmungsgemäßen Verwendungszweck konzipiert und konstruiert und dürfen nur dementsprechend verwendet werden.

DE

Überprüfen, ob die Klassifizierung für den Einsatzfall geeignet ist (siehe Ex-Kennzeichnung, Kapitel 1.5 „Beschilderung, Sicherheitskennzeichnungen“). Die jeweiligen nationalen Vorschriften und Bestimmungen beachten.

Das Nichtbeachten der Angaben für den Einsatz in explosionsgefährdeten Bereichen führt zum Verlust des Explosionsschutzes. Grenzwerte und technische Angaben einhalten (siehe Datenblatt).

Ansprüche jeglicher Art aufgrund von nicht bestimmungsgemäßer Verwendung sind ausgeschlossen.

1.3 Verantwortung des Betreibers

Die Verantwortung über die Zoneneinteilung unterliegt dem Anlagenbetreiber und nicht dem Hersteller/Lieferanten der Betriebsmittel.

1.4 Personalqualifikation

Das Fachpersonal muss Kenntnisse haben über Zündschutzarten, Vorschriften und Verordnungen für Betriebsmittel in explosionsgefährdeten Bereichen.

14232232.02 11/2017 EN/DE/FR/ES

DE

1. Sicherheit

1.5 Beschilderung, Sicherheitskennzeichnungen

Typenschild (Beispiel)

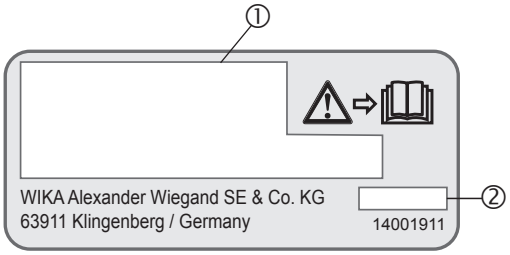

① Typ
② Herstellungsjahr

Kennzeichnung auf dem Zifferblatt
- Ex-Kennzeichnung
- Seriennummer

Ex-Kennzeichnung
II 2G Ex h IIC T6 ... T1 Gb X
II 2D Ex h IIIC T85 °C ... T450 °C Db X

Zeichen	Bezeichnung	Bedeutung
CE	CE-Zeichen	Europäische Konformität
Ex	Spezifische Kennzeichnung für Explosionsschutz	Ex-Symbol
II	Symbol der Gerätegruppe	Geräte, die zur Verwendung in anderen Bereichen bestimmt sind, als Untertagebetrieben von Bergwerken sowie deren Übertageanlagen, die durch Grubengas und/oder brennbare Stäube gefährdet werden können und die durch eine explosionsfähige Atmosphäre gefährdet werden können.

14232232.02 11/2017 EN/DE/FR/ES

1. Sicherheit

Zeichen	Bezeichnung	Bedeutung
2	Symbol der Gerätekategorie	Hohe Sicherheit, geeignet für Zone 1 und 21
G	Ex-Atmosphäre	Für Bereiche, in denen explosionsfähige Gas-, Dampf-, Nebel- oder Luftgemische vorhanden sind
D	Ex-Atmosphäre	Für Bereiche, in denen Staub explosionsfähige Atmosphären bilden kann
Ex	Ex-Kennzeichnung	Normen ISO 80079-36 und ISO 80079-37 angewendet
h	Zündschutzart	Nicht-elektrische Geräte für den Einsatz in explosionsfähigen Atmosphären Eine Zündschutzart wird für den Buchstaben „h“ nicht angewendet.
IIC	Geeignete Atmosphäre	Gas-Atmosphäre Gruppe IIC
IIIC	Geeignete Atmosphäre	Brennbare Schwebstoffe, nicht-leitfähiger Staub und leitfähiger Staub
T6 ... T1	Maximale Oberflächen-temperatur	Symbol, das die Temperaturklasse angibt Die tatsächliche maximale Oberflächen-temperatur hängt nicht vom Gerät selbst ab, sondern hauptsächlich von den Betriebs-bedingungen.
T85 °C ... T450 °C	Maximale Oberflächen-temperatur	Maximale Oberflächentemperatur Die tatsächliche maximale Oberflächen-temperatur hängt nicht vom Gerät selbst ab, sondern hauptsächlich von den Betriebs-bedingungen.
Gb **Db**	Geräteschutzniveau (EPL)	Potenzielle Zündquellen, die im Normal-betrieb und bei zu erwartenden Störungen wirksam sind oder wirksam werden können
X	Besondere Anwen-dungsbedingungen siehe Betriebsan-leitung	Umgebungstemperatur mit speziellem Bereich Es gelten besondere Einsatzbedingungen.

Vor Montage und Inbetriebnahme des Gerätes unbedingt die Betriebsanleitung lesen!

DE

14232232.02 11/2017 EN/DE/FR/ES

DE

2. Inbetriebnahme, Betrieb / 3. Besondere ...

2. Inbetriebnahme, Betrieb

GEFAHR!
Lebensgefahr bei fehlender Geräteerdung
Bei fehlender oder falscher Geräteerdung besteht die Gefahr von gefährlicher Spannung (hervorgerufen durch z. B. mechanische Beschädigung, elektrostatische Aufladung oder Induktion).
► Thermometer erden!

Besondere Bedingungen beachten (siehe Kapitel 3 „Besondere Bedingungen für die Verwendung (X-Bedingungen)“).

3. Besondere Bedingungen für die Verwendung (X-Bedingungen)

1) **Auslegungstemperaturen**
Umgebungstemperatur:
- Typ 73:
  -40 ... +60 °C ohne lebensmitteltaugliche Flüssigkeitsdämpfung
- Typ 74:
  -40 ... +60 °C ohne lebensmitteltaugliche Flüssigkeitsdämpfung
  0 ... 60 °C bei lebensmitteltauglicher Flüssigkeitsdämpfung

Messstofftemperatur: -200 … +700 °C

Dauerbelastung (1 Jahr): Messbereich (EN 13190)
Kurzzeitig (max. 24 h): Anzeigebereich (EN 13190)

Oberflächentemperatur für ATEX-Anwendung beachten:
Die zulässige Messstofftemperatur hängt außer von der Gerätebauart auch von der Zündtemperatur der umgebenden Gase, Dämpfe bzw. Staub ab. Beide Aspekte berücksichtigen.

14232232.02 11/2017 EN/DE/FR/ES

3. Besondere Bedingungen für die Verwendung ...

DE

2) **Maximale Oberflächentemperatur**
Bei Geräten mit Flüssigkeitsfüllung ist sicherzustellen, dass die Oberflächentemperatur der Anwendung unter 100 °C liegt, sodass aus freigesetzter Flüssigkeitsfüllung keine Zündquelle entstehen kann. Dies kann nur erreicht werden, wenn heiße Betriebsmittel und Teile, die heiße Medien enthalten, entsprechend isoliert sind.

Die Oberflächentemperatur hängt hauptsächlich von der Temperatur des Messstoffs und der Umgebung ab. Das Gerät selbst enthält keine Wärmequellen. Falls es, auch im Falle von erwarteten Fehlfunktionen, nicht möglich ist, die tatsächliche Oberflächentemperatur zu bestimmen, ist vorbeugend die maximale Messstofftemperatur als maximale Oberflächentemperatur zu betrachten. Geräte mit Kapillarleitung (Typen F73.100 und F73.160) sind von dieser Begrenzung ausgeschlossen.

Geräte zum Einsatz in explosionsgefährdeten Gas/Luft-, Dampf/Luft- und Nebel/Luft-Atmosphären:

Temperaturklasse (Gasanwendung)	Maximal zulässige Oberflächentemperatur (bei der Endanwendung)
T6	+80 °C
T5	+95 °C
T4	+100 °C (+130 °C) [1)]
T3	+100 °C (+195 °C) [1)]
T2	+100 °C (+290 °C) [1)]
T1	+100 °C (+440 °C) [1)]

1) nur für Geräte ohne Flüssigkeitsfüllung

14232232.02 11/2017 EN/DE/FR/ES

DE

3. Besondere Bedingungen für die Verwendung ...

Explosionsgefährdete Staubatmosphäre
Für Stäube ist das Verfahren zur Bestimmung der Zündtemperatur nach ISO/IEC 80079-20-2 anzuwenden. Die Zündtemperatur wird für Staubwolken und Staubschichten getrennt ermittelt.
Für Staubschichten ist die Zündtemperatur abhängig von der Staubschichtdicke nach IEC/EN 60079-14.

Zündtemperatur Staub	Zulässige maximale Messstofftemperatur (im Messsystem)
Staubwolke T_{Wolke}	< 2/3 T_{Wolke}
Staubschicht $T_{Schicht}$	< $T_{Schicht}$ – 75 K – (Reduzierung je nach Schichtdicke)

Die zulässige maximale Messstofftemperatur darf den kleinsten ermittelten Wert auch bei einer Betriebsstörung nicht überschreiten.

Explosionsgefährdete Atmosphäre aus hybriden Gemischen
Die Geräte dürfen nicht in Bereichen eingesetzt werden, in denen eine Atmosphäre aus explosionsfähigen hybriden Gemischen (Stäube gemischt mit Gasen) entstehen kann.

3) Das Gerät so anbringen, dass die zulässigen Umgebungs- und Messstofftemperaturgrenzen, auch unter Berücksichtigung des Einflusses von Konvektion und Wärmestrahlung, weder unter- noch überschritten werden.
4) Die Geräte über den Prozessanschluss erden. Deshalb sollten am Prozessanschluss elektrisch leitende Dichtungen verwendet werden. Alternativ sind andere Maßnahmen zur Erdung zu ergreifen. Externe Quellen sind von der Endanwendung abhängig und müssen vom Endanwender bewertet werden.
5) Den Umgang mit Werkstoffen vermeiden, die gefährlich mit den für das Gerät verwendeten Werkstoffen reagieren und die selbstentzündlich sind.

14232232.02 11/2017 EN/DE/FR/ES

3. Besondere Bedingungen für die Verwendung ...

DE

6) Vermeidung von Vibration
Anforderungen an die Einbaustelle
Ist die Leitung zum Gerät für eine erschütterungsfreie Anbringung nicht stabil genug, sollte die Befestigung mittels Gerätehalterung erfolgen. Können Erschütterungen nicht durch geeignete Installationen vermieden werden, dann Geräte mit Flüssigkeitsfüllung einsetzen. Die Geräte vor grober Verschmutzung und starken Schwankungen der Umgebungstemperatur schützen.

Zulässige Schwingungsbelastung am Einbauort
Die Geräte grundsätzlich nur an Stellen ohne Schwingungsbelastung einbauen. Gegebenenfalls kann z. B. durch eine flexible Verbindungsleitung von der Messstelle zum Gerät und die Befestigung über eine Messgerätehalterung eine Entkopplung vom Einbauort erreicht werden. Ist das nicht möglich, dann folgende Grenzwerte nicht überschreiten:
Frequenzbereich < 150 Hz
Beschleunigung < 0,5 g

7) Bei Verwendung von Schutzrohren möglichst durch Einfüllen eines Wärmekontaktmittels den Wärmeübertragungswiderstand zwischen Fühleraußenwand und Schutzrohrinnenwand reduzieren. Die Arbeitstemperatur der Wärmeleitpaste beträgt -40 ... +200 °C.

8) Das Thermometer mit einem feuchten Tuch reinigen. Darauf achten, dass durch die Reinigung keine elektrostatische Aufladung erzeugt wird.

9) Alle Zubehörteile (z. B. Schutzrohre oder Befestigungselemente) müssen vom Endanwender zusammen mit den gelieferten Geräten geprüft werden. Insbesondere die Anforderungen zur Erdung und zur Vermeidung elektrostatischer Aufladungen sind zu beachten.

14232232.02 11/2017 EN/DE/FR/ES

DE

3. Besondere Bedingungen für die Verwendung ...

10) Zündgefahranalyse

Einschlägige identifizierte Zündgefahren	Realisierte Schutzmaßnahmen
Heiße Oberflächen	■ Die tatsächliche Oberflächentemperatur hängt von der Anwendung ab, d. h. von der Messstoff-temperatur ■ Kennzeichnung des Temperaturbereichs; Kenn-zeichnung T-Bereich ■ Überwachung der Lesbarkeit der Kennzeichnung ▶ Informationen in der Betriebsanleitung
Mechanisch erzeugte Funken und heiße Oberflächen	■ Geringe Kontaktgeschwindigkeit ■ Einschränkung von Vibrationen ■ Auswahl geeigneter Materialien ▶ Informationen in der Betriebsanleitung
Elektrische Ableitströme, kathodischer Korrosionsschutz	■ Erdung über Prozessanschluss erforderlich ▶ Informationen in der Betriebsanleitung
Statische Elektrizität	■ Keine Gleitstielbüschelentladung ■ Alle leitfähigen Teile verbunden ■ Begrenzung der projizierten Fläche nicht leiten-der Teile ■ Begrenzung der Schichtdicke nicht leitender Teile ■ Erdung über Prozessanschluss erforderlich ■ Beschreibung des Reinigungsprozesses ▶ Informationen in der Betriebsanleitung
Exotherme Reaktio-nen, einschließlich Selbstentzündung von Stäuben	■ Bereitstellung der Materialdaten messstoffbe-rührter Bauteile für den Kunden, um die Verwen-dung kritischer Messstoffe zu vermeiden ▶ Informationen in der Betriebsanleitung

11) Die Lesbarkeit der Kennzeichnung muss während der Dauer der Verwendung, jedoch mindestens während eines Prüfzeitraums von drei Jahren kontrolliert werden. Sollte die Lesbarkeit beeinträchtigt sein, den Hersteller bitten, die Kennzeichnung zu erneuern.

14232232.02 11/2017 EN/DE/FR/ES

Anlage: EU-Konformitätserklärung

DE

WIKA

EU-Konformitätserklärung
EU Declaration of Conformity

Dokument Nr.:
Document No.: 11603917.03

Wir erklären in alleiniger Verantwortung, dass die mit CE gekennzeichneten Produkte
We declare under our sole responsibility that the CE marked products

Typenbezeichnung:
Type Designation:

Model 73:
A73.100 + option ATEX / A73.160 + option ATEX /
R73.100 + option ATEX / R73.160 + option ATEX /
S73.100 + option ATEX / S73.160 + option ATEX /
F73.100 + option ATEX / F73.160 + option ATEX

Model 74:
A74.100 + option ATEX / R74.100 + option ATEX

Beschreibung: **Gasdruck-Thermometer**
Description: ***Gas-actuated thermometer***

gemäß gültigem Datenblatt: TM73.01
according to the valid data sheet: TM74.01

die grundlegenden Schutzanforderungen der folgenden Richtlinien erfüllen:
comply with the essential protection requirements of the directives:

Harmonisierte Normen:
Harmonized standards:

2014/34/EU Explosionsschutz (ATEX) (1) — EN ISO 80079-36:2016
2014/34/EU Explosion protection (ATEX) (1) — EN ISO 80079-37:2016

Ex II 2G Ex h IIC T6 ... T1 Gb X
II 2D Ex h IIIC T85 °C ... T450 °C Db X

(1) Konformitätsbewertungsverfahren „Interne Fertigungskontrolle". Die Dokumentation ist hinterlegt bei benannter Stelle TÜV NORD CERT GmbH, Essen (Nr. 0044), Aktenmummer 8000550764.
Conformity assessment procedure "Internal Control of Production". The Documentation is deposited at notified body TÜV NORD CERT GmbH, Essen (no. 0044), reference number 8000550764.

Unterzeichnet für und im Namen von / *Signed for and on behalf of*

WIKA Alexander Wiegand SE & Co. KG

Klingenberg, 2017-07-27

Thorsten Seefried, Vice President
Process Gauges

Michael Glombitza, Head of Quality Management
Process Gauges

WIKA Alexander Wiegand SE & Co. KG
Alexander-Wiegand-Straße 30
63911 Klingenberg
Germany

Tel. +49 9372 132-0
Fax +49 9372 132-406
E-Mail info@wika.de
www.wika.de

Kommanditgesellschaft: Sitz Klingenberg – Amtsgericht Aschaffenburg HRA 1819
Komplementärin: WIKA Verwaltungs SE & Co. KG – Sitz Klingenberg – Amtsgericht Aschaffenburg HRA 4685

Komplementärin:
WIKA International SE - Sitz Klingenberg - Amtsgericht Aschaffenburg HRB 10505
Vorstand: Alexander Wiegand
Vorsitzender des Aufsichtsrats: Dr. Max Egli

14232232.02 11/2017 EN/DE/FR/ES

DE

14232232.02 11/2017 EN/DE/FR/ES

Sommaire

1. Sécurité	28
2. Mise en service, utilisation	32
3. Conditions spécifiques d'utilisation (conditions X)	32
Annexe : Déclaration de conformité UE	37

FR

Déclarations de conformité disponibles sur www.wika.fr.

14232232.02 11/2017 EN/DE/FR/ES

Informations complémentaires WIKA types 73, 74 (ATEX)	27

1. Sécurité

Documentation supplémentaire :
- Ces informations complémentaires concernant les zones explosives s'appliquent en conjonction avec le mode d'emploi “Thermomètre à dilatation de gaz, types 73, 74, 75” (numéro d'article 12099431).

FR

1. Sécurité

DANGER !
Danger de mort due à la perte de la protection contre les explosions
Le non respect de ces instructions et de leurs contenus peut entraîner une perte de la protection contre les explosions.
- Observer les instructions de sécurité de ce chapitre et les autres instructions liées aux explosions de ce mode d'emploi.
- Respecter les exigences de la directive ATEX.
- Respecter les indications des prescriptions nationales respectives concernant le montage et l'utilisation en zone explosive (par exemple CEI 60079-11, CEI 60079-10 et CEI 60079-14).

1.1 Explication des symboles

DANGER !
... indique une situation en zone explosive présentant des risques susceptibles de provoquer la mort ou des blessures graves si elle n'est pas évitée.

14232232.02 11/2017 EN/DE/FR/ES

1. Sécurité

1.2 Utilisation conforme à l'usage prévu

Ces thermomètres sont utilisés à des fins de mesure de la température dans le cadre d'applications industrielles en zone explosive.

Ces instruments sont conçus et construits exclusivement pour une utilisation conforme à l'usage prévu décrit ici, et ne doivent être utilisés qu'à cet effet.

Contrôler que la classification est adaptée à l'application (voir marquage Ex, chapitre 1.5 “Etiquetage, marquages de sécurité”). Observer les réglementations nationales concernées.

FR

Le non-respect des instructions pour utilisation en zones explosives peut conduire à la perte de la protection contre les explosions. Correspondre aux valeurs limites et instructions suivantes (voir fiche technique).

Aucune réclamation ne peut être recevable en cas d'utilisation non conforme à l'usage prévu.

1.3 Responsabilité de l'opérateur

La classification des zones est une responsabilité qui incombe à l'exploitant du site et non au fabricant/fournisseur de l'équipement.

1.4 Qualification du personnel

Le personnel qualifié doit avoir les connaissances requises des types de protection contre l'ignition, des règlementations et dispositions concernant les équipements en zones explosives.

14232232.02 11/2017 EN/DE/FR/ES

FR

1. Sécurité

1.5 Etiquetage, marquages de sécurité

Plaque signalétique (exemple)

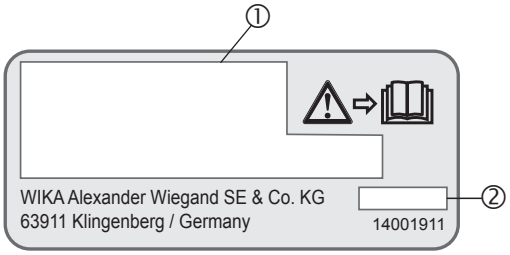

① Type
② Année de fabrication

Marquage sur le cadran
- Marquage Ex
- Numéro de série

Marquage Ex
II 2G Ex h IIC T6 ... T1 Gb X
II 2D Ex h IIIC T85 °C ... T450 °C Db X

Marquage	Désignation	Signification
CE	Marquage CE	Conformité européenne
Ex	Marquage spécifique pour zone explosive	Symbole Ex
II	Symbole du groupe d'instrument	Equipements ne pouvant être utilisés dans les parties souterraines des mines, et dans les parties des installations de surface de ces mines qui risqueraient d'être mises en danger par le coup de grisou et/ou des poussières combustibles et une atmosphère explosive

14232232.02 11/2017 EN/DE/FR/ES

1. Sécurité

Marquage	Désignation	Signification
2	Symbole de la catégorie d'équipement	Sécurité Haute, homologation pour zones 1 et 21
G	Atmosphère Ex	Concernant les atmosphères explosives par présence de gaz, de vapeurs ou de brouillard
D	Atmosphère Ex	Concernant les atmosphères explosives par présence de poussière
Ex	Marquage Ex	Standards appliqués ISO 80079-36 et ISO 80079-37
h	Type de protection contre l'ignition	Equipement non-électrique pour atmosphères explosives Une de protection contre l'ignition n'est pas appliqué à la lettre “h”.
IIC	Atmosphère convenable	Atmosphère de gaz Groupe IIC
IIIC	Atmosphère convenable	Poussières combustibles en suspension, poussière non-conductrice et poussière conductrice
T6 ... T1	Température de surface maximale	Symbole indiquant la classe de température La température de surface maximale réelle ne dépend pas de l'équipement lui-même, mais principalement des conditions de fonctionnement.
T85 °C ... T450 °C	Température de surface maximale	Température de surface maximale La température de surface maximale réelle ne dépend pas de l'équipement lui-même, mais principalement des conditions de fonctionnement.
Gb **Db**	Niveau de protection d'équipement (EPL : Equipment Protection Level)	Sources de combustion potentielle qui sont effectives ou peuvent devenir effectives en fonctionnement normal et en dysfonctionnement prévisible
X	Pour les conditions spécifiques d'utilisation, voir le mode d'emploi	Plage de température ambiante avec échelle spéciale Des conditions particulières d'utilisation s'appliquent.

Lire impérativement le mode d'emploi avant le montage et la mise en service de l'instrument !

14232232.02 11/2017 EN/DE/FR/ES

FR

2. Mise en service ... / 3. Conditions spécifiques ...

2. Mise en service, utilisation

DANGER !
Danger vital dû à une absence de mise à la terre de l'appareil
Si la mise à la terre est absente ou incorrecte, il y a un risque de tensions dangereuses (conduisant, par exemple, à des dommages mécaniques, à des charges électrostatiques ou à une induction).
▶ Mettre le thermomètre à la terre !

FR

Observer les conditions spéciales (voir chapitre 3 “Conditions spécifiques d‘utilisation (conditions X)”).

3. Conditions spécifiques d'utilisation (conditions X)

1) **Températures de conception**
Température ambiante :
- Type 73 :
  -40 … +60 °C sans liquide amortisseur compatible avec les produits alimentaires
- Type 74 :
  -40 … +60 °C sans liquide amortisseur compatible avec les produits alimentaires
  0 … 60 °C avec liquide amortisseur compatible avec les produits alimentaires

Température fluide: -200 ... +700 °C

Fonctionnement continu (1 an) : étendue de mesure (EN 13190)
Temporaire (max. 24 h) : échelle de mesure (EN 13190)

Respectez la température de surface pour une application ATEX : La température admissible du fluide ne dépend pas seulement de la fabrication de l'instrument, mais également de la température d'ignition des gaz, vapeurs ou poussières environnants. Ces deux aspects doivent être pris en compte.

14232232.02 11/2017 EN/DE/FR/ES

3. Conditions spécifiques d'utilisation (conditions X)

2) **Température de surface maximale**
Pour les instruments avec remplissage de liquide, s'assurer que la température de surface de l'application soit inférieure à 100 °C, de sorte que le remplissage de liquide libéré ne puisse pas donner lieu à une source d'inflammation efficace. Cela ne peut être réalisé qu'en utilisant une isolation appropriée de l'équipement chaud et des pièces qui contiennent des fluides chauds.

La température de surface dépend principalement de la température du fluide et de la température ambiante. L'instrument lui-même ne contient aucune source de chauffage. A titre préventif, considérer la température du fluide maximale comme la température de surface maximale, s'il n'est pas possible de déterminer la température de la surface réelle même dans le cas de dysfonctionnements prévus. Les instruments avec capillaire (types F73.100 et F73.160) sont exclus de cette restriction.

Instruments pour une utilisation dans des atmosphères explosives gaz/air, vapeur/air et brouillard/air :

Classe de température (application de gaz)	Température de surface maximum admissible (pour l'application finale)
T6	+80 °C
T5	+95 °C
T4	+100 °C (+130 °C) [1]
T3	+100 °C (+195 °C) [1]
T2	+100 °C (+290 °C) [1]
T1	+100 °C (+440 °C) [1]

1) seulement pour des instruments sans remplissage de liquide

FR

14232232.02 11/2017 EN/DE/FR/ES

3. Conditions spécifiques d'utilisation (conditions X)

FR

Atmosphère poussiéreuse dangereuse
Pour les poussières, la procédure spécifiée dans la norme ISO/CEI 80079-20-2 pour déterminer la température d'ignition doit être appliquée. La température d'ignition est déterminée séparément pour des nuages de poussière et des couches de poussière. Pour les couches de poussière, la température d'ignition dépend de l'épaisseur de la couche de poussière selon CEI/EN 60079-14.

Température d'ignition de la poussière	Température du fluide admissible maximale (dans le système de mesure)
Nuage de poussière T_{Nuage}	< 2/3 T_{Nuage}
Couche de poussière T_{Couche}	< T_{Couche} – 75 K – (réduction en fonction de l'épaisseur de la couche)

La température du fluide maximale admissible ne doit pas dépasser la valeur minimale déterminée, même en cas de dysfonctionnement.

Atmosphère explosive composée de mélanges hybrides
Les instruments ne doivent pas être utilisés dans des zones où une atmosphère composée de mélanges hybrides explosifs (poussières mélangées avec des gaz) peut se produire.

3) Installer l'instrument de telle manière que la température ne soit pas inférieure ou supérieure aux température du fluide ambiantes admissibles, même si la convection et la dissipation de la chaleur sont prises en compte.
4) Les instruments doivent être mis à la terre à l'aide du raccord process. C'est pourquoi des joints d'étanchéité conducteurs d'électricité doivent être utilisés sur le raccord process. Comme alternative, prendre d'autres mesures pour la mise à la terre. Les sources externes dépendent de l'application finale et doivent être évaluées par l'utilisateur final.
5) Eviter de manipuler des matériaux qui réagissent dangereusement avec les matériaux utilisés pour l'instrument et des substances qui ont tendance à une combustion spontanée.

14232232.02 11/2017 EN/DE/FR/ES

3. Conditions spécifiques d'utilisation (conditions X)

6) Eviter les vibrations
Exigences relatives au point de montage
Si la conduite au point de mesure n'est pas assez stable, il est recommandé de fixer l'instrument au moyen d'un support approprié. S'il n'est pas possible d'éviter les vibrations par un montage approprié, il convient d'utiliser des instruments avec remplissage de liquide. Les instruments doivent être protégés contre un encrassement important et contre d'importantes fluctuations de la température ambiante.

Contrainte de vibration admissible sur le point de montage
Les instruments ne doivent être installés que dans des endroits exempts de vibrations. Si nécessaire, il est possible d'isoler l'instrument du lieu d'installation en utilisant par exemple une ligne de raccordement flexible entre le point de mesure et l'instrument et en fixant ce dernier à l'aide d'un support d'instrument mural. Lorsque cela n'est pas possible, veiller à ce que les valeurs limites suivantes ne soient pas dépassées :
Plage de fréquence < 150 Hz
Accélération < 0,5 g

7) En cas d'utilisation de doigts de gants, il convient de réduire au maximum la résistance de transmission de la chaleur entre la paroi extérieure du capteur et la paroi intérieure du doigt de gant en ajoutant un agent de contact thermique. La température de service de la pâte thermique est de -40 ... +200 °C.

8) Nettoyer le thermomètre avec un chiffon humide. Assurez-vous que le nettoyage ne provoquera aucune charge électrostatique.

9) Tous les accessoires (par exemple doigts de gant ou composants de fixation) doivent être évalués en combinaison avec les instruments fournis par l'utilisateur final. En particulier, il faut tenir compte des exigences relatives à la mise à la terre et à la prévention des charges électrostatiques.

FR

14232232.02 11/2017 EN/DE/FR/ES

FR

3. Conditions spécifiques d'utilisation (conditions X)

10) Analyse des risques d'inflammation

Risques de combustion identifiés	Mesures de protection mises en oeuvre
Surfaces chaudes	■ La température de surface actuelle dépend de l'application ; seulement température du fluide ■ Marquage de la plage de température ; marquage “T range” ■ Respect de la lisibilité du marquage ▶ Informations fournies dans le mode d'emploi
Etincelles générées mécaniquement et surfaces chaudes	■ Faible vitesse de contact ■ Limitation des vibrations ■ Sélection de matériaux adéquats ▶ Informations fournies dans le mode d'emploi
Courants électriques vagabonds, protection contre la corrosion cathodique	■ Mise à la terre par raccord process nécessaire ▶ Informations fournies dans le mode d'emploi
Electricité statique	■ Pas de décharge de brosse de propagation ■ Liaison de toutes les pièces conductrices ■ Limitation de la surface projetée des pièces non-conductrices ■ Limitation de l'épaisseur de couche des pièces non-conductrices ■ Mise à la terre par raccord process nécessaire ■ Description du processus de nettoyage ▶ Informations fournies dans le mode d'emploi
Réactions exothermiques, y compris auto-inflammation des poussières	■ Données sur les matériaux des parties en contact avec le fluide pour le client afin d‘éviter d‘utiliser des matériaux critiques ▶ Informations fournies dans le mode d'emploi

11) La lisibilité du marquage doit être observée pendant le temps d'utilisation, mais au moins pendant les périodes d'inspection de trois ans. Si la lisibilité est endommagée, contacter le fabricant pour renouveler le marquage.

14232232.02 11/2017 EN/DE/FR/ES

Annexe : Déclaration de conformité UE

FR

WIKA

Déclaration de Conformité UE
Declaración de Conformidad UE

Document No.:
Documento Nº: 11603917.03

Nous déclarons sous notre seule responsabilité que les appareils marqués CE
Declaramos bajo nuestra sola responsabilidad, que los equipos marcados CE

Type:
Modelo:

Model 73:
A73.100 + option ATEX / A73.160 + option ATEX /
R73.100 + option ATEX / R73.160 + option ATEX /
S73.100 + option ATEX / S73.160 + option ATEX /
F73.100 + option ATEX / F73.160 + option ATEX

Model 74:
A74.100 + option ATEX / R74.100 + option ATEX

Description: **Thermomètre à dilatation**
Descripción: ***Termómetro de dilatación***

selon fiche technique valide: TM73.01
según ficha técnica en vigor: TM74.01

conformes aux exigences essentielles de sécurité de la (les) directive(s): Normes appliquées et harmonisées
cumplen con los requerimientos esenciales de seguridad de las Directivas: *Normas aplicadas y armonizadas*

2014/34/UE Protection contre l'explosion (ATEX) (1) — EN ISO 80079-36:2016
2014/34/UE Protección contra explosión (ATEX) (1) — EN ISO 80079-37:2016

Ex II 2G Ex h IIC T6 ... T1 Gb X
II 2D Ex h IIIC T85 °C ...T450 °C Db X

(1) Procédures d'évaluation de la conformité "Contrôle Interne de Fabrication". Documentation déposée à l'organisme notifié TÜV Nord CERT GmbH, D-45141 Essen (reg. no. 0044), numéro de de référence 8000550764.
Procedimiento de evaluación de la conformidad "Control Interno de la Fabricación". Documentación notificada al organismo TÜV Nord CERT GmbH, D-45141 Essen (reg. no. 0044), numero de expediente 8000550764.

Signé a l'intention et au nom de / *Firmado en nombre y por cuenta de*

WIKA Alexander Wiegand SE & Co. KG
Klingenberg, 2017-07-27

Thorsten Seefried, Vice President
Process Gauges

i.V. Michael Glombitza, Head of Quality Management
Process Gauges

WIKA Alexander Wiegand SE & Co. KG
Alexander-Wiegand-Straße 30
63911 Klingenberg
Germany

Tel. +49 9372 132-0
Fax +49 9372 132-406
E-Mail info@wika.de
www.wika.de

Kommanditgesellschaft: Sitz Klingenberg – Amtsgericht Aschaffenburg HRA 1819
Komplementärin: WIKA Verwaltungs SE & Co. KG – Sitz Klingenberg – Amtsgericht Aschaffenburg HRA 4685

Komplementärin:
WIKA International SE - Sitz Klingenberg - Amtsgericht Aschaffenburg HRB 10505
Vorstand: Alexander Wiegand
Vorsitzender des Aufsichtsrats: Dr. Max Egli

14232232.02 11/2017 EN/DE/FR/ES

FR

14232232.02 11/2017 EN/DE/FR/ES

Contenido

1. Seguridad	40
2. Puesta en servicio, funcionamiento	44
3. Condiciones especiales para la utilización (Condiciones X)	44
Anexo: Declaración de conformidad UE	49

ES

Declaraciones de conformidad puede encontrar en www.wika.es.

14232232.02 11/2017 EN/DE/FR/ES

Información adicional de WIKA modelos 73, 74 (ATEX)	39

1. Seguridad

Documentación complementaria:
- Esta información adicional para atmósferas potencialmente explosivas es válida junto con el manual de instrucciones "Termómetro de dilatación de gas, modelos 73, 74, 75" (Nº de artículo 12099431).

ES

1. Seguridad

¡PELIGRO!
Peligro de muerte debido a la pérdida de la protección contra explosiones
La inobservancia del contenido y de las instrucciones puede originar la pérdida de la protección contra explosiones.
- Observe las instrucciones de seguridad en este capítulo y otros avisos sobre peligros de explosión en este manual de instrucciones.
- Tener en cuenta los requisitos de la directiva ATEX.
- Cumplir con las regulaciones indicadas en los correspondientes reglamentos nacionales para la instalación y uso en zonas potencialmente explosivas (p. ej. IEC 60079-11, IEC 60079-10 y IEC 60079-14).

1.1 Explicación de símbolos

¡PELIGRO!
... señala una situación de peligro potencial en la zona potencialmente explosiva, lo que puede provocar la muerte o lesiones graves si no se evita.

14232232.02 11/2017 EN/DE/FR/ES

1. Seguridad

1.2 Uso conforme a lo previsto

Estos termómetros son aptos para la medición de temperatura en aplicaciones industriales en zonas potencialmente explosivas.

Los instrumentos han sido diseñados y construidos únicamente para la finalidad aquí descrita y deben utilizarse en conformidad a la misma.

Compruebe idoneidad de la clasificación para la aplicación (véase la marca Ex, capítulo 1.5 “Rótulos, marcajes de seguridad”). Tenga en consideración las respectivas leyes y reglamentos nacionales.

La inobservancia de la información para su uso en zonas potencialmente explosivas conduce a la pérdida de la protección contra explosiones. Observar los valores límite y las indicaciones técnicas (véase la hoja técnica).

No se admite ninguna reclamación debido a una utilización no conforme a lo previsto.

1.3 Responsabilidad del usuario

La responsabilidad para la clasificación de zonas le corresponde a la empresa explotadora/operadora de la planta y no al fabricante/proveedor de los equipos eléctricos.

1.4 Cualificación del personal

El personal técnico debe tener conocimientos sobre los tipos de protección contra incendios, los reglamentos y las directivas referentes a equipos en zonas potencialmente explosivas.

14232232.02 11/2017 EN/DE/FR/ES

ES

1. Seguridad

1.5 Rótulos, marcajes de seguridad

Placa de identificación (ejemplo)

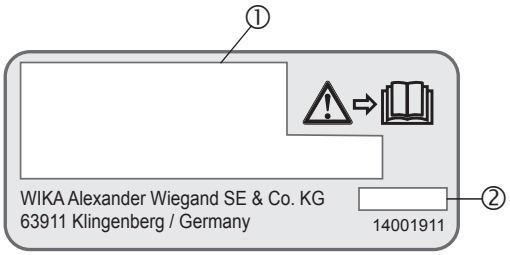

① Modelo
② Año de fabricación

Marcaje en la esfera
- Marcaje Ex
- Número de serie

Marcaje Ex
II 2G Ex h IIC T6 ... T1 Gb X
II 2D Ex h IIIC T85 °C ... T450 °C Db X

Marcado	Denominación	Significado
CE	Marcado CE	Conformidad europea
Ex	Marcado específico para protección antiexplosiva	Símbolo Ex
II	Símbolo del grupo de equipo	Dispositivos destinados a la utilización en otros campos que las partes subterráneas de las minas y las partes de las instalaciones de superficie de estas minas, para los cuales el grisú y/o los polvos inflamables y una atmósfera potencialmente explosiva pueden presentar un peligro.

14232232.02 11/2017 EN/DE/FR/ES

1. Seguridad

Marcado	Denominación	Significado
2	Símbolo de la categoría de equipo	Alta seguridad, apto para zona 1 y 21
G	Atmósfera Ex	Para áreas con mezclas de gas, vapor, niebla o aire explosivas
D	Atmósfera Ex	Para áreas con riesgo de formación de atmósferas explosivas debido a polvo
Ex	Marcaje Ex	Normas ISO 80079-36 y ISO 80079-37 aplicadas
h	Tipo de protección	Equipos no eléctricos para la utilización en atmósferas explosivas No se aplica un tipo de protección para la letra “h”.
IIC	Atmósfera apta	Atmósfera gaseosa grupo IIC
IIIC	Atmósfera apta	Sustancias en suspensión inflamables, polvo no conductor y polvo conductor
T6 ... T1	Temperatura superficial máxima	Símbolo que indica la clase de temperatura La temperatura superficial máxima efectiva no depende del propio equipo sino principalmente de las condiciones de funcionamiento.
T84 °C ... T450 °C	Temperatura superficial máxima	Temperatura superficial máxima La temperatura superficial máxima efectiva no depende del propio equipo sino principalmente de las condiciones de funcionamiento.
Gb **Db**	Nivel de protección de los equipos (EPL)	Potenciales fuentes de ignición que tienen efecto o pueden tener efecto en modo de funcionamiento normal y en caso de fallos
X	Para condiciones de aplicación especiales, véase el manual de instrucciones	Temperatura ambiente con área especial Rigen condiciones de uso especiales.

¡Es absolutamente necesario leer el manual de instrucciones antes del montaje y la puesta en servicio del instrumento!

14232232.02 11/2017 EN/DE/FR/ES

2. Puesta en servicio ... / 3. Condiciones ...

2. Puesta en servicio, funcionamiento

¡PELIGRO!
Riesgo de muerte en caso de falta de puesta a tierra del instrumento
En caso de puesta a tierra inexistente o incorrecta del instrumento existe el riesgo de tensión peligrosa (causada por ej. por daños mecánicos, carga electrostática o inducción).
► ¡Poner a tierra la termorresistencia!

ES

Observar las condiciones especiales (véase el capítulo 3 “Condiciones especiales para la utilización (Condiciones X)”).

3. Condiciones especiales para la utilización (Condiciones X)

1) **Temperaturas de diseño**
Temperatura ambiente:
- Modelo 73:
  -40 ... +60 °C No apto para uso con productos alimentarios ya que no contiene líquido de relleno adecuado
- Modelo 74:
  -40 ... +60 °C No apto para uso con productos alimentarios ya que no contiene líquido de relleno adecuado
  0 … 60 °C con líquido de relleno adecuado para productos alimentarios

Temperatura del medio: -200 … +700 °C

Carga permanente (1 año): Rango de medición (EN 13190)
puntual (máx. 24 h): rango de indicación (EN 13190)

Observar la temperatura superficial para aplicaciones ATEX:
La temperatura del medio admisible depende del tipo de construcción del instrumento y de la temperatura de inflamación de los gases, vapores o polvos en el ambiente. Considerar ambos aspectos.

14232232.02 11/2017 EN/DE/FR/ES

3. Condiciones especiales para la utilización ...

2) **Temperatura superficial máxima**
En dispositivos con líquido de relleno debe asegurarse que la temperatura de la superficie de aplicación sea inferior a 100 °C, de manera que no haya ninguna fuente de ignición producto del escape del líquido de relleno. Esto sólo puede lograrse si el equipo caliente y las partes que contengan fluidos calientes están adecuadamente aislados.

La temperatura superficial depende principalmente de la temperatura del medio y del entorno. El dispositivo en sí no contiene fuente de calor alguna. Si, también en el caso de un mal funcionamiento esperado, no es posible determinar la temperatura real de la superficie, preventivamente debe considerarse la temperatura máxima del medio como la temperatura máxima de la superficie. Los instrumentos con capilares (modelos F73.100 y F73.160) están excluidos de esta limitación.

Instrumentos para uso en atmósferas potencialmente explosivas de gas/aire, vapor/aire y niebla/aire:

Clase de temperatura (Utilización de gas)	Temperatura superficial máxima admisible (en la aplicación final)
T6	+80 °C
T5	+95 °C
T4	+100 °C (+130 °C) [1]
T3	+100 °C (+195 °C) [1]
T2	+100 °C (+290 °C) [1]
T1	+100 °C (+440 °C) [1]

1) solo para instrumentos sin relleno de líquido

ES

14232232.02 11/2017 EN/DE/FR/ES

3. Condiciones especiales para la utilización ...

ES

Atmósfera de polvo potencialmente explosiva
En caso de polvos debe aplicarse el método para determinar la temperatura de ignición según ISO/IEC 80079-20-2. La temperatura de ignición se determina separadamente para las nubes de polvo y las capas de polvo. En caso de capas de polvo, la temperatura de inflamación depende del espesor de la capa de polvo según IEC/EN 60079-14.

Temperatura de ignición en polvo	Temperatura máx. admisible del medio (en el sistema de medición)
Nube de polvo T_{nube}	< 2/3 T_{nube}
Capa de polvo T_{capa}	< T_{capa} – 75 K – (reducción en función del espesor de la capa)

La temperatura máxima admisible del medio no debe sobrepasar el valor mínimo determinado, incluso en caso de fallo de funcionamiento.

Atmósfera potencialmente explosiva de mezclas híbridas
Los dispositivos no deben ser utilizados en áreas en las cuales pueda generarse una atmósfera de mezclas híbridas potencialmente explosivas (polvos mezclados con gases).

3) Colocar el instrumento de tal forma que no se excedan hacia abajo ni hacia arriba los límites de la temperatura ambiente ni la del medio, incluyendo la influencia de convección y la radiación térmica.

4) Poner a tierra los instrumentos a través de la conexión. Por eso, se deben utilizar juntas eléctricamente conductoras en la conexión al proceso. Alternativamente pueden tomar otras medidas para la conexión a tierra. Las fuentes externas dependen de la aplicación final y deben ser evaluadas por el usuario final.

5) Evitar la manipulación de sustancias que puedan reaccionar peligrosamente con las sustancias empleadas para el instrumento y que sean autoinflamables.

14232232.02 11/2017 EN/DE/FR/ES

3. Condiciones especiales para la utilización ...

6) Evitar las vibraciones
Requerimientos en el lugar de instalación
Si el tubo que conecta al instrumento no fuera suficientemente estable para asegurar una conexión exenta de vibraciones, se debería efectuar la sujeción mediante un soporte de aparatos. En el caso de no poder evitar las vibraciones mediante las instalaciones apropiadas, deben utilizarse instrumentos con relleno de líquido. Los instrumentos deben protegerse contra contaminación y fuertes oscilaciones de la temperatura ambiente.

Oscilación admisible en el lugar de instalación
Instalar los instrumentos sólo en lugares sin oscilaciones. Si es necesario, se puede conseguir el desacoplamiento del lugar de instalación mediante un conducto flexible desde el punto de medición al instrumento y una fijación mediante un soporte de instrumento. Si esto no es posible, no sobrepasar los valores límite siguientes en ningún caso:
Rango de frecuencias < 150 Hz
Acceleración < 0,5 g

7) Si se utilizan vainas, reducir la resistencia de transferencia de calor entre la pared exterior del sensor y la pared interior de la vaina llenando ésta con un agente de contacto. La temperatura de trabajo de la pasta térmica está entre -40 ... +200 °C.
8) Limpiar el termómetro con un trapo húmedo. Asegurarse de que debido a la limpieza no se genere una carga electrostática.
9) Todos los accesorios (p. ej. vainas o elementos de fijación) deben ser probados por el usuario final, junto con los dispositivos suministrados. Deben observarse particularmente los requisitos de conexión a tierra y para evitar cargas electrostáticas.

ES

14232232.02 11/2017 EN/DE/FR/ES

ES

3. Condiciones especiales para la utilización ...

10) Análisis del riesgo de ignición

Peligros de ignición identificados pertinentes	Medidas de protección realizadas
Superficies calientes	■ La temperatura superficial efectiva depende de la aplicación, es decir, de la temperatura del medio. ■ Identificación del rango de temperatura; identificación de zona T ■ Supervisión de la legibilidad de la identificación ▶ Información en el manual de instrucciones
Chispas producidas mecánicamente y superficies calientes	■ Velocidad de contacto reducida ■ Restricción de vibraciones ■ Selección de materiales aptos ▶ Información en el manual de instrucciones
Corrientes eléctricas de fuga, protección catódica contra la corrosión	■ Se requiere toma a tierra de la conexión a proceso ▶ Información en el manual de instrucciones
Electricidad estática	■ Sin descarga por propagación del cepillado ■ Todas las piezas conductoras conectadas ■ Limitación de la superficie proyectada de piezas no conductoras ■ Limitación del espesor de capa de piezas no conductoras ■ Se requiere toma a tierra de la conexión a proceso ■ Descripción del proceso de limpieza ▶ Información en el manual de instrucciones
Reacciones exotérmicas, incluyendo autoignición de polvos	■ Puesta a disposición de los datos de materiales de piezas en contacto con el medio para el cliente para evitar la utilización de medios críticos ▶ Información en el manual de instrucciones

11) La legibilidad de la identificación debe controlarse durante la duración de la utilización, pero por lo menos durante un período de comprobación de tres años. Si estuviere afectada la legibilidad, solicitar al fabricante que renueve la identificación.

14232232.02 11/2017 EN/DE/FR/ES

Anexo: Declaración de conformidad UE

WIKA

Déclaration de Conformité UE
Declaración de Conformidad UE

Document No.:
Documento Nº: 11603917.03

Nous déclarons sous notre seule responsabilité que les appareils marqués CE
Declaramos bajo nuestra sola responsabilidad, que los equipos marcados CE

Type:
Modelo:

Model 73:
A73.100 + option ATEX / A73.160 + option ATEX /
R73.100 + option ATEX / R73.160 + option ATEX /
S73.100 + option ATEX / S73.160 + option ATEX /
F73.100 + option ATEX / F73.160 + option ATEX

Model 74:
A74.100 + option ATEX / R74.100 + option ATEX

Description: **Thermomètre à dilatation**
Descripción: ***Termómetro de dilatación***

selon fiche technique valide: TM73.01
según ficha técnica en vigor: TM74.01

conformes aux exigences essentielles de sécurité de la (les) directive(s): Normes appliquées et harmonisées
cumplen con los requerimientos esenciales de seguridad de las Directivas: *Normas aplicadas y armonizadas*

2014/34/UE Protection contre l'explosion (ATEX) (1) — EN ISO 80079-36:2016
2014/34/UE Protección contra explosión (ATEX) (1) — EN ISO 80079-37:2016

Ex II 2G Ex h IIC T6 ... T1 Gb X
II 2D Ex h IIIC T85 °C ...T450 °C Db X

(1) Procédures d'évaluation de la conformité "Contrôle Interne de Fabrication". Documentation déposée à l'organisme notifié TÜV Nord CERT GmbH, D-45141 Essen (reg. no. 0044), numéro de de référence 8000550764.
Procedimiento de evaluación de la conformidad "Control Interno de la Fabricación". Documentación notificada al organismo TÜV Nord CERT GmbH, D-45141 Essen (reg. no. 0044), numero de expediente 8000550764.

Signé a l'intention et au nom de / *Firmado en nombre y por cuenta de*

WIKA Alexander Wiegand SE & Co. KG

Klingenberg, 2017-07-27

Thorsten Seefried, Vice President
Process Gauges

Mjchael Glombitza, Head of Quality Management
Process Gauges

WIKA Alexander Wiegand SE & Co. KG
Alexander-Wiegand-Straße 30
63911 Klingenberg
Germany

Tel. +49 9372 132-0
Fax +49 9372 132-406
E-Mail info@wika.de
www.wika.de

Kommanditgesellschaft: Sitz Klingenberg – Amtsgericht Aschaffenburg HRA 1819
Komplementärin: WIKA Verwaltungs SE & Co. KG – Sitz Klingenberg – Amtsgericht Aschaffenburg HRA 4685

Komplementärin:
WIKA International SE - Sitz Klingenberg - Amtsgericht Aschaffenburg HRB 10505
Vorstand: Alexander Wiegand
Vorsitzender des Aufsichtsrats: Dr. Max Egli

ES

14232232.02 11/2017 EN/DE/FR/ES

Información adicional de WIKA modelos 73, 74 (ATEX) 49

14232232.02 11/2017 EN/DE/FR/ES

14232232.02 11/2017 EN/DE/FR/ES

WIKA subsidiaries worldwide can be found online at www.wika.com.
WIKA-Niederlassungen weltweit finden Sie online unter www.wika.de.
La liste des filiales WIKA dans le monde se trouve sur www.wika.fr.
Sucursales WIKA en todo el mundo puede encontrar en www.wika.es.

WIKA Alexander Wiegand SE & Co. KG
Alexander-Wiegand-Strasse 30
63911 Klingenberg • Germany
Tel. +49 9372 132-0
Fax +49 9372 132-406
info@wika.de
www.wika.de

14232232.02 11/2017 EN/DE/FR/ES

Additional information
Zusatzinformation
Informations complémentaires
Información adicional

Additional information for pointers **For NS 63, 100 and 160 pressure gauges and dial thermometers**	EN
Zusatzinformation für Zeiger **Für Manometer und Zeigerthermometer NG 63, 100 und 160**	DE
Informations complémentaires pour les aiguilles **Pour manomètres et thermomètres à cadran diam. 63, 100 et 160**	FR
Información adicional para agujas **Para manómetros y termómetros de esfera DN 63, 100 y 160**	ES

WIKA
Part of your business

EN	Additional information for pointers For pressure gauges and dial thermometers	Page	3 - 8
DE	Zusatzinformation für Zeiger Für Manometer und Zeigerthermometer	Seite	9 - 14
FR	Informations complémentaires pour les aiguilles Pour Manomètres et thermomètres à cadran	Page	15 - 20
ES	Información adicional para agujas Para manómetros y termómetros de dial	Página	21 - 25

© 09/2019 WIKA Alexander Wiegand SE & Co. KG
All rights reserved. / Alle Rechte vorbehalten.
WIKA® is a registered trademark in various countries.
WIKA® ist eine geschützte Marke in verschiedenen Ländern.

Prior to starting any work, read the operating instructions of the instrument and this additional information!
Keep for later use!

Vor Beginn aller Arbeiten Betriebsanleitung des Gerätes und diese Zusatzinformation lesen!
Zum späteren Gebrauch aufbewahren!

Lire le mode d‘emploi de l'instrument et ces informations complémentaires avant de commencer toute opération !
A conserver pour une utilisation ultérieure !

¡Leer el manual de instrucciones del instrument y esta información adicional antes de comenzar cualquier trabajo!
¡Guardar el manual para una eventual consulta!

14206179.02 01/2021 EN/DE/FR/ES

1. Safety

Supplementary documentation:
This additional information for pointers applies in combination with the operating instructions for the corresponding instrument.

EN

Contents

1. Safety 3
1.1 Explanation of symbols 3
1.2 General safety instructions. 3
2. Fixed pre-set pointers 4
2.1 Adjustable pointer for the zero point setting 4
2.2 Red mark pointer on the dial 4
3. Adjustable pointers. 5
3.1 Red mark pointer on the window. 5
3.2 Mark pointer on bayonet ring 6
3.3 Drag pointer. 7

1. Safety

1.1 Explanation of symbols

CAUTION!
... indicates a potentially dangerous situation that can result in light injuries or damage to property or the environment, if not avoided.

WARNING!
... indicates a potentially dangerous situation that can result in burns, caused by hot surfaces or liquids, if not avoided.

1.2 General safety instructions

WARNING!
Risk of burns!
Before setting the pointer, let the instrument cool down sufficiently! Depending on the process and instrument, there is a risk of dangerously hot surfaces.

For the operation of the instruments, the safety information in the operating instructions for the corresponding instrument applies.

14206179.02 01/2021 EN/DE/FR/ES

2. Fixed pre-set pointers

2. Fixed pre-set pointers

EN

The setting of the pointer described in this chapter can only be carried out by the manufacturer, as well as on site by qualified skilled personnel with calibration instruments.
Unauthorised opening of the case to adjust the pointer will void the warranty!

2.1 Adjustable pointer for the zero point setting

The setting of the adjustable pointer is carried out with the adjustment of the instrument.

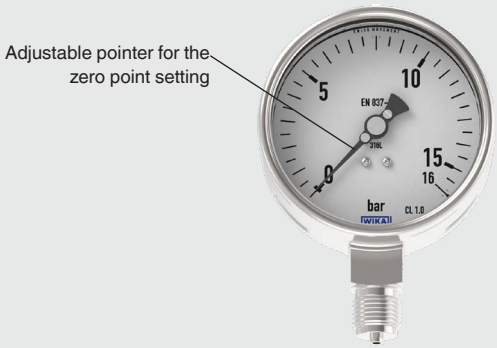

2.2 Red mark pointer on the dial

Mark pointers indicate the defined limit value of the relevant process.
The position of the red mark pointer on the dial is defined with the order. If there is no definition for the pointer position, then the red mark pointer will be set to the full scale value.

14206179.02 01/2021 EN/DE/FR/ES

4 Additional information for pointers of dial gauges

3. Adjustable pointers

The setting of the pointers described in this chapter can be made at the measuring point by authorised personnel. The setting of the pointers is to be made without opening the case, as described below, otherwise the warranty is voided.

EN

3.1 Red mark pointer on the window

Mark pointers indicate the defined limit value of the relevant process. The setting of this mark pointer is achieved using the adjustment lock in the window with the aid of the adjustment key.

CAUTION!
Risk of injury from incorrect operation!
Attempting to adjust the pointer without a suitable adjustment key or turning the adjustment lock directly can lead to the damage of the window with sharp-edged fractures. With filled instruments, the case filling can leak as a result of a broken window.

► Only carry out the pointer setting with the intended adjustment key.

The setting of the mark pointer is carried out as follows:

① Red mark pointer
② Adjustment lock
③ Adjustment lock cover
④ Adjustment key

1. Unscrew the cover of the adjustment lock anticlockwise.
2. Carefully insert the adjustment key into the adjustment lock delivered with the instrument. The square section of the adjustment key then fits perfectly into the adjustment lock.
3. Turn the adjustment key until the mark pointer indicates the desired scale value.
4. Withdraw the adjustment key and screw the cover of the adjustment lock tight again.

14206179.02 01/2021 EN/DE/FR/ES

3. Adjustable pointers

3.2 Mark pointer on bayonet ring

Mark pointers indicate the defined limit value of the relevant process. The setting of this mark pointer is made by moving it on the bayonet ring.

EN

CAUTION!
Damage to the instrument!
Errors with the handling of the clamping screw can damage the instrument:
- If the screwdriver slips off the screw head, the window could be damaged.
- If the clamping screw is fastened too tight, the bayonet ring can be deformed.

► Loosen/tighten the clamping screw with care.

The setting of the mark pointer is carried out as follows:

① Mark pointer on bayonet ring
② Clamping screw
③ Screwdriver for hexalobular socket T8

1. Carefully loosen the clamping screw on the mark pointer with a matching screwdriver.
2. Slide the mark pointer on the bayonet ring until the pointer indicates the desired scale value.
3. Carefully screw the clamping screw on the mark pointer back down, hand tight.

14206179.02 01/2021 EN/DE/FR/ES

3. Adjustable pointers

3.3 Drag pointer

The drag pointer shows the maximum value reached by the process. During the measurement, the drag pointer runs synchronously with the measured value pointer by means of a rotation pin until a maximum value is reached. If the measured value pointer falls below the maximum value, the drag pointer remains at the maximum value, as synchronisation by the rotation pin only functions in one direction. The resetting of the drag pointer is achieved using the adjustment lock in the window with the aid of the adjustment key.

EN

CAUTION!
Risk of injury from incorrect operation!
Attempting to adjust the pointer without a suitable adjustment key or turning the adjustment lock directly can lead to the damage of the window with sharp-edged fractures. With filled instruments, the case filling can leak as a result of a broken window.
► Only carry out the pointer setting with the intended adjustment key.

CAUTION!
Damage to the instrument!
Forcibly setting the drag pointer against a resistance (e.g. measured value pointer, pointer stop pin) can damage the drag pointer.

The setting of the drag pointer is carried out as follows:

① Drag pointer
② Measured value pointer
③ Adjustment lock
④ Adjustment lock cover
⑤ Adjustment key

1. Unscrew the cover of the adjustment lock anticlockwise.
2. Carefully insert the adjustment key into the adjustment lock delivered with the instrument. The square section of the adjustment key then fits perfectly into the adjustment lock.
3. Carefully turn the adjustment key in the direction of the measured value pointer until the drag pointer lies against the measured value pointer.
4. Withdraw the adjustment key and screw the cover of the adjustment lock tight again.

14206179.02 01/2021 EN/DE/FR/ES

EN

14206179.02 01/2021 EN/DE/FR/ES

8 Additional information for pointers of dial gauges

1. Sicherheit

Ergänzende Dokumentation:
Diese Zusatzinformation für Zeiger gilt im Zusammenhang mit der Betriebsanleitung des jeweiligen Gerätes.

Inhalt

DE

1. Sicherheit 9
1.1 Symbolerklärung 9
1.2 Generelle Sicherheitshinweise 9
2. Fest voreingestellte Zeiger 10
2.1 Verstellzeiger zur Nullpunkteinstellung 10
2.2 Roter Markenzeiger auf Zifferblatt 10
3. Einstellbare Zeiger 11
3.1 Roter Markenzeiger auf Sichtscheibe 11
3.2 Markenzeiger auf Bajonettring 12
3.3 Schleppzeiger 13

1. Sicherheit

1.1 Symbolerklärung

VORSICHT!
... weist auf eine möglicherweise gefährliche Situation hin, die zu geringfügigen oder leichten Verletzungen bzw. Sach- und Umweltschäden führen kann, wenn sie nicht gemieden wird.

WARNUNG!
... weist auf eine möglicherweise gefährliche Situation hin, die durch heiße Oberflächen oder Flüssigkeiten zu Verbrennungen führen kann, wenn sie nicht gemieden wird.

1.2 Generelle Sicherheitshinweise

WARNUNG!
Verbrennungsgefahr!
Vor dem Einstellen der Zeiger, das Gerät ausreichend abkühlen lassen! Je nach Prozess und Gerät besteht Gefahr durch heiße Oberflächen.

Für den Betrieb der Geräte gelten die Sicherheitsweise in der Betriebsanleitung des jeweiligen Gerätes.

14206179.02 01/2021 EN/DE/FR/ES

2. Fest voreingestellte Zeiger

Die Einstellung der in diesem Kapitel beschriebenen Zeiger kann nur durch den Hersteller sowie mit Kalibriergeräten vor Ort durch qualifiziertes Fachpersonal erfolgen.
Unbefugtes Öffnen des Gehäuses zum Einstellen der Zeiger hat das Erlöschen der Gewährleistung zur Folge!

DE

2.1 Verstellzeiger zur Nullpunkteinstellung

Die Einstellung des Verstellzeigers wird bei der Justage des Gerätes durchgeführt.

2.2 Roter Markenzeiger auf Zifferblatt

Markenzeiger zeigen den vom jeweiligen Prozess festgelegten Grenzwert an.
Die Position des roten Markenzeigers auf dem Zifferblatt wird bei der Bestellung festgelegt. Liegt keine Festlegung für die Zeigerposition vor, wird der rote Markenzeiger auf den Skalenendwert eingestellt.

14206179.02 01/2021 EN/DE/FR/ES

3. Einstellbare Zeiger

Die Einstellung der in diesem Kapitel beschriebenen Zeiger kann durch befugtes Personal an der Messstelle erfolgen. Die Einstellung der Zeiger ist ohne Gehäuseöffnung wie nachfolgend beschrieben vorzunehmen, da ansonsten die Gewährleistung erlischt.

DE

3.1 Roter Markenzeiger auf Sichtscheibe

Markenzeiger zeigen den vom jeweiligen Prozess festgelegten Grenzwert an. Das Einstellen dieses Markenzeigers erfolgt über das Verstellschloss in der Sichtscheibe mit Hilfe des Verstellschlüssels.

VORSICHT!
Verletzungsgefahr bei Fehlbedienung!
Der Versuch die Zeigereinstellung ohne passenden Verstellschlüssel oder durch direktes Drehen am Verstellschloss durchzuführen, kann zur Beschädigung der Sichtscheibe mit scharfkantigen Bruchstellen führen. Bei gefüllten Geräten kann durch eine beschädigte Sichtscheibe die Gehäusefüllung auslaufen.
► Zeigereinstellung nur mit dafür vorgesehenem Verstellschlüssel durchführen.

Zur Einstellung des Markenzeigers wie folgt vorgehen:

① Roter Markenzeiger
② Verstellschloss
③ Abdeckung Verstellschloss
④ Verstellschlüssel

1. Abdeckung des Verstellschlosses gegen den Uhrzeigersinn abschrauben.
2. Mitgelieferten Verstellschlüssel vorsichtig in das Verstellschloss stecken. Der Vierkant des Verstellschlüssels sitzt danach passgenau im Verstellschloss.
3. Den Verstellschlüssel drehen, bis der Markenzeiger den gewünschten Skalenwert zeigt.
4. Verstellschlüssel abziehen und die Abdeckung des Verstellschlosses wieder festschrauben.

14206179.02 01/2021 EN/DE/FR/ES

DE

3. Einstellbare Zeiger

3.2 Markenzeiger auf Bajonettring

Markenzeiger zeigen den vom jeweiligen Prozess festgelegten Grenzwert an. Das Einstellen dieses Markenzeigers erfolgt durch Verschieben auf dem Bajonettring.

VORSICHT!
Beschädigung des Gerätes!
Fehler bei der Handhabung der Klemmschraube können das Gerät beschädigen:
- Rutscht der Schraubendreher vom Schraubenkopf ab, kann die Sichtscheibe beschädigt werden.
- Wird die Klemmschraube zu fest angezogen, verformt sich der Bajonettring.

▶ Klemmschraube mit Sorgfalt lösen/festziehen.

Zur Einstellung des Markenzeigers wie folgt vorgehen:

① Markenzeiger auf Bajonettring
② Klemmschraube
③ Schraubendreher für Innensechsrund T8

1. Mit passendem Schraubendreher die Klemmschraube am Markenzeiger vorsichtig lösen.
2. Markenzeiger am Bayonettring verschieben, bis der Zeiger auf den gewünschten Skalenwert zeigt.
3. Vorsichtig die Klemmschraube am Markenzeiger wieder handfest anziehen.

14206179.02 01/2021 EN/DE/FR/ES

3. Einstellbare Zeiger

3.3 Schleppzeiger

Der Schleppzeiger zeigt den vom Prozess erreichten Maximalwert an. Bei der Messung läuft der Schleppzeiger durch einen Mitnehmerstift solange synchron mit dem Messwertzeiger, bis ein Maximalwert erreicht ist. Unterschreitet der Messwertzeiger den Maximalwert, bleibt der Schleppzeiger auf dem Maximalwert stehen, da die Synchronisierung durch den Mitnehmerstift nur in eine Richtung funktioniert. Das Zurückstellen des Schleppzeigers erfolgt über das Verstellschloss in der Sichtscheibe mit Hilfe des Verstellschlüssels.

DE

VORSICHT!
Verletzungsgefahr bei Fehlbedienung!
Der Versuch die Zeigereinstellung ohne passenden Verstellschlüssel oder durch direktes Drehen am Verstellschloss durchzuführen, kann zur Beschädigung der Sichtscheibe mit scharfkantigen Bruchstellen führen. Bei gefüllten Geräten kann durch eine beschädigte Sichtscheibe die Gehäusefüllung auslaufen.
► Zeigereinstellung nur mit dafür vorgesehenem Verstellschlüssel durchführen.

VORSICHT!
Beschädigung des Gerätes!
Gewaltsames Einstellen des Schleppzeigers gegen einen Widerstand (z. B. Messwertzeiger, Anschlagstift) kann zur Beschädigung des Schleppzeigers führen.

Zur Rückstellung des Schleppzeigers wie folgt vorgehen:

① Schleppzeiger
② Messwertzeiger
③ Verstellschloss
④ Abdeckung Verstellschloss
⑤ Verstellschlüssel

1. Abdeckung des Verstellschlosses gegen den Uhrzeigersinn abschrauben.
2. Mitgelieferten Verstellschlüssel vorsichtig in das Verstellschloss stecken. Der Vierkant des Verstellschlüssels sitzt danach passgenau im Verstellschloss.
3. Vorsichtig den Verstellschlüssel in Richtung des Messwertzeigers drehen, bis der Schleppzeiger am Messwertzeiger anliegt.
4. Verstellschlüssel abziehen und die Abdeckung des Verstellschlosses wieder festschrauben.

14206179.02 01/2021 EN/DE/FR/ES

DE

14206179.02 01/2021 EN/DE/FR/ES

1. Sécurité

Documentation supplémentaire :
Ces informations complémentaires pour les aiguilles s'appliquent en accord avec le mode d'emploi de l'instrument correspondant.

Sommaire

1. Sécurité 15
1.1 Explication des symboles 15
1.2 Consignes générales de sécurité 15
2. Aiguilles fixes préréglées 16
2.1 Aiguille réglable pour le réglage du point zéro 16
2.2 Aiguille repère rouge sur le cadran 16
3. Aiguilles réglables 17
3.1 Aiguille repère rouge sur le voyant 17
3.2 Aiguille repère sur la lunette baïonnette 18
3.3 Aiguille suiveuse 19

FR

1. Sécurité

1.1 Explication des symboles

ATTENTION !
… indique une situation potentiellement dangereuse et susceptible de provoquer de légères blessures ou des dommages pour le matériel et pour l'environnement si elle n'est pas évitée.

AVERTISSEMENT !
… indique une situation présentant des risques susceptibles de provoquer des brûlures dues à des surfaces ou liquides chauds si elle n'est pas évitée.

1.2 Consignes générales de sécurité

AVERTISSEMENT !
Danger de brûlure !
Avant de régler l'aiguille, laisser refroidir suffisamment l'instrument ! En fonction du process et de l'instrument, il y a un risque de surfaces brulantes.

Pour le fonctionnement des instruments, les informations concernant la sécurité contenues dans le mode d'emploi de l'instrument correspondant s'appliquent.

14206179.02 01/2021 EN/DE/FR/ES

2. Aiguilles fixes préréglées

Le réglage de l'aiguille décrit dans ce chapitre peut être effectué seulement par le fabricant, ainsi que sur le site par du personnel technique qualifié avec des instruments d'étalonnage. Toute ouverture non autorisée du boîtier pour régler l'aiguille invalide la garantie !

2.1 Aiguille réglable pour le réglage du point zéro

L'ajustement de l'aiguille réglable est effectué avec celui de l'instrument.

FR

2.2 Aiguille repère rouge sur le cadran

Les aiguilles repères indiquent la valeur limite définie du process en question.
La position de l'aiguille repère rouge sur le cadran est définie avec la commande. S'il n'y a aucune définition pour la position de l'aiguille, alors l'aiguille repère rouge sera réglée sur la valeur pleine échelle.

14206179.02 01/2021 EN/DE/FR/ES

3. Aiguilles réglables

Le réglage des aiguilles décrit dans ce chapitre peut être fait au point de mesure par du personnel autorisé. Le réglage des aiguilles doit être effectué sans ouvrir le boîtier, comme décrit ci-dessous, sinon la garantie sera invalidée.

3.1 Aiguille repère rouge sur le voyant

Les aiguilles repères indiquent la valeur limite définie du process en question. Le réglage de cette aiguille repère s'effectue au moyen du système de réglage situé dans le voyant, à l'aide de la clé de réglage.

FR

ATTENTION !
Risque de blessures en cas d'opération incorrecte !
Essayer de régler l'aiguille sans clé de réglage adéquate ou tourner directement la serrure de réglage peut conduire à des dommages sur le voyant avec des arêtes très coupantes. Avec les instruments remplis de liquide, le liquide de remplissage peut fuir si le voyant est cassé.

► N'effectuer le réglage de l'aiguille qu'avec la clé de réglage prévue à cet effet.

Le réglage de l'aiguille repère se fait comme suit :

① Repère rouge
② Orifice de réglage
③ Couvercle de la serrure de réglage
④ Clé de réglage

1. Dévisser le couvercle de la serrure de réglage dans le sens contraire à celui des aiguilles d'une montre.
2. Insérer prudemment la clé de réglage dans la serrure de réglage livrée avec l'instrument. Le carré de la clé de réglage rentre parfaitement dans la serrure de réglage.
3. Tourner la clé de réglage jusqu'à ce que l'aiguille repère indique la valeur d'échelle désirée.
4. Retirer la clé de réglage et revisser à fond le couvercle de la serrure de réglage.

14206179.02 01/2021 EN/DE/FR/ES

3. Aiguilles réglables

3.2 Aiguille repère sur la lunette baïonnette

Les aiguilles repères indiquent la valeur limite définie du process en question. Le réglage de cette aiguille repère se fait en la déplaçant sur la lunette baïonnette.

ATTENTION !
Dommages de l'instrument !
Des erreurs de manipulation de la vis de serrage peuvent endommager l'instrument :
- Si le tournevis dérape de la tête de vis, cela pourrait endommager le voyant.
- Si la vis de serrage est serrée trop fort, la lunette baïonnette peut être déformée.

▶ Desserrer ou serrer la vis de serrage avec soin.

FR

Le réglage de l'aiguille repère se fait comme suit :

① Aiguille repère sur la lunette baïonnette
② Vis de serrage
③ Tournevis pour creux hexalobé T8

1. Desserrer prudemment la vis de serrage sur l'aiguille repère avec un tournevis correspondant.
2. Faire glisser l'aiguille repère sur la lunette baïonnette jusqu'à ce que l'aiguille indique la valeur d'échelle désirée.
3. Revisser prudemment à la main la vis de serrage sur l'aiguille repère.

14206179.02 01/2021 EN/DE/FR/ES

3. Aiguilles réglables

3.3 Aiguille suiveuse

L'aiguille suiveuse indique la valeur maximum atteinte par le process. Lors de la mesure, l'aiguille suiveuse se déplace de manière synchrone avec l'aiguille de valeur mesurée au moyen d'une tige de rotation jusqu'à ce que la valeur maximum soit atteinte. Si l'aiguille de valeur mesurée descend en-dessous de la valeur maximum, l'aiguille suiveuse reste à la valeur maximum, car la synchronisation de la tige de rotation ne fonctionne que dans une seule direction. Le nouveau réglage de l'aiguille suiveuse s'effectue au moyen de la serrure de réglage situé dans le voyant, à l'aide de la clé de réglage.

ATTENTION !
Risque de blessures en cas d'opération incorrecte !
Essayer de régler l'aiguille sans clé de réglage adéquate ou tourner directement la serrure de réglage peut conduire à des dommages sur le voyant avec des arêtes très coupantes. Avec les instruments remplis de liquide, le liquide de remplissage peut fuir si le voyant est cassé.

► N'effectuer le réglage de l'aiguille qu'avec la clé de réglage prévue à cet effet.

FR

ATTENTION !
Dommages de l'instrument !
Essayer de régler de force l'aiguille suiveuse contre une résistance (par exemple l'aiguille de valeur mesurée, butée d'aiguille) peut endommager l'aiguille suiveuse.

Le réglage de l'aiguille suiveuse se fait comme suit :

① Aiguille suiveuse
② Aiguille de valeur mesurée
③ Orifice de réglage
④ Couvercle de la serrure de réglage
⑤ Clé de réglage

1. Dévisser le couvercle de la serrure de réglage dans le sens contraire à celui des aiguilles d'une montre.
2. Insérer prudemment la clé de réglage dans la serrure de réglage livrée avec l'instrument. Le carré de la clé de réglage rentre parfaitement dans la serrure de réglage.
3. Tourner prudemment la clé de réglage dans la direction de l'aiguille de valeur mesurée jusqu'à ce que l'aiguille suiveuse soit posée contre l'aiguille de valeur mesurée.
4. Retirer la clé de réglage et revisser à fond le couvercle de la serrure de réglage.

14206179.02 01/2021 EN/DE/FR/ES

FR

14206179.02 01/2021 EN/DE/FR/ES

20 Mode d'emploi pour manomètres avec contact électrique type 821, 851 ou 830 E

1. Seguridad

Documentación complementaria:
Esta información adicional para agujas se aplica junto con el manual de instrucciones del instrumento correspondiente.

Contenido

ES

1. Seguridad 21
1.1 Explicación de símbolos 21
1.2 Instrucciones generales de seguridad 21
2. Ajustada de forma permanente. 22
2.1 Aguja ajustable para el ajuste del punto cero 22
2.2 Aguja de marcaje roja en esfera 22
3. Agujas ajustables 23
3.1 Aguja de marcaje roja en mirilla 23
3.2 Aguja de marcaje en aro bayoneta 24
3.3 Aguja de arrastre 25

1. Seguridad

1.1 Explicación de símbolos

¡CUIDADO!
... indica una situación probablemente peligrosa que puede causar lesiones leves o medianas, o daños materiales y medioambientales, si no se la evita.

¡ADVERTENCIA!
... indica una situación probablemente peligrosa que puede causar quemaduras debido a superficies o líquidos calientes si no se evita.

1.2 Instrucciones generales de seguridad

¡ADVERTENCIA!
¡Riesgo de quemaduras!
¡Dejar enfriar el instrumento lo suficiente antes de ajustar las agujas! En función del proceso y del instrumento existe peligro debido a superficies calientes.

Para el funcionamiento de los instrumentos se aplican las instrucciones de seguridad en el manual de instrucciones del instrumento correspondiente.

14206179.02 01/2021 EN/DE/FR/ES

2. Agujas preajustadas fijamente

2. Ajustada de forma permanente

El ajuste de las agujas descritas en este capítulo se realiza por el fabricante o directamente in situ, con instrumentos de calibración manejados por personal técnico cualificado.
¡Una apertura de la caja por personas no autorizadas para ajustar las agujas anulará la garantía!

ES

2.1 Aguja ajustable para el ajuste del punto cero

El ajuste de la aguja ajustable se efectúa durante el ajuste del instrumento.

2.2 Aguja de marcaje roja en esfera

Las agujas de marcaje indican el valor límite definido en función del proceso correspondiente.
La posición de la aguja de marcaje roja en la esfera se define durante el pedido. Si no hay ninguna definición para la posición de la aguja, la aguja de marcaje roja se ajusta al valor final de escala.

14206179.02 01/2021 EN/DE/FR/ES

3. Agujas ajustables

El ajuste de las agujas descritas en este capítulo puede efectuarse en el punto de medición por personal autorizado. El ajuste de la aguja debe efectuarse sin apertura de la caja y como descrito a continuación dado que de lo contrario será inválida la garantía.

3.1 Aguja de marcaje roja en mirilla

Las agujas de marcaje indican el valor límite definido en función del proceso correspondiente. El ajuste de esta aguja de marcaje se hace a través del cierre de ajuste en la mirilla, utilizando la llave de ajuste.

ES

¡CUIDADO!
¡Riesgo de lesiones en caso de manejo incorrecto!
El intento de efectuar el ajuste de la aguja sin llave de ajuste adecuada o girando directamente en el cierre de ajuste puede provocar daños en la mirilla con puntos de ruptura afilados. En caso de instrumentos con líquido de llenado, este último puede salir debido a una mirilla dañada.
► Efectuar el ajuste únicamente con la llave de ajuste previsto para ello.

Para ajustar la aguja de marcaje, proceder del modo siguiente:

① Aguja de marcaje roja
② Cierre de ajuste
③ Cubierta cierre de ajuste
④ Llave de ajuste

1. Desatornillar la cubierta del cierre de ajuste en sentido antihorario.
2. Introducir la llave de ajuste suministrada con cuidado en el cierre de ajuste. Luego, el perfil cuadrado de la llave de ajuste encaja perfectamente en el cierre de ajuste.
3. Girar la llave de ajuste hasta que la aguja de marcaje indique el valor de escala deseado.
4. Retirar la llave de ajuste y volver a atornillar la cubierta del cierre de ajuste.

14206179.02 01/2021 EN/DE/FR/ES

3. Agujas ajustables

3.2 Aguja de marcaje en aro bayoneta

Las agujas de marcaje indican el valor límite definido en función del proceso correspondiente. El ajuste de la aguja de marcaje se efectúa mediante desplazamiento en el aro bayoneta.

ES

¡CUIDADO!
¡Daño al dispositivo!
Errores durante la manipulación del tornillo de sujeción pueden llevar a daños en el equipo:
- Si el destornillador resbala de la cabeza del tornillo puede dañarse la mirilla.
- Si se aprieta demasiado el tornillo de sujeción, el aro de bayoneta se deforma.

▶ Soltar/apretar el tornillo de sujeción con diligencia.

Para ajustar la aguja de marcaje, proceder del modo siguiente:

① Aguja de marcaje en aro bayoneta
② Tornillo de sujeción
③ Destornillador para hexalobular interno T8

1. Mediante un destornillador a juego, soltar con cuidado el tornillo de sujeción en la aguja de marcaje.
2. Desplazar la aguja de marcaje en el aro de bayoneta hasta que la aguja indique el valor de escala deseado.
3. Volver a apretar manualmente el tornillo de sujeción en la aguja de marcaje con cuidado.

14206179.02 01/2021 EN/DE/FR/ES

3. Agujas ajustables

3.3 Aguja de arrastre

La aguja de arrastre indica el valor máximo alcanzado del proceso. Durante la medición, la aguja de arrastre se desplaza de manera sincronizada con la aguja del valor de medición mediante un vástago arrastrador hasta que se alcance un valor máximo. Si la aguja del valor de medición se desplaza a un valor por debajo del valor máximo, la aguja de arrastre se queda en el valor máximo dado que la sincronización solamente funciona en una sola dirección. La aguja de arrastre se reajusta mediante el bloqueo de ajuste en la mirilla con la ayuda de la tecla de ajuste.

ES

¡CUIDADO!
¡Riesgo de lesiones en caso de manejo incorrecto!
El intento de efectuar el ajuste de la aguja sin llave de ajuste adecuada o girando directamente en el cierre de ajuste puede provocar daños en la mirilla con puntos de ruptura afilados. En caso de instrumentos con líquido de llenado, este último puede salir debido a una mirilla dañada.
► Efectuar el ajuste únicamente con la llave de ajuste previsto para ello.

¡CUIDADO!
¡Daño al dispositivo!
Ajustar la aguja de arrastre aplicando fuerza y actuando contra una resistencia (p. ej. aguja del valor de medición, tope) puede llevar a daños en la aguja de arrastre.

Proceda de la siguiente manera para restablecer la aguja de arrastre:

① Aguja de arrastre
② Aguja del valor de medición
③ Cierre de ajuste
④ Cubierta cierre de ajuste
⑤ Llave de ajuste

1. Desatornillar la cubierta del cierre de ajuste en sentido antihorario.
2. Introducir la llave de ajuste suministrada con cuidado en el cierre de ajuste. Luego, el perfil cuadrado de la llave de ajuste encaja perfectamente en el cierre de ajuste.
3. Girar la llave de ajuste con cuidado hacia la aguja del valor de medición hasta que la aguja de arrastre esté en la posición de la aguja del valor de medición.
4. Retirar la llave de ajuste y volver a atornillar la cubierta del cierre de ajuste.

14206179.02 01/2021 EN/DE/FR/ES

14206179.02 01/2021 EN/DE/FR/ES

26 Additional information for pointers of dial gauges

14206179.02 01/2021 EN/DE/FR/ES

Additional information for pointers of dial gauges 27

WIKA subsidiaries worldwide can be found online at www.wika.com.
WIKA-Niederlassungen weltweit finden Sie online unter www.wika.de.
La liste des filiales WIKA dans le monde se trouve sur www.wika.fr.
Sucursales WIKA en todo el mundo puede encontrar en www.wika.es.

WIKA Alexander Wiegand SE & Co. KG
Alexander-Wiegand-Straße 30
63911 Klingenberg • Germany
Tel. +49 9372 132-0
Fax +49 9372 132-406
info@wika.de
www.wika.de

14206179.02 01/2021 EN/DE/FR/ES

A.7.2 Description

Mechanical temperature measurement

Gas actuated thermometer Model 73, stainless steel version

WIKA data sheet TM 73.01

Applications

- For aggressive media in the chemical, petrochemical and process engineering industries
- Universally suitable for machine building, plant, vessel, apparatus construction and food industry
- Temperature measurement without any contact to the medium
- Mounting in instrument boards, control cabinets, control panels

Special features

- Instruments meet the highest standards of measurement technology
- Case and stem from stainless steel
- For external mounting on pipes and tanks
- Various connection and case mounting designs
- Versions also available with adjustable stem and dial, with capillary, with contact bulb or edgewise panel design (square)

Gas actuated thermometer
Fig. left: lower mount (LM), model R73.100
Fig. centre: with capillary and surface mounting bracket, model F73.100
Fig. right: adjustable stem and dial version, model S73.100

Description

This series of thermometers is universally suitable for machine building, plant and apparatus construction. Gas actuated thermometers with capillary are used in locations which are not easily accessible and where long distances have to be bridged.

The stem, the process connection and the case of the instrument [1] are made from stainless steel. To allow fitting to the process, different installation lengths and process connections are available. The thermometers have a high ingress protection of IP 65 and can be used in outdoor applications even at negative temperatures. With liquid damping operation under high vibration conditions is possible. Due to the wide variety of possible designs, the model 73 gas actuated thermometers can be perfectly adapted to any process connection or location. The adjustable stem and dial version can be adjusted to any angle to allow easy reading. With the contact bulb version, temperature measurements are possible without any contact with the medium, even when the pipe diameter is extremely small. The contact bulb is intended for external mounting on pipes and tanks. When mounting this thermometer version, it must be ensured that the contact bulb is in contact with the measuring point over its complete length.

1) Not for model Q73.144, edgewise panel case galvanised steel

WIKA data sheet TM 73.01 · 06/2011 Page 1 of 10

WIKA Part of your business

Standard version

Measuring principle
Gas-pressure inert gas filling, physiologically safe

Nominal size in mm
100, 160, 144 x 144

Connection design
S Standard (male thread connection) [1)]
1 Plain stem (without thread)
2 Male nut
3 Union nut (female)
4 Compression fitting (sliding on stem)
5 Union nut with fitting
6 Compression fitting (sliding on capillary and/or spiral protection hose see page 9)

1) Not for version with capillary and edgewise panel design

Models

Model	NS	Version
A73.100	100	Back mount (axial)
A73.160	160	
R73.100	100	Lower mount (radial)
R73.160	160	
S73.100	100	Back mount, adjustable stem and dial
S73.160	160	
F73.100	100	Version with capillary
F73.160	160	
Q 73,144	144 x 144	Edgewise panel design

Accuracy class
Class 1 per DIN EN 13190

Working range
Normal (1 year): Measuring range (DIN EN 13190)
Short time (24 h max.): Scale range (DIN EN 13190)

Rated operating ranges and conditions
DIN EN 13190

Case, bezel ring, stem, process connection
Stainless steel

Adjustable stem and dial version
Stainless steel,
swivelling 90° and
rotatable 360°

Edgewise panel case and panel frame
Steel, galvanised

Contact bulb
120 x 22 x 12 mm, stainless steel 1.4571

Capillary
Ø 2 mm, stainless steel 1.4571, bending radius no less than 6 mm
Length to user specifications

Dial
Aluminium white, black lettering

Window
Laminated safety glass
(at edgewise panel design: shatterproof plastic)

Pointer
Aluminium, black, micro adjustment

Temperature limits for storage and transport
-50 … +70 °C without liquid damping
-20 … +60 °C (DIN EN 13190) with liquid damping

Permissible ambient temperature at case
0 … +40 °C max. (others on request)

Permissible pressure rating of stem
max. 25 bar, static

Ingress protection
IP 65 per EN 60529
Exception with model Q73.144: IP 65 at the front
IP 40 at the back

Mounting types for F73.xxx
- Surface mounting flange, stainless steel
- Surface mounting bracket, die cast aluminium
- Panel mounting flange, stainless steel
- Triangular bezel with clamp, polished stainless steel

Options

- Scale range °F, °C/°F (dual scale)
- Case with liquid damping
- Case with food-compatible liquid damping
- Armoured or coated capillary: armoured capillary Ø 7 mm, flexible or capillary with PVC coating
- Stem diameter 6, 10, 12 mm (others on request)
- Ingress protection IP 66
- Thermometer with switch contacts (data sheet TV 27.01)
- Special measuring ranges or dial printing to customer specifications (on request)
- Version per ATEX Ex II 2 GD c TX

Scale ranges, measuring ranges [1], error limits (DIN EN 13190)
Scale graduation per WIKA standard

Scale range in °C	Measuring range in °C	Scale spacing in °C	Error limit ± °C
-80 ... +60	-60 ... +40	2	2
-60 ... +40	-50 ... +30	1	1
-40 ... +60	-30 ... +50	1	1
-30 ... +50	-20 ... +40	1	1
-20 ... +60	-10 ... +50	1	1
-20 ... +80	-10 ... +70	1	1
0 ... +60	+10 ... +50	1	1
0 ... +80	+10 ... +70	1	1
0 ... +100	+10 ... +90	1	1
0 ... +120	+10 ... +110	2	2
0 ... +160	+20 ... +140	2	2
0 ... +200	+20 ... +180	2	2
0 ... +250	+30 ... +220	5	2.5
0 ... +300	+30 ... +270	5	5
0 ... +400	+50 ... +350	5	5
0 ... +500	+50 ... +450	5	5
0 ... +600	+100 ... +500	10	10
0 ... +700	+100 ... +600	10	10

1) The measuring range is indicated on the dial by two triangular marks.
Only within this range is the stated error limit valid per DIN EN 13190.

Connection design

Design standard (male thread connection) [1]
Standard stem lengths: l_1 = 63, 100, 160, 200, 250 mm

Nominal size NS	Process connection G	i	Dimensions in mm SW	d_4	Ø d
100, 160	G ½ B	14	27	26	8
	G ¾ B	16	32	32	8
	½ NPT	19	22	-	8
	¾ NPT	20	30	-	8

1) Not for version with capillary (F73.xxx) and edgewise panel design (Q73.144)

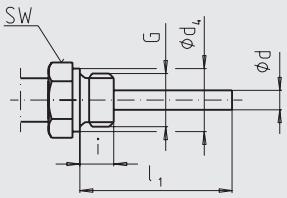

Legend:
G Male thread
i Thread length
Ø d_4 Diameter of the sealing collar
SW Flats
Ø d Stem diameter

Design 1, plain stem (without thread)
Standard stem lengths: l = 100, 140, 200, 240, 290 mm
Basis for design 4, compression fitting

Nominal size NS	Dimensions in mm d_1 [2]	Ød	a for axial	a for adjustable stem and dial
100, 160, 144 x144	18	8	15	25

2) Not applicable to version with capillary

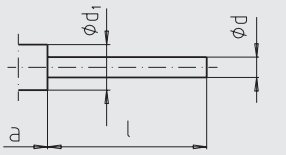

Legend:
Ø d_1 Plain diameter
Ø d Stem diameter

Design 2, male nut
Standard stem lengths: l_1 = 80, 140, 180, 230 mm

Nominal size NS	Process connection G	i	Dimensions in mm SW	Ød
100, 160, 144 x 144	G ½ B	20	27	8
	M20 x 1.5	15	22	8

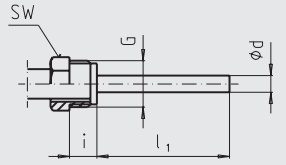

Legend:
G Male thread
i Thread length incl. collar
SW Flats
Ø d Stem diameter

Design 3, union nut
Standard stem lengths: l_1 = 89, 126, 186, 226, 276 mm

Nominal size NS	Process connection G_1	i	Dimensions in mm SW	Ød
100, 160, 144 x 144	G ½	8.5	27	8
	G ¾	10.5	32	8
	M24 x 1.5	13.5	32	8

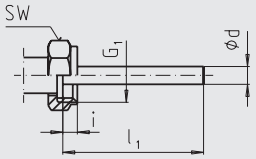

3073050X

Legend:
G_1 Female thread
i Thread length
SW Flats
Ø d Stem diameter

Design 4, compression fitting (sliding on stem)
Stem length: l_1 = variable
Length L = l_1 + 40 mm

Nominal size NS	Process connection G	i	Dimensions in mm SW	d_4	Ød
100, 160, 144 x 144	G ½ B	14	27	26	8
	G ¾ B	16	32	32	8
	M18 x 1.5	12	24	23	8
	½ NPT	19	22	-	8
	¾ NPT	20	30	-	8

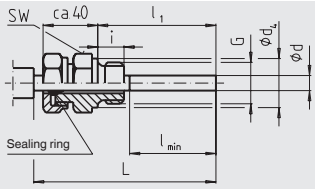

3073050Y

Legend:
G Male thread
i Thread length
Ø d_4 Diameter of the sealing collar
SW Flats
Ø d Stem diameter

Design 5, union nut with fitting
Standard stem lengths: l_1 = 63, 100, 160, 200, 250 mm

Nominal size NS	Process connection G	i	Dimensions in mm SW	d_4	Ø d
100, 160, 144 x 144	G ½ B	14	27	26	8
	G ¾ B	16	32	32	8
	M18 x 1.5	12	24	23	8
	½ NPT	19	22	-	8
	¾ NPT	20	30	-	8

Option: connection with union nut M24 x 1.5 with fitting M18 x 1.5

Nominal size NS	Process connection G	i	Dimensions in mm SW	d_4	Ø d
100, 160	M18 x 1.5	12	32	23	8

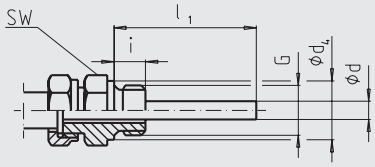

3073050Z

Legend:
G Male thread
i Thread length
Ø d_4 Diameter of the sealing collar
SW Flats
Ø d Stem diameter

Design 6.1, compression fitting sliding on capillary (compression fitting is leak-proof)
Standard stem length: l_1 = 100 mm (others on request)

Nominal size NS	Process connection G	i	Dimensions in mm SW	d_4	Ø d
100, 160, 144 x 144	G ½ B	14	27	26	8
	G ¾ B	16	32	32	8
	½ NPT	19	22	-	8
	¾ NPT	20	30	-	8

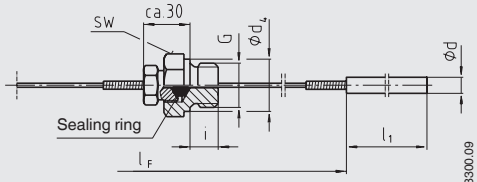

3073300.09

Legend:
G Male thread
i Thread length
l_F Capillary length
Ø d_4 Diameter of the sealing collar
SW Flats
Ø d Stem diameter

Design 6.2, compression fitting sliding on capillary with spiral protection hose (compression fitting is leak-proof)
Standard stem length: l_1 = 100 mm (others on request)

Nominal size NS	Process connection G	Dimensions in mm i	SW	d_4	Ø d
100, 160, 144 x 144	G ½ B	14	27	26	8
	G ¾ B	16	32	32	8
	½ NPT	19	22	-	8
	¾ NPT	20	30	-	8

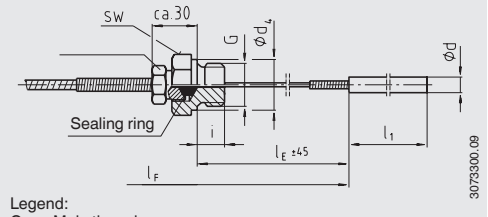

Legend:
G Male thread
i Thread length
l_F Capillary length
Ø d_4 Diameter of the sealing collar
SW Flats
Ø d Stem diameter
L_E at least 80 mm

Design 6.3, compression fitting sliding on spiral protection hose (compression fitting is not leak-proof)
Standard stem length: l_1 = 100 mm (others on request)

Nominal size NS	Process connection G	Dimensions in mm i	SW	d_4	Ø d
100, 160, 144 x 144	G ½ B	14	27	26	8
	G ¾ B	16	32	32	8
	½ NPT	19	22	-	8
	¾ NPT	20	30	-	8

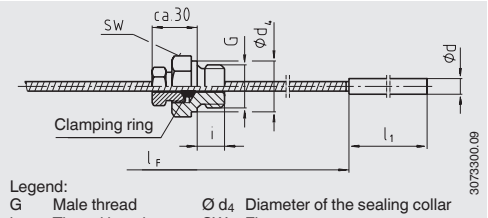

Legend:
G Male thread
i Thread length
l_F Capillary length
Ø d_4 Diameter of the sealing collar
SW Flats
Ø d Stem diameter

Dimensions in mm

Model A73, back mount

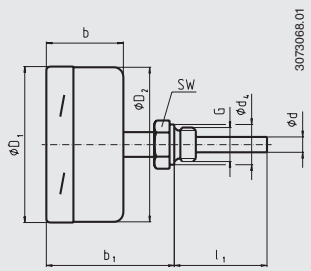

Model R73, lower mount

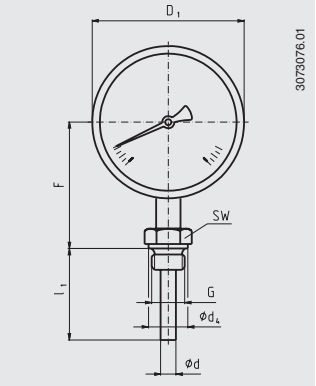

Model S73, back mount, adjustable stem and dial

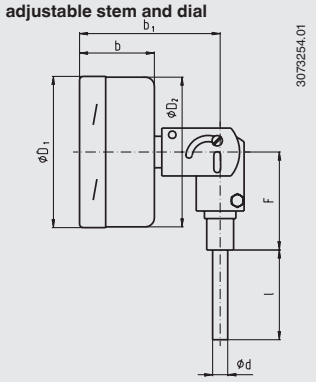

Table of dimensions for models A73 and R73

Nominal size NS	Dimensions in mm b	b_1 1)	d	d_4	D_1	D_2	F 1)	G	SW	Weight in kg
100	50	83	8 2)	26	101	99	83	G ½ B	27	1.1
160	50	83	8 2)	26	161	159	113	G ½ B	27	1.4

1) With scale ranges ≥ 0 ... 500 °C the dimensions increase by 40 mm
2) Option: Stem diameter 6, 10, 12 mm

Table of dimensions for model S73

Nominal size NS	Dimensions in mm b	b_1	d	D_1	D_2	F	Weight in kg
100	50	93	8 2)	101	99	68	1.3
160	50	93	8 2)	161	159	68	1.6

2) Option: Stem diameter 6, 10, 12 mm

Model F73, with capillary and surface mounting flange

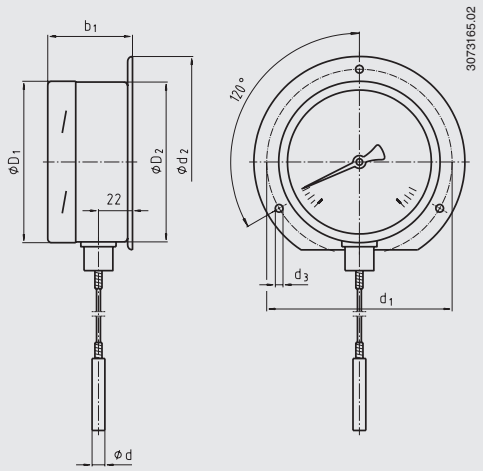

Model F73, with capillary and surface mounting bracket

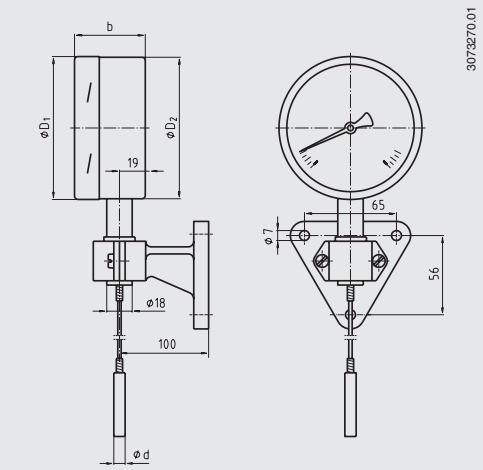

Model F73, with capillary and panel mounting flange

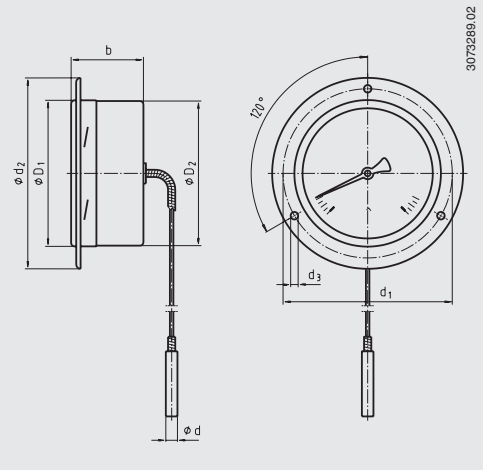

Model F73, with capillary and triangular bezel with clamp

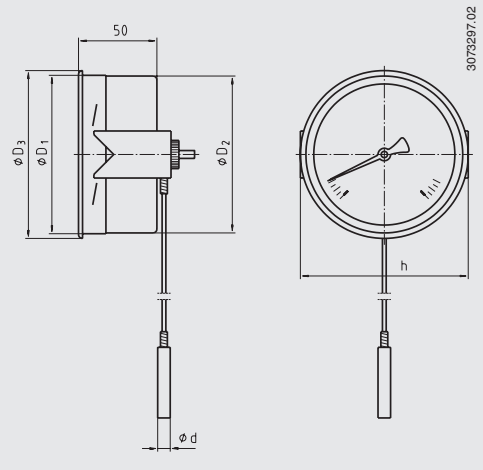

Table of dimensions for model F73 (with capillary)

Nominal size NS	Dimensions in mm b	b_1	d	d_1	d_2	d_3	D_1	D_2	D_3	h	Weight in kg
100	50	53	8 [1)]	116	132	4.8	101	99	107	107	1.4
160	50	53	8 [1)]	178	196	4.8	161	159	166	172	1.8

1) Option: Stem diameter 6, 10, 12 mm

Model A73, with contact bulb
Back mount (BM)

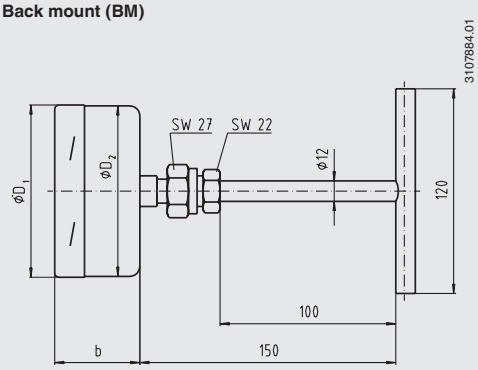

Model R73, with contact bulb
Lower mount (LM)

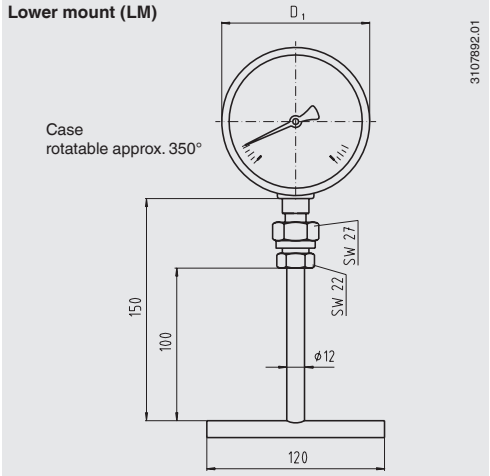

Model S73, with contact bulb
Back mount, adjustable stem and dial

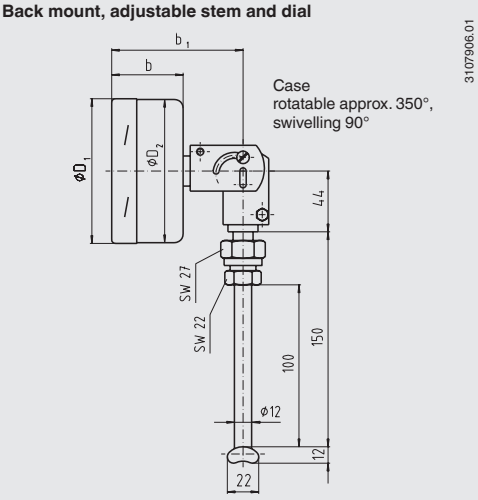

Table of dimensions for models A73, R73 and S73 (with contact bulb)

Model	Nominal size	Dimensions in mm				Weight in kg
	NS	b	b_1	D_1	D_2	
A73.100	100	50	-	101	99	0.8
A73.160	160	50	-	161	159	0.9
R73.100	100	50	-	101	99	0.8
R73.160	160	50	-	161	159	0.9
S73.100	100	50	93	101	99	0.9
S73.160	160	50	93	161	159	1.0

Model F73, with contact bulb
Capillary and surface mounting flange

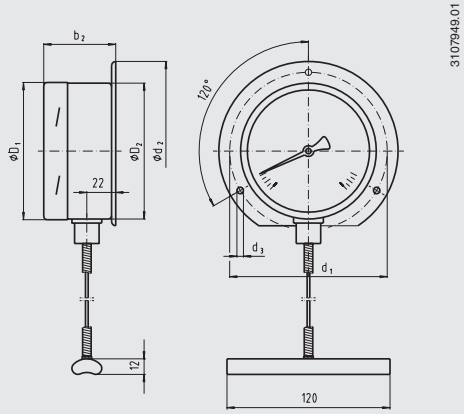

Model F73, with contact bulb
Capillary and surface mounting bracket

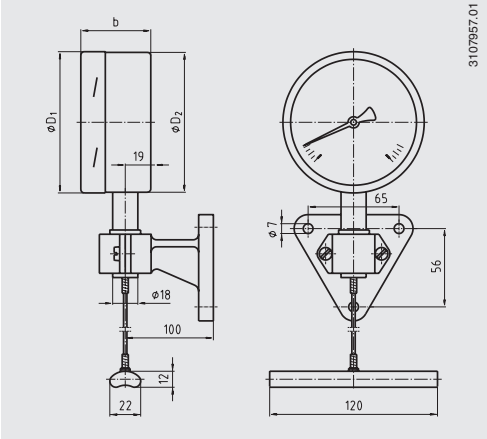

Model F73, with contact bulb
Capillary and panel mounting flange

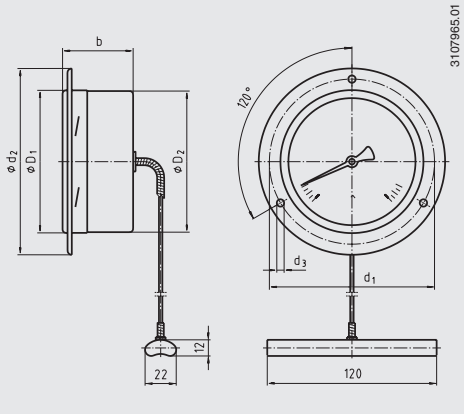

Model F73, with contact bulb
Capillary and triangular bezel with clamp

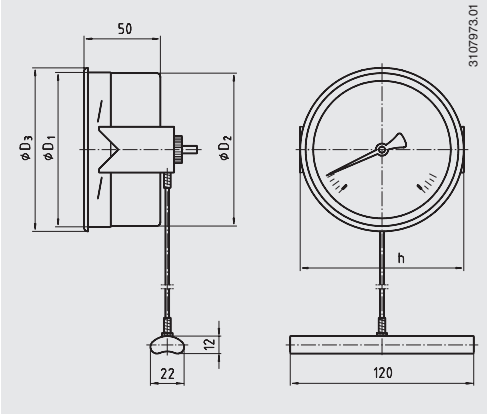

Table of dimensions for model F73 (with contact bulb and capillary)

Nominal size	Dimensions in mm									Weight in kg
NS	b	b_1	d_1	d_2	d_3	D_1	D_2	D_3	h	
100	50	53	116	132	4.8	101	99	107	107	1.4
160	50	53	178	196	5.8	161	159	166	172	1.8

Model Q73.144, edgewise panel design

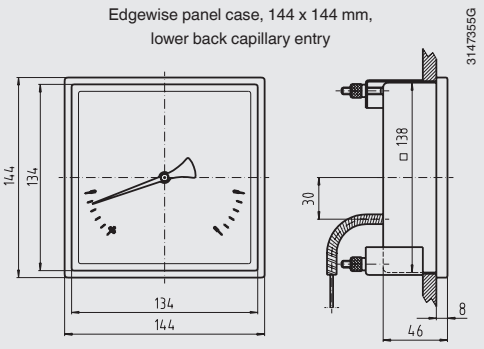

Panel cutout in mm

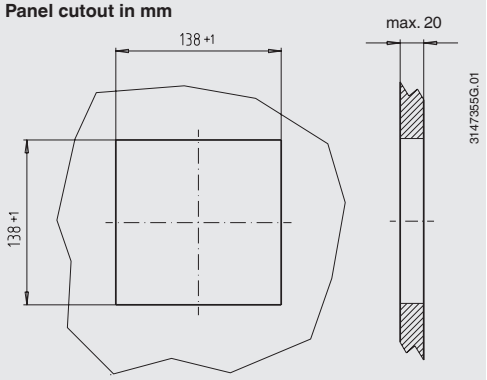

Mounting instructions for contact bulb

General

The contact bulb has been designed for mounting on pipes or tanks. When mounting this thermometer version, it must be ensured that the contact bulb is in contact with the measuring point over its complete length. The basic requirements to ensure a perfect measurement result is to retain good thermal contact between the skin mounted contact bulb and the outside wall of the pipe or tank with minimal heat loss to ambient from the skin mounted contact bulb and measuring point.

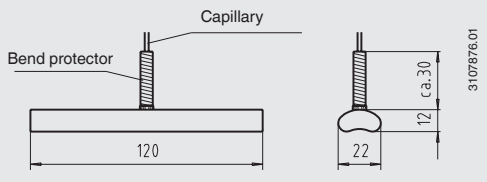

■ **Mounting on pipes**

The geometry of the contact bulb has been designed for pipes with external diameters between 20 and 160 mm. The skin mounted contact bulb should have direct metallic contact with the measuring point and have firm contact with the surface of the pipe. Where temperatures under 200 °C are to be expected, a heat conducting paste can be used to optimise the heat transmission between skin mounted contact bulb and pipe. Lagging must be applied where the skin mounted contact bulb has been mounted, in order to avoid error due to heat loss. This lagging must have sufficient temperature resistance and is not provided with the instrument.

Tube clip mounting

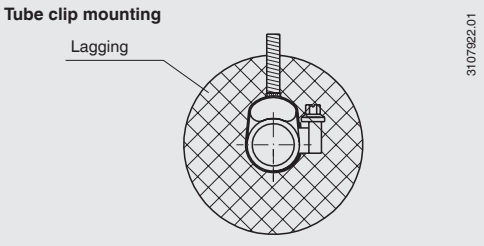

■ **Mounting on tanks**

The geometry of the contact bulb has been designed for tanks with an external radius up to 80 mm. If the mounting point of the skin mounting contact bulb on the tank has an external radius greater than 80 mm, we recommend the use of an intermediate piece designed for the respective tank diameter, made of a material with good thermal conductivity. The contact bulb should be fastened to the tank by means of an angle bracket with clamping screws, or any similar method. The skin mounted contact bulb should have direct metallic contact with the measuring point and have firm contact with the surface of the tank.

A heat conductive paste can be used to optimise the heat transmission between skin mounted contact bulb and tank if temperatures under 200 °C are to be expected. Lagging must be applied where the skin mounted contact bulb has been mounted, in order to avoid error due to heat loss. This lagging must have sufficient temperature resistance and is not provided with the instrument.

Angle bracket mounting

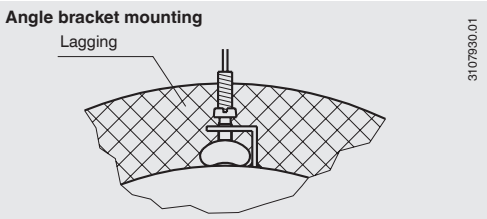

Ordering information

Model / Nominal size / Scale range / Design of connection / Process connection / Length l, l_1 / Capillary length l_F / Options

© 2006 WIKA Alexander Wiegand SE & Co. KG, all rights reserved.
The specifications given in this document represent the state of engineering at the time of publishing.
We reserve the right to make modifications to the specifications and materials.

06/2011 GB

WIKA Alexander Wiegand SE & Co. KG
Alexander-Wiegand-Straße 30
63911 Klingenberg/Germany
Tel. (+49) 9372/132-0
Fax (+49) 9372/132-406
E-mail info@wika.de
www.wika.de

A.8 Bimetal thermometer

Name	Data
Designation	*Thermometer*
Type	R5502
Number	
Type of manual	*Technical documentation*
Manufacturer	WIKA Alexander Wiegand SE & Co. KG

Place of installation	TAG No. AERZEN	Link
Blower oil system	3.5.4.X31	
Gearbox oil system 50 L	3.5.4.X51	linktarget doesn't exist but @y.link.required='true'
Gearbox oil system 100L	3.5.4.X51	linktarget doesn't exist but @y.link.required='true'

A.8.1 Operating instructions

Operating instructions
Betriebsanleitung
Mode d'emploi
Manual de instrucciones

Bimetal thermometer, model 55	**EN**
Bimetallthermometer, Typ 55	**DE**
Thermomètre bimétallique, type 55	**FR**
Termómetro bimetálico, modelo 55	**ES**

Model R5502

Model S5550

WIKA
Part of your business

EN	Operating instructions model 55	Page	3 - 22
DE	Betriebsanleitung Typ 55	Seite	23 - 42
FR	Mode d'emploi type 55	Page	43 - 62
ES	Manual de instrucciones modelo 55	Página	63 - 82

© 09/2010 WIKA Alexander Wiegand SE & Co. KG
All rights reserved. / Alle Rechte vorbehalten.
WIKA® is a registered trademark in various countries.
WIKA® ist eine geschützte Marke in verschiedenen Ländern.

Prior to starting any work, read the operating instructions!
Keep for later use!

Vor Beginn aller Arbeiten Betriebsanleitung lesen!
Zum späteren Gebrauch aufbewahren!

Lire le mode d'emploi avant de commencer toute opération !
A conserver pour une utilisation ultérieure !

¡Leer el manual de instrucciones antes de comenzar cualquier trabajo!
¡Guardar el manual para una eventual consulta!

12968065.06 06/2019 EN/DE/FR/ES

Contents

EN

1. General information	4
2. Design and function	5
3. Safety	6
4. Transport, packaging and storage	11
5. Commissioning, operation	13
6. Faults	16
7. Maintenance and cleaning	18
8. Dismounting, return and disposal	20
9. Specifications	22

12968065.06 06/2019 EN/DE/FR/ES

EN

1. General information

1. General information

- The bimetal thermometer described in the operating instructions has been designed and manufactured using state-of-the-art technology. All components are subject to stringent quality and environmental criteria during production. Our management systems are certified to ISO 9001 and ISO 14001.
- These operating instructions contain important information on handling the bimetal thermometer. Working safely requires that all safety instructions and work instructions are observed.
- Observe the local accident prevention regulations and general safety regulations, in effect for the bimetal thermometer‘s range of use.
- The operating instructions are part of the instrument and must be kept in the immediate vicinity of the bimetal thermometer and readily accessible to skilled personnel at any time.
- Skilled personnel must have carefully read and understood the operating instructions, prior to beginning any work.
- The general terms and conditions, contained in the sales documentation, shall apply.
- Subject to technical modifications.
- Further information:
  - Internet address: www.wika.de / www.wika.com
  - Relevant data sheet: TM 55.01
  - Application consultant: Tel.: +49 9372 132-0
    Fax: +49 9372 132-406
    info@wika.de

12968065.06 06/2019 EN/DE/FR/ES

2. Design and function

2. Design and function

2.1 Overview

EN

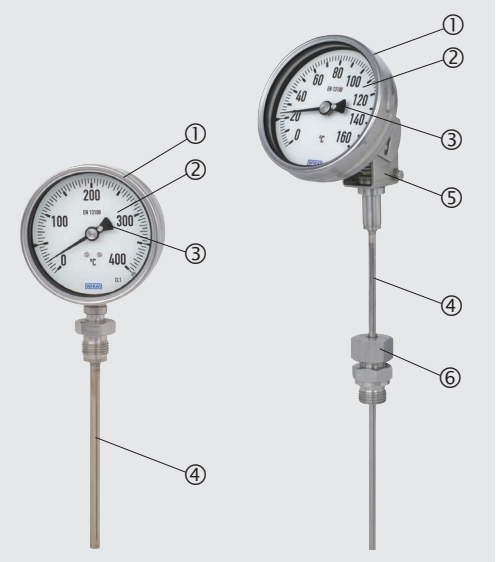

① Case
② Dial
③ Pointer
④ Stem
⑤ Adjustable stem and dial version
⑥ Process connection

12968065.06 06/2019 EN/DE/FR/ES

EN

2. Design and function / 3. Safety

2.2 Description

The bimetal thermometers of this series are intended for installation in pipelines, vessels, plant and machinery.

Sheath and case are made of stainless steel.
To allow fitting to the process, different installation lengths and process connections are available.

Through the high protection class of the thermometer (IP65) and its liquid damping, operation under vibration conditions is possible.

2.3 Scope of delivery

Cross-check scope of delivery with delivery note.

3. Safety

3.1 Explanation of symbols

WARNING!
... indicates a potentially dangerous situation that can result in serious injury or death, if not avoided.

CAUTION!
... indicates a potentially dangerous situation that can result in light injuries or damage to property or the environment, if not avoided.

WARNING!
... indicates a potentially dangerous situation that can result in burns, caused by hot surfaces or liquids, if not avoided.

Information
... points out useful tips, recommendations and information for efficient and trouble-free operation.

12968065.06 06/2019 EN/DE/FR/ES

3. Safety

EN

3.2 Intended use

These bimetal thermometers are mainly used in the process industry for monitoring the process temperature.

The bimetal thermometer has been designed and built solely for the intended use described here, and may only be used accordingly.

The technical specifications contained in these operating instructions must be observed. Improper handling or operation of the bimetal thermometer outside of its technical specifications requires the instrument to be taken out of service immediately and inspected by an authorised WIKA service engineer.

The manufacturer shall not be liable for claims of any type based on operation contrary to the intended use.

3.3 Improper use

WARNING!
Injuries through improper use
Improper use of the instrument can lead to hazardous situations and injuries.

- ▶ Refrain from unauthorised modifications to the instrument.
- ▶ Do not use the instrument within hazardous areas.
- ▶ Do not use the instrument with abrasive or viscous media.

Any use beyond or different to the intended use is considered as improper use.

Do not use this instrument in safety or emergency stop devices.

12968065.06 06/2019 EN/DE/FR/ES

EN

3. Safety

3.4 Responsibility of the operator

The instrument is used in the industrial sector. The operator is therefore responsible for legal obligations regarding safety at work.

The safety instructions within these operating instructions, as well as the safety, accident prevention and environmental protection regulations for the application area must be maintained.

The operator is obliged to maintain the product label in a legible condition.

To ensure safe working on the instrument, the operating company must ensure

- that suitable first-aid equipment is available and aid is provided whenever required.
- that the operating personnel are regularly instructed in all topics regarding work safety, first aid and environmental protection and know the operating instructions and in particular, the safety instructions contained therein.
- that the instrument is suitable for the particular application in accordance with its intended use.

3.5 Personnel qualification

WARNING!
Risk of injury should qualification be insufficient
Improper handling can result in considerable injury and damage to equipment.

- ▶ The activities described in these operating instructions may only be carried out by skilled personnel who have the qualifications described below.
- ▶ Keep unqualified personnel away from hazardous areas.

12968065.06 06/2019 EN/DE/FR/ES

3. Safety

EN

Skilled personnel
Skilled personnel are understood to be personnel who, based on their technical training, knowledge of measurement and control technology and on their experience and knowledge of country-specific regulations, current standards and directives, are capable of carrying out the work described and independently recognising potential hazards.

Special operating conditions require further appropriate knowledge, e.g. of aggressive media.

3.6 Personal protective equipment

The personal protective equipment is designed to protect the skilled personnel from hazards that could impair their safety or health during work. When carrying out the various tasks on and with the instrument, the skilled personnel must wear personal protective equipment.

Follow the instructions displayed in the work area regarding personal protective equipment!

The requisite personal protective equipment must be provided by the operating company.

Wear safety goggles!
Protect eyes from flying particles and liquid splashes.

Wear protective gloves!
Protect hands from friction, abrasion, cuts or deep injuries and also from contact with hot surfaces and aggressive media.

12968065.06 06/2019 EN/DE/FR/ES

3. Safety

3.7 Labelling, safety marks

EN

Product label (example)

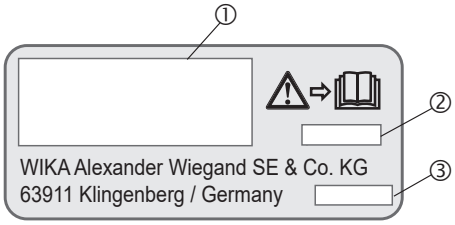

① Model
② Year of manufacture
③ Serial number

Before mounting and commissioning the instrument, ensure you read the operating instructions!

Do not fill the instruments with filling liquid subsequently.

12968065.06 06/2019 EN/DE/FR/ES

4. Transport, packaging and storage

4. Transport, packaging and storage

EN

4.1 Transport

Check instrument for any damage that may have been caused by transport. Obvious damage must be reported immediately.

CAUTION!
Damage through improper transport
With improper transport, a high level of damage to property can occur.

- ▶ When unloading packed goods upon delivery as well as during internal transport, proceed carefully and observe the symbols on the packaging.
- ▶ With internal transport, observe the instructions in chapter 4.2 “Packaging and storage”.

If the instrument is transported from a cold into a warm environment, the formation of condensation may result in instrument malfunction. Before putting it back into operation, wait for the instrument temperature and the room temperature to equalise.

4.2 Packaging and storage

Do not remove packaging until just before mounting.
Keep the packaging as it will provide optimum protection during transport (e.g. change in installation site, sending for repair).

Permissible conditions at the place of storage:
Storage temperature: -20 ... +60 °C

Avoid exposure to the following factors:

- Direct sunlight or proximity to hot objects
- Mechanical vibration, mechanical shock (putting it down hard)
- Soot, vapour, dust and corrosive gases
- Potentially explosive environments, flammable atmospheres

12968065.06 06/2019 EN/DE/FR/ES

EN

4. Transport, packaging and storage

Store the instrument in its original packaging in a location that fulfils the conditions listed above. If the original packaging is not available, pack and store the thermometer as described below:

1. Wrap the thermometer in an antistatic plastic film.
2. Place the thermometer, along with shock-absorbent material, in the packaging.
3. If stored for a prolonged period of time (more than 30 days), place a bag, containing a desiccant, inside the packaging.

WARNING!
Before storing the instrument (following operation), remove any residual media. This is of particular importance if the medium is hazardous to health, e.g. caustic, toxic, carcinogenic, radioactive, etc.

The use of liquid damping is always recommended for temperatures near the dew point (±1 °C around 0 °C).

12968065.06 06/2019 EN/DE/FR/ES

5. Commissioning, operation

5. Commissioning, operation

EN

WARNING!
Physical injuries and damage to property and the environment caused by hazardous media
Upon contact with hazardous media (e.g. oxygen, acetylene, flammable or toxic substances), harmful media (e.g. corrosive, toxic, carcinogenic, radioactive), and also with refrigeration plants and compressors, there is a danger of physical injuries and damage to property and the environment.
Should a failure occur, aggressive media with extremely high temperature and under high pressure or vacuum may be present at the instrument.

- ► For these media, in addition to all standard regulations, the appropriate existing codes or regulations must also be followed.

WARNING!
Injuries through hot surfaces or liquids
The sheath also contains a filling liquid; at a temperature > 250 °C, this liquid may become cloudy or change colour or, in some cases, may ignite.

- ► For filled instruments, make sure that the medium temperature is lower than 250 °C.

When screwing the gauges in, the force required for this must not be applied through the case or terminal box, rather only through the spanner flats provided for this purpose (using a suitable tool).

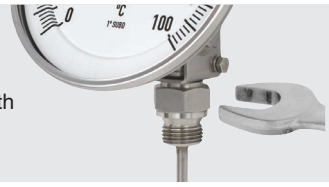

Installation with spanner

12968065.06 06/2019 EN/DE/FR/ES

EN

5. Commissioning, operation

When mounting a bimetal thermometer that can be rotated and swivelled, the specific instructions must be followed. In order to set the indicator to the desired position, the following steps must be taken:

1. The lock nut or union nut must be loosened at the process connection.
2. The hexagon bolts and slotted screws at the swivel joint must be loosened.

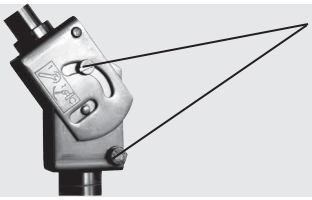

loosening

Make sure to loosen the screws on the opposite side as well!

3. Position the indicator as required, tighten the hexagon bolts and slotted screws, and finally tighten the lock nut or union nut firmly.

12968065.06 06/2019 EN/DE/FR/ES

5. Commissioning, operation

5.1 Use of thermowells

EN

CAUTION!
Damage due to incorrect handling
When using thermowells, please ensure that the stem does not touch the bottom of the thermowell since, due to the different expansion coefficients of the materials, the stem may become buckled at the bottom of the thermowell.

- ► Use the correct insertion length (for the formula for the calculation of the insertion length, l_1, see the respective thermowell data sheet).

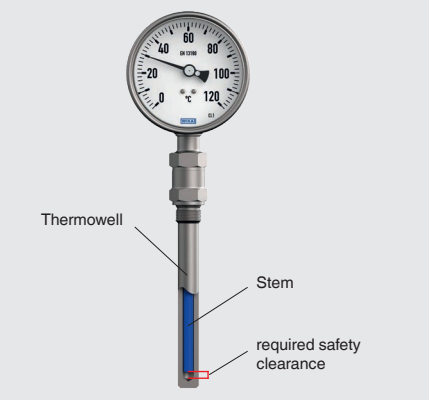

12968065.06 06/2019 EN/DE/FR/ES

5. Commissioning, operation / 6. Faults

EN

5.2 Thermal contact medium

When using thermowells, they must be filled with a thermal contact medium in order to reduce the heat transfer resistance between the outer wall of the probe and the inner wall of the thermowell. The working temperature of the thermal compound is -40 ... +200 °C.

WARNING!
Physical injuries and damage to equipment due to oil spraying out
When pouring a thermal contact medium into a hot thermowell, there is a danger of physical injuries and damage to equipment due to oil spraying out.
- ▶ Do not fill hot thermowells

6. Faults

CAUTION!
Physical injuries and damage to property and the environment
If faults cannot be eliminated by means of the listed measures, the instrument must be taken out of operation immediately.
- ▶ Ensure that pressure or signal is no longer present and protect against accidental commissioning.
- ▶ Contact the manufacturer.
- ▶ If a return is needed, please follow the instructions given in chapter 8.2 “Return”.

12968065.06 06/2019 EN/DE/FR/ES

6. Faults

EN

WARNING!
Physical injuries and damage to property and the environment caused by hazardous media
Upon contact with hazardous media (e.g. oxygen, acetylene, flammable or toxic substances), harmful media (e.g. corrosive, toxic, carcinogenic, radioactive), and also with refrigeration plants and compressors, there is a danger of physical injuries and damage to property and the environment.
Should a failure occur, aggressive media with extremely high temperature and under high pressure or vacuum may be present at the instrument.

- For these media, in addition to all standard regulations, the appropriate existing codes or regulations must also be followed.

For contact details see chapter 1 “General information” or the back page of the operating instructions.

Faults	Causes	Measures
The pointer does not move on rising temperature	Break in the bimetal possibly due to vibration	Remove the instrument and replace
No readability as a result of fogged/iced window	Operate at temperatures below the freezing point	Wait for the instrument temperature and the room temperature to equalise
	No filling liquid in the case	Replace with a thermometer with filling liquid
Pointer has fallen off	Too strong vibration or shock loading	Exchange the measuring instrument with a thermometer with filling
Filled instrument leaking in the region of the filling plug	Ambient temperature lower than -40 °C	Exchange with an instrument for ambient temperature up to -50 °C

12968065.06 06/2019 EN/DE/FR/ES

EN

6. Faults / 7. Maintenance and cleaning

Faults	Causes	Measures
Blisters in the window (laminated safety glass)	Ambient temperature too high	Isolate against radiated heat
Not possible to screw the instrument into the thermowell	Incorrect thread or stem diameter or thermowell stem too long	Exchange thermometer or thermowell
Dial has become coloured	Ambient temperature too high	Isolate against radiated heat
Window cracked	If necessary, secure thermometer via the case	Exchange the instrument

7. Maintenance and cleaning

For contact details see chapter 1 “General information” or the back page of the operating instructions.

7.1 Maintenance

These bimetal thermometers are maintenance-free!
The indicator should be checked once or twice every year. To do this the instrument must be disconnected from the process and checked using a temperature calibrator.

Repairs must only be carried out by the manufacturer.

12968065.06 06/2019 EN/DE/FR/ES

7. Maintenance and cleaning

7.2 Cleaning

EN

CAUTION!
Physical injuries and damage to property and the environment
Improper cleaning may lead to physical injuries and damage to property and the environment. Residual media in the dismounted instrument can result in a risk to persons, the environment and equipment.
► Carry out the cleaning process as described below.

1. Before cleaning, correctly disconnect the instrument from the mains.
2. Use the requisite protective equipment.
3. Clean the instrument with a moist cloth.

CAUTION!
Damage to the instrument
Improper cleaning may lead to damage to the instrument!
► Do not use any aggressive cleaning agents.
► Do not use any pointed and hard objects for cleaning.

4. Wash or clean the dismounted instrument, in order to protect persons and the environment from exposure to residual media.

12968065.06 06/2019 EN/DE/FR/ES

EN

8. Dismounting, return and disposal

8. Dismounting, return and disposal

WARNING!
Physical injuries and damage to property and the environment through residual media
Residual media in the dismounted instrument can result in a risk to persons, the environment and equipment.
- ▶ Observe the information in the material safety data sheet for the corresponding medium.
- ▶ Wash or clean the dismounted instrument, in order to protect persons and the environment from exposure to residual media.

8.1 Dismounting

WARNING!
Risk of burns
During dismounting there is a risk of dangerously hot media escaping.
- ▶ Let the instrument cool down sufficiently before dismounting it!

DANGER!
Danger to life caused by electric current
Upon contact with live parts, there is a direct danger to life.
- ▶ The dismounting of the instrument may only be carried out by skilled personnel.
- ▶ Remove the thermometer once the system has been isolated from power sources.

12968065.06 06/2019 EN/DE/FR/ES

EN

8. Dismounting, return and disposal

WARNING!
Physical injury
When dismounting, there is a danger from aggressive media and high pressures.
- ▶ Observe the information in the material safety data sheet for the corresponding medium.
- ▶ Remove the thermometer once the system has been depressurised.

8.2 Return

Strictly observe the following when shipping the instrument:
All instruments delivered to WIKA must be free from any kind of hazardous substances (acids, bases, solutions, etc.) and must therefore be cleaned before being returned.

When returning the instrument, use the original packaging or a suitable transport package.

To avoid damage:
1. Wrap the instrument in an antistatic plastic film.
2. Place the instrument, along with the shock-absorbing material, in the packaging. Place shock-absorbent material evenly on all sides of the shipping box.
3. If possible, place a bag, containing a desiccant, inside the packaging.
4. Label the shipment as transport of a highly sensitive measuring instrument.

Information on returns can be found under the heading “Service” on our local website.

8.3 Disposal
Incorrect disposal may endanger the environment.
Dispose of instrument components and packaging materials in an environmentally compatible way and in accordance with the country-specific waste disposal regulations.

12968065.06 06/2019 EN/DE/FR/ES

EN

9. Specifications

9. Specifications

Bimetal thermometer, model 55	
Measuring element	Bimetal coil
Nominal size	63, 100, 160
Instrument version ■ Model A55 ■ Model R55 ■ Model S55	 Back mount (axial) Lower mount (radial) Back mount, housing can rotate and swivel
Permitted operating temperature	-50 ... +60 °C
Working pressure ■ Continuous load (1 year) ■ Short term (max. 24 h)	 Measuring range (EN 13190) Scale range (EN 13190)
Case, ring	Stainless steel 304SS
Stem, process connection	Stainless steel 316SS
Ingress protection	IP65 per IEC/EN 60529 IP66, liquid-filled

For further specifications see WIKA data sheet TM 55.01 and order documentation.

12968065.06 06/2019 EN/DE/FR/ES

Inhalt

DE

1. Allgemeines	24
2. Aufbau und Funktion	25
3. Sicherheit	26
4. Transport, Verpackung und Lagerung	31
5. Inbetriebnahme, Betrieb	33
6. Störungen	36
7. Wartung und Reinigung	38
8. Demontage, Rücksendung und Entsorgung	40
9. Technische Daten	42

12968065.06 06/2019 EN/DE/FR/ES

DE

1. Allgemeines

1. Allgemeines

- Das in der Betriebsanleitung beschriebene Bimetallthermometer wird nach dem aktuellen Stand der Technik konstruiert und gefertigt. Alle Komponenten unterliegen während der Fertigung strengen Qualitäts- und Umweltkriterien. Unsere Managementsysteme sind nach ISO 9001 und ISO 14001 zertifiziert.
- Diese Betriebsanleitung gibt wichtige Hinweise zum Umgang mit dem Gerät. Voraussetzung für sicheres Arbeiten ist die Einhaltung aller angegebenen Sicherheitshinweise und Handlungsanweisungen.
- Die für den Einsatzbereich des Gerätes geltenden örtlichen Unfallverhütungsvorschriften und allgemeinen Sicherheitsbestimmungen einhalten.
- Die Betriebsanleitung ist Produktbestandteil und muss in unmittelbarer Nähe des Gerätes für das Fachpersonal jederzeit zugänglich aufbewahrt werden.
- Das Fachpersonal muss die Betriebsanleitung vor Beginn aller Arbeiten sorgfältig durchgelesen und verstanden haben.
- Es gelten die allgemeinen Geschäftsbedingungen in den Verkaufsunterlagen.
- Technische Änderungen vorbehalten.
- Weitere Informationen:
  - Internet-Adresse: www.wika.de / www.wika.com
  - zugehöriges Datenblatt: TM 55.01
  - Anwendungsberater: Tel.: +49 9372 132-0
    Fax: +49 9372 132-406
    info@wika.de

12968065.06 06/2019 EN/DE/FR/ES

2. Aufbau und Funktion

2. Aufbau und Funktion

2.1 Überblick

DE

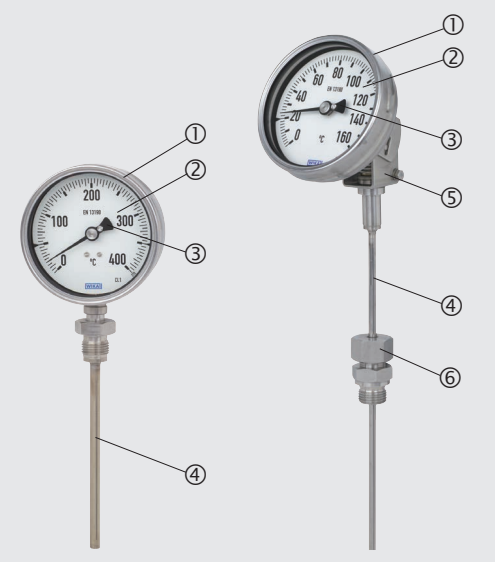

① Gehäuse
② Zifferblatt
③ Zeiger
④ Tauchrohr
⑤ Ausführung dreh- und schwenkbar
⑥ Prozessanschluss

12968065.06 06/2019 EN/DE/FR/ES

DE

2. Aufbau und Funktion / 3. Sicherheit

2.2 Beschreibung
Das Bimetallthermometer dieser Typenreihen ist vorgesehen zum Einbau in Rohrleitungen, Behälter, Anlagen und Maschinen.

Tauchschaft und Gehäuse sind aus CrNi-Stahl gefertigt.
Zur optimalen Anpassung an den Prozess sind verschiedene Einbaulängen und Prozessanschlüsse erhältlich.

Durch die hohe Schutzart der Thermometer (IP65) und Flüssigkeitsdämpfung ist der Einsatz bei Vibrationen möglich.

2.3 Lieferumfang
Lieferumfang mit dem Lieferschein abgleichen.

3. Sicherheit

3.1 Symbolerklärung

WARNUNG!
... weist auf eine möglicherweise gefährliche Situation hin, die zum Tod oder zu schweren Verletzungen führen kann, wenn sie nicht gemieden wird.

VORSICHT!
... weist auf eine möglicherweise gefährliche Situation hin, die zu geringfügigen oder leichten Verletzungen bzw. Sach- und Umweltschäden führen kann, wenn sie nicht gemieden wird.

WARNUNG!
... weist auf eine möglicherweise gefährliche Situation hin, die durch heiße Oberflächen oder Flüssigkeiten zu Verbrennungen führen kann, wenn sie nicht gemieden wird.

Information
... hebt nützliche Tipps und Empfehlungen sowie Informationen für einen effizienten und störungsfreien Betrieb hervor.

12968065.06 06/2019 EN/DE/FR/ES

3. Sicherheit

3.2 Bestimmungsgemäße Verwendung

Die Bimetallthermometer werden hauptsächlich in der Prozessindustrie eingesetzt, um die Temperatur des Prozesses zu überwachen.

DE

Das Gerät ist ausschließlich für den hier beschriebenen bestimmungsgemäßen Verwendungszweck konzipiert und konstruiert und darf nur dementsprechend verwendet werden.

Die technischen Spezifikationen in dieser Betriebsanleitung sind einzuhalten. Eine unsachgemäße Handhabung oder ein Betreiben des Gerätes außerhalb der technischen Spezifikationen macht die sofortige Stilllegung und Überprüfung durch einen autorisierten WIKA-Servicemitarbeiter erforderlich.

Ansprüche jeglicher Art aufgrund von nicht bestimmungsgemäßer Verwendung sind ausgeschlossen.

3.3 Fehlgebrauch

WARNUNG!
Verletzungen durch Fehlgebrauch
Fehlgebrauch des Gerätes kann zu gefährlichen Situationen und Verletzungen führen.

- ▶ Eigenmächtige Umbauten am Gerät unterlassen.
- ▶ Gerät nicht in explosionsgefährdeten Bereichen einsetzen.
- ▶ Gerät nicht für abrasive und viskose Messstoffe verwenden.

Jede über die bestimmungsgemäße Verwendung hinausgehende oder andersartige Benutzung gilt als Fehlgebrauch.

Dieses Gerät nicht in Sicherheits- oder in Not-Aus-Einrichtungen benutzen.

12968065.06 06/2019 EN/DE/FR/ES

3. Sicherheit

DE

3.4 Verantwortung des Betreibers

Das Gerät wird im gewerblichen Bereich eingesetzt. Der Betreiber unterliegt daher den gesetzlichen Pflichten zur Arbeitssicherheit.

Die Sicherheitshinweise dieser Betriebsanleitung, sowie die für den Einsatzbereich des Gerätes gültigen Sicherheits-, Unfallverhütungs- und Umweltschutzvorschriften einhalten.

Der Betreiber ist verpflichtet das Typenschild lesbar zu halten.

Für ein sicheres Arbeiten am Gerät muss der Betreiber sicherstellen,

- dass eine entsprechende Erste-Hilfe-Ausrüstung vorhanden ist und bei Bedarf jederzeit Hilfe zur Stelle ist.
- dass das Bedienpersonal regelmäßig in allen zutreffenden Fragen von Arbeitssicherheit, Erste Hilfe und Umweltschutz unterwiesen wird, sowie die Betriebsanleitung und insbesondere die darin enthaltenen Sicherheitshinweise kennt.
- dass das Gerät gemäß der bestimmungsgemäßen Verwendung für den Anwendungsfall geeignet ist.

3.5 Personalqualifikation

WARNUNG!
Verletzungsgefahr bei unzureichender Qualifikation
Unsachgemäßer Umgang kann zu erheblichen Personen- und Sachschäden führen.

- ▶ Die in dieser Betriebsanleitung beschriebenen Tätigkeiten nur durch Fachpersonal nachfolgend beschriebener Qualifikation durchführen lassen.
- ▶ Unqualifiziertes Personal von den Gefahrenbereichen fernhalten.

12968065.06 06/2019 EN/DE/FR/ES

3. Sicherheit

Fachpersonal
Das Fachpersonal ist aufgrund seiner fachlichen Ausbildung, seiner Kenntnisse der Mess- und Regelungstechnik und seiner Erfahrungen sowie Kenntnis der landesspezifischen Vorschriften, geltenden Normen und Richtlinien in der Lage, die beschriebenen Arbeiten auszuführen und mögliche Gefahren selbstständig zu erkennen.

DE

Spezielle Einsatzbedingungen verlangen weiteres entsprechendes Wissen, z. B. über aggressive Medien.

3.6 Persönliche Schutzausrüstung

Die persönliche Schutzausrüstung dient dazu, das Fachpersonal gegen Gefahren zu schützen, die dessen Sicherheit oder Gesundheit bei der Arbeit beeinträchtigen könnten. Beim Ausführen der verschiedenen Arbeiten an und mit dem Gerät muss das Fachpersonal persönliche Schutzausrüstung tragen.

Im Arbeitsbereich angebrachte Hinweise zur persönlichen Schutzausrüstung befolgen!

Die erforderliche persönliche Schutzausrüstung muss vom Betreiber zur Verfügung gestellt werden.

Schutzbrille tragen!
Schutz der Augen vor umherfliegenden Teilen und Flüssigkeitsspritzern.

Schutzhandschuhe tragen!
Schutz der Hände vor Reibung, Abschürfung, Einstichen oder tieferen Verletzungen sowie vor Berührung mit heißen Oberflächen und aggressiven Messstoffen.

12968065.06 06/2019 EN/DE/FR/ES

DE

3. Sicherheit

3.7 Beschilderung, Sicherheitskennzeichnungen

Typenschild (Beispiel)

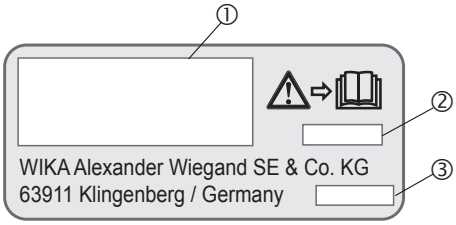

① Typ
② Herstellungsjahr
③ Seriennummer

Vor Montage und Inbetriebnahme des Gerätes unbedingt die Betriebsanleitung lesen!

Geräte nicht nachträglich mit Füllflüssigkeit befüllen.

12968065.06 06/2019 EN/DE/FR/ES

4. Transport, Verpackung und Lagerung

4. Transport, Verpackung und Lagerung

DE

4.1 Transport

Gerät auf eventuell vorhandene Transportschäden untersuchen.
Offensichtliche Schäden unverzüglich mitteilen.

VORSICHT!
Beschädigungen durch unsachgemäßen Transport
Bei unsachgemäßem Transport können Sachschäden in erheblicher Höhe entstehen.

- ▶ Beim Abladen der Packstücke bei Anlieferung sowie innerbetrieblichem Transport vorsichtig vorgehen und die Symbole auf der Verpackung beachten.
- ▶ Bei innerbetrieblichem Transport die Hinweise unter Kapitel 4.2 „Verpackung und Lagerung“ beachten.

Wird das Gerät von einer kalten in eine warme Umgebung transportiert, so kann durch Kondensatbildung eine Störung der Gerätefunktion eintreten. Vor einer erneuten Inbetriebnahme die Angleichung der Gerätetemperatur an die Raumtemperatur abwarten.

4.2 Verpackung und Lagerung

Verpackung erst unmittelbar vor der Montage entfernen.
Die Verpackung aufbewahren, denn diese bietet bei einem Transport einen optimalen Schutz (z. B. wechselnder Einbauort, Reparatursendung).

Zulässige Bedingungen am Lagerort:
Lagertemperatur: -20 ... +60 °C

Folgende Einflüsse vermeiden:

- Direktes Sonnenlicht oder Nähe zu heißen Gegenständen
- Mechanische Vibration, mechanischer Schock (hartes Aufstellen)
- Ruß, Dampf, Staub und korrosive Gase
- Explosionsgefährdete Umgebung, entzündliche Atmosphären

12968065.06 06/2019 EN/DE/FR/ES

DE

4. Transport, Verpackung und Lagerung

Das Gerät in der Originalverpackung an einem Ort lagern, der die oben gelisteten Bedingungen erfüllt. Wenn die Originalverpackung nicht vorhanden ist, dann das Gerät wie folgt verpacken und lagern:

1. Das Gerät in eine antistatische Plastikfolie einhüllen.
2. Das Gerät mit dem Dämmmaterial in der Verpackung platzieren.
3. Bei längerer Einlagerung (mehr als 30 Tage) einen Beutel mit Trocknungsmittel der Verpackung beilegen.

WARNUNG!
Vor der Einlagerung des Gerätes (nach Betrieb) alle anhaftenden Messstoffreste entfernen. Dies ist besonders wichtig, wenn der Messstoff gesundheitsgefährdend ist, wie z. B. ätzend, giftig, krebserregend, radioaktiv, usw.

Empfohlen wird bei Temperaturen um den Taupunkt (±1 °C um 0 °C) immer die Verwendung einer Flüssigkeitsdämpfung.

12968065.06 06/2019 EN/DE/FR/ES

5. Inbetriebnahme, Betrieb

5. Inbetriebnahme, Betrieb

DE

WARNUNG!
Körperverletzungen, Sach- und Umweltschäden durch gefährliche Messstoffe
Bei Kontakt mit gefährlichen Messstoffen (z. B. Sauerstoff, Acetylen, brennbaren oder giftigen Stoffen), gesundheitsgefährdenden Messstoffen (z. B. ätzend, giftig, krebserregend, radioaktiv) sowie bei Kälteanlagen, Kompressoren besteht die Gefahr von Körperverletzungen, Sach- und Umweltschäden. Am Gerät können im Fehlerfall aggressive Medien mit extremer Temperatur und unter hohem Druck oder Vakuum anliegen.

- ▶ Bei diesen Messstoffen müssen über die gesamten allgemeinen Regeln hinaus die einschlägigen Vorschriften beachtet werden.

WARNUNG!
Verletzungen durch heiße Oberflächen oder Flüssigkeiten
Im Tauchschaft befindet sich auch die Füllflüssigkeit, diese kann sich bei einer Temperatur > 250 °C vertrüben bzw. verfärben und gegebenenfalls zum Brand führen.

- ▶ Bei gefüllten Geräten darauf achten, dass die Messstofftemperatur unter 250 °C liegt.

Beim Einschrauben der Geräte darf die dazu erforderliche Kraft nicht über das Gehäuse aufgebracht werden, sondern mit geeignetem Werkzeug nur über die dafür vorgesehenen Schlüsselflächen.

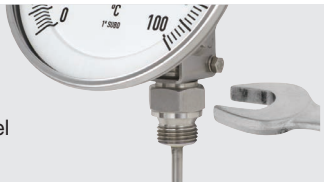

Montage mit Gabelschlüssel

12968065.06 06/2019 EN/DE/FR/ES

DE

5. Inbetriebnahme, Betrieb

Bei der Montage eines dreh- und schwenkbaren Bimetallthermometers sind besondere Vorschriften zu beachten. Um die Anzeige in die gewünschte Position zu bringen, müssen folgende Schritte eingehalten werden:

1. Die Konter- oder Überwurfmutter muss am Prozessanschluss gelöst sein.
2. Sechskant- und Schlitzschrauben müssen am Schwenkgelenk gelöst sein.

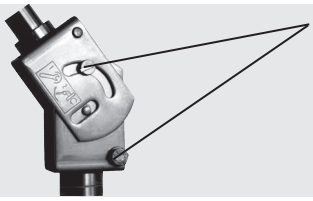

lösen

Unbedingt auch die auf der gegenüberliegenden Seite liegenden Schrauben lösen!

3. Anzeige positionieren, Sechskant- und Schlitzschrauben anziehen und schließlich die Konter- oder Überwurfmutter fest anziehen.

12968065.06 06/2019 EN/DE/FR/ES

5. Inbetriebnahme, Betrieb

5.1 Verwendung von Schutzrohren

VORSICHT!
Beschädigung durch falsche Handhabung
Bei der Verwendung von Schutzrohren beachten, dass der Tauchschaft nicht den Boden des Schutzrohres berührt, da durch die unterschiedlichen Ausdehnungskoeffizienten der Materialen sich der Tauchschaft am Boden des Schutzrohres verbiegen könnte.

- Korrekte Einbaulänge verwenden (Formeln zur Berechnung der Einbaulänge l_1 siehe entsprechendes Schutzrohrdatenblatt).

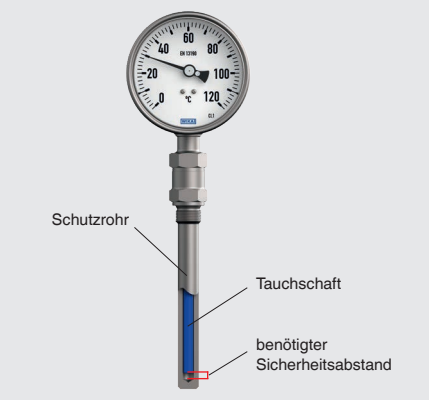

DE

12968065.06 06/2019 EN/DE/FR/ES

5. Inbetriebnahme, Betrieb / 6. Störungen

DE

5.2 Wärmekontaktmittel
Bei Verwendung von Schutzrohren möglichst durch Einfüllen eines Wärmekontaktmittels den Wärmeübertragungswiderstand zwischen Fühleraußenwand und Schutzrohrinnenwand reduzieren. Die Arbeitstemperatur der Wärmeleitpaste beträgt -40 ... +200 °C.

WARNUNG!
Körperverletzungen und Sachschäden durch herausspritzendes Öl
Bei Einfüllen eines Wärmekontaktmittels in heiße Schutzrohre besteht die Gefahr von Körperverletzungen und Sachschäden durch herausspritzendes Öl.
- ▶ Nicht in heiße Schutzrohre einfüllen

6. Störungen

VORSICHT!
Körperverletzungen, Sach- und Umweltschäden
Können Störungen mit Hilfe der aufgeführten Maßnahmen nicht beseitigt werden, Gerät unverzüglich außer Betrieb setzen.
- ▶ Sicherstellen, dass kein Druck bzw. Signal mehr anliegt und gegen versehentliche Inbetriebnahme schützen.
- ▶ Kontakt mit dem Hersteller aufnehmen.
- ▶ Bei notwendiger Rücksendung die Hinweise unter Kapitel 8.2 „Rücksendung“ beachten.

12968065.06 06/2019 EN/DE/FR/ES

6. Störungen

WARNUNG!
Körperverletzungen, Sach- und Umweltschäden durch gefährliche Messstoffe
Bei Kontakt mit gefährlichen Messstoffen (z. B. Sauerstoff, Acetylen, brennbaren oder giftigen Stoffen), gesundheitsgefährdenden Messstoffen (z. B. ätzend, giftig, krebserregend, radioaktiv) sowie bei Kälteanlagen, Kompressoren besteht die Gefahr von Körperverletzungen, Sach- und Umweltschäden.
Am Gerät können im Fehlerfall aggressive Medien mit extremer Temperatur und unter hohem Druck oder Vakuum anliegen.

- Bei diesen Messstoffen müssen über die gesamten allgemeinen Regeln hinaus die einschlägigen Vorschriften beachtet werden.

DE

Kontaktdaten siehe Kapitel 1 „Allgemeines“ oder Rückseite der Betriebsanleitung.

Störungen	Ursachen	Maßnahmen
Zeiger bewegt sich nicht bei ansteigender Temperatur	Bimetallbruch durch etwaige Vibrationen	Gerät ausbauen und ersetzen
Keine Ablesbarkeit durch beschlagene/ vereiste Sichtscheibe	Einsatz bei Temperaturen unter dem Gefrierpunkt	Angleichung der Gerätetemperatur an die Raumtemperatur abwarten
	Keine Füllflüssigkeit im Gehäuse	Ersatz durch ein Thermometer mit Füllflüssigkeit
Abgefallener Zeiger	Zu starke Vibrations- oder Schockbelastung	Austausch des Messgerätes durch Thermometer mit Füllung
Gefülltes Gerät im Bereich des Füllstopfens undicht	Umgebungstemperatur niedriger als -40 °C	Austausch durch ein Gerät für Umgebungstemperatur bis zu -50 °C

12968065.06 06/2019 EN/DE/FR/ES

DE

6. Störungen / 7. Wartung und Reinigung

Störungen	Ursachen	Maßnahmen
Bläschen in der Sichtscheibe (Mehrschichten-sicherheitsglas)	Zu hohe Umgebungs-temperatur	Gegen Strahlungswärme isolieren
Gerät lässt sich nicht in das Schutzrohr einschrauben	Falsches Gewinde bzw. Tauchrohrdurchmesser bzw. Tauchrohr zu lang	Thermometer oder Schutzrohr austauschen
Zifferblatt verfärbt sich	Zu hohe Umgebungs-temperatur	Gegen Strahlungswärme isolieren
Sichtscheibe gesprungen	Ggf. Thermometer über Gehäuse festgezogen	Austausch des Gerätes

7. Wartung und Reinigung

Kontaktdaten siehe Kapitel 1 „Allgemeines“ oder Rückseite der Betriebsanleitung.

7.1 Wartung

Diese Bimetallthermometer sind wartungsfrei!
Eine Überprüfung der Anzeige sollte etwa 1 bis 2 mal pro Jahr erfolgen. Dazu ist das Gerät vom Prozess zu trennen und mit einem Temperaturkalibrator zu kontrollieren.

Reparaturen sind ausschließlich vom Hersteller durchzuführen.

12968065.06 06/2019 EN/DE/FR/ES

7. Wartung und Reinigung

7.2 Reinigung

VORSICHT!
Körperverletzungen, Sach- und Umweltschäden
Eine unsachgemäße Reinigung führt zu Körperverletzungen, Sach- und Umweltschäden. Messstoffreste im ausgebauten Gerät können zur Gefährdung von Personen, Umwelt und Einrichtung führen.
- ► Reinigungsvorgang wie folgt beschrieben durchführen.

DE

1. Vor der Reinigung das Gerät vom Netz trennen.
2. Notwendige Schutzausrüstung verwenden.
3. Das Gerät mit einem feuchten Tuch reinigen.

VORSICHT!
Beschädigung des Gerätes
Eine unsachgemäße Reinigung führt zur Beschädigung des Gerätes!
- ► Keine aggressiven Reinigungsmittel verwenden.
- ► Keine harten und spitzen Gegenstände zur Reinigung verwenden.

4. Ausgebautes Gerät spülen bzw. säubern, um Personen und Umwelt vor Gefährdung durch anhaftende Messstoffreste zu schützen.

12968065.06 06/2019 EN/DE/FR/ES

DE

8. Demontage, Rücksendung und Entsorgung

8. Demontage, Rücksendung und Entsorgung

WARNUNG!
Körperverletzungen, Sach- und Umweltschäden durch Messstoffreste
Messstoffreste im ausgebauten Gerät können zur Gefährdung von Personen, Umwelt und Einrichtung führen.
- ▶ Angaben im Sicherheitsdatenblatt für den entsprechenden Messstoff beachten.
- ▶ Ausgebautes Gerät spülen bzw. säubern, um Personen und Umwelt vor Gefährdung durch anhaftende Messstoffreste zu schützen.

8.1 Demontage

WARNUNG!
Verbrennungsgefahr
Beim Ausbau besteht Gefahr durch austretende, gefährlich heiße Messstoffe.
- ▶ Vor dem Ausbau das Gerät ausreichend abkühlen lassen!

GEFAHR!
Lebensgefahr durch elektrischen Strom
Bei Berührung mit spannungsführenden Teilen besteht unmittelbare Lebensgefahr.
- ▶ Die Demontage des Gerätes darf nur durch Fachpersonal erfolgen.
- ▶ Thermometer im stromlosen Zustand demontieren.

12968065.06 06/2019 EN/DE/FR/ES

8. Demontage, Rücksendung und Entsorgung

WARNUNG!
Körperverletzung
Bei der Demontage besteht Gefahr durch aggressive Medien und hohe Drücke.
- ▶ Angaben im Sicherheitsdatenblatt für den entsprechenden Messstoff beachten.
- ▶ Thermometer im drucklosen Zustand demontieren.

DE

8.2 Rücksendung

Beim Versand des Gerätes unbedingt beachten:
Alle an WIKA gelieferten Geräte müssen frei von Gefahrstoffen (Säuren, Laugen, Lösungen, etc.) sein und sind daher vor der Rücksendung zu reinigen.

Zur Rücksendung des Gerätes die Originalverpackung oder eine geeignete Transportverpackung verwenden.

Um Schäden zu vermeiden:
1. Das Gerät in eine antistatische Plastikfolie einhüllen.
2. Das Gerät mit dem Dämmmaterial in der Verpackung platzieren. Zu allen Seiten der Transportverpackung gleichmäßig dämmen.
3. Wenn möglich einen Beutel mit Trocknungsmittel der Verpackung beifügen.
4. Sendung als Transport eines hochempfindlichen Messgerätes kennzeichnen.

Hinweise zur Rücksendung befinden sich in der Rubrik „Service“ auf unserer lokalen Internetseite.

8.3 Entsorgung
Durch falsche Entsorgung können Gefahren für die Umwelt entstehen. Gerätekomponenten und Verpackungsmaterialien entsprechend den landesspezifischen Abfallbehandlungs- und Entsorgungsvorschriften umweltgerecht entsorgen.

12968065.06 06/2019 EN/DE/FR/ES

DE

9. Technische Daten

9. Technische Daten

Bimetallthermometer, Typ 55	
Messelement	Bimetallwendel
Nenngröße	63, 100, 160
Geräteausführung ■ Typ A5x ■ Typ R5x ■ Typ S5x	 Anschlusslage rückseitig (axial) Anschlusslage unten (radial) Anschlusslage rückseitig, Gehäuse dreh- und schwenkbar
Zulässige Umgebungstemperatur	-50 ... +60 °C
Verwendungsbereich ■ Dauerbelastung (1 Jahr) ■ Kurzzeitig (max. 24 h)	 Messbereich (EN 13190) Anzeigebereich (EN 13190)
Gehäuse, Ring	CrNi-Stahl 304SS
Tauchschaft, Prozessanschluss	CrNi-Stahl 316SS
Schutzart	IP65 nach IEC/EN 60529 IP66, flüssigkeitsgefüllt

Weitere technische Daten siehe WIKA-Datenblatt TM 55.01 und Bestellunterlagen.

12968065.06 06/2019 EN/DE/FR/ES

Sommaire

1. Généralités	44
2. Conception et fonction	45
3. Sécurité	46
4. Transport, emballage et stockage	51
5. Mise en service, exploitation	53
6. Dysfonctionnements	56
7. Entretien et nettoyage	58
8. Démontage, retour et mise au rebut	60
9. Caractéristiques techniques	62

FR

12968065.06 06/2019 EN/DE/FR/ES

1. Généralités

1. Généralités

FR

- Le thermomètre bimétallique décrit dans le mode d'emploi est conçu et fabriqué selon les dernières technologies en vigueur. Tous les composants sont soumis à des critères de qualité et d'environnement stricts durant la fabrication. Nos systèmes de gestion sont certifiés selon ISO 9001 et ISO 14001.
- Ce mode d'emploi donne des indications importantes concernant l'utilisation de l'instrument. Il est possible de travailler en toute sécurité avec ce produit en respectant toutes les consignes de sécurité et d'utilisation.
- Respecter les prescriptions locales de prévention contre les accidents et les prescriptions générales de sécurité en vigueur pour le domaine d'application de l'instrument
- Le mode d'emploi fait partie de l'instrument et doit être conservé à proximité immédiate de l'instrument et accessible à tout moment pour le personnel qualifié.
- Le personnel qualifié doit, avant de commencer toute opération, avoir lu soigneusement et compris le mode d'emploi.
- Les conditions générales de vente mentionnées dans les documents de vente s'appliquent.
- Sous réserve de modifications techniques.
- Pour obtenir d'autres informations:
  - Consulter notre site internet : www.wika.fr
  - Fiche technique correspondante : TM 55.01
  - Anwendungsberater : Tel.: 0 820 951010 (0,15 €/min)
    +33 1 787049-46
    Fax: 0 891 035891 (0,35 €/min)
    info@wika.fr

12968065.06 06/2019 EN/DE/FR/ES

2. Conception et fonction

2. Conception et fonction

2.1 Vue générale

① Boîtier
② Cadran
③ Aiguille
④ Plongeur
⑤ Version orientable et cadran inclinable
⑥ Raccord process

FR

12968065.06 06/2019 EN/DE/FR/ES

2. Conception et fonction / 3. Sécurité

2.2 Description
Les thermomètres bimétalliques de cette série de type sont conçus pour l'installation dans des conduites, réservoirs, systèmes ou machines.

Le tube plongeur et le boîtier sont en acier inoxydable CrNi.
Pour l'adaptation optimale au processus, des tubes de différentes longueurs de montage et raccords process sont disponibles.

FR

Grâce à l'indice de protection élevée des thermomètres (IP65) et à l'amortissement par liquide, ils peuvent être utilisés dans des zones de vibrations.

2.3 Détail de la livraison
Comparer le détail de la livraison avec le bordereau de livraison.

3. Sécurité

3.1 Explication des symboles

AVERTISSEMENT !
… indique une situation présentant des risques susceptibles de provoquer la mort ou des blessures graves si elle n'est pas évitée.

ATTENTION !
… indique une situation potentiellement dangereuse et susceptible de provoquer de légères blessures ou des dommages matériels et pour l'environnement si elle n'est pas évitée.

AVERTISSEMENT !
… indique une situation présentant des risques susceptibles de provoquer des brûlures dues à des surfaces ou liquides chauds si elle n'est pas évitée.

12968065.06 06/2019 EN/DE/FR/ES

3. Sécurité

Information
… met en exergue les conseils et recommandations utiles de même que les informations permettant d'assurer un fonctionnement efficace et normal.

3.2 Utilisation conforme à l'usage prévu

Les thermomètres bimétalliques sont principalement utilisés dans l'industrie du process pour surveiller la température.

FR

Le thermomètre bimétallique est conçu et construit exclusivement pour une utilisation conforme à l'usage prévu décrit ici et ne doit être utilisé qu'en conséquence.

Les spécifications techniques mentionnées dans ce mode d'emploi doivent être respectées. En cas d'utilisation inadéquate ou de fonctionnement du thermomètre bimétallique en dehors des spécifications techniques, un arrêt et contrôle doivent être immédiatement effectués par un collaborateur autorisé du service de WIKA.

Aucune réclamation ne peut être recevable en cas d'utilisation non conforme à l'usage prévu.

3.3 Utilisation inappropriée

AVERTISSEMENT !
Blessures causées par une utilisation inappropriée
Une utilisation inappropriée peut conduire à des situations dangereuses et à des blessures.
- ▶ S'abstenir de modifications non autorisées sur l'instrument
- ▶ Ne pas utiliser l'instrument en zone explosive.
- ▶ Ne pas utiliser l'instrument avec un fluide abrasif ou visqueux.

Toute utilisation différente ou au-delà de l'utilisation prévue est considérée comme inappropriée.

Ne pas utiliser cet instrument dans des dispositifs de sécurité ou d'arrêt d'urgence.

12968065.06 06/2019 EN/DE/FR/ES

3. Sécurité

FR

3.4 Responsabilité de l‘opérateur

L‘instrument est prévu pour un usage dans le domaine industriel. L‘opérateur est de ce fait responsable des obligations légales en matière de sécurité du travail.

Les instructions de sécurité de ce mode d‘emploi comme les réglementations liées à la sécurité, à la prévention des accidents et à la protection de l‘environnement pour le domaine d‘application doivent être respectées.

L‘opérateur doit s‘assurer que la plaque signalétique reste lisible.

Afin de travailler en toute sécurité sur l‘instrument, la société exploitante doit s‘assurer

- qu‘un équipement de premier secours adapté est disponible et que les premiers soins peuvent être dispensés sur place à tout moment en cas de besoin.
- que le personnel de service soit formé à intervalles réguliers sur tous les sujets concernant la sécurité du travail, les premiers secours et la protection de l‘environnement et qu‘il connaît le mode d‘emploi et particulièrement les consignes de sécurité contenues dans celui-ci.
- que l‘instrument est adapté à l‘application en respect de l‘usage prévu de l‘instrument.

3.5 Qualification du personnel

AVERTISSEMENT !
Danger de blessure en cas de qualification insuffisante !
Une utilisation non conforme peut entraîner d'importants dommages corporels et matériels.

- ▶ Les opérations décrites dans ce mode d'emploi ne doivent être effectuées que par un personnel ayant la qualification décrite ci-après.
- ▶ Tenir le personnel non qualifié à l'écart des zones dangereuses.

12968065.06 06/2019 EN/DE/FR/ES

3. Sécurité

Personnel qualifié
Le personnel qualifié est, en raison de sa formation spécialisée, de ses connaissances dans le domaine de la technique de mesure et de régulation et de ses expériences de même que de sa connaissance des prescriptions nationales des normes et directives en vigueur, en mesure d'effectuer les travaux décrits et de reconnaître automatiquement les dangers potentiels.

FR

Les conditions d'utilisation spéciales exigent également une connaissance adéquate, par ex. des liquides agressifs.

3.6 Equipement de protection individuelle
L'équipement de protection individuelle sert à protéger le personnel qualifié contre les dangers pouvant entraver la sécurité et la santé de ce dernier durant le travail. Le personnel qualifié doit porter l'équipement de protection individuelle lors de l'exécution des différents travaux sur et avec l'instrument.

Respecter les indications concernant l'équipement de protection individuelle dans la zone de travail !

L'équipement de protection individuelle requis doit être mis à disposition par l'utilisateur.

Porter des lunettes de protection !
Protéger les yeux contre les projections et les éclaboussures.

Porter de gants de protection !
Protéger les mains contre les frottements, les éraflures, les piqûres ou les blessures profondes de même que contre tout contact avec les surfaces chaudes et les fluides agressifs.

12968065.06 06/2019 EN/DE/FR/ES

FR

3. Sécurité

3.7 Etiquetage, marquages de sécurité

Plaque signalétique (exemple)

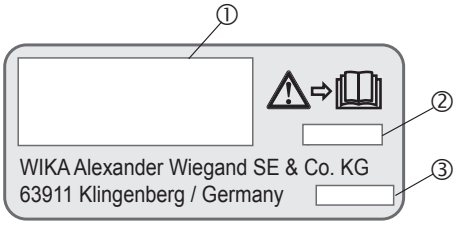

① Type
② Année de fabrication
③ Numéro de série

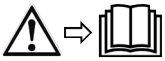

Avant de monter et mettre l'instrument en service, lire impérativement le mode d'emploi !

Ne pas remplir ultérieurement les appareils de liquide de remplissage.

12968065.06 06/2019 EN/DE/FR/ES

4. Transport, emballage et stockage

4. Transport, emballage et stockage

FR

4.1 Transport

Vérifier s'il existe des dégâts sur l'instrument liés au transport.
Communiquer immédiatement les dégâts constatés.

ATTENTION !
Dommages liés à un transport inapproprié
Un transport inapproprié peut donner lieu à des dommages importants.

- ▶ Lors du déchargement des colis à la livraison comme lors du transport des colis en interne après réception, il faut procéder avec soin et observer les consignes liées aux symboles figurant sur les emballages.
- ▶ Lors du transport en interne, observer les instructions du chapitre 4.2 "Emballage et stockage".

Si l'instrument est transporté d'un environnement froid dans un environnement chaud, la formation de condensation peut provoquer un dysfonctionnement fonctionnel de l'instrument. Il est nécessaire d'attendre que la température de l'instrument se soit adaptée à la température ambiante avant une nouvelle mise en service.

4.2 Emballage et stockage

N'enlever l'emballage qu'avant le montage.
Conserver l'emballage, celui-ci offre, lors d'un transport, une protection optimale (par ex. changement de lieu d'utilisation, renvoi pour réparation).

Conditions admissibles sur le lieu de stockage:
Température de stockage : -20 ... +60 °C

Eviter les influences suivantes :

- Lumière solaire directe ou proximité d'objets chauds
- Vibrations mécaniques, chocs mécaniques (mouvements brusques en le posant)
- Suie, vapeur, poussière et gaz corrosifs
- Environnement présentant des risques d'explosion, atmosphères inflammables

12968065.06 06/2019 EN/DE/FR/ES

4. Transport, emballage et stockage

Conserver l'instrument dans l'emballage original dans un endroit qui satisfait aux conditions susmentionnées. Si l'emballage original n'est pas disponible, emballer et stocker l'instrument comme suit:

1. Emballer l'instrument dans une feuille de plastique antistatique.
2. Placer l'instrument avec le matériau isolant dans l'emballage.
3. En cas de stockage long (plus de 30 jours), mettre également un sachet absorbeur d'humidité dans l'emballage.

FR

AVERTISSEMENT !
Enlever tous les restes de fluides adhérents avant l'entreposage de l'appareil (après le fonctionnement). Ceci est particulièrement important lorsque le fluide représente un danger pour la santé, comme p. ex. des substances corrosives, toxiques, carcinogènes, radioactives etc.

Lorsque le thermomètre est utilisé dans une plage de températures près du point de rosée (±1 °C, près de 0 °C), l'utilisation d‘une amortissement par liquide est recommandée.

12968065.06 06/2019 EN/DE/FR/ES

5. Mise en service, exploitation

5. Mise en service, exploitation

FR

AVERTISSEMENT !
Blessures physiques et dommages aux équipements et à l'environnement causés par un fluide dangereux
Lors du contact avec un fluide dangereux (par ex. oxygène, acétylène, substances inflammables ou toxiques), un fluide nocif (par ex. corrosif, toxique, cancérigène, radioactif), et également avec des installations de réfrigération et des compresseurs, il y a un danger de blessures physiques et de dommages aux équipements et à l'environnement.
En cas d'erreur, des fluides agressifs peuvent être présents à une température extrême et sous une pression élevée ou sous vide au niveau de l'instrument.

- ▶ Pour ces fluides, les codes et directives appropriés existants doivent être observés en plus des régulations standard.

AVERTISSEMENT !
Blessures causées par surfaces ou liquides chauds
Le liquide se trouvant dans le tube plongeur peut se troubler ou changer de couleur ou même s'enflammer si la température dépasse 250 °C.

- ▶ Pour les instruments remplis de liquide, veiller à ce que la température du fluide de mesure ne dépasse pas 250 °C.

Lors du vissage des instruments, le couple de serrage ne doit pas être appliquée sur le boîtier et prise câblée mais seulement sur les surfaces prévues et ce avec un outil approprié.

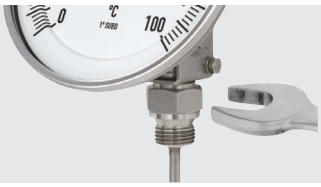

Montage avec clé plate

12968065.06 06/2019 EN/DE/FR/ES

FR

5. Mise en service, exploitation

Lors du montage d'un thermomètre bimétallique à cadran pivotant et orientable, des prescriptions particulières doivent être observées. Pour placer l'affichage dans la position requise, il convient de respecter les points suivants :

1. Le contre-écrou ou l'écrou-raccord doit être desserré sur le raccord process.
2. Les vis à vis pans et les vis à fente doivent être desserrées sur l'articulation pivotante.

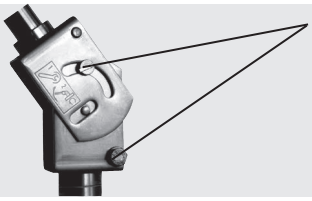

desserrer

Impérativement desserrer également les vis situées sur le côté opposé !

3. Positionner l'affichage, serrer les vis à six pans et les vis à fente et pour finir, serrer le contre-écrou ou l'écrou-raccord à fond.

12968065.06 06/2019 EN/DE/FR/ES

5. Mise en service, exploitation

5.1 Utilisation de doigts de gant

ATTENTION !
Dommages dus à une manipulation incorrecte
Lors de l'utilisation des doigts de gants, veiller à ce que le tube plongeur ne touche pas le fond du doigt de gant, en raison des différents coefficients d'extension des matériaux, il y a risque de déformation du tube plongeur sur le fond du doigt de gant.

- ► Utiliser la longueur utile correcte (pour la formule pour le calcul de la longueur d'insertion l_1, voir la fiche technique du doigt de gant correspondant).

FR

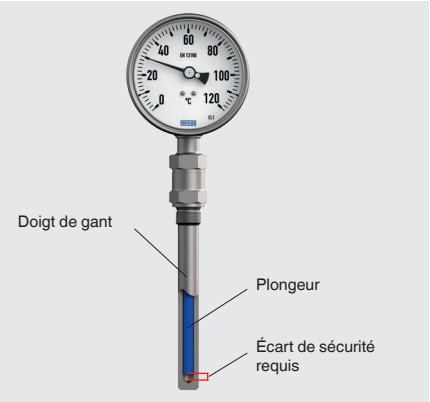

12968065.06 06/2019 EN/DE/FR/ES

5. Mise en service ... / 6. Dysfonctionnements

5.2 Fluide de contact thermique
En cas d‘utilisation de doigts de gants, il convient de réduire au maximum la résistance de transmission de la chaleur entre la paroi extérieure du capteur et la paroi intérieure du doigt de gant en ajoutant un agent de contact thermique. La température de service de la pâte thermique est de -40 ... +200 °C.

FR

AVERTISSEMENT !
Blessures physiques et dommages matériels dus à des projections d‘huile
Lorsque l‘on verse un fluide de contact thermique dans un doigt de gant chaud, il y a un danger de blessures physiques et de dommages matériels dus à des projections d‘huile.
- ► Ne pas verser dans des doigts de gant chauds

6. Dysfonctionnements

ATTENTION !
Blessures physiques, dommages aux équipements et à l‘environnement
Si les défauts ne peuvent pas être éliminés au moyen des mesures listées, l‘instrument doit être mis hors service immédiatement.
- ► S‘assurer que la pression ou le signal n‘est plus présent et protéger contre une mise en service accidentelle.
- ► Contacter le fabricant.
- ► S‘il est nécessaire de retourner l‘instrument au fabricant, prière de respecter les indications mentionnées au chapitre 8.2 “Retour”.

12968065.06 06/2019 EN/DE/FR/ES

6. Dysfonctionnements

AVERTISSEMENT !
Blessures physiques et dommages aux équipements et à l'environnement causés par un fluide dangereux
Lors du contact avec un fluide dangereux (par ex. oxygène, acétylène, substances inflammables ou toxiques), un fluide nocif (par ex. corrosif, toxique, cancérigène, radioactif), et également avec des installations de réfrigération et des compresseurs, il y a un danger de blessures physiques et de dommages aux équipements et à l'environnement.
En cas d'erreur, des fluides agressifs peuvent être présents à une température extrême et sous une pression élevée ou sous vide au niveau de l'instrument.

- Pour ces fluides, les codes et directives appropriés existants doivent être observés en plus des régulations standard.

FR

Pour le détail des contacts, merci de consulter le chapitre 1 "Généralités" ou le dos du mode d'emploi.

Dysfonctionnements	Raisons	Mesures
L'aiguille ne bouge pas alors que la température monte	Rupture dans le bimétal peut-être due aux vibrations	Retirer l'instrument et le remplacer
Aucune lisibilité à cause d'un voyant embrumé ou gelé	Travailler à des températures inférieures au point de congélation	Il est nécessaire d'attendre que la température de l'instrument se soit adaptée à la température ambiante
	Pas de liquide de remplissage dans le boîtier	Remplacer l'instrument par un thermomètre ayant un liquide de remplissage
L'aiguille s'est détachée	Vibrations ou chocs trop forts	Remplacer l'instrument de mesure par un thermomètre avec un liquide de remplissage

12968065.06 06/2019 EN/DE/FR/ES

FR

6. Dysfonctionnements / 7. Entretien et nettoyage

Dysfonctionnements	Raisons	Mesures
Instrument rempli qui fuit au niveau du bouchon de remplissage	Température ambiante inférieure à -40 °C	Remplacer par un instrument prévu pour une température ambiante jusqu'à -50 °C
Défauts dans le voyant (verre de sécurité feuilleté)	Température ambiante trop élevée	Isoler contre la chaleur rayonnante
Impossible de visser l'instrument dans le doigt de gant	Filetage ou diamètre du plongeur incorrect, ou tige trop longue	Remplacer le thermomètre ou le doigt de gant
Le cadran est devenu coloré	Température ambiante trop élevée	Isoler contre la chaleur rayonnante
Le voyant est craquelé	Si nécessaire, sécuriser le thermomètre par le boîtier	Remplacer l'instrument

7. Entretien et nettoyage

Pour le détail des contacts, merci de consulter le chapitre 1 “Généralités” ou le dos du mode d‘emploi.

7.1 Entretien

Ces thermomètres bimétalliques ne nécessitent pas d'entretien ! Un contrôle de l'affichage et des fonctions de commande est recommandé 1 à 2 fois/an. Pour le contrôle de l'affichage et des fonctions de commande, il faut isoler l'instrument du process et le contrôler avec un calibrateur de température.

Les réparations ne doivent être effectuées que par le fabricant.

12968065.06 06/2019 EN/DE/FR/ES

7. Entretien et nettoyage

7.2 Nettoyage

ATTENTION !
Blessures physiques, dommages aux équipements et à l‘environnement
Un nettoyage inapproprié peut conduire à des blessures physiques et à des dommages aux équipements ou à l‘environnement. Les restes de fluides se trouvant dans les instruments démontés peuvent mettre en danger les personnes, l‘environnement ainsi que l‘installation.
- ► Effectuer la procédure de nettoyage comme décrit ci-dessous.

FR

1. Avant le nettoyage, déconnecter correctement l‘instrument du secteur.
2. Utiliser l‘équipement de protection requis.
3. Nettoyer l‘instrument avec un chiffon humide.

ATTENTION !
Dommages à l‘instrument
Un nettoyage inapproprié peut endommager l‘instrument !
- ► Ne pas utiliser de détergents agressifs.
- ► Ne pas utiliser d‘objets pointus ou durs pour le nettoyage.

4. Laver et décontaminer l‘instrument démonté afin de protéger les personnes et l‘environnement contre le danger lié aux résidus de fluides.

12968065.06 06/2019 EN/DE/FR/ES

FR

8. Démontage, retour et mise au rebut

8. Démontage, retour et mise au rebut

AVERTISSEMENT !
Blessures physiques et dommages aux équipements et à l‘environnement liés aux résidus de fluides
Les restes de fluides se trouvant dans les instruments démontés peuvent mettre en danger les personnes, l‘environnement ainsi que l‘installation.

- ▶ Observer les informations de la fiche technique de sécurité de matériau pour le fluide correspondant.
- ▶ Laver et décontaminer l‘instrument démonté afin de protéger les personnes et l‘environnement contre le danger lié aux résidus de fluides.

8.1 Demontage

AVERTISSEMENT !
Danger de brûlure !
Avant le démontage du thermomètre, laisser refroidir suffisamment l'appareil ! Danger de brûlure lié à la sortie de fluides dangereux chauds.

DANGER !
Danger vital à cause du courant électrique
Lors du contact avec des parties sous tension, il y a un danger vital direct.

- ▶ Le démontage de l‘instrument ne doit être effectué que par du personnel qualifié.
- ▶ Retirer le thermomètre une fois que le système a été isolé des sources d‘énergie.

12968065.06 06/2019 EN/DE/FR/ES

8. Démontage, retour et mise au rebut

AVERTISSEMENT !
Blessures physiques
Lors du démontage, le danger peut provenir de fluides agressifs et de pressions élevées.
- ▶ Observer les informations de la fiche technique de sécurité de matériau pour le fluide correspondant.
- ▶ Retirer le thermomètre une fois que le système a été mis hors pression.

FR

8.2 Retour

En cas d'envoi de l'instrument, il faut respecter impérativement ceci :
Tous les appareils livrés à WIKA doivent être exempts de toutes substances dangereuses (acides, solutions alcalines, solutions, etc.).

Pour retourner l'instrument, utiliser l'emballage original ou un emballage adapté pour le transport.

Pour éviter des dommages :
1. Emballer l'instrument dans une feuille de plastique antistatique.
2. Placer l'instrument avec le matériau isolant dans l'emballage. Isoler de manière uniforme tous les côtés de la caisse de transport.
3. Mettre si possible un sachet absorbeur d'humidité dans l'emballage.
4. Indiquer lors de l'envoi qu'il s'agit d'un instrument de mesure très sensible à transporter.

Des informations relatives à la procédure de retour de produit(s) défectueux sont disponibles sur notre site internet au chapitre “Services”.

8.3 Mise au rebut
Une mise au rebut inadéquate peut entraîner des dangers pour l'environnement. Éliminer les composants des instruments et les matériaux d'emballage conformément aux prescriptions nationales pour le traitement et l'élimination des déchets et aux lois de protection de l'environnement en vigueur.

12968065.06 06/2019 EN/DE/FR/ES

FR

9. Caractéristiques techniques

9. Caractéristiques techniques

Thermomètre bimétallique, type 55	
Elément de mesure	Hélice bimétallique
Diamètre	63, 100, 160
Version de l'instrument ■ Type A5x ■ Type R5x ■ Type S5x	 Situation de branchement en arrière (axial) Situation de branchement en bas (radial) Situation de branchement en arrière (axial), boîtier pivotant et orientable
Température ambiante admissible	-50 ... +60 °C
Champ d'application ■ Fonctionnement continu (1 an) ■ Temporaire (max. 24 h)	 Etendue de mesure (EN 13190) Etendue d'affichage (EN 13190)
Boîtier, anneau	Acier inox 304SS
Plongeur, raccord process	Acier inox 316SS
Type de protection	IP65 selon IEC/EN 60529 IP66, rempli de liquide

Pour les autres caractéristiques techniques, voir fiche technique WIKA TM 55.01 et les documents de commande.

12968065.06 06/2019 EN/DE/FR/ES

Contenido

1. Información general	64
2. Diseño y función	65
3. Seguridad	66
4. Transporte, embalaje y almacenamiento	71
5. Puesta en servicio, funcionamiento	73
6. Errores	76
7. Mantenimiento y limpieza	78
8. Desmontaje, devolución y eliminación de residuos	80
9. Datos técnicos	82

ES

12968065.06 06/2019 EN/DE/FR/ES

ES

1. Información general

1. Información general

- El termómetro bimetálico descrito en el manual de instrucciones está construidos y fabricados según el estado actual de la técnica. Todos los componentes están sujetos a criterios rígidos de calidad y medio ambiente durante la producción. Nuestros sistemas de gestión están certificados según ISO 9001 y ISO 14001.
- Este manual de instrucciones proporciona indicaciones importantes acerca del manejo del instrumento. Para un trabajo seguro, es imprescindible cumplir con todas las instrucciones de seguridad y manejo indicadas.
- Cumplir siempre las normativas sobre la prevención de accidentes y las normas de seguridad en vigor en el lugar de utilización del instrumento.
- El manual de instrucciones es una parte integrante del instrumento y debe guardarse en la proximidad del mismo para que el personal especializado pueda consultarlo en cualquier momento.
- El personal especializado debe haber leído y entendido el manual de instrucciones antes de comenzar cualquier trabajo.
- Se aplican las condiciones generales de venta incluidas en la documentación de venta.
- Modificaciones técnicas reservadas.
- Para obtener más informaciones consultar:
  - Página web: www.wika.es
  - Hoja técnica correspondiente: TM 55.01
  - Servicio técnico: Tel.: +34 933 9386-30
    Fax: +34 933 9386-66
    info@wika.es

12968065.06 06/2019 EN/DE/FR/ES

2. Diseño y función

2. Diseño y función

2.1 Resumen

① Caja
② Esfera
③ Aguja
④ Bulbo
⑤ Versión giratoria y orientable
⑥ Conexión a proceso

ES

12968065.06 06/2019 EN/DE/FR/ES

2. Diseño y función / 3. Seguridad

2.2 Descripción
El termómetro bimetálico de esta serie es adecuado para el uso en tubería, depósitos, instalaciones y máquinas.

El bulbo y la caja son de acero inoxidable.
Para optimizar la adaptación al proceso disponemos de varias longitudes y conexiones a proceso.

ES

La protección IP65 y el líquido de relleno permiten el uso también en aplicaciones con vibraciones.

2.3 Volumen de suministro
Comprobar mediante el albarán si se han entregado la totalidad de las piezas.

3. Seguridad

3.1 Explicación de símbolos

¡ADVERTENCIA!
... indica una situación probablemente peligrosa que pueda causar la muerte o lesiones graves si no se evita.

¡CUIDADO!
... indica una situación probablemente peligrosa que pueda causar lesiones leves o medianas o daños materiales y medioambientales si no se evita.

¡ADVERTENCIA!
... indica una situación probablemente peligrosa que pueda causar quemaduras debido a superficies o líquidos calientes si no se evita.

Información
... marca consejos y recomendaciones útiles así como informaciones para una utilización eficaz y libre de fallos.

12968065.06 06/2019 EN/DE/FR/ES

3. Seguridad

3.2 Uso conforme a lo previsto

Los termómetros bimetálicos se utilizan principalmente en la industria de procesos para supervisar la temperatura del proceso.

El termómetro bimetálico ha sido diseñado y construido únicamente para la finalidad aquí descrita y debe utilizarse en conformidad a la misma.

Cumplir las especificaciones técnicas de este manual de instrucciones. Un manejo no apropiado o una utilización del termómetro bimetálico no conforme a las especificaciones técnicas requiere la inmediata puesta fuera de servicio y la comprobación por parte de un técnico autorizado por WIKA.

No se admite ninguna reclamación debido a un manejo no adecuado.

ES

3.3 Uso incorrecto

¡ADVERTENCIA!
Lesiones por uso incorrecto
El uso incorrecto del dispositivo puede causar lesiones graves o la muerte.

- ▶ Abstenerse realizar modificaciones no autorizadas del dispositivo.
- ▶ No utilizar el dispositivo en zonas potencialmente explosivas.
- ▶ No utilizar el instrumento para medios abrasivos ni viscosos.

Cualquier uso que no sea el previsto para este dispositivo es considerado como uso incorrecto.

No utilizar este instrumento en sistemas de seguridad o dispositivos de parada de emergencia.

12968065.06 06/2019 EN/DE/FR/ES

3. Seguridad

3.4 Responsabilidad del usuario

El dispositivo se utiliza en el sector industrial. Por lo tanto, el usuario está sujeto a las responsabilidades legales para la seguridad en el trabajo.

Se debe cumplir las notas de seguridad en este manual de instrucciones, así como la validez de las normas de seguridad de la unidad, de prevención de accidentes y protección del medio ambiente.

ES

El usuario está obligado a mantener la placa de identificación bien legible.

Para realizar un trabajo seguro en el instrumento el propietario ha de asegurarse de que,

- esté disponible un kit de primeros auxilios que siempre esté presente y ayuda en caso necesario.
- los operadores reciban periódicamente instrucciones, sobre todos los temas referidos a seguridad de trabajo, primeros auxilios y protección del medio ambiente, y conozcan además el manual de instrucciones y en particular las instrucciones de seguridad del mismo.
- que el dispositivo es adecuado de acuerdo con el uso previsto para la aplicación.

3.5 Cualificación del personal

¡ADVERTENCIA!
¡Riesgo de lesiones debido a una insuficiente cualificación!
Un manejo no adecuado puede causar considerables daños personales y materiales.

- ▶ Las actividades descritas en este manual de instrucciones deben realizarse únicamente por personal especializado con la consiguiente cualificación.
- ▶ Mantener alejado a personal no cualificado de las zonas peligrosas.

12968065.06 06/2019 EN/DE/FR/ES

3. Seguridad

Personal especializado
Debido a su formación profesional, a sus conocimientos de la técnica de regulación y medición así como a su experiencia y su conocimiento de las normativas, normas y directivas vigentes en el país de utilización el personal especializado es capaz de ejecutar los trabajos descritos y reconocer posibles peligros por sí solo.

Algunas condiciones de uso específicas requieren conocimientos adicionales, p. ej. acerca de medios agresivos.

ES

3.6 Equipo de protección individual
El equipo de protección individual protege al personal especializado contra peligros que puedan perjudicar la seguridad y salud del mismo durante el trabajo. El personal especializado debe llevar un equipo de protección individual durante los trabajos diferentes en y con el instrumento.

¡Cumplir las indicaciones acerca del equipo de protección individual en el área de trabajo!

El usuario debe proporcionar el equipo de protección individual.

¡Llevar gafas protectoras!
Éstas protegen los ojos de piezas proyectadas y salpicaduras.

¡Llevar guantes de protección!
Protección de las manos contra rozamientos, abrasión, cortes o lesiones más profundas, así como el contacto con las superficies calientes y medios agresivos.

12968065.06 06/2019 EN/DE/FR/ES

ES

3. Seguridad

3.7 Rótulos, marcados de seguridad

Placa indicadora de modelo (example)

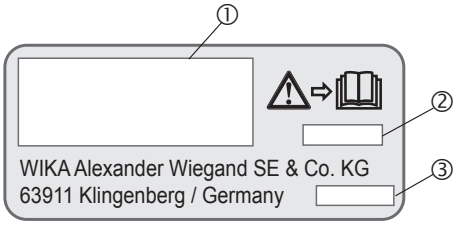

① Modelo
② Año de fabricación
③ Número de serie

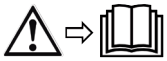

¡Es absolutamente necesario leer el manual de instrucciones antes del montaje y la puesta en servicio del instrumento!

No llenar posteriormente los instrumentos de líquido de relleno.

12968065.06 06/2019 EN/DE/FR/ES

4. Transporte, embalaje y almacenamiento

4. Transporte, embalaje y almacenamiento

4.1 Transporte

Comprobar si el instrumento presenta eventuales daños causados en el transporte. Notificar daños obvios de forma inmediata.

¡CUIDADO!
Daños debidos a un transporte inadecuado
Transportes inadecuados pueden causar daños materiales considerables.

- ▶ Tener cuidado al descargar los paquetes durante la entrega o el transporte dentro de la compañía y respetar los símbolos en el embalaje.
- ▶ Observar las instrucciones en el capítulo 4.2 “Packaging and storage” en el transporte dentro de la compañía.

ES

Si se transporta el instrumento de un ambiente frío a uno caliente, puede producirse un error de funcionamiento en el mismo. En tal caso, hay que esperar a que la temperatura del instrumento se adapte a la temperatura ambiente antes de ponerlo nuevamente en funcionamiento.

4.2 Embalaje y almacenamiento

No quitar el embalaje hasta justo antes del montaje.
Guardar el embalaje ya que es la protección ideal para el transporte (por ejemplo un cambio del lugar de instalación o un envío del instrumento para posibles reparaciones).

Condiciones admisibles en el lugar de almacenamiento:
Temperatura de almacenamiento: -20 ... +60 °C

Evitar lo siguiente:

- Luz solar directa o proximidad a objetos calientes
- Vibración mecánica, impacto mecánico (apoyarlo de golpe)
- Hollín, vapor, polvo y gases corrosivos
- Entorno potencialmente explosivo, atmósferas inflamables

12968065.06 06/2019 EN/DE/FR/ES

4. Transporte, embalaje y almacenamiento

Almacenar el instrumento en su embalaje original en un lugar que cumple las condiciones arriba mencionadas. Si no se dispone del embalaje original, empaquetar y almacenar el instrumento como sigue:

1. Envolver el instrumento en una lámina de plástico antiestática.
2. Colocar el instrumento junto con el material aislante en el embalaje.
3. Para un almacenamiento prolongado (más de 30 días) meter una bolsa con un secante en el embalaje.

ES

¡ADVERTENCIA!
Antes de almacenar el instrumento (después del funcionamiento), eliminar todos los restos de medios adherentes. Esto es especialmente importante cuando el medio es nocivo para la salud, como p. ej. cáustico, tóxico, cancerígeno, radioactivo, etc.

Con temperaturas alrededor del punto de condensación (±1 °C alrededor de 0 °C) se recomienda siempre el relleno de líquido.

12968065.06 06/2019 EN/DE/FR/ES

5. Puesta en servicio, funcionamiento

5. Puesta en servicio, funcionamiento

¡ADVERTENCIA!
Lesiones corporales, daños materiales y del medio ambiente causados por medios peligrosos
En caso de contacto con medios peligrosos (p. ej. oxígeno, acetileno, inflamables o tóxicos) medios nocivos para la salud (p. ej. corrosivas, tóxicas, cancerígenas radioactivas) y con sistemas de refrigeración o compresores existe el peligro de lesiones corporales, daños materiales y del medio ambiente.
En caso de fallo es posible que haya medios agresivos con temperaturas extremas o de bajo presión o que haya un vacío en el instrumento.

- ► Con estos medios deben observarse en cada caso, además de todas las reglas generales, las disposiciones pertinentes.

ES

¡ADVERTENCIA!
Lesiones por superficies o líquidos calientes
En el bulbo se encuentra el líquido de relleno que puede enturbiarse o cambiar de color y con una temperatura > de 250 °C puede provocar eventualmente un incendio.

- ► Hay que asegurarse que los instrumentos llenados no deben ser expuestos a una temperatura del medio superior a 250 °C.

Para atornillar el aparato, se debe utilizar la fuerza mediante el uso de herramientas adecuadas sobre las superficies planas de ajuste -previstas para este fin.

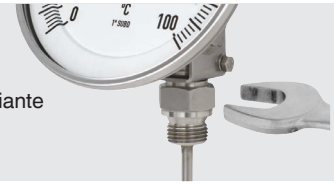

Montaje mediante llave de boca

12968065.06 06/2019 EN/DE/FR/ES

ES

5. Puesta en servicio, funcionamiento

Para la instalación de un termómetro bimetálico, de caja giratoria y orientable, hay que seguir instrucciones específicas. Para posicionar el indicador de forma deseada es imprescindible observar los siguientes pasos:

1. Soltar la contratuerca o la tuerca de unión en el racor de proceso.
2. Soltar tornillos hexagonales y de ranura en la articulación virable.

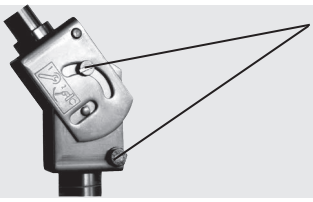

soltar

¡Asegurarse de soltar también los tornillos del lado opuesto!

3. Posicionar el indicador, apretar los tornillos hexagonales y de ranura y finalmente apretar firmemente la contratuerca o la tuerca de unión.

12968065.06 06/2019 EN/DE/FR/ES

5. Puesta en servicio, funcionamiento

5.1 Utilización de vainas

¡CUIDADO!
Daños debido a manipulación errónea
Si se utilizan vainas, hay que asegurarse de que el bulbo no tenga contacto con el fondo de la vaina porque los diferentes coeficientes de dilatación de los materiales pueden causar la deformación del bulbo en el fondo de la vaina.

- Emplear una longitud de montaje adecuada (Fórmula para calcular la longitud de montaje l_1, véase la correspondiente hoja técnica de la vaina).

ES

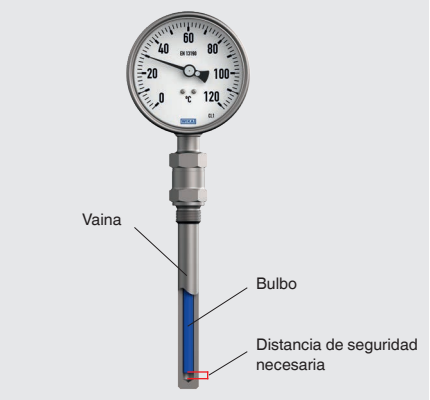

12968065.06 06/2019 EN/DE/FR/ES

5. Puesta en servicio, funcionamiento / 6. Errores

5.2 Agentes de contacto térmico
Si se utilizan vainas, reducir la resistencia de transferencia de calor entre la pared exterior del sensor y la pared interior de la vaina llenando ésta con un agente de contacto. La temperatura de trabajo de la pasta térmica está entre -40 ... +200 °C.

ES

¡ADVERTENCIA!
Lesiones corporales y daños materiales debido a salpicaduras de aceite
Al cargar un agente de contacto térmico en vainas calientes, existe el peligro de lesiones corporales y daños materiales debido a salpicaduras de aceite.
- ► No llenar en vainas calientes

6. Errores

¡CUIDADO!
Lesiones corporales, daños materiales y del medio ambiente
Si no se pueden solucionar los defectos mencionados se debe poner el dispositivo inmediatamente fuera de servicio.
- ► Asegurar que el dispositivo no queda expuesto a presión o una señal y protegerlo contra usos accidentales.
- ► Contactar con el fabricante.
- ► En caso de devolución, observar las indicaciones del capítulo 8.2 “Devolución”.

12968065.06 06/2019 EN/DE/FR/ES

6. Errores

¡ADVERTENCIA!
Lesiones corporales, daños materiales y del medio ambiente causados por medios peligrosos
En caso de contacto con medios peligrosos (p. ej. oxígeno, acetileno, inflamables o tóxicos) medios nocivos para la salud (p. ej. corrosivas, tóxicas, cancerígenas radioactivas) y con sistemas de refrigeración o compresores existe el peligro de lesiones corporales, daños materiales y del medio ambiente.
En caso de fallo es posible que haya medios agresivos con temperaturas extremas o de bajo presión o que haya un vacío en el instrumento.

- Con estos medios deben observarse en cada caso, además de todas las reglas generales, las disposiciones pertinentes.

ES

Datos de contacto véase el capítulo 1 “Información general” o parte posterior del manual de instrucciones.

Errores	Causas	Medidas
La aguja no se mueve con temperatura en ascenso	Rotura del bimetal debido a cualquier vibración	Desmontar el instrumento y reemplazarlo
No hay legibilidad debido a la mirilla empañada/helada	Uso con temperaturas inferiores al punto de congelación	En tal caso, hay que esperar a que la temperatura del instrumento se adapte a la temperatura ambiente.
	No hay líquido de relleno en la caja	Reemplazar por un termómetro con líquido de relleno
Aguja caída	Carga excesiva de vibraciones o impactos	Reemplazar el instrumento de medición por un termómetro con relleno

12968065.06 06/2019 EN/DE/FR/ES

ES

6. Errores / 7. Mantenimiento y limpieza

Errores	Causas	Medidas
Instrumento relleno con fugas en la zona del tapón de carga	Temperatura ambiente inferior a -40 °C	Reemplazarlo por un instrumento para temperatura ambiente de hasta -50 °C
Burbujas en la mirilla (cristal de seguridad de varias capas)	Temperatura ambiente demasiado elevada	Aislarlo contra el calor radiante
El aparato no se puede enroscar en la vaina	Rosca equivocada, diámetro o longitud de la vaina demasiado grande	Reemplazar el termómetro o la vaina
La esfera se decolora	Temperatura ambiente demasiado elevada	Aislarlo contra el calor radiante
Mirilla rajada	Eventualmente el termómetro se apretó demasiado a la caja	Reemplazar el instrumento

7. Mantenimiento y limpieza

Datos de contacto véase el capítulo 1 “Información general” o parte posterior del manual de instrucciones.

7.1 Mantenimiento

¡Los termómetros bimetálicos no necesitan mantenimiento!
Controlar el instrumento y la función de conmutación una o dos veces al año. Para eso, separar el instrumento del proceso y controlarlo con un dispositivo de calibración de temperatura.

Todas las reparaciones las debe efectuar únicamente el fabricante.

12968065.06 06/2019 EN/DE/FR/ES

7. Mantenimiento y limpieza

7.2 Limpieza

¡CUIDADO!
Lesiones corporales, daños materiales y del medio ambiente
Una limpieza inadecuada provoca lesiones corporales, daños materiales y del medio ambiente. Medios residuales en el instrumento desmontado pueden causar riesgos para personas, medio ambiente e instalación.
- ▶ Realizar el proceso de limpieza tal como se describe a continuación.

ES

1. Antes de limpiar desconectar el instrumento de la red.
2. Utilizar el equipo de protección necesario.
3. Limpiar el instrumento con un trapo húmedo.

¡CUIDADO!
Daño al dispositivo
¡Una limpieza inadecuada puede dañar el dispositivo!
- ▶ No utilizar productos de limpieza agresivos.
- ▶ No utilizar ningún objeto puntiagudo o duro para la limpieza.

4. Enjuagar y limpiar el dispositivo desmontado para proteger a las personas y el medio ambiente contra peligros por medios residuales adherentes.

12968065.06 06/2019 EN/DE/FR/ES

8. Desmontaje, devolución y eliminación de residuos

ES

¡ADVERTENCIA!
Lesiones corporales, daños materiales y del medio ambiente por medios residuales
Medios residuales en el instrumento desmontado pueden causar riesgos para personas, medio ambiente e instalación.

- ▶ Observar la ficha de datos de seguridad correspondiente al medio.
- ▶ Enjuagar y limpiar el dispositivo desmontado para proteger a las personas y el medio ambiente contra peligros por medios residuales adherentes.

8.1 Desmontaje

¡ADVERTENCIA!
¡Riesgo de quemaduras!
¡Dejar enfriar el instrumento lo suficiente antes de desmontarlo! Peligro debido a medios muy calientes que se escapan durante el desmontaje.

¡PELIGRO!
Peligro de muerte por corriente eléctrica
Existe peligro directo de muerte al tocar piezas bajo tensión.

- ▶ El desmontaje del instrumento solo puede ser realizado por personal especializado.
- ▶ Desmontar el termómetro solo en estado de desconexión de la red.

12968065.06 06/2019 EN/DE/FR/ES

8. Desmontaje, devolución y eliminación de ...

¡ADVERTENCIA!
Lesión corporal
Al desmontar existe el peligro debido a los medios agresivos y altas presiones.
- ▶ Observar la ficha de datos de seguridad correspondiente al medio.
- ▶ Desmontar el termómetro solo en estado despresurizado.

ES

8.2 Devolución

Es imprescindible observar lo siguiente para el envío del instrumento:
Todos los instrumentos enviados a WIKA deben estar libres de sustancias peligrosas (ácidos, lejías, soluciones, etc.).

Utilizar el embalaje original o un embalaje adecuado para la devolución del instrumento.

Para evitar daños:
1. Envolver el instrumento en una lámina de plástico antiestática.
2. Colocar el instrumento junto con el material aislante en el embalaje. Aislar uniformemente todos los lados del embalaje de transporte.
3. Si es posible, adjuntar una bolsa con secante.
4. Aplicar un marcado de que se trata del envío de un instrumento de medición altamente sensible.

Comentarios sobre el procedimiento de las devoluciones encuentra en el apartado “Servicio” en nuestra página web local.

8.3 Eliminación de residuos
Una eliminación incorrecta puede provocar peligros para el medio ambiente. Eliminar los componentes de los instrumentos y los materiales de embalaje conforme a los reglamentos relativos al tratamiento de residuos y eliminación vigentes en el país de utilización.

12968065.06 06/2019 EN/DE/FR/ES

ES

9. Datos técnicos

9. Datos técnicos

Termómetro bimetálico, modelo 55	
Elemento de medición	Espiral bimetálico
Diámetro nominal	63, 100, 160
Construcción del aparato ■ Modelo A5x ■ Modelo R5x ■ Modelo S5x	 Conexión dorsal (axial) Conexión inferior (radial) Conexión dorsal, caja giratoria y orientable
Temperatura ambiente admisible	-50 ... +60 °C
Rango de servicio ■ Carga a largo plazo (1 año) ■ A corto plazo (máx. 24 h)	 Rango de medida (EN 13190) Rango de indicación (EN 13190)
Caja, anillo	Acero inoxidable 304SS
Bulbo, conexión a proceso	Acero inoxidable 316SS
Tipo de protección	IP65 según IEC/EN 60529 IP66, lleno de líquido

Para más datos técnicos véase las hojas técnicas TM 55.01 y la documentación de pedido.

12968065.06 06/2019 EN/DE/FR/ES

12968065.06 06/2019 EN/DE/FR/ES

WIKA subsidiaries worldwide can be found online at www.wika.com.
WIKA-Niederlassungen weltweit finden Sie online unter www.wika.de.
La liste des filiales WIKA dans le monde se trouve sur www.wika.fr.
Sucursales WIKA en todo el mundo puede encontrar en www.wika.es.

WIKA Alexander Wiegand SE & Co. KG
Alexander-Wiegand-Straße 30
63911 Klingenberg • Germany
Tel. +49 9372 132-0
Fax +49 9372 132-406
info@wika.de
www.wika.de

12968065.06 06/2019 EN/DE/FR/ES

A.8.2 Data sheets

Temperature

Bimetal thermometer
For the process industry per EN 13190, premium version
Model 55

WIKA data sheet TM 55.01

for further approvals
see page 7

Applications

- General process instrumentation in the chemical and petrochemical industries, oil and gas industries, energy and water/wastewater industries
- Temperature measurement in harsh and aggressive environments

Special features

- Scale ranges from -70 ... +600 °C
- For extreme ambient temperatures
- Maintenance-friendly bayonet case
- All stainless steel construction
- Individual stem length from 63 ... 1,000 mm

Fig. left: Bimetal thermometer, model R5502
Fig. right: Bimetal thermometer, adjustable stem and dial, model S5550

Description

The model 55 bimetal thermometer has been developed and is manufactured in accordance with the EN 13190 standard. The high-quality thermometer has been designed especially for the requirements of the process industry. Especially in the chemical and petrochemical, oil and gas, and power engineering industries, the temperature measuring instrument completely manufactured from stainless steel is used successfully.

The model 55 satisfies the high requirements for resistance against aggressive media. As an option, the case can be made from 316L to fulfil the highest requirements.

To allow optimum fitting to the process, individual insertion lengths and different process connections can be selected.

When it comes to harsh climatic conditions at the place of use, the model 55 is the right choice, as it can be used at temperatures ranging from -40 °C to +70 °C (optional also up to -50 °C or -70 °C).

WIKA Part of your business

Specifications

Bimetal thermometer, model 55	
Measuring element	Bimetal coil
Nominal size in mm	■ 63 ■ 100 ■ 160
Connection location	■ A5525 NS 63 Back mount (axial) ■ A5500 NS 100 Back mount (axial) ■ A5501 NS 160 Back mount (axial) ■ R5526 NS 63 Lower mount (radial) ■ R5502 NS 100 Lower mount (radial) ■ R5503 NS 160 Lower mount (radial) ■ S5550 NS 100 Back mount, adjustable stem and dial ■ S5551 NS 160 Back mount, adjustable stem and dial
Connection design	■ S, standard (male threaded connection) ■ 1, plain stem (without thread) ■ 2, male nut ■ 3, union nut ■ 4, compression fitting (sliding on stem) ■ 5, union nut and loose threaded connection
Unit (scale range)	°C Option: ■ °F ■ °C/°F (dual scale) ■ °F/°C (dual scale)
Process connection	■ Plain, without thread ■ G ½ B ■ ½ NPT ■ G ½ female ■ ½ NPT female ■ M20 x 1.5 ■ M24 x 1.5 female others on request
Accuracy class	Class 1 per EN 13190
Working range	
Continuous load (1 year)	Measuring range (EN 13190)
Short time (max. 24 h)	Scale range (EN 13190)
Stem diameter	8 mm Option: ■ 6 mm ■ 10 mm ■ 12 mm
Insertion length L_1	63 ... 1,000 mm Minimum/maximum length is dependent on the measuring range and diameter (see tables from page 4)
Window	Instrument glass NS 63: window from polycarbonate Option: Laminated safety glass, clear non-splintering plastic
Zero adjustment (option)	On case back side, external only for adjustable stem and dial
Damping	Without Option: With silicone oil case filling, up to max. 250 °C (at the probe)
Wetted materials	
Stem, process connection	Stainless steel 316SS
Non-wetted materials	
Case, bayonet ring	Stainless steel 304SS (option: stainless steel 316L)
Dial	Aluminium white, black lettering
Pointer	Aluminium, black, micro adjustable pointer

Bimetal thermometer, model 55	
Ingress protection per IEC/EN 60529	IP65 Option: ■ IP66 ■ IP67
Permissible temperatures	
Ambient (at the case)	-40 ... +70 °C (with/without filling liquid) Option: ■ -50 ... +70 °C ■ -70 ... +60 °C
Storage and transport	-50 … +70 °C
Permissible operating pressure at the stem	max. 25 bar, static

Scale and measuring ranges [1] (EN 13190)

Scale graduation per WIKA standard

Scale range in °C	Measuring range [1] in °C	Scale spacing in °C
-70 ... +70	-50 ... +50	2
-70 ... +30	-60 ... +20	1
-50 ... +50	-40 ... +40	1
-50 ... +100	-30 ... +80	2
-50 ... +300	0 ... 250	5
-50 ... +500	0 ... 450	5
-40 ... +60	-30 ... +50	1
-40 ... +80	-20 ... +60	2
-40 ... +160	-20 ... +140	2
-30 ... +50	-20 ... +40	1
-30 ... +70	-20 ... +60	1
-20 ... +60	-10 ... +50	1
-20 ... +80	-10 ... +70	1
-20 ... +100	0 ... 80	2
-20 ... +120	0 ... 100	2
-20 ... +140	0 ... 120	2
-10 ... +50	0 ... 40	1
0 ... 60	10 ... 50	1
0 ... 80	10 ... 70	1
0 ... 100	10 ... 90	1
0 ... 120	10 ... 110	2
0 ... 150	20 ... 130	2
0 ... 160	20 ... 140	2
0 ... 200	20 ... 180	2
0 ... 250	30 ... 220	2
0 ... 300	30 ... 270	5
0 ... 400	50 ... 350	5
0 ... 500	50 ... 450	5
0 ... 600	100 ... 500	5

Scale range in °F	Measuring range [1] in °F	Scale spacing in °F
-80 ... +120	-40 ... +100	2
-80 ... +240	-50 ... +210	2
-20 ... +120	0 ... 100	2
0 ... 200	20 ... 180	2
0 ... 250	30 ... 220	2
30 ... 300	60 ... 270	5
30 ... 400	80 ... 350	5
50 ... 300	80 ... 270	5
50 ... 400	100 ... 350	5
100 ... 800	200 ... 700	5
200 ... 700	250 ... 650	5
200 ... 1.000	300 ... 900	5

1) The measuring range is indicated on the dial by two triangular marks.
Only within this range is the stated error limit valid per EN 13190.

Minimum insertion lengths in mm

■ **Model A55 (back mount)**

Scale range in °C

Design	1 and 2			3, 4, 5 and S		
Stem diameter in mm	6	8	≥ 10	6	8	≥ 10
Scale range in °C						
-70 ... +70	63	63	63	69	63	64
-70 ... +30	63	63	63	82	69	73
-50 ... +50	63	63	63	80	68	73
-50 ... +100	63	63	63	69	63	63
-50 ... +200	63	63	63	78	69	67
-50 ... +300	119	119	119	119	119	119
-50 ... +400	119	119	119	119	119	119
-50 ... +500	119	119	119	119	119	119
-40 ... +40	79	65	63	98	79	79
-40 ... +60	65	63	63	79	72	73
-40 ... +80	63	63	63	80	68	69
-40 ... +160	63	63	63	67	63	63
-30 ... +30	90	72	80	109	91	99
-30 ... +50	69	63	63	88	75	81
-30 ... +70	65	63	63	79	72	71
-20 ... +40	88	70	80	107	89	99
-20 ... +60	68	63	63	87	74	78
-20 ... +80	63	63	63	78	66	68
-20 ... +100	63	63	63	71	63	66
-20 ... +120	63	63	63	67	63	63
-20 ... +140	63	63	63	66	63	63
-10 ... +50	88	70	80	107	89	89
0 ... 60	77	70	80	96	89	89
0 ... 80	68	63	63	87	74	78
0 ... 100	63	63	63	72	63	67
0 ... 120	63	63	63	69	63	64
0 ... 150	63	63	63	66	63	63
0 ... 160	63	63	63	63	63	63
0 ... 200	63	63	63	63	63	63
0 ... 250	63	63	63	73	69	68
0 ... 300	119	119	119	119	119	119
0 ... 400	119	119	119	119	119	119
0 ... 500	119	119	119	119	119	119
0 ... 600	119	119	119	119	119	119

Scale range in °F

Design	1 and 2			3, 4, 5 and S		
Stem diameter in mm	6	8	≥ 10	6	8	≥ 10
Scale range in °F						
-100 ... +150	68	63	63	87	76	69
-80 ... +120	63	63	63	82	69	81
-80 ... +240	63	63	63	81	71	67
-40 ... +120	75	63	63	94	81	75
-20 ... +120	71	63	65	90	75	79
0 ... 140	68	63	63	87	74	78
0 ... 200	63	63	63	72	63	69
0 ... 250	63	63	63	66	63	69
30 ... 300	63	63	63	66	63	63
30 ... 400	63	63	63	63	63	63
50 ... 300	63	63	63	65	63	63
50 ... 400	63	63	63	63	63	63
100 ... 800	119	119	119	119	119	119
150 ... 750	119	119	119	119	119	119
200 ... 700	119	119	119	119	119	119
200 ... 1.000	119	119	119	119	119	119

■ **Model R55 (lower mount)**

Scale range in °C

Design	1 and 2			3, 4, 5 and S		
Stem diameter in mm	6	8	≥ 10	6	8	≥ 10
Scale range in °C						
-70 ... +70	63	63	63	79	68	65
-70 ... +30	68	63	63	87	69	75
-50 ... +50	63	63	63	82	72	72
-50 ... +100	63	63	63	73	64	63
-50 ... +200	63	63	63	69	63	63
-50 ... +300	119	119	119	119	119	119
-50 ... +400	119	119	119	119	119	119
-50 ... +500	119	119	119	119	119	119
-40 ... +40	72	63	63	91	82	75
-40 ... +60	63	63	63	81	71	71
-40 ... +80	63	63	63	78	69	69
-40 ... +160	63	63	63	75	64	64
-30 ... +30	87	72	72	106	91	91
-30 ... +50	68	63	63	87	75	75
-30 ... +70	63	63	63	81	71	71
-20 ... +40	85	68	68	104	87	87
-20 ... +60	67	63	63	87	74	74
-20 ... +80	63	63	63	78	67	67
-20 ... +100	63	63	63	74	65	65
-20 ... +120	63	63	63	73	64	64
-20 ... +140	63	63	63	74	64	67
-10 ... +50	85	68	68	104	87	87
0 ... 60	77	67	67	96	86	86
0 ... 80	67	63	63	86	74	74
0 ... 100	63	63	63	78	67	67
0 ... 120	63	63	63	73	65	65
0 ... 150	63	63	63	73	64	64
0 ... 160	63	63	63	74	67	67
0 ... 200	63	63	63	73	63	63
0 ... 250	63	63	63	82	72	72
0 ... 300	119	119	119	119	119	119
0 ... 400	119	119	119	119	119	119
0 ... 500	119	119	119	119	119	119
0 ... 600	119	119	119	119	119	119

Scale range in °F

Design	1 and 2			3, 4, 5 and S		
Stem diameter in mm	6	8	≥ 10	6	8	≥ 10
Scale range in °F						
-100 ... +150	75	63	63	94	80	80
-80 ... +120	68	63	63	87	75	75
-80 ... +240	63	63	63	81	71	71
-40 ... +120	71	63	63	90	79	79
-20 ... +120	69	63	63	88	76	74
0 ... 140	67	63	63	86	74	74
0 ... 200	63	63	63	75	66	66
0 ... 250	63	63	63	74	65	65
30 ... 300	63	63	63	74	66	66
30 ... 400	63	63	63	73	63	63
50 ... 300	63	63	63	74	64	64
50 ... 400	63	63	63	75	63	63
100 ... 800	119	119	119	119	119	119
150 ... 750	119	119	119	119	119	119
200 ... 700	119	119	119	119	119	119
200 ... 1.000	119	119	119	119	119	119

■ **Model S55 (back mount, adjustable stem and dial)**

Scale range in °C

Design	1 and 2			3, 4, 5 and S		
Stem diameter in mm	6	8	≥ 10	6	8	≥ 10
Scale range in °C						
-70 ... +70	63	63	63	78	67	63
-70 ... +30	75	63	63	94	80	80
-50 ... +50	67	63	63	86	78	78
-50 ... +100	66	63	63	85	76	68
-50 ... +200	67	63	63	86	78	67
-50 ... +300	119	119	119	119	119	119
-50 ... +400	119	119	119	119	119	119
-50 ... +500	119	119	119	119	119	119
-40 ... +40	90	74	63	109	93	74
-40 ... +60	67	63	63	86	78	78
-40 ... +80	63	63	63	80	70	70
-40 ... +160	63	63	63	67	63	63
-30 ... +30	101	77	77	120	96	96
-30 ... +50	78	66	66	96	85	85
-30 ... +70	72	63	63	91	80	80
-20 ... +40	99	80	80	118	99	99
-20 ... +60	77	65	65	96	79	79
-20 ... +80	66	63	63	85	74	74
-20 ... +100	63	63	63	76	68	68
-20 ... +120	63	63	63	73	66	66
-20 ... +140	63	63	63	71	64	64
-10 ... +50	99	80	80	118	99	99
0 ... 60	94	75	74	113	94	94
0 ... 80	77	65	65	96	79	79
0 ... 100	63	63	63	82	73	73
0 ... 120	63	63	63	75	67	67
0 ... 150	63	63	63	71	64	64
0 ... 160	63	63	63	66	63	63
0 ... 200	63	63	63	63	63	63
0 ... 250	66	63	63	85	73	73
0 ... 300	119	119	119	119	119	119
0 ... 400	119	119	119	119	119	119
0 ... 500	119	119	119	119	119	119
0 ... 600	119	119	119	119	119	119

Scale range in °F

Design	1 and 2			3, 4, 5 and S		
Stem diameter in mm	6	8	≥ 10	6	8	≥ 10
Scale range in °F						
-100 ... +150	71	63	63	90	80	74
-80 ... +120	81	66	66	100	85	85
-80 ... +240	63	63	63	81	71	71
-40 ... +120	85	72	66	104	91	85
-20 ... +120	74	63	65	93	75	79
0 ... 140	77	65	65	96	79	79
0 ... 200	63	63	63	73	65	69
0 ... 250	63	63	63	72	64	64
30 ... 300	63	63	63	73	65	65
30 ... 400	63	63	63	64	63	63
50 ... 300	63	63	63	74	66	66
50 ... 400	63	63	63	65	63	63
100 ... 800	119	119	119	119	119	119
150 ... 750	119	119	119	119	119	119
200 ... 700	119	119	119	119	119	119
200 ... 1.000	119	119	119	119	119	119

Approvals

Logo	Description	Country
	EU declaration of conformity ATEX directive (option) Hazardous areas	European Union
	EAC (option) ■ Electromagnetic compatibility ■ Low voltage directive ■ Hazardous areas	Eurasian Economic Community
	GOST (option) Metrology, measurement technology	Russia
	KazInMetr (option) Metrology, measurement technology	Kazakhstan
-	**MTSCHS (option)** Permission for commissioning	Kazakhstan
	BelGIM (option) Metrology, measurement technology	Belarus
	UkrSEPRO (Option) Metrology, measurement technology	Ukraine
	Uzstandard (option) Metrology, measurement technology	Uzbekistan
-	**CRN (option)** Safety (e.g. electr. safety, overpressure, ...)	Canada

Certificates (options)

- 2.2 test report
- 3.1 inspection certificate
- DKD/DAkkS calibration certificate

Approvals and certificates, see website

Connection designs

Standard design (male threaded connection)

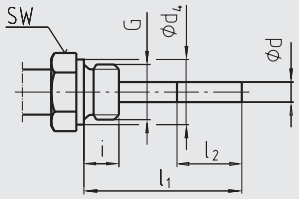

Connection, male: G ½ B, G ¾ B, ½ NPT, ¾ NPT
Standard insertion length l_1 = 63, 100, 160, 200, 250 mm

Nominal size	Process connection		Dimensions in mm		
NS	G	i	SW	d_4	Ø d
63, 100, 160	G ½ B	14	27	26	8
	G ¾ B	16	32	32	8
	½ NPT	19	22	-	8
	¾ NPT	20	30	-	8

Design 1, plain stem (without thread)

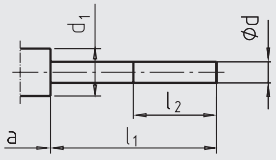

Standard insertion length l_1 = 140, 200, 240, 290 mm
Basis for design 4, compression fitting

Nominal size	Dimensions in mm			
NS	d_1	Ød	a for axial	a for adjustable stem and dial
63	14	8	15	25
100, 160	18	8	15	25

Design 2, male nut

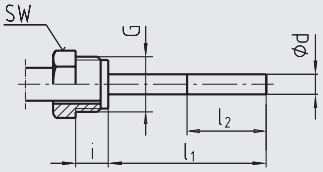

Standard insertion length l_1 = 80, 140, 180, 230 mm
Non-sealed process connection, thus use with thermowell.

Nominal size	Process connection		Dimensions in mm	
NS	G	i	SW	Ø d
63, 100, 160	G ½ B	20	27	8

Design 3, union nut

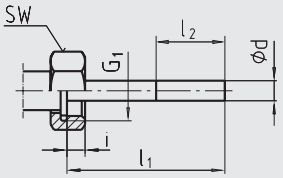

Standard insertion length l_1 = 89, 126, 186, 226, 276 mm

Nominal size	Process connection		Dimensions in mm	
NS	G	i	SW	Ø d
63, 100, 160	G ½ B	8.5	27	8
	G ¾ B	10.5	32	8
	M24 x 1.5	13.5	32	8

Design 4, compression fitting (sliding on stem)

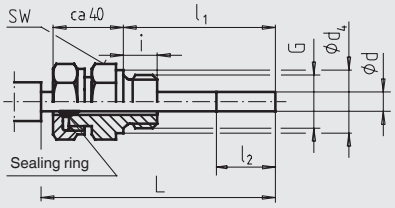

Standard insertion length l1 = 63, 100, 160, 200, 250 mm
Length L = l_1 + 40 mm

Nominal size	Process connection		Dimensions in mm		
NS	G	i	SW	d_4	Ø d
63, 100, 160	G ½ B	14	27	26	8
	G ¾ B	16	32	32	8
	M18 x 1.5	12	24	23	8
	½ NPT	19	22	-	8
	¾ NPT	20	30	-	8

Design 5, union nut and loose threaded connection

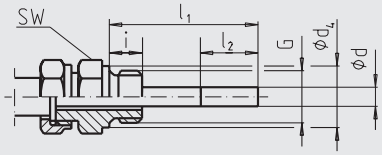

G ½ B, G ¾ B, M18 x 1.5 and ½ NPT, ¾ NPT
Minimum immersion depth l_{min} approx. 60 mm
Insertion length l_1 = variable
Length L = l_1 + 40 mm
Stainless steel 1.4571

Nominal size	Process connection		Dimensions in mm		
NS	G	i	SW	d_4	Ø d
63, 100, 160	G ½ B	14	27	26	8
	G ¾ B	16	32	32	8
	M18 x 1.5	12	24	23	8
	½ NPT	19	22	-	8
	¾ NPT	20	30	-	8

Legend:

G	Male thread
G_1	Female thread
i	Thread length (incl. collar)
a	Distance to the case/articulated joint
Ø d_4	Diameter of the sealing collar
SW	Spanner width
Ø d	Stem diameter
l_1	Insertion length
l_2	Active length

Dimensions in mm

Back mount (BM)

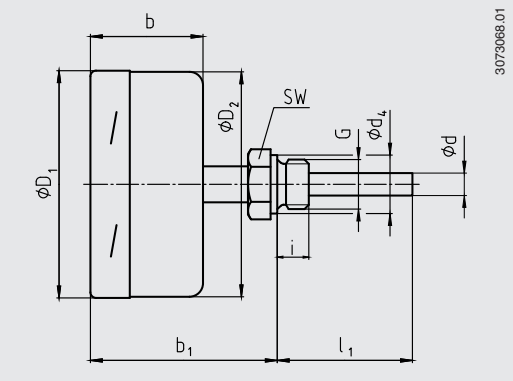

Lower mount (LM)

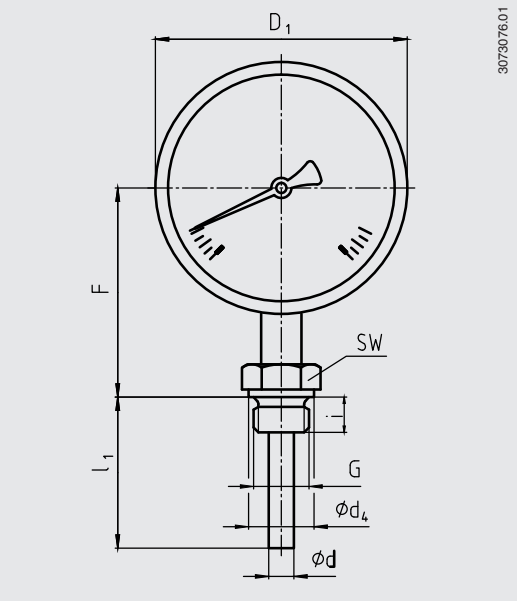

NS	Dimensions in mm									Weight in kg	
	b	b_1 1)	d 2)	d_4	Ø D_1	Ø D_2	F 1)	G	SW	Model A55xx	Model R55xx
63	35	60	8	26	64	62	57	G ½ B	27	0.25	0.25
100	50	83	8	26	101	99	83	G ½ B	27	0.8	0.8
160	50	83	8	26	161	159	113	G ½ B	27	1.1	1.1

1) With scale ranges ≥ 0 ... 300 °C the dimensions increase by 40 mm
2) Option: stem Ø 6, 10, 12 mm

Adjustable stem and dial version

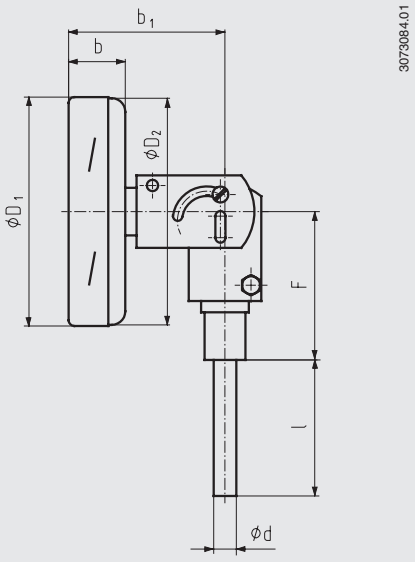

NS	Dimensions in mm						Weight in kg
	b	b_1	d [1]	Ø D_1	Ø D_2	F	Model S55xx
100	25	68	8	101	99	68	0.5
160	25	68	8	161	159	68	0.7

1) Option: stem Ø 6, 10, 12 mm

Thermowell

In principle, the operation of a mechanical thermometer without a thermowell with low process-side loading (low pressure, low viscosity and low flow velocities) is possible.

However, in order to enable exchanging the thermometer during operation (e.g. instrument replacement or calibration) and to ensure a better protection of the instrument and also the plant and the environment, it is advisable to use a thermowell from the extensive WIKA thermowell portfolio.

For further information on the calculation of the thermowell, see Technical information IN 00.15.

Ordering information
Model / Nominal size / Scale range / Connection size / Connection location / Options

© 04/2008 WIKA Alexander Wiegand SE & Co. KG, all rights reserved.
The specifications given in this document represent the state of engineering at the time of publishing.
We reserve the right to make modifications to the specifications and materials.

WIKA Alexander Wiegand SE & Co. KG
Alexander-Wiegand-Straße 30
63911 Klingenberg/Germany
Tel. +49 9372 132-0
Fax +49 9372 132-406
info@wika.de
www.wika.de

A.8.3 Declaration of Conformity

WIKA

EU-Konformitätserklärung
EU Declaration of Conformity

Dokument Nr.:
Document No.: 11603046.02

Wir erklären in alleiniger Verantwortung, dass die mit CE gekennzeichneten Produkte
We declare under our sole responsibility that the CE marked products

Typenbezeichnung:
Type Designation:

Model 53:
A5300 + option ATEX / A5301+ option ATEX / S5300 + option ATEX / S5301 + option ATEX
Model 54:
A5400 + option ATEX / A5401 + option ATEX / A5402 + option ATEX / A5403 + option ATEX / R5440 + option ATEX / R5441 + option ATEX / R5442 + option ATEX / R5443 + option ATEX / S5410 + option ATEX / S5411 + option ATEX / S5412 + option ATEX / S5413+ option ATEX
Model 55:
A5525 + option ATEX / A5500 + option ATEX / A5501 + option ATEX / R5526 + option ATEX / R5502 + option ATEX / R5503 + option ATEX / S5550 + option ATEX / S5551+ option ATEX

Beschreibung: **Bimetall-Thermometer**
Description: ***Bimetal thermometer***

gemäß gültigem Datenblatt: TM53.01
according to the valid data sheet: TM54.01
TM55.01

die grundlegenden Schutzanforderungen der folgenden Richtlinien erfüllen:
comply with the essential protection requirements of the directives:

2014/34/EU Explosionsschutz (ATEX) (1)
2014/34/EU Explosion protection (ATEX) (1)

Ex II 2 GD c TX X

alternativ
alternative

Ex II 2 G c TX X
Ex II 2 D c TX X

Harmonisierte Normen:
Harmonized standards:

EN 1127-1 :2011
EN 13463-1:2009
EN 13463-5:2011

(1) Konformitätsbewertungsverfahren „interne Fertigungskontrolle". Die Dokumentation ist hinterlegt bei benannter Stelle TÜV NORD CERT GmbH, Essen (Nr. 0044), Aktennummer 8000550764.
Conformity assessment procedure "Internal Control of Production". The Documentation is deposited at notified body TÜV NORD CERT GmbH, Essen (no. 0044), reference number 8000550764.

Unterzeichnet für und im Namen von / *Signed for and on behalf of*

WIKA Alexander Wiegand SE & Co. KG

Klingenberg, 2016-09-29

Thorsten Seefried, Vice President
Process Gauges

Michael Glombitza, Head of Quality Management
Process Gauges

WIKA Alexander Wiegand SE & Co. KG
Alexander-Wiegand-Straße 30
63911 Klingenberg
Germany

Tel. +49 9372 132-0
Fax +49 9372 132-406
E-Mail info@wika.de
www.wika.de

Kommanditgesellschaft: Sitz Klingenberg – Amtsgericht Aschaffenburg HRA 1819
Komplementärin: WIKA Verwaltungs SE & Co. KG – Sitz Klingenberg – Amtsgericht Aschaffenburg HRA 4685

Komplementärin:
WIKA International SE - Sitz Klingenberg - Amtsgericht Aschaffenburg HRB 10505
Vorstand: Alexander Wiegand
Vorsitzender des Aufsichtsrats: Dr. Max Egli

WIKA

Déclaration de Conformité UE
Declaración de Conformidad UE

Document No.:
Documento Nº: 11603046.02

Nous déclarons sous notre seule responsabilité que les appareils marqués CE
Declaramos bajo nuestra sola responsabilidad, que los equipos marcados CE

Type:
Modelo:

Model 53:
A5300 + option ATEX / A5301+ option ATEX / S5300 + option ATEX / S5301 + option ATEX
Model 54:
A5400 + option ATEX / A5401 + option ATEX / A5402 + option ATEX / A5403 + option ATEX /
R5440 + option ATEX / R5441 + option ATEX / R5442 + option ATEX / R5443 + option ATEX / S5410 + option ATEX / S5411 + option ATEX / S5412 + option ATEX / S5413+ option ATEX
Model 55:
A5525 + option ATEX / A5500 + option ATEX / A5501 + option ATEX / R5526 + option ATEX / R5502 + option ATEX / R5503 + option ATEX / S5550 + option ATEX / S5551+ option ATEX

Description:
Descripción:

Thermomètre bimétallique
Termómetro bimetálico

selon fiche technique valide:
según ficha técnica en vigor:

TM53.01
TM54.01
TM55.01

conformes aux exigences essentielles de sécurité de la (les) directive(s):
cumplen con los requerimientos esenciales de seguridad de las Directivas:

2014/34/UE Protection contre l'explosion (ATEX) (1)
2014/34/UE Protección contra explosión (ATEX) (1)

Normes appliquées et harmonisées
Normas aplicadas y armonizadas

EN 1127-1 :2011
EN 13463-1:2009
EN 13463-5:2011

Ex II 2 GD c TX X

alternative
alternativa

Ex II 2 G c TX X

Ex II 2 D c TX X

(1) Procédures d'évaluation de la conformité "Contrôle Interne de Fabrication". Documentation déposée à l'organisme notifié TÜV Nord CERT GmbH, D-45141 Essen (reg. no. 0044), numéro de de référence 8000550764.
Precedimiento de evaluación de la conformidad "Control Interno de la Fabricación". Documentación notificada al organismo TÜV Nord CERT GmbH, D-45141 Essen (reg. no. 0044), numero de expediente 8000550764.

Signé a l'intention et au nom de / *Firmado en nombre y por cuenta de*

WIKA Alexander Wiegand SE & Co. KG

Klingenberg, 2016-09-29

Thorsten Seefried, Vice President
Process Gauges

i.V. Michael Glombitza, Head of Quality Management
Process Gauges

WIKA Alexander Wiegand SE & Co. KG
Alexander-Wiegand-Straße 30
63911 Klingenberg
Germany

Tel. +49 9372 132-0
Fax +49 9372 132-406
E-Mail info@wika.de
www.wika.de

Kommanditgesellschaft: Sitz Klingenberg – Amtsgericht Aschaffenburg HRA 1819
Komplementärin: WIKA Verwaltungs SE & Co. KG – Sitz Klingenberg – Amtsgericht Aschaffenburg HRA 4685

Komplementärin:
WIKA International SE - Sitz Klingenberg - Amtsgericht Aschaffenburg HRB 10505
Vorstand: Alexander Wiegand
Vorsitzender des Aufsichtsrats: Dr. Max Egli

WIKA

Deklaracja zgodności UE

Dokument nr: 11603046.02

Oświadczamy na własną odpowiedzialność, że produkty oznaczone znakiem CE

Model:

Model 53:
A5300 + option ATEX / A5301+ option ATEX / S5300 + option ATEX / S5301 + option ATEX
Model 54:
A5400 + option ATEX / A5401 + option ATEX / A5402 + option ATEX / A5403 + option ATEX /
R5440 + option ATEX / R5441 + option ATEX / R5442 + option ATEX / R5443 + option ATEX / S5410 + option ATEX / S5411 + option ATEX / S5412 + option ATEX / S5413+ option ATEX
Model 55:
A5525 + option ATEX / A5500 + option ATEX / A5501 + option ATEX / R5526 + option ATEX / R5502 + option ATEX / R5503 + option ATEX / S5550 + option ATEX / S5551+ option ATEX

Opis: **Termometry bimetaliczne**

zgodnie z obowiązującą kartą katalogową TM53.01
TM54.01
TM55.01

spełniają podstawowe wymagania dyrektyw(-y) :

2014/34/UE Wybuch ochrona (ATEX) (1)

Ex II 2 GD c TX X

alternatywa

Ex II 2 G c TX X

Ex II 2 D c TX X

Zastosowano normy zharmonizowane

EN 1127-1 :2011
EN 13463-1:2009
EN 13463-5:2011

(1) Procedura oceny zgodności 'Wewnętrza kontrola produkcji'. Dokumentacja złożona w jednostce certyfikującej TÜV Nord CERT GmbH, D-45141 Essen (nr. Rej. 0044), numer referencyjny 8000550764.

Podpisano w imieniu firmy

WIKA Alexander Wiegand SE & Co. KG

Klingenberg, 2016-09-29

Thorsten Seefried, Vice President
Process Gauges

Michael Glombitza, Head of Quality Management
Process Gauges

WIKA Alexander Wiegand SE & Co. KG
Alexander-Wiegand-Straße 30
63911 Klingenberg
Germany

Tel. +49 9372 132-0
Fax +49 9372 132-406
E-Mail info@wika.de
www.wika.de

Kommanditgesellschaft: Sitz Klingenberg – Amtsgericht Aschaffenburg HRA 1819
Komplementärin: WIKA Verwaltungs SE & Co. KG – Sitz Klingenberg – Amtsgericht Aschaffenburg HRA 4685

Komplementärin:
WIKA International SE - Sitz Klingenberg - Amtsgericht Aschaffenburg HRB 10505
Vorstand: Alexander Wiegand
Vorsitzender des Aufsichtsrats: Dr. Max Egli

A.9 Differential pressure transmitter

Name	Data
Designation	*Differential pressure transmitter*
Type	Deltabar S PMD 75
Number	
Type of manual	*Technical documentation*
Manufacturer	Endress & Hauser AG

Place of installation	TAG No.	Link
Blower oil system	3.2.1.X32	
Gearbox oil system 50 L	3.2.1.X51	linktarget doesn't exist but @y.link.required='true'

A.9.1 Operating instructions

BA00270P/00/EN/20.16
71336227

valid from Software version:
02.30.zz

Products Solutions Services

Operating Instructions
Deltabar S FMD77, FMD78, PMD75

Differential pressure measurement, Pressure measurement

HART COMMUNICATION PROTOCOL

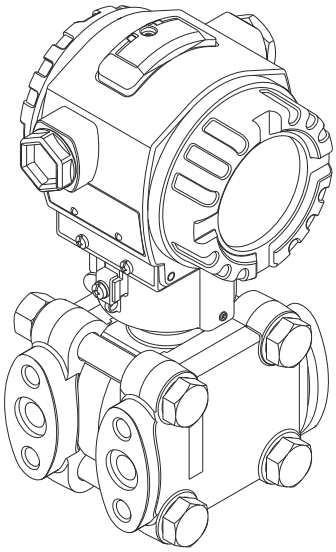

Endress+Hauser
People for Process Automation

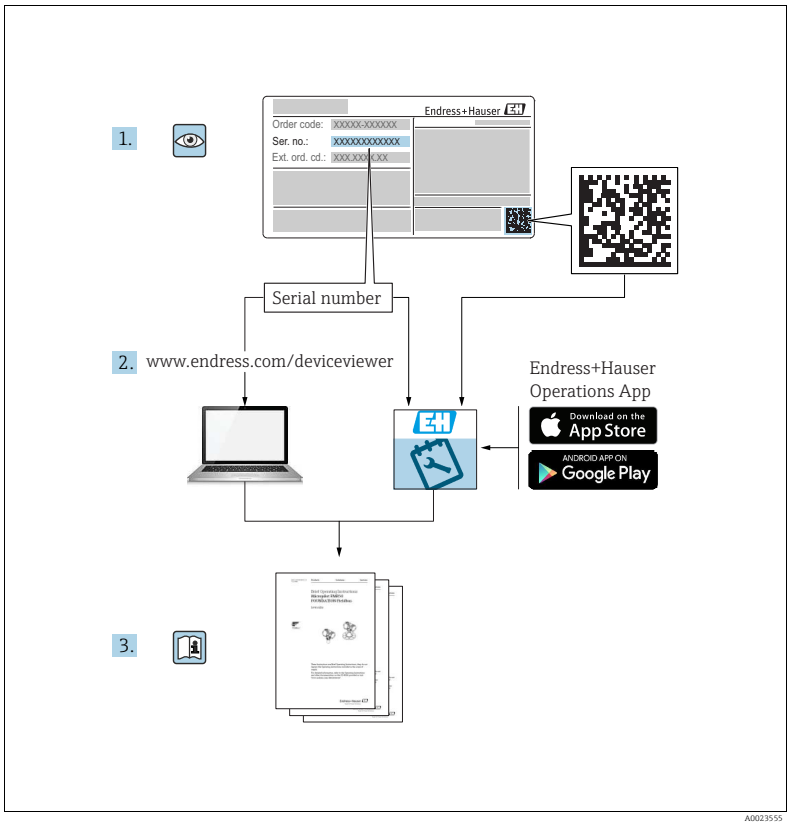

Make sure the document is stored in a safe place such that it is always available when working on or with the device.
To avoid danger to individuals or the facility, read the "Basic safety instructions" section carefully, as well as all other safety instructions in the document that are specific to working procedures.
The manufacturer reserves the right to modify technical data without prior notice. Your Endress+Hauser Sales Center will supply you with current information and updates to these Instructions.

Table of contents

1 Document information 4

1.1 Document function 4
1.2 Symbols used 4
1.3 Registered trademarks 5
1.4 Terms and abbreviations 6
1.5 Turn down calculation 7

2 Basic safety instructions 8

2.1 Requirements concerning the staff 8
2.2 Designated use 8
2.3 Workplace safety 8
2.4 Operational safety 8
2.5 Hazardous area 9
2.6 Product safety 9
2.7 Functional Safety SIL3 (optional) 9

3 Identification 10

3.1 Product identification 10
3.2 Device designation 10
3.3 Scope of delivery 12
3.4 CE mark, declaration of conformity 12

4 Installation 13

4.1 Incoming acceptance and storage 13
4.2 Installation conditions 13
4.3 Installation instructions 14
4.4 Post-installation check 31

5 Wiring 32

5.1 Connecting the device 32
5.2 Connecting the measuring unit 34
5.3 Potential matching 36
5.4 Overvoltage protection (optional) 36
5.5 Post-connection check 36

6 Operation. 37

6.1 On-site display (optional) 37
6.2 Operating elements 39
6.3 On-site operation – on-site display not connected 42
6.4 On-site operation – on-site display connected 46
6.5 HistoROM®/M-DAT (optional) 49
6.6 Operation via SFX100 52
6.7 FieldCare 52
6.8 Locking/unlocking operation 52
6.9 Factory setting (reset) 53

7 Commissioning. 55

7.1 Configuring messages 55
7.2 Function check 55
7.3 Selecting language and measuring mode 55
7.4 Position adjustment 56
7.5 Flow measurement 58
7.6 Level measurement 61
7.7 Differential pressure measurement 68

8 Maintenance 70

8.1 Cleaning instructions 70
8.2 Exterior cleaning 70

9 Trouble-shooting 71

9.1 Messages 71
9.2 Response of outputs to errors 79
9.3 Confirming messages 80
9.4 Repair 81
9.5 Repair of Ex-certified devices 81
9.6 Spare Parts 81
9.7 Return 81
9.8 Disposal 82
9.9 Software history 82

10 Technical data 83

Index 84

1 Document information

1.1 Document function

These Operating Instructions contain all the information that is required in various phases of the life cycle of the device: from product identification, incoming acceptance and storage, to mounting, connection, operation and commissioning through to troubleshooting, maintenance and disposal.

1.2 Symbols used

1.2.1 Safety symbols

Symbol	Meaning
DANGER A0011189-DE	**DANGER!** This symbol alerts you to a dangerous situation. Failure to avoid this situation will result in seriousor fatal injury.
WARNING A0011190-DE	**WARNING!** This symbol alerts you to a dangerous situation. Failure to avoid this situation can result in seriousor fatal injury.
CAUTION A0011191-DE	**CAUTION!** This symbol alerts you to a dangerous situation. Failure to avoid this situation can result in minoror medium injury.
NOTICE A0011192-DE	**NOTICE!** This symbol contains information on procedures and other facts which do not result in personalinjury.

1.2.2 Electrical symbols

Symbol	Meaning	Symbol	Meaning
⎓	Direct current	~	Alternating current
≂	Direct current and alternating current	⏚	**Ground connection** A grounded terminal which, as far as the operator is concerned, is grounded via a grounding system.
⏚	**Protective ground connection** A terminal which must be connected to ground prior to establishing any other connections.	⏚	**Equipotential connection** A connection that has to be connected to the plant grounding system: This may be a potential equalization line or a star grounding system depending on national or company codes of practice.

1.2.3 Tool symbols

Symbol	Meaning
A0011221	Allen key
A0011222	Hexagon wrench

1.2.4 Symbols for certain types of information

Symbol	Meaning
A0011182	**Permitted** Indicates procedures, processes or actions that are permitted.
A0011184	**Forbidden** Indicates procedures, processes or actions that are forbidden.
A0011193	**Tip** Indicates additional information.
A0028658	Reference to documentation
A0028659	Reference to page
A0028660	Reference to graphic
1. , 2. , 3. ... A0031595	Series of steps
A0018343	Result of a sequence of actions
A0028673	Visual inspection

1.2.5 Symbols in graphics

Symbol	Meaning
1, 2, 3, 4, ...	Item numbers
1. , 2. , 3. ... A0031595	Series of steps
A, **B**, **C**, **D**, ...	Views

1.2.6 Symbols at the device

Symbol	Meaning
A0019159	**Safety instructions** Observe the safety instructions contained in the associated Operating Instructions.

1.3 Registered trademarks

KALREZ, VITON, TEFLON
Registered trademarks of E.I. Du Pont de Nemours & Co., Wilmington, USA

TRI-CLAMP
Registered trademark of Ladish & Co., Inc., Kenosha, USA

HART
Registered trademark of the HART Communication Foundation, Austin, USA.

GORE-TEX®
Registered trademarks of W.L. Gore & Associates, Inc., USA

1.4 Terms and abbreviations

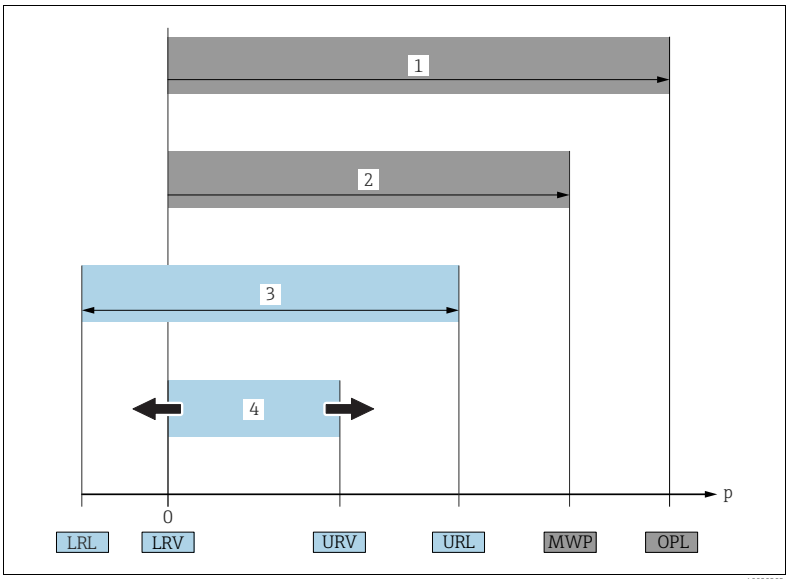

Position	Term/Abbreviation	Explanation
1	OPL	The OPL (over pressure limit = sensor overload limit) for the sensors depends on the lowest-rated element, with regard to pressure, of the selected components, i.e. the process connection must be taken into consideration in addition to the measuring cell. Also observe pressure-temperature dependency. For the relevant standards and additional notes, see technical information. The OPL may be applied for a limited time period.
2	MWP	The MWP (maximum working pressure) for the sensors depends on the lowest-rated element, with regard to pressure, of the selected components, i.e. the process connection has to be taken into consideration in addition to the measuring cell. Also observe pressure-temperature dependency. For the relevant standards and additional notes, see technical information. The MWP may be applied for an unlimited time.
3	Maximum sensor measuring range	Range between LRL and URL This span is the maximum calibratable/adjustable measuring span.
4	Calibrated/Adjusted measuring span	Range between LRV and URV Factory setting: 0...URL Other calibrated spans can be ordered with customised settings.
p	-	Pressure
-	LRL	Lower range limit
-	URL	Upper range limit
-	LRV	Lower range value
-	URV	Upper range value
-	TD	Turn down

1.5 Turn down calculation

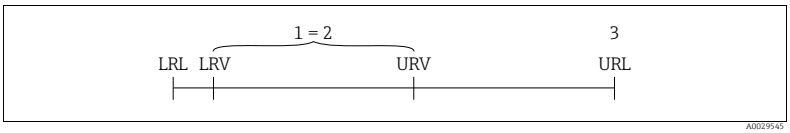

Fig. 1:

1 Calibrated/Adjusted measuring span
2 Zero-based span
3 Upper range limit

Example

- Sensor: 10 bar (150 psi)
- Upper range limit (URL) = 10 bar (150 psi)
- Calibrated/Adjusted measuring span: 0...5 bar (0...75 psi)
- Lower range value (LRV) = 0 bar
- Upper range value (URV) = 5 bar (75 psi)

Turn down (TD):

$$TD = \frac{URL}{|URV - LRV|}$$

$$TD = \frac{10\ \text{bar (150 psi)}}{|5\ \text{bar (75 psi)} - 0\ \text{bar (0 psi)}|} = 2$$

In this example, the TD is thus 2:1.
This span is based on the zero point.

2 Basic safety instructions

2.1 Requirements concerning the staff

The personnel for installation, commissioning, diagnostics and maintenance must fulfill the following requirements:
- Trained, qualified specialists: must have a relevant qualification for this specific function and task
- Are authorized by the plant owner/operator
- Are familiar with federal/national regulations
- Before beginning work, the specialist staff must have read and understood the instructions in the Operating Instructions and supplementary documentation as well as in the certificates (depending on the application)
- Following instructions and basic conditions

The operating personnel must fulfill the following requirements:
- Being instructed and authorized according to the requirements of the task by the facility's owner-operator
- Following the instructions in these Operating Instructions

2.2 Designated use

The Deltabar S is a differential pressure transmitter for measuring differential pressure, flow, pressure and level.

2.2.1 Incorrect use

The manufacturer is not liable for damage caused by improper or non-designated use.
Verification for borderline cases:
For special fluids and fluids for cleaning, Endress+Hauser is glad to provide assistance in verifying the corrosion resistance of fluid-wetted materials, but does not accept any warranty or liability.

2.3 Workplace safety

For work on and with the device:
- Wear the required personal protective equipment according to federal/national regulations.
- Switch off the supply voltage before connecting the device.

2.4 Operational safety

Risk of injury!
- ▶ Operate the device in proper technical condition and fail-safe condition only.
- ▶ The operator is responsible for interference-free operation of the device.

Conversions to the device
Unauthorized modifications to the device are not permitted and can lead to unforeseeable dangers:
- ▶ If, despite this, modifications are required, consult with Endress+Hauser.

Repair
To ensure continued operational safety and reliability,
- ▶ Carry out repairs on the device only if they are expressly permitted.
- ▶ Observe federal/national regulations pertaining to repair of an electrical device.
- ▶ Use original spare parts and accessories from Endress+Hauser only.

2.5 Hazardous area

To eliminate a danger for persons or for the facility when the device is used in the hazardous area (e.g. explosion protection, pressure vessel safety):

- Based on the nameplate, check whether the ordered device is permitted for the intended use in the hazardous area.
- Observe the specifications in the separate supplementary documentation that is an integral part of these Instructions.

2.6 Product safety

This measuring device is designed in accordance with good engineering practice to meet state-of-the- art safety requirements, has been tested, and left the factory in a condition in which they are safe to operate. It fulfills general safety requirements and legal requirements. It also conforms to the EC directives listed in the device-specific EC declaration of conformity. Endress+Hauser confirms this fact by applying the CE mark.

2.7 Functional Safety SIL3 (optional)

If using devices for applications with safety integrity, the Functional Safety Manual must be observed thoroughly.

3 Identification

3.1 Product identification

The following options are available for identification of the measuring device:
- Nameplate specifications
- Order code with breakdown of the device features on the delivery note
- Enter serial numbers from nameplates in W@M Device Viewer (www.endress.com/deviceviewer) : All information about the measuring device is displayed.

For an overview of the technical documentation provided, enter the serial number from the nameplates in the W@M Device Viewer (www.endress.com/deviceviewer).

3.1.1 Manufacturer address

Endress+Hauser GmbH+Co. KG
Hauptstraße 1
79689 Maulburg, Germany
Address of the manufacturing plant: See nameplate.

3.2 Device designation

3.2.1 Nameplate

- The MWP (maximum working pressure) is specified on the nameplate. This value refers to a reference temperature of +20 °C (68°F) and may be applied to the device for an unlimited time. Observe temperature dependency of the MWP. The pressure values permitted at higher temperatures can be found in the standards EN 1092-1: 2001 Tab. 18 (With regard to their stability-temperature property, the materials 1.4435 and 1.4404 are grouped together under 13EO in EN 1092-1 Tab. 18. The chemical composition of the two materials can be identical.), ASME B 16.5a – 1998 Tab. 2-2.2 F316, ASME B 16.5a – 1998 Tab. 2.3.8 N10276, JIS B 2220.
- For PMD75, the MWP applies for the temperature ranges specified in the Technical Information TI00382P in the "Ambient temperature range" and "Process temperature limits" sections.
- The test pressure corresponds to the over pressure limit (OPL) of the device = MWP x 1.5.
- The Pressure Equipment Directive (2014/68/EU) uses the abbreviation "PS". The abbreviation "PS" corresponds to the MWP (maximum working pressure) of the measuring device.

Aluminium housing (T14/T15) and stainless steel housing (T14)

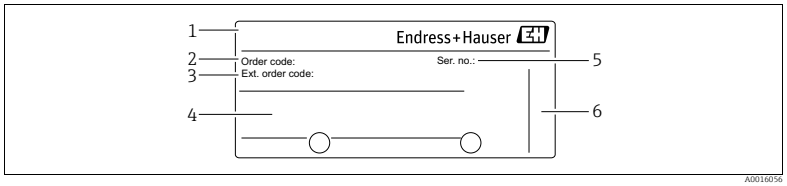

Fig. 2: Nameplate

1 Device name
2 Order code (for re-orders)
3 Extended order code (complete)
4 Technical data
5 Serial number (for identification)
6 Address of manufacturer

Devices for use in hazardous areas are fitted with an additional nameplate.

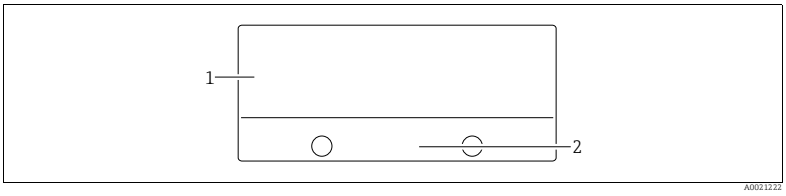

Fig. 3: Additional nameplate

1 Approval-specific information
2 Document number for safety instructions or drawing number

Devices suitable for oxygen applications or with PVDF process connection are fitted with an additional nameplate.

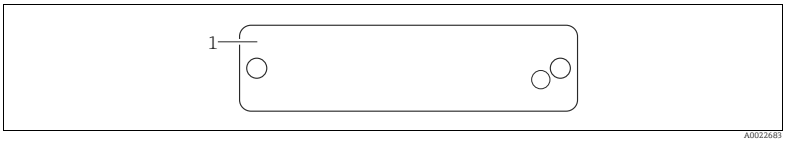

Fig. 4: Additional nameplate

1 Application limits

Hygenic stainless steel housing (T17)

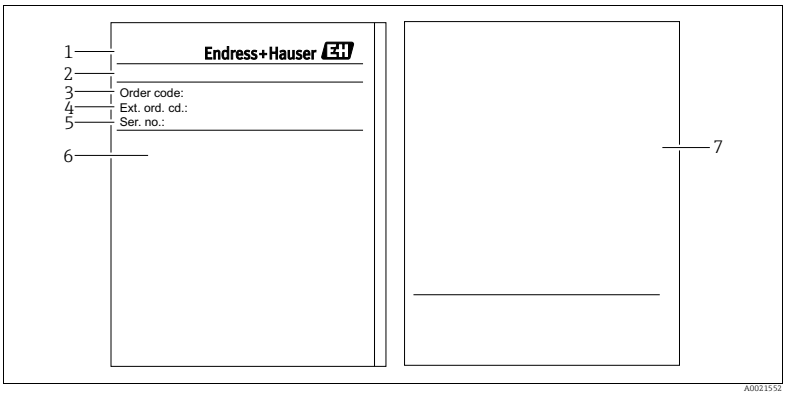

Fig. 5: Nameplate

1 Device name
2 Address of manufacturer
3 Order code (for re-orders)
4 Extended order code (complete)
5 Serial number (for identification)
6 Technical data
7 Approval-specific information and document number for safety instructions or drawing number

3.2.2 Identifying the sensor type

See parameter "Sensor Meas.Type" in Operating Instruction BA00274P.

3.3 Scope of delivery

The scope of delivery comprises:
- Deltabar S differential pressure transmitter
- For devices with the "HistoROM/M-DAT" option:
  CD-ROM with Endress+Hauser operating program
- Optional accessories

Documentation supplied:
- The Operating Instructions BA00270P and BA00274P are available via the Internet.
  → See: www.endress.com → Download.
- Brief Operating Instructions KA01018P
- Leporello KA00218
- Final inspection report
- Also Safety Instructions with ATEX, IECEx and NEPSI devices
- Optional: factory calibration form, test certificates

3.4 CE mark, declaration of conformity

The device is designed to meet state-of-the-art safety requirements, has been tested and left the factory in a condition in which it is safe to operate. The device complies with the applicable standards and regulations as listed in the EC declaration of conformity and thus complies with the statutory requirements of the EC Directives. Endress+Hauser confirms the successful testing of the device by affixing to it the CE mark.

4 Installation

NOTICE

Incorrect handling!

Damage of the device!

- ▶ Disassembly of the screws with item number (1) is not permissible under any circumstances and will result in loss of warranty.

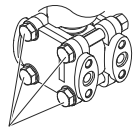

A0025336

4.1 Incoming acceptance and storage

4.1.1 Incoming acceptance

- Check the packaging and the contents for damage.
- Check the shipment, make sure nothing is missing and that the scope of supply matches your order.

4.1.2 Transport

⚠ WARNING

Incorrect transportation

Housing, diaphragm and capillaries may become damaged, and there is a risk of injury!

- ▶ Transport the measuring device to the measuring point in its original packaging or by the process connection (with secure transport protection for the diaphragm).
- ▶ Follow the safety instructions and transport conditions for devices weighing more than 18 kg (39.6 lbs).
- ▶ Do not use capillaries as a carrying aid for the diaphragm seals.

4.1.3 Storage

The device must be stored in a dry, clean area and protected against damage from impact (EN 837-2).

Storage temperature range:

- −40 to +90°C (−40 to +194°F)
- On-site display: −40 to +85°C (−40 to +185°F)
- Separate housing: −40 to +60°C (−40 to +140°F)

4.2 Installation conditions

4.2.1 Dimensions

→ For dimensions, please refer to the Technical Information for Deltabar S TI00382P, "Mechanical construction" section.

4.3 Installation instructions

- Due to the orientation of the Deltabar S, there may be a shift in the measured value, i.e. when the container is empty, the measured value does not display zero. You may correct this zero point shift either directly on the device using the E-key or by remote operation. → 40, "Function of the operating elements – on-site display not connected" or → 56, "Position adjustment".
- For FMD77 and FMD78, please refer to → 22, Section 4.3.5 "Installation instructions for devices with diaphragm seals (FMD78)".
- General recommendations for routing the impulse piping can be found in DIN 19210 "Methods for measurement of fluid flow; differential piping for flow measurement devices" or the corresponding national or international standards.
- Using a manifold allows for easy commissioning, installation and maintenance without interrupting the process.
- When routing the impulse piping outdoors, ensure that sufficient anti-freeze protection is used, e.g. by using pipe heat tracing.
- Install the impulse piping with a monotonic gradient of at least 10%.
- To ensure optimal readability of the on-site display, it is possible to rotate the housing up to 380°. → 30, Section 4.3.10 "Rotating the housing".
- Endress+Hauser offers a mounting bracket for installing on pipes or walls. → 27, Section 4.3.8 "Wall and pipe-mounting (optional)".

4.3.1 Installation for flow measurement

Flow measurement in gases with PMD75

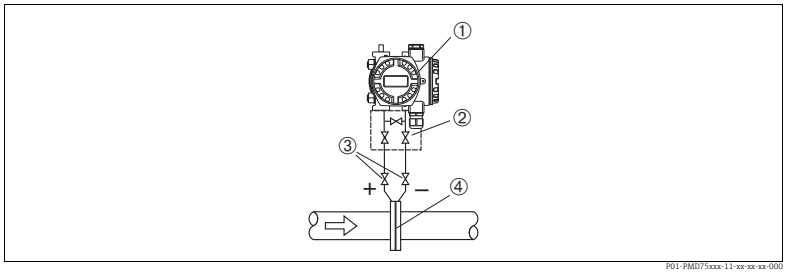

Fig. 6: Measuring layout for flow measurement in gases with PMD75

1 Deltabar S, here PMD75
2 Three-valve manifold
3 Shut-off valves
4 Orifice plate or pitot tube

- Mount the Deltabar S above the measuring point so that the condensate can run off into the process piping.

Flow measurement in steam with PMD75

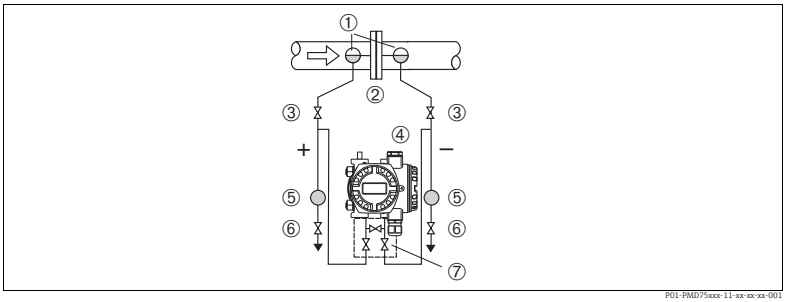

Fig. 7: Measuring layout for flow measurement in steam with PMD75

1 Condensate traps
2 Orifice plate or pitot tube
3 Shut-off valves
4 Deltabar S, here PMD75
5 Separator
6 Drain valves
7 Three-valve manifold

- Mount the Deltabar S below the measuring point.
- Mount the condensate traps at the same level as the tapping points and at the same distance to the Deltabar S.
- Prior to commissioning, fill the impulse piping to the height of the condensate traps.

Flow measurement in liquids with PMD75

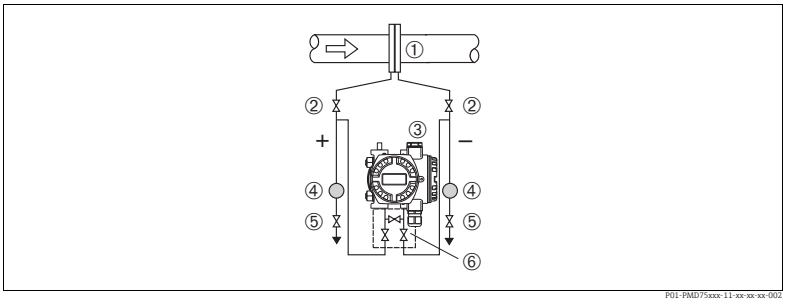

Fig. 8: Measuring layout for flow measurement in liquids with PMD75

1 Orifice plate or pitot tube
2 Shut-off valves
3 Deltabar S, here PMD75
4 Separator
5 Drain valves
6 Three-valve manifold

- Mount the Deltabar S below the measuring point so that the impulse piping is always filled with liquid and gas bubbles can run back into the process piping.
- When measuring in media with solid parts, such as dirty liquids, installing separators and drain valves is useful for capturing and removing sediment.

4.3.2 Installation for level measurement

Level measurement in an open container with PMD75

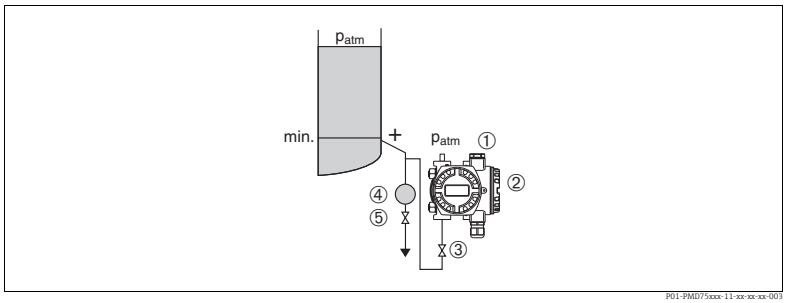

Fig. 9: Measuring layout for level measurement in open containers with PMD75

1 The negative side is open to atmospheric pressure
2 Deltabar S, here PMD75
3 Shut-off valve
4 Separator
5 Drain valve

- Mount the Deltabar S below the lower measuring connection so that the impulse piping is always filled with liquid.
- The negative side is open to atmospheric pressure.
- When measuring in media with solid parts, such as dirty liquids, installing separators and drain valves is useful for capturing and removing sediment.

Level measurement in an open container with FMD77

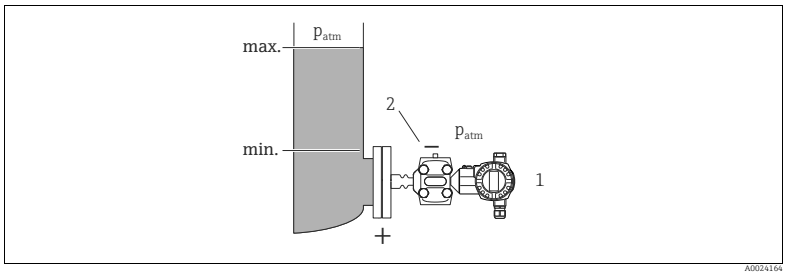

Fig. 10: Measuring layout for level measurement in open containers with FMD77

1 Deltabar S, here FMD77
2 The negative side is open to atmospheric pressure

- Mount the Deltabar S direct on the container. → 24, Section 4.3.6 "Seal for flange mounting".
- The negative side is open to atmospheric pressure.

Level measurement in a closed container with PMD75

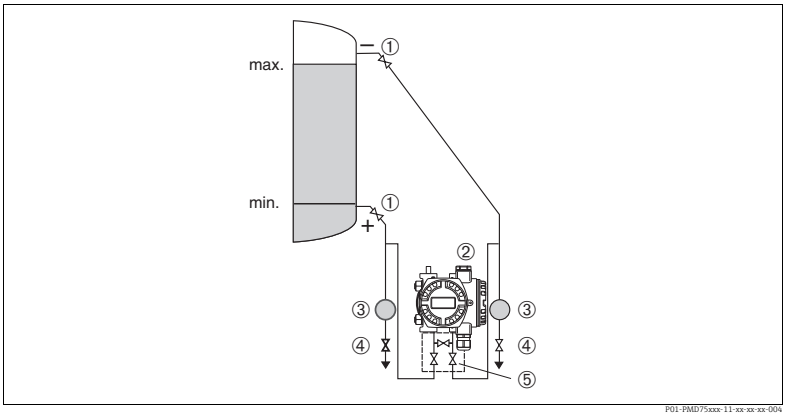

Fig. 11: Measuring layout for level measurement in a closed container with PMD75

1 Shut-off valves
2 Deltabar S, PMD75
3 Separator
4 Drain valves
5 Three-valve manifold

- Mount the Deltabar S below the lower measuring connection so that the impulse piping is always filled with liquid.
- Always connect the impulse piping of negative side above the maximum level.
- When measuring in media with solid parts, such as dirty liquids, installing separators and drain valves is useful for capturing and removing sediment.

Level measurement in a closed container with FMD77

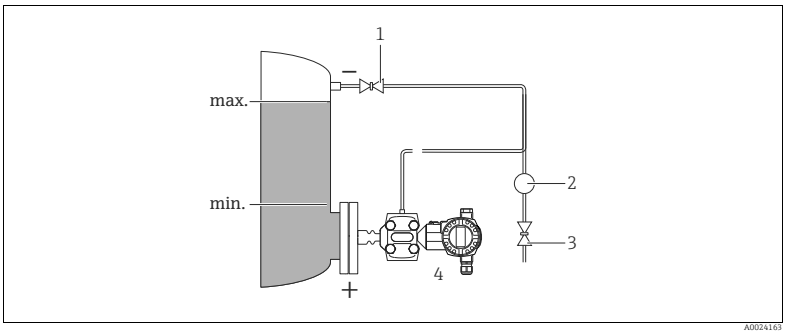

Fig. 12: Measuring layout for level measurement in a closed container with FMD77

1 Shut-off valve
2 Separator
3 Drain valve
4 Deltabar S, here FMD77

- Mount the Deltabar S direct on the container. → 24, Section 4.3.6 "Seal for flange mounting".
- Always connect the impulse piping of negative side above the maximum level.
- When measuring in media with solid parts, such as dirty liquids, installing separators and drain valves is useful for capturing and removing sediment.

Level measurement in a closed container with FMD78

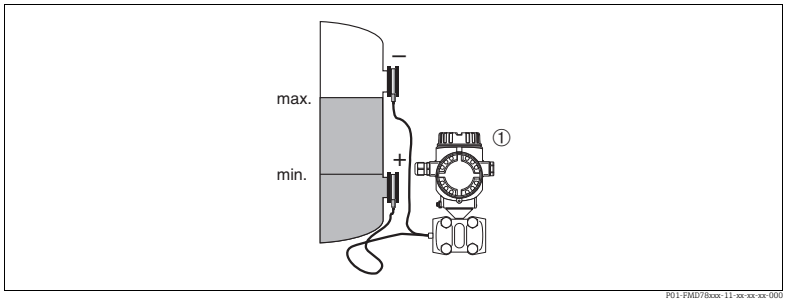

Fig. 13: Measuring layout for level measurement in a closed container with FMD78

1 Deltabar S, here FMD78

- Mount the Deltabar S below the lower diaphragm seal. → 22, Section 4.3.5 "Installation instructions for devices with diaphragm seals (FMD78)".
- The ambient temperature should be the same for both capillaries.

Level measurement is only ensured between the upper edge of the lower diaphragm seal and the lower edge of the upper diaphragm seal.

Level measurement in a closed container with superimposed steam with PMD 70/ PMD75

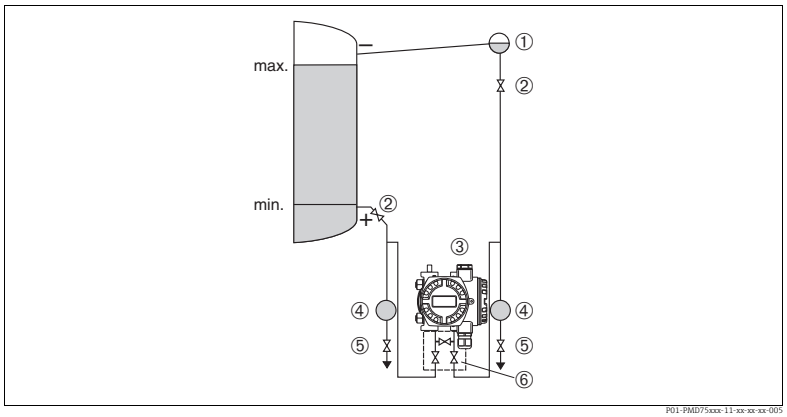

Fig. 14: Measuring layout for level measurement in a container with superimposed steam with PMD75

1 Condensate trap
2 Shut-off valves
3 Deltabar S, here PMD75
4 Separator
5 Drain valves
6 Three-valve manifold

- Mount the Deltabar S below the lower measuring connection so that the impulse piping is always filled with liquid.
- Always connect the impulse piping of negative side above the maximum level.
- A condensate trap ensures constant pressure on the negative side.
- When measuring in media with solid parts, such as dirty liquids, installing separators and drain valves is useful for capturing and removing sediment.

Level measurement in a closed container with superimposed steam with FMD77

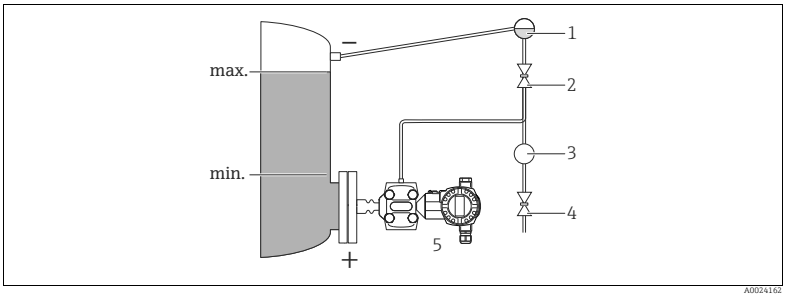

Fig. 15: Measuring layout for level measurement in a container with superimposed steam with FMD77

1 Condensate trap
2 Shut-off valve
3 Separator
4 Drain valve
5 Deltabar S, here FMD77

- Mount the Deltabar S direct on the container. → 24, Section 4.3.6 "Seal for flange mounting".
- Always connect the impulse piping of negative side above the maximum level.
- A condensate trap ensures constant pressure on the negative side.
- When measuring in media with solid parts, such as dirty liquids, installing separators and drain valves is useful for capturing and removing sediment.

4.3.3 Installation for pressure measurement (160 bar (2400 psi) and 250 bar (3750 psi) measuring cell)

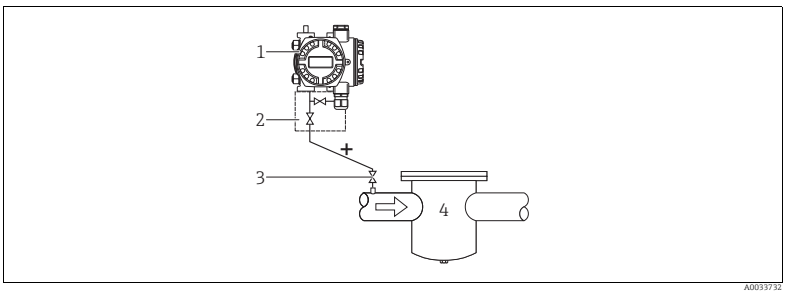

Fig. 16: Measuring layout for pressure measurement in gases and steam with PMD75 with blind flange on LP side

1 Deltabar S, here PMD75
2 Two-valve manifold
3 Shut-off valve
4 Pressurized container

The negative side is open to the atmospheric pressure, via the reference air filter screwed into the LP side flange.

- Mount the Deltabar S above the measuring point so that the condensate can run off into the process piping.

4.3.4 Installation for differential pressure measurement

Differential pressure measurement in gases and steam with PMD75

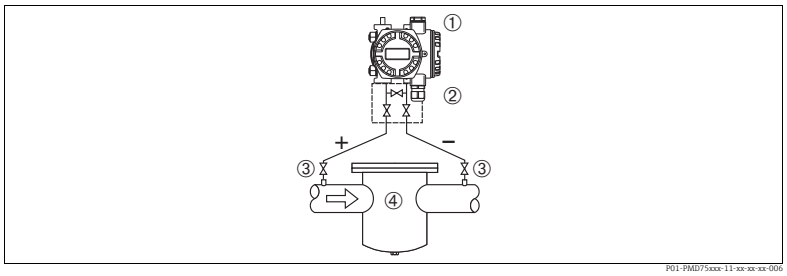

Fig. 17: Measuring layout for differential pressure measurement in gases and steam with PMD75

1 Deltabar S, here PMD75
2 Three-valve manifold
3 Shut-off valves
4 e.g. filter

- Mount the Deltabar S above the measuring point so that the condensate can run off into the process piping.

Differential pressure measurement in liquids with PMD75

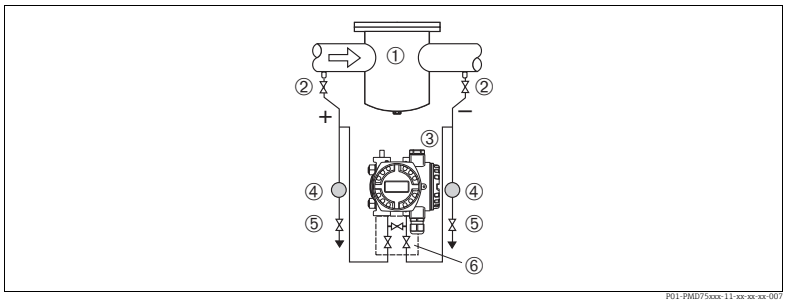

Fig. 18: Measuring layout for differential pressure measurement in liquids with PMD75

1 e.g. filter
2 Shut-off valves
3 Deltabar S, here PMD75
4 Separator
5 Drain valves
6 Three-valve manifold

- Mount the Deltabar S below the measuring point so that the impulse piping is always filled with liquid and gas bubbles can run back into the process piping.
- When measuring in media with solid parts, such as dirty liquids, installing separators and drain valves is useful for capturing and removing sediment.

Differential pressure measurement in gases, steam and liquids with FMD78

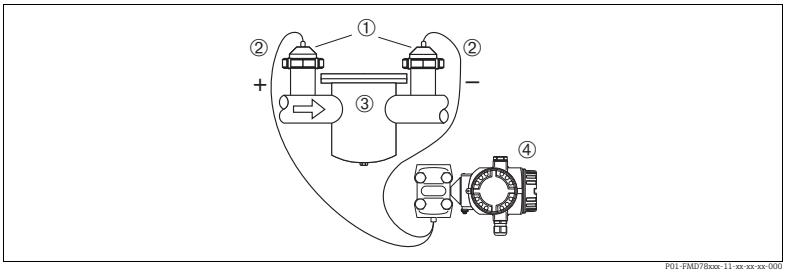

Fig. 19: Measuring layout for differential pressure measurement in gases, steam and liquids with FMD78

1 Diaphragm seal
2 Capillary
3 e.g. filter
4 Deltabar S, here FMD78

- Mount the diaphragm seal with capillaries at the top or on the side on the piping.
- For vacuum applications: mount the Deltabar S below the measuring point. → 22, Section 4.3.5 "Installation instructions for devices with diaphragm seals (FMD78)", "Vacuum application" part.
- The ambient temperature should be the same for both capillaries.

4.3.5 Installation instructions for devices with diaphragm seals (FMD78)

- Please note that the hydrostatic pressure of the liquid columns in the capillaries can cause zero point shift. The zero point shift can be corrected.
- Do not clean or touch the process isolating diaphragm of the diaphragm seal with hard or pointed objects.
- Do not remove process isolating diaphragm protection until shortly before installation.

NOTICE

Improper handling!

Damage to the device!

- ▶ A diaphragm seal and the pressure transmitter together form a closed, oil-filled calibrated system. The fill fluid hole is sealed and may not be opened.
- ▶ When using a mounting bracket, sufficient strain relief must be ensured for the capillaries in order to prevent the capillary bending down (bending radius ≥ 100 (3.94 in)).
- ▶ Please observe the application limits of the diaphragm seal filling oil as detailed in the Technical Information for Deltabar S TI00382P, "Planning instructions for diaphragm seal systems" section.

NOTICE

In order to obtain more precise measurement results and to avoid a defect in the device, mount the capillaries as follows:

- ▶ Vibration-free (in order to avoid additional pressure fluctuations)
- ▶ Not in the vicinity of heating or cooling lines
- ▶ Insulate if the ambient temperature is below or above the reference temperature
- ▶ With a bending radius of ≥ 100 mm (3.94 in).
- ▶ Do not use the capillaries as a carrying aid for the diaphragm seals!
- ▶ The ambient temperature and length of both capillaries should be the same when using two-sided diaphragm seal systems.
- ▶ Two diaphragm seals which are the same (e.g. with regard to diameter, material, etc.) should always be used for the negative and positive side (standard delivery).

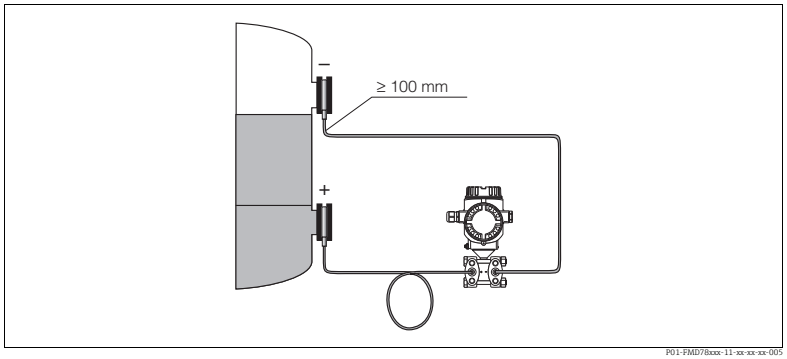

Fig. 20: Mounting Deltabar S, FMD78 with diaphragm seals and capillary, recommended mounting for vacuum applications: mount pressure transmitter below the lowest diaphragm seal!

Vacuum application

For applications under vacuum, Endress+Hauser recommends mounting the pressure transmitter below the diaphragm seal. This prevents vacuum loading of the diaphragm seal caused by the presence of fill fluid in the capillary.

When the pressure transmitter is mounted above the diaphragm seal, the maximum height difference H1 in accordance with the illustrations below must not be exceeded.

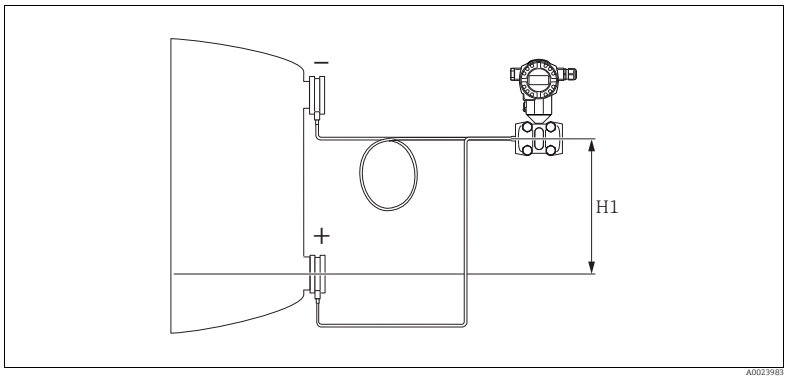

Fig. 21: Installation above the lower diaphragm seal

The maximum height difference depends on the density of the filling oil and the smallest ever pressure that is permitted to occur at the diaphragm seal (empty vessel), see illustration below:

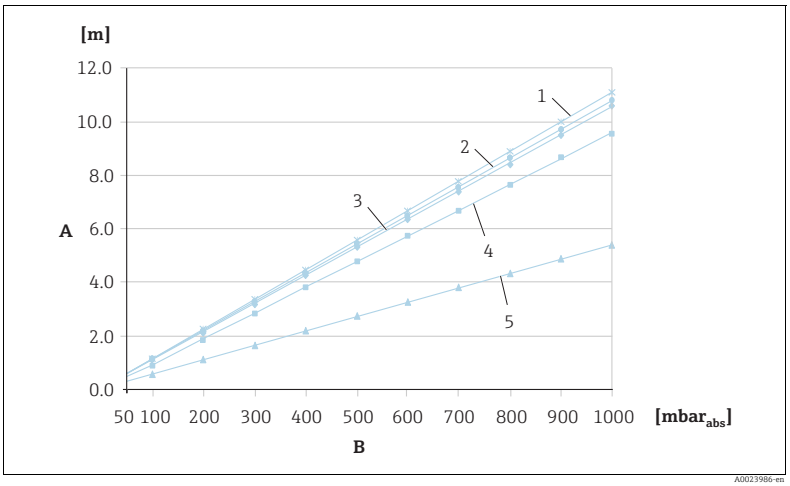

Fig. 22: Diagram of maximum installation height above the lower diaphragm seal for vacuum applications depending on the pressure at the diaphragm seal on the positive side

A Height difference H1
B Pressure at diaphragm seal
1 Low temperature oil
2 Vegetable oil
3 Silicone oil
4 High-temperature oil
5 Inert oil

4.3.6 Seal for flange mounting

NOTICE

Distorted measurement results.

The seal is not allowed to press on the process isolating diaphragm as this could affect the measurement result.

▶ Ensure that the seal is not touching the process isolating diaphragm.

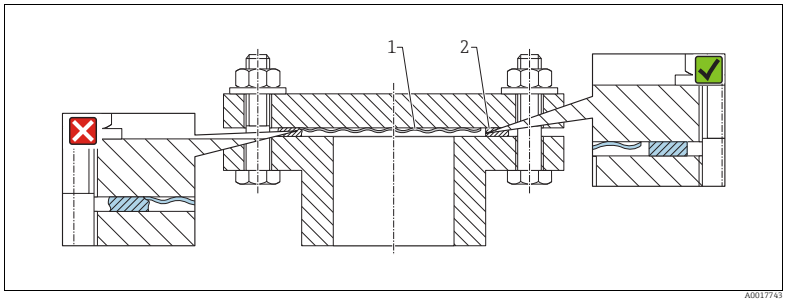

Fig. 23:
1 Process isolating diaphragm
2 Seal

4.3.7 Heat insulation – FMD77

The FMD77 must only be insulated up to a certain height. The maximum permitted insulation height applies to an insulation material with a heat conductivity ≤ 0.04 W/(m x K) and to the maximum permitted ambient and process temperature. The data were determined under the most critical application "quiescent air".

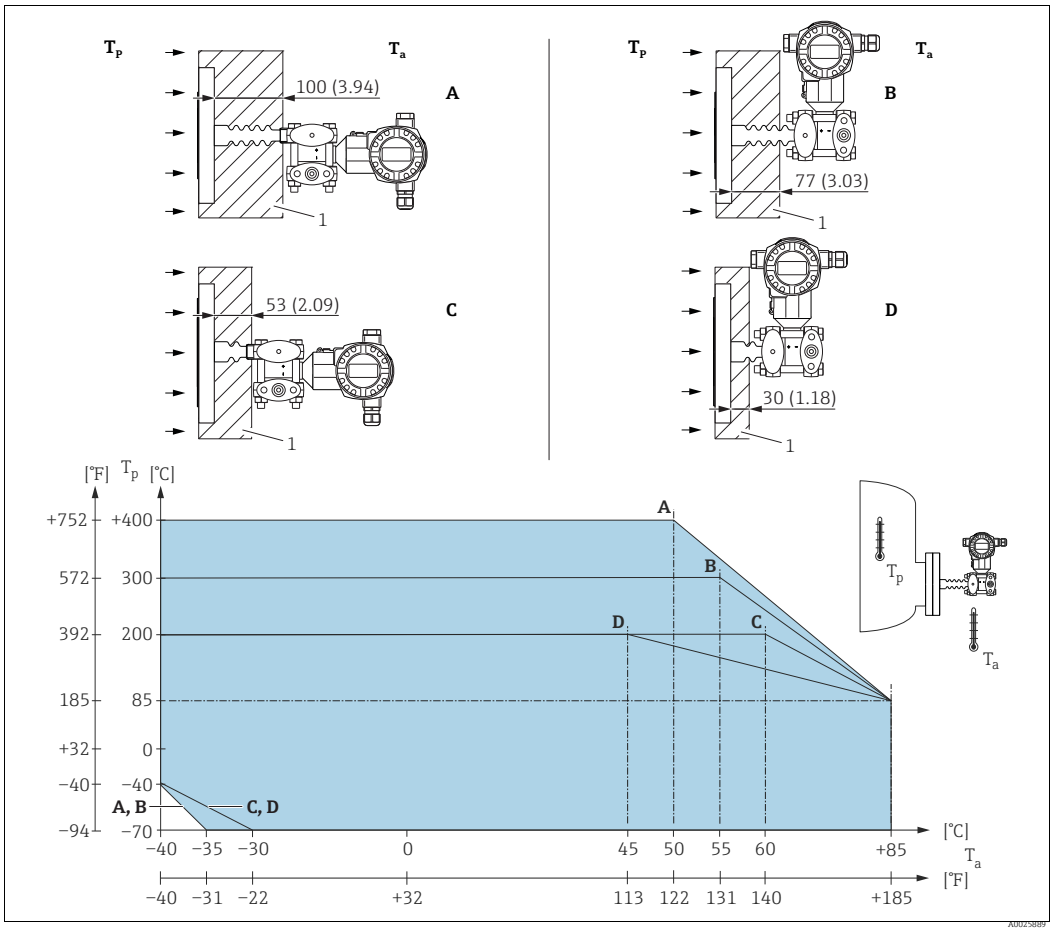

Fig. 24: Maximum insulation height

1 Insulation material

Without insulation, the ambient temperature decreases by 5 K.

Position	Design	Temperature isolator	Option [1]
A	Transmitter horizontally	long	MA
B	Transmitter vertical	long	MB
C	Transmitter horizontally	short	MC
D	Transmitter vertical	short	MD

1) Product Configurator, order code for "Process connection"

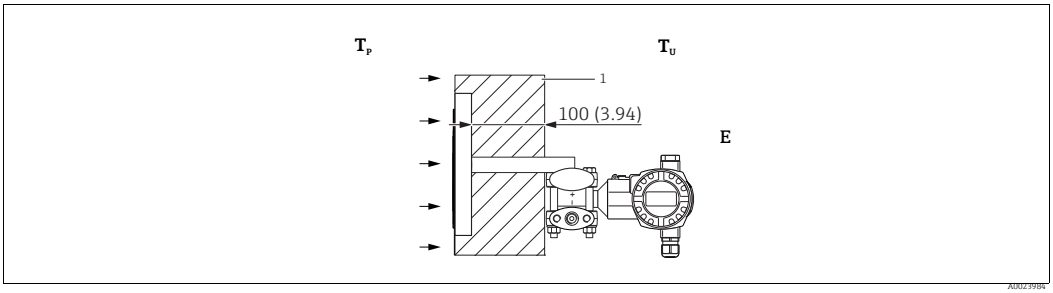

Fig. 25: Maximum insulation height

1 Insulation material

Position	Design	Ambient temperature T_U	Process temperature T_P	Option [1]
E	U-bracket, Transmitter horizontally (for devices which require a CRN approval)	≤ 70 °C (158 °F)	max. 350 °C (662 °F) , depending on the diaphragm seal filling oil used	[2]

1) Product Configurator, order code for "Process connection"

2) In combination with CSA approval.

4.3.8 Wall and pipe-mounting (optional)

Endress+Hauser offers the following mounting brackets for installing the device on pipes or walls:

Standard design	Heavy duty design
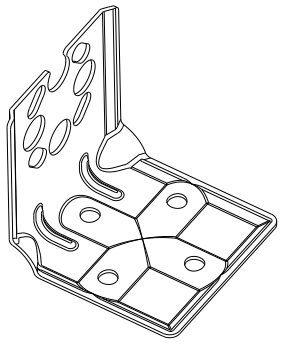 A0031326	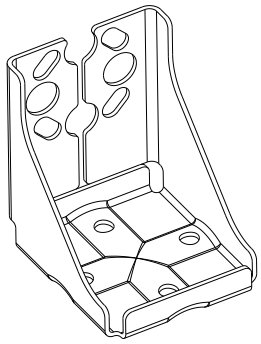 A0031327

The standard mounting bracket version is not suitable for use in an application subject to vibrations.
The vibration resistance of the reinforced version of the mounting bracket has been tested according to IEC 61298-3, see the "Vibration resistance" section in the technical documentation TI00382P.

When using a valve block, the block's dimensions must be taken into account.
Bracket for wall and pipe mounting including retaining bracket for pipe mounting and two nuts.
material of the screws used to secure the device depend on the order code.
Technical data (e.g. dimensions or order numbers for screws) see accessory document SD01553P/00/EN.

Please note the following when mounting:
- To prevent the mounting screws from scoring, lubricate them with a multi-purpose grease prior to mounting.
- In the case of pipe mounting, the nuts on the bracket must be tightened uniformly with a torque of at least 30 Nm (22.13 lbf ft).
- For installation purposes, only use the screws with item number (2) (see the following diagram).

NOTICE

Incorrect handling!

Damage of the device!

- Disassembly of the screws with item number (1) is not permissible under any circumstances and will result in loss of warranty.

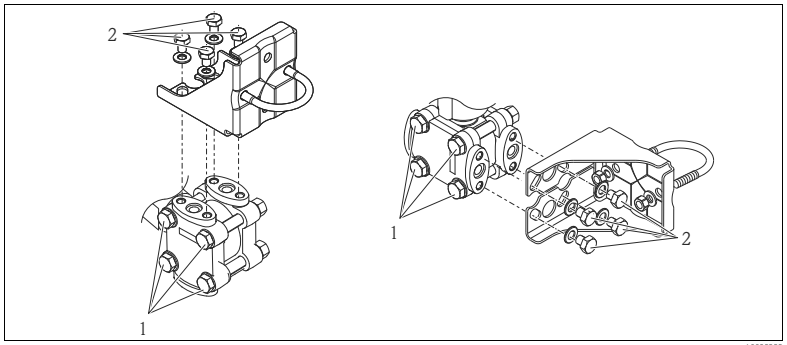

A0025335

4.3.9 Assembling and mounting the "separate housing" version

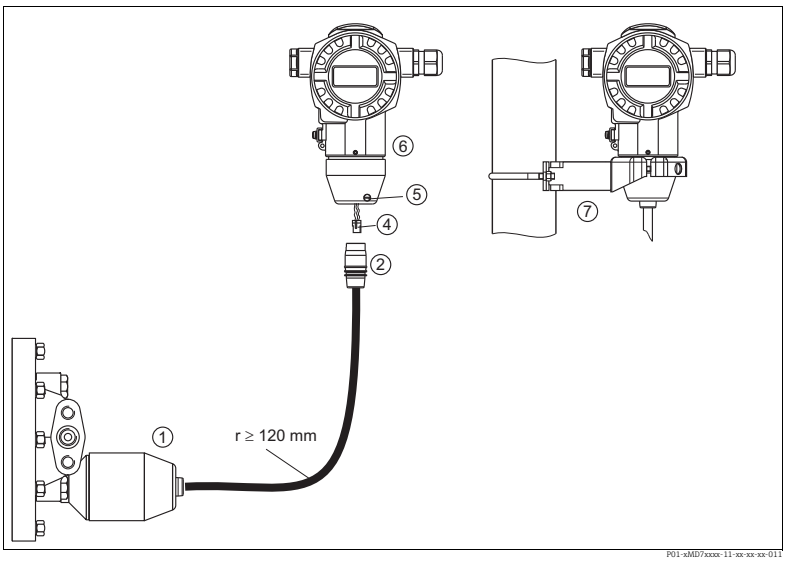

Fig. 26: "Separate housing" version

1 In the "separate housing" version, the sensor is supplied with process connection and cable fitted.
2 Cable with connection jack
4 Plug
5 Locking screw
6 Housing fitted with housing adapter, included
7 Mounting bracket suitable for wall and pipe mounting, included

Assembly and mounting

1. Connect plug (item 4) into the corresponding connection jack of the cable (item 2).
2. Plug the cable into the housing adapter (item 6).
3. Tighten the locking screw (item 5).
4. Mount the housing on a wall or pipe using the mounting bracket (item 7). When mounting on a pipe, tighten the nuts on the bracket uniformly with a torque of at least 5 Nm (3.69 lbs ft).
   Mount the cable with a bending radius (r) ≥ 120 mm (4.72 in).

4.3.10 Rotating the housing

The housing can be rotated up to 380° by loosening the Allen screw.

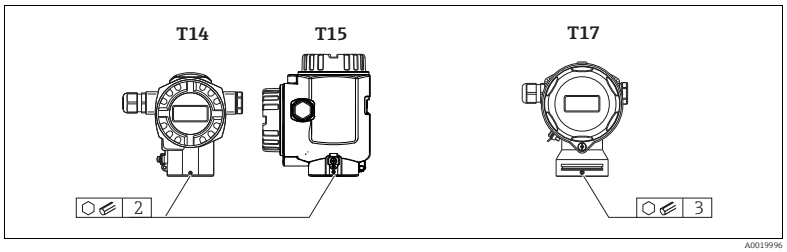

1. T14 and T15 housing: Loosen setscrew with a 2 mm (0.08 in) Allen key.
   T17 housing: Loosen setscrew with a 3 mm (0.12 in) Allen key.
2. Rotate housing (max. up to 380 °).
3. Retighten setscrew with 1 Nm (0,74 lbf ft.

4.3.11 Closing the housing cover

NOTICE

Devices with EPDM cover seal - transmitter leakiness!

Mineral-based, animal-based or vegetable-based lubricants cause the EPDM cover seal to swell and the transmitter to become leaky.

- ▶ The thread is coated at the factory and therefore does not require any lubrication.

NOTICE

The housing cover can no longer be closed.

Damaged thread!

- ▶ When closing the housing cover, please ensure that the thread of the cover and housing are free from dirt, e.g. sand.If you feel any resistance when closing the cover, check the thread on both again to ensure that they are free from dirt.

Close cover on a hygenic stainless steel housing (T17)

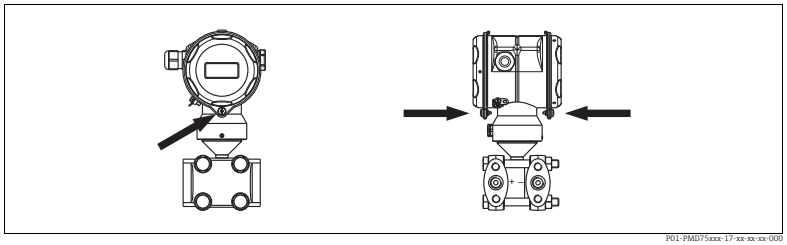

Fig. 27: Close cover

The covers for the terminal and electronics compartment are hooked into the casing and closed with a screw. These screws should be finger-tightened (2 Nm (1.48 lbf ft)) to the stop to ensure that the covers sit tightly.

4.4 Post-installation check

After installing the device, carry out the following checks:
- Are all screws firmly tightened?
- Are the housing covers screwed down tight?
- Are all locking screws and vent valves firmly tightened?

5 Wiring

5.1 Connecting the device

⚠ WARNING

Risk of electric shock!

If the operating voltage is > 35 VDC: Dangerous contact voltage at terminals.

▶ In a wet environment, do not open the cover if voltage is present.

⚠ WARNING

Limitation of electrical safety due to incorrect connection!

- Risk of electric shock and/or explosion in hazardous areas! In a wet environment, do not open the cover if voltage is present.
- When using the measuring device in hazardous areas, installation must comply with the corresponding national standards and regulations and the Safety Instructions or Installation or Control Drawings.
- Devices with integrated overvoltage protection must be earthed.
- Protective circuits against reverse polarity, HF influences and overvoltage peaks are installed.

- The supply voltage must match the supply voltage on the nameplate. (→ 10, Section 3.2.1 "Nameplate".)
- Switch off the supply voltage before connecting the device.
- Remove housing cover of the terminal compartment.
- Guide cable through the gland. Preferably use twisted, screened two-wire cable.
- Connect device in accordance with the following diagram.
- Screw down housing cover.
- Switch on supply voltage.

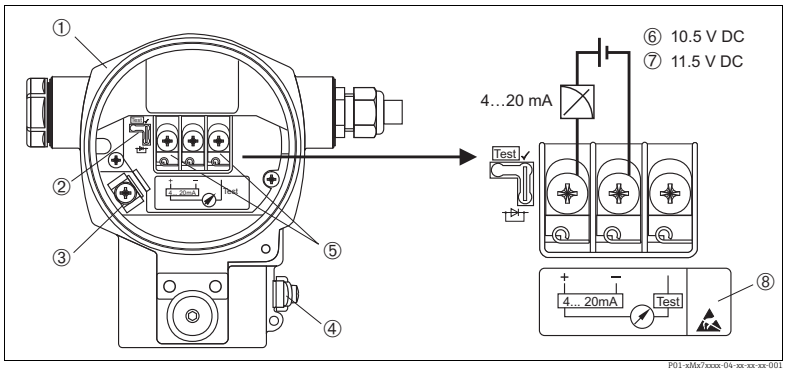

Fig. 28: Electrical connection 4...20 mA HART
→ Observe also sSection 5.2.1 "Supply voltage", → 34,.

1 *Housing*
2 *Jumper for 4...20 mA test signal.*
→ 34, Section 5.2.1 "Taking 4...20 mA test signal" part.
3 *Internal earth terminal*
4 *External earth terminal*
5 *4...20 mA test signal between plus and test terminal*
6 *minimum supply voltage = 10.5 V DC, jumper is inserted in accordance with the illustration.*
7 *minimum supply voltage = 11.5 V DC, jumper is inserted in "Test" position.*
8 *Devices with integrated overvoltage protection are labelled OVP (overvoltage protection) here.*

5.1.1 Connecting devices with Harting plug Han7D

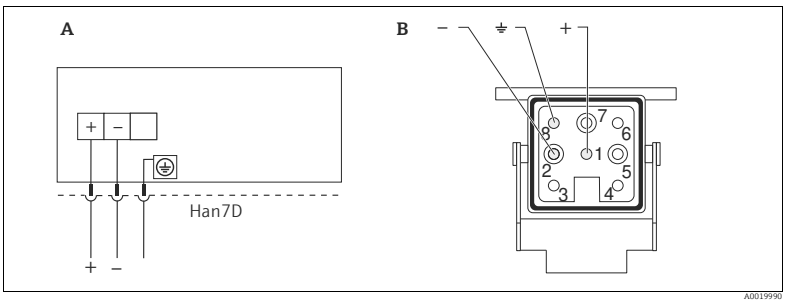

Fig. 29:

A Electrical connection for devices with Harting plug Han7D
B View of the plug connector at the device

5.1.2 Connecting devices with an M12 connector

PIN assignment for M12 connector	PIN	Meaning
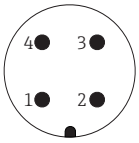	1	Signal +
	2	Not assigned
	3	Signal –
	4	Earth

5.2 Connecting the measuring unit

5.2.1 Supply voltage

⚠ WARNING

Supply voltage might be connected!

Risk of electric shock and/or explosion!

- ▶ When using the measuring device in hazardous areas, installation must comply with the corresponding national standards and regulations and the Safety Instructions or Installation or Control Drawings.
- ▶ All explosion protection data are given in separate documentation which is available upon request. The Ex documentation is supplied as standard with all devices approved for use in explosion hazardous areas.

Electronic version	Jumper for 4...20 mA test signal in "Test" position (Delivery status)	Jumper for 4...20 mA test signal in "Non-Test" position
4...20 mA HART, for non-hazardous areas	11.5...45 V DC	10.5...45 V DC

Taking 4...20 mA test signal

A 4...20 mA signal may be measured via the positive and test terminal without interrupting the measurement. The minimum supply voltage of the device can be reduced by simply changing the position of the jumper. As a result, operation is also possible with lower voltage sources. To keep the measured error below 0.1%, the current measuring device should display an internal resistance of < 0.7 Ω. Observe the position of the jumper in accordance with the following table.

Jumper position for test signal	Description
	– Taking 4...20 mA test signal via plus and test terminal: possible. (Thus, the output current can be measured without interruption via the diode.) – Delivery status – minimum supply voltage: 11.5 V DC
	– Taking 4...20 mA test signal via plus and test terminal: not possible. – minimum supply voltage: 10.5 V DC

5.2.2 Terminals

- Supply voltage and internal ground terminal: 0.5 to 2.5 mm^2 (20 to 14 AWG)
- External ground terminal: 0.5 to 4 mm^2 (20 to 12 AWG)

5.2.3 Cable specification

- Endress+Hauser recommends using twisted, screened two-wire cables.
- Cable external diameter: 5...9 mm (0.2 to 0.35 in)

5.2.4 Load

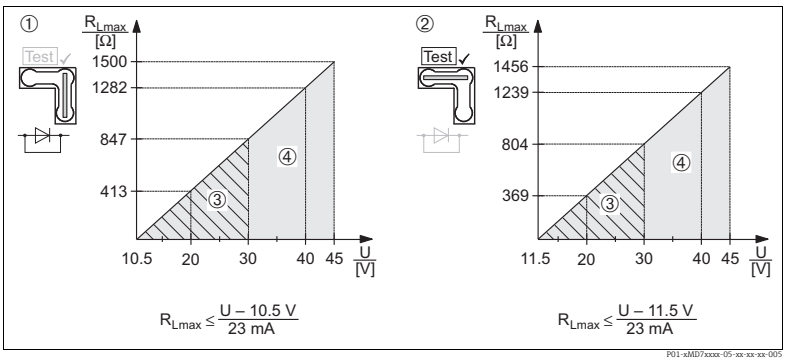

Fig. 30: Load diagram, observe the position of the jumper and the explosion protection (→ 34, Section 5.2.1 "Taking 4...20 mA test signal".)

1 Jumper for 4...20 mA test signal inserted in "Non-Test" position
2 Jumper for 4...20 mA test signal inserted in "Test" position
3 Supply voltage 10.5 (11.5)...30 V DC for 1/2 G, 1GD, 1/2 GD, FM IS, CSA IS, IECEx ia, NEPSI Ex ia
4 Supply voltage 10.5 (11.5)...45 V DC for device for non-hazardous areas, 1/2 D, 1/3 D, 2 G Ex d, 3 G Ex nA, FM XP, FM DIP, FM NI, CSA XP, CSA Dust Ex, NEPSI Ex d
R_{Lmax} Maximum load resistance
U Supply voltage

When operating via a handheld terminal or via PC with an operating program, a minimum communication resistance of 250 Ω must exist within the loop.

5.2.5 Screening/potential matching

- You achieve optimum screening against disturbances if the screening is connected on both sides (in the cabinet and on the device). If you have to reckon with potential equalisation currents in the plant, only earth screening on one side, preferably at the transmitter.
- When using in hazardous areas, you must observe the applicable regulations. Separate Ex documentation with additional technical data and instructions is included with all Ex systems as standard.

5.2.6 Connecting Field Xpert SFX100

Compact, flexible and robust industry handheld terminal for remote parametrization and measured value inspection via the HART current output (4-20mA).
For details refer to Operating Instructions BA00060S/04/EN.

5.2.7 Connecting Commubox FXA195

The Commubox FXA195 connects intrinsically safe transmitters with the HART protocol to a computer's USB port. This allows remote operation of the transmitter using Endress+Hauser's FieldCare operating program. Power is supplied to the Commubox through the USB port. The Commubox is also suitable for connection to intrinsically safe circuits. → See Technical Information TI00404F for further information.

5.2.8 Connecting Commubox FXA291/ToF Adapter FXA291 for operation via FieldCare

Connecting Commubox FXA291

The Commubox FXA291 connects Endress+Hauser field instruments with CDI interface (= Endress+Hauser Common Data Interface) to the USB interface of a personal computer or a notebook. For details refer to TI00405C/07/en.

For the following Endress+Hauser instruments you need the "ToF Adapter FXA291" as an additional accessory:

- Cerabar S PMC71, PMP7x
- Deltabar S PMD7x, FMD7x
- Deltapilot S FMB70

Connecting ToF Adapter FXA291

The ToF Adapter FXA291 connects the Commubox FXA291 via the USB interface of a personal computer or a notebook to the following Endress+Hauser instruments:

- Cerabar S PMC71, PMP7x
- Deltabar S PMD7x, FMD7x
- Deltapilot S FMB70

For details refer to KA0271F/00/a2.

5.3 Potential matching

Ex applications: Connect all devices to the local potential matching.
Observe the applicable regulations.

5.4 Overvoltage protection (optional)

NOTICE

Device could be destroyed!
Devices with integrated overvoltage protection must be earthed.

Devices showing version "M" in feature 100 "Additional options 1" or feature 110 "Additional options 2" in the order code are equipped with overvoltage protection (see also Technical Information TI00382P "Ordering information".

- Overvoltage protection:
  - Nominal functioning DC voltage: 600 V
  - Nominal discharge current: 10 kA
- Surge current check î = 20 kA as per DIN EN 60079-14: 8/20 µs satisfied
- Arrester AC current check I = 10 A satisfied

5.5 Post-connection check

Perform the following checks after completing electrical installation of the device:

- Does the supply voltage match the specifications on the nameplate?
- Is the device connected as per section 5.1?
- Are all screws firmly tightened?
- Are the housing covers screwed down tight?

As soon as voltage is applied to the device, the green LED on the electronic insert lights up for a few seconds or the connected on-site display lights up.

6 Operation

Feature 20 "Output; operation" in the order code provides you with information on the operating options available to you.

6.1 On-site display (optional)

A 4-line liquid crystal display (LCD) is used for display and operation. The on-site display shows measured values, dialog texts, fault messages and notice messages.
The display of the device can be turned in 90° steps.
Depending on the installation position of the device, this makes it easy to operate the device and read the measured values.

Functions:
- 8-digit measured value display including sign and decimal point, bargraph for current display
- simple and complete menu guidance thanks to separation of the parameters into several levels and groups
- each parameter is given a 3-digit ID number for easy navigation
- option for configuring the display according to individual requirements and desires, such as language, alternating display, contrast setting, display of other measured values such as sensor temperature
- comprehensive diagnostic functions (fault and warning message, peak-hold indicators, etc.)
- rapid and safe commissioning with the Quick Setup menus

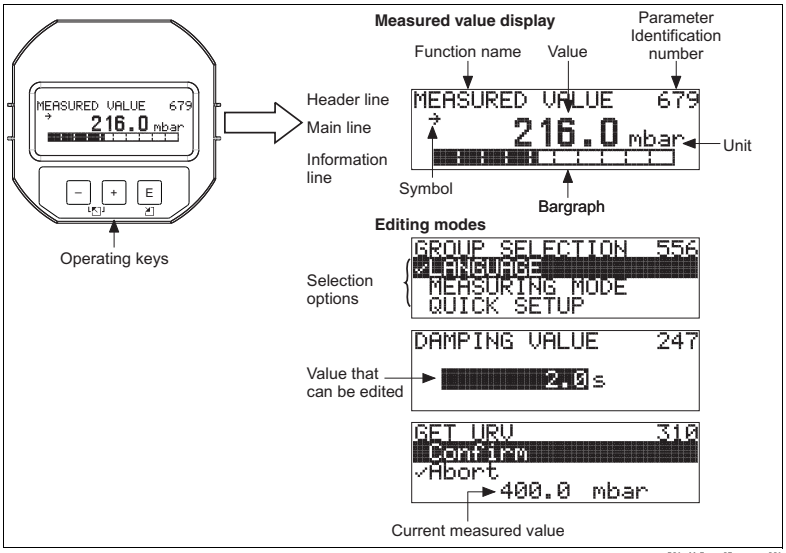

The following table illustrates the symbols that can appear on the on-site display. Four symbols can occur at one time.

Symbol	Meaning
	Alarm symbol – Symbol flashing: warning, device continues measuring. – Symbol permanently lit: error, device does not continue measuring. *Note:* The alarm symbol may overlie the tendency symbol.
	Lock symbol The operation of the device is locked. Unlock device, → 52.
	Communication symbol Data transfer via communication *Note:* The alarm symbol may overlie the communication symbol.
	Square root symbol Active measuring mode "Flow measurement" The root flow signal is used for the current output.
	Tendency symbol (increasing) The measured value is increasing.
	Tendency symbol (decreasing) The measured value is decreasing.
	Tendency symbol (constant) The measured value has remained constant over the past few minutes.

6.2 Operating elements

6.2.1 Position of operating elements

With regard to aluminium housings (T14/T15) and stainless steel housing (T14), the operating keys are located either outside the device under the protection cap or inside on the electronic insert. In hygenic stainless housings (T17), the operating keys are always located inside on the electronic insert.

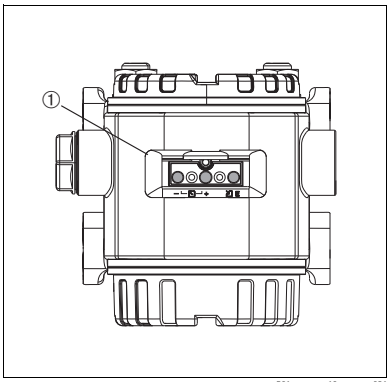

Fig. 31: Operating keys, external

1 Operating keys on the exterior of the device under the protective flap

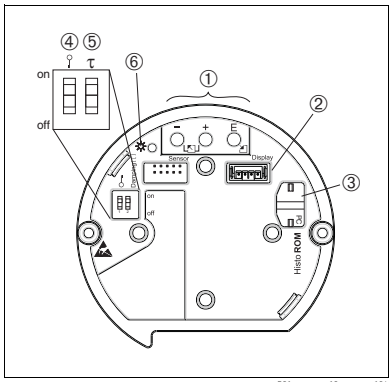

Fig. 32: Operating keys, internal

1 Operating keys
2 Slot for optional display
3 Slot for optional HistoROM®/M-DAT
4 DIP-switch for locking/unlocking measured-value-relevant parameters
5 DIP-switch for damping on/off
6 Green LED to indicate value being accepted

6.2.2 Function of the operating elements – on-site display not connected

Press and hold the key or the key combination for at least 3 seconds to execute the corresponding function. Press the key combination for at least 6 seconds for a reset.

Operating key(s)	Meaning
–	Adopt lower range value. A reference pressure is present at the device. → 42, Section 6.3.1 "Pressure measuring mode", → 43, Section 6.3.2 "Level measuring mode" or → 45, Section 6.3.3 "Flow measuring mode (not for 160 bar and 250 bar)".
+	Adopt upper range value. A reference pressure is present at the device. → 42, Section 6.3.1 "Pressure measuring mode", → 43, Section 6.3.2 "Level measuring mode" or → 45, Section 6.3.3 "Flow measuring mode (not for 160 bar and 250 bar)".
E	Position adjustment
+ and – and E	Reset all parameters. The reset via operating keys corresponds to the software reset code 7864.
+ and E	Copy the configuration data from the optional HistoROM®/M-DAT module to the device.
– and E	Copy the configuration data from the device to the optional HistoROM®/M-DAT module.
on 1 2 off P01-xxxxxxxx-19-xx-xx-xx-057	– DIP-switch 1: for locking/unlocking measured-value-relevant parameters Factory setting: off (unlocked) – DIP-switch 2: damping on/off, Factory setting: on (damping on)

6.2.3 Function of the operating elements – on-site display connected

Operating key(s)	Meaning
+	– Navigate upwards in the picklist – Edit the numerical values and characters within a function
–	– Navigate downwards in the picklist – Edit the numerical values and characters within a function
E	– Confirm entry – Jump to the next item
+ and E	Contrast setting of on-site display: darker
– and E	Contrast setting of on-site display: brighter
+ and –	ESC functions: – Exit edit mode without saving the changed value. – You are in a menu within a function group. The first time you press the keys simultaneously, you go back a parameter within the function group. Each time you press the keys simultaneously after that, you go up a level in the menu. – You are in a menu at a selection level. Each time you press the keys simultaneously, you go up a level in the menu. *Note:* The terms function group, level and selection level are explained in section 6.4.1, page 46.

6.3 On-site operation – on-site display not connected

To operate the device with a HistoROM®/M-DAT module → 49, Section 6.5 "HistoROM®/M-DAT (optional)".

6.3.1 Pressure measuring mode

If no on-site display is connected, the following functions are possible by means of the three keys on the electronic insert or on the exterior of the device:
- Position adjustment (zero point correction)
- Setting lower range value and upper range value
- Device reset, → 40, Section 6.2.2 "Function of the operating elements – on-site display not connected", Table.

- The operation must be unlocked. → 52, Section 6.8 "Locking/unlocking operation".
- The device is configured for the Pressure measuring mode as standard. You can switch measuring modes by means of the MEASURING MODE parameter. → 55, Section 7.3 "Selecting language and measuring mode".
- The pressure applied must be within the nominal pressure limits of the sensor. See information on the nameplate.

⚠ WARNING
Changing the measuring mode can affect the adjustment data!
This situation can result in product overflow.
▶ Check calibration data when the measuring mode is changed.

Carry out position adjustment.[1]		Setting lower range value.		Setting upper range value.	
Pressure is present at device.		Desired pressure for lower range value is present at device.		Desired pressure for upper range value is present at device.	
↓		↓		↓	
Press E-key for 3 s.		Press ⊟-key for 3 s.		Press ⊞-key for 3 s.	
↓		↓		↓	
Does the LED on the electronic insert light up briefly?		Does the LED on the electronic insert light up briefly?		Does the LED on the electronic insert light up briefly?	
Yes	No	Yes	No	Yes	No
↓	↓	↓	↓	↓	↓
Applied pressure for position adjustment has been accepted.	Applied pressure for position adjustment has not been accepted. Observe the input limits.	Applied pressure for lower range value has been accepted.	Applied pressure for lower range value has not been accepted. Observe the input limits.	Applied pressure for upper range value has been accepted.	Applied pressure for upper range value has not been accepted. Observe the input limits.

1) Observe "Warning" on page 55 in Chapter 7 "Commissioning".

6.3.2 Level measuring mode

If no on-site display is connected, the following functions are possible by means of the three keys on the electronic insert or on the exterior of the device:

- Position adjustment (zero point correction)
- Assign the lower and upper pressure value to the lower and upper level value
- Device reset, → 40, Section 5.2.3 "Function of the operating elements – on-site display not connected", Table.

- The "-" and ⊞- keys only have a function in the following cases:
  - LEVEL SELECTION "Level Easy Pressure", CALIBRATION MODE "Wet"
  - LEVEL SELECTION "Level Standard", LEVEL MODE "Linear", CALIBRATION MODE "Wet"

  The keys have no function in other settings.
- The device is configured for the Pressure measuring mode as standard. You can switch measuring modes by means of the MEASURING MODE parameter. → 55, Section 7.3 "Selecting language and measuring mode".
  The following parameters are set to the following values in the factory:
  - LEVEL SELECTION: Level Easy Pressure
  - CALIBRATION MODE: Wet
  - OUTPUT UNIT or LIN. MEASURAND: %
  - EMPTY CALIB.: 0.0
  - FULL CALIB.: 100.0.
  - SET LRV: 0.0 (corresponds to 4 mA value)
  - SET URV: 100.0 (corresponds to 20 mA value)

  These parameters can only be modified by means of the on-site display or remote operation such as the FieldCare.
- The operation must be unlocked. → 52, Section 6.8 "Locking/unlocking operation".
- The pressure applied must be within the nominal pressure limits of the sensor. See information on the nameplate.
- → 61, Section 7.6 "Level measurement". For parameter description see Operating Instructions BA00274P.
- LEVEL SELECTION, CALIBRATION MODE, LEVEL MODE, EMPTY CALIB., FULL CALIB, SET LRV and SET URV are parameter names used for on-site display or remote operation such as FieldCare for instance.

⚠ WARNING

Changing the measuring mode can affect the adjustment data!

This situation can result in product overflow.

▶ Check calibration data when the measuring mode is changed.

Carry out position adjustment.[1]		**Setting lower pressure value.**		**Setting upper pressure value.**	
Pressure is present at device.		Desired pressure for lower pressure value (EMPTY PRESSURE[2]) is present at device.		Desired pressure for upper pressure value (FULL PRESSURE[1]) is present at device.	
↓		↓		↓	
Press E-key for 3 s.		Press ⊟-key for 3 s.		Press ⊞-key for 3 s.	
↓		↓		↓	
Does the LED on the electronic insert light up briefly?		Does the LED on the electronic insert light up briefly?		Does the LED on the electronic insert light up briefly?	
Yes	No	Yes	No	Yes	No
↓	↓	↓	↓	↓	↓
Applied pressure for position adjustment has been accepted.	Applied pressure for position adjustment has not been accepted. Observe the input limits.	The pressure present was saved as the lower pressure value (EMPTY PRESSURE[2]) and assigned to the lower level value (EMPTY CALIB.[2]).	The pressure present was not saved as the lower pressure value. Observe the input limits.	The pressure present was saved as the upper pressure value (FULL PRESSURE[2]) and assigned to the upper level value (FULL CALIB.[2]).	The pressure present was not saved as the upper pressure value. Observe the input limits.

1) Observe "Warning" on page 55 in Chapter 7 "Commissioning".

2) Parameter name used for the on-site display or remote operation such as the FieldCare.

6.3.3 Flow measuring mode (not for 160 bar and 250 bar)

If no on-site display is connected, the following functions are possible by means of the three keys on the electronic insert or on the exterior of the device:

- Position adjustment (zero point correction)
- Assign the maximum pressure value to the maximum flow value
- Device reset, → 40, Section 6.2.2 "Function of the operating elements – on-site display not connected", Table.

- The operation must be unlocked. → 52, Section 6.8 "Locking/unlocking operation".
- The device is configured for the Pressure measuring mode as standard. You can switch measuring modes by means of the MEASURING MODE parameter. → 55, Section 7.3 "Selecting language and measuring mode".
- The "-"- key does not have any function.
- The pressure applied must be within the nominal pressure limits of the sensor. See information on the nameplate.
- → 60, Section 7.5.3 "Quick Setup menu for the Flow measuring mode" and Operating Instructions BA00274P, parameter descriptions MAX. PRESS. FLOW, MAX. FLOW, SET LRV – Flow and LINEAR/SQROOT.

⚠ WARNING

Changing the measuring mode can affect the adjustment data!

This situation can result in product overflow.

▶ Check calibration data when the measuring mode is changed.

Carry out position adjustment.[1]		**Setting maximum pressure value.**	
Pressure is present at device.		Desired pressure for the maximum pressure value (MAX. FLOW[2]) is present at device.	
↓		↓	
Press E-key for 3 s.		Press ⊞-key for 3 s.	
↓		↓	
Does the LED on the electronic insert light up briefly?		Does the LED on the electronic insert light up briefly?	
Yes	No	Yes	No
↓	↓	↓	↓
Applied pressure for position adjustment has been accepted.	Applied pressure for position adjustment has not been accepted. Observe the input limits.	The pressure present was saved as the maximum pressure value (MAX. PRESS FLOW[2]) and assigned to the maximum flow value (MAX. FLOW.[2]).	The pressure present was not saved as the maximum pressure value. Observe the input limits.

1) Observe "Warning" on page 55 in Chapter 7 "Commissioning".

2) Parameter name used for the on-site display or remote operation such as the FieldCare.

6.4 On-site operation – on-site display connected

If the on-site display is connected, the three operating keys are used to navigate through the operating menu and parameter input, → 41, Section 6.2.3 "Function of the operating elements – on-site display connected".

6.4.1 General structure of the operating menu

The menu is split into four levels. The three upper levels are used to navigate while you use the bottom level to enter numerical values, select options and save settings.
The entire operating menu is shown in the operating instructions BA00274P "Cerabar S/ Deltabar S/Deltapilot S, Description of Instrument Functions".
The structure of the OPERATING MENU depends on the measuring mode selected, e.g. if the "Pressure" measuring mode is selected, only the functions necessary for this mode are displayed.

6.4.2 Selecting an option

Example: select "English" as the language of the menu.

On-site display	Operation
	German is selected as the language. A ✔ in front of the menu text indicates the active option.
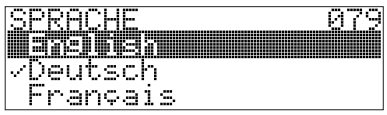	Select English with ⊞ or ⊟.
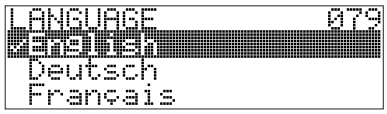	1. Confirm your choice with Ⓔ. A ✔ in front of the menu text indicates the active option. (English is now selected as the menu language.) 2. Jump to the next item with Ⓔ.

6.4.3 Editing a value

Example: adjusting DAMPING VALUE function from 2.0 s to 30.0 s. → 📄 41, Section 6.2.3 "Function of the operating elements – on-site display connected".

On-site display	Operation
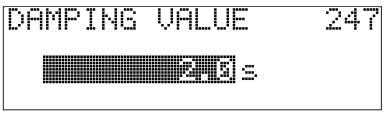	The on-site display shows the parameter to be changed. The value highlighted in black can be changed. The "s" unit is fixed and cannot be changed.
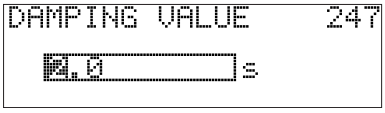	1. Press ⊞ or ⊟ to get to the editing mode. 2. The first digit is highlighted in black.
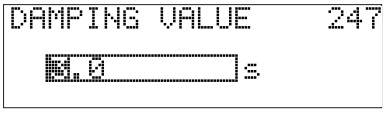	1. Use ⊞ to change "2" to "3". 2. Confirm "3" with Ⓔ. The cursor jumps to the next position (highlighted in black).
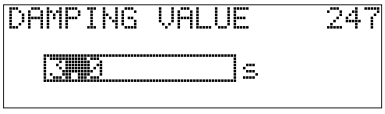	The decimal point is highlighted in black, i.e. you can now edit it.
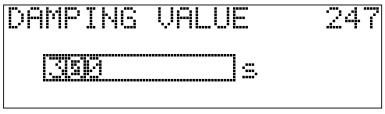	1. Keep pressing ⊞ or ⊟ until "0" is displayed. 2. Confirm "0" with Ⓔ. The cursor jumps to the next position. ↵ is displayed and is highlighted in black. → See next graphic.
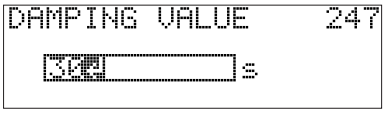	Use Ⓔ to save the new value and exit the editing mode. → See next graphic.
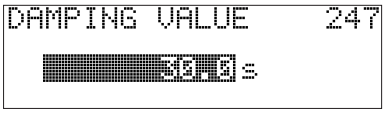	The new value for the damping is now 30.0 s. – Jump to the next parameter with Ⓔ. – You can get back to the editing mode with ⊞ or ⊟.

6.4.4 Taking pressure applied at device as value

Example: configuring upper range value – assign 20 mA to the pressure value 400 mbar.

On-site display	Operation
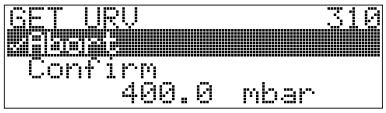 P01-xxxxxxxx-19-xx-xx-xx-035	The bottom line on the on-site display displays the pressure present, here 400 mbar.
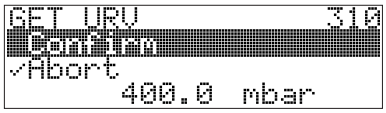 P01-xxxxxxxx-19-xx-xx-xx-036	Use ⊞ or ⊟ to switch to the "Confirm" option. The active selection is highlighted in black.
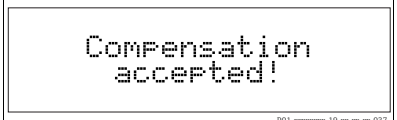 P01-xxxxxxxx-19-xx-xx-xx-037	Use Ⓔ to assign the value (400 mbar) to the GET URV parameter. The device confirms the calibration and jumps back to the parameter, here GET URV (see next graphic).
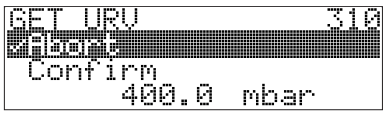 P01-xxxxxxxx-19-xx-xx-xx-035	Switch to the next parameter with Ⓔ.

6.5 HistoROM®/M-DAT (optional)

NOTICE

Device could be destroyed!
Detach HistoROM®/M-DAT from the electronic insert or attach it to the insert in a deenergised state only.

HistoROM®/M-DAT is a memory module, which is attached to the electronic insert and fulfils the following functions:
- Back-up copy of configuration data
- Copying configuration data of a transmitter into another transmitter
- Cyclic recording of pressure and sensor-temperature measured values
- Recording diverse events, such as alarms, configuration changes, counters for measuring range undershooting and exceeding for pressure and temperature, exceeding and undershooting the user limits for pressure and temperature, etc.

- The HistoROM®/M-DAT module may be retrofitted at any time (Order No.: 52027785).
- The HistoROM data and the data in the device are analysed once a HistoROM®/M-DAT is attached to the electronic insert and power is reestablished to the device. During the analysis, the messages "W702, HistoROM data not consistent" and "W706, Configuration in HistoROM and device not identical" can occur. For measures, → 71, Section 9.1 "Messages."

6.5.1 Copying configuration data

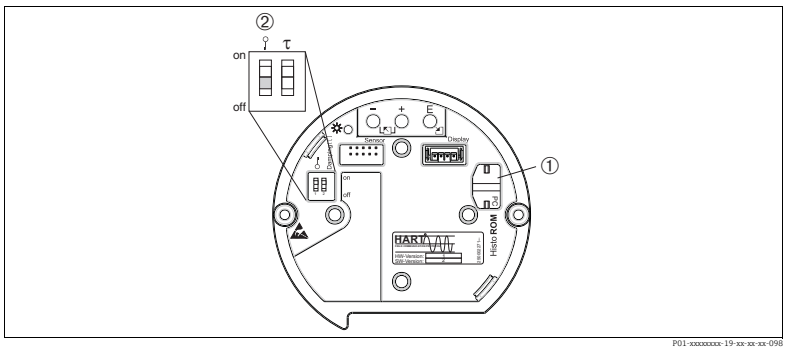

Abb. 33: Electronic insert with optional HistoROM®/M-DAT memory module

1 optional HistoROM®/M-DAT
2 To copy configuration data from the HistoROM®/M-DAT module to a device or from a device to a HistoROM®/M-DAT,, the operation must be unlocked DIP-switch 1, Position "off" ,parameter INSERT PIN NO. = 100). Observe page 52, section 6.8 "Locking/unlocking operation".

On-site operation – on-site display not connected

Copying configuration data from a device to a HistoROM®/M-DAT module:
The operation must be unlocked.

1. Disconnect device from supply voltage.
2. Attach the HistoROM®/M-DAT module to the electronic insert.
3. Reestablish supply voltage to the device.
4. Press Ⓔ and "-"-keys (for at least 3 seconds) until the LED on the electronic insert lights up.
5. Wait approx. 20 seconds. Configuration data are loaded from the device to the HistoROM®/M-DAT. The device is not restarted.
6. Before removing the HistoROM®/M-DAT again from the electronic insert, disconnect the device from supply voltage.

Copying configuration data from a HistoROM®/M-DAT to a device:
The operation must be unlocked.

1. Disconnect device from supply voltage.
2. Attach the HistoROM®/M-DAT module to the electronic insert. Configuration data from another device are stored in the HistoROM®/M-DAT.
3. Reestablish supply voltage to the device.
4. Press Ⓔ und ⊞-keys (for at least 3 seconds) until the LED on the electronic insert lights up.
5. Wait approx. 20 seconds. All parameters except DEVICE SERIAL No, DEVICE DESIGN., CUST. TAG NUMBER, LONG TAG NUMBER, DESCRIPTION, BUS ADDRESS, CURRENT MODE and the parameters in the POSITION ADJUSTMENT and PROCESS CONNECTION group are loaded into the device by HistoROM®/M-DAT. The device is restarted.
6. Before removing the HistoROM®/M-DAT again from the electronic insert, disconnect the device from supply voltage.

On-site operation via on-site display (optional) or remote operation

Copying configuration data from a device to a HistoROM®/M-DAT:
The operation must be unlocked.

1. Disconnect device from supply voltage.
2. Attach the HistoROM®/M-DAT module to the electronic insert.
3. Reestablish supply voltage to the device.
4. Using the HistoROM CONTROL parameter select the option "Device → HistoROM" as the data transfer direction (Menu path: GROUPSELECTION → OPERATING MENU → OPERATION).
   The DOWNLOAD SELECT. parameter setting has no influence on an upload from the device into HistoROM.
5. Wait approx. 20 seconds. Configuration data are loaded from the device to the HistoROM®/M-DAT. The device is not restarted.
6. Before removing the HistoROM®/M-DAT again from the electronic insert, disconnect the device from supply voltage.

Copying configuration data from a HistoROM®/M-DAT to a device:
The operation must be unlocked.

1. Disconnect device from supply voltage.
2. Attach the HistoROM®/M-DAT module to the electronic insert. Configuration data from another device are stored in the HistoROM®/M-DAT.
3. Reestablish supply voltage to the device.
4. Use the DOWNLOAD SELECT parameter to select which parameters are to be overwritten (Menu path: (GROUPS SELECTION →) OPERATING MENU → OPERATION).

   The following parameters are overwritten according to the selection:
   - **Configuration copy (factory setting):**
     all parameters except DEVICE SERIAL No., DEVICE DESIGN, CUST. TAG NUMBER, LONG TAG NUMBER, DESCRIPTION, BUS ADDRESS, CURRENT MODE and the parameters in the POSITION ADJUSTMENT, PROCESS CONNECTION, CURR. TRIM (SERVICE /SYSTEM 2), SENSOR TRIM and SENSOR DATA group.
   - **Device replacement:**
     all parameters except DEVICE SERIAL No., DEVICE DESIGN and the parameters in the POSITION ADJUSTMENT, PROCESS CONNECTION, CURR. TRIM (SERVICE/SYSTEM 2), SENSOR TRIM and SENSOR DATA group.
   - **Electronics replace**:
     all parameters except the parameters in the CURR. TRIM (SERVICE/SYSTEM 2) and SENSOR DATA group.

   Factory setting: Configuration copy
5. Using the HistoROM CONTROL parameter select the option "HistoROM → Device" as the data transfer direction.
   (Menu path: GROUP SELECTION → OPERATING MENU → OPERATION)
6. Wait approx. 20 seconds. Configuration data are loaded from the device to the HistoROM®/M-DAT. The device is restarted.
7. Before removing the HistoROM®/M-DAT again from the electronic insert, disconnect the device from supply voltage.

6.6 Operation via SFX100

Compact, flexible and robust industry handheld terminal for remote parametrization and measured value inspection via the HART current output (4-20mA).
For details refer to Operating Instructions BA00060S/04/EN.

6.7 FieldCare

FieldCare is an FDT-based system asset management tool from Endress+Hauser. With FieldCare, you can configure all Endress+Hauser devices as well as devices from other manufacturers that support the FDT standard. Hardware and software requirements you can find on the internet: www.endress.com → select your country → Search: FieldCare → FieldCare → Technical Data.

FieldCare supports the following functions:
- Configuration of transmitters in online operation
- Loading and saving device data (upload/download)
- HistoROM®/M-DAT analysis
- Documentation of the measuring point

Connection options:
- HART via Commubox FXA195 and the USB interface of a computer
- HART via Fieldgate FXA520
- Commubox FXA291 with ToF Adapter FXA291 via service interface

- → 35, Section 5.2.7 "Connecting Commubox FXA195".
- In the "Level Standard" measuring mode, the configuration data that were loaded with FDT upload cannot be written again (FDT download). These data are only used to document the measuring point.
- Further information on the FieldCare can be found on the Internet (http://www.endress.com, Download → Search for: FieldCare).

6.8 Locking/unlocking operation

Once you have entered all the parameters, you can lock your entries against unauthorised and undesired access.

You have the following possibilities for locking/unlocking the operation:
- Via a DIP-switch on the electronic insert, locally on the display.
- Via the on-site display (optional)
- Via digital communication.

The -symbol on the on-site display indicates that operation is locked. Parameters which refer to how the display appears, e.g. LANGUAGE and DISPLAY CONTRAST can still be altered.

- If operation is locked by means of the DIP-switch, you can only unlock operation again by means of the DIP-switch. If operation is locked by means of the on-site display or remote operation e.g. FieldCare, you can only unlock operation again by means of the on-site display or remote operation.

The table provides an overview of the locking functions:

Locking via	View/read parameter	Modify/write via[1]		Unlocking via		
		On-site display	Remote operation	DIP-switch	On-site display	Remote operation
DIP-switch	Yes	No	No	Yes	No	No
On-site display	Yes	No	No	No	Yes	Yes
Remote operation	Yes	No	No	No	Yes	Yes

1) Parameters which refer to how the display appears, e.g. LANGUAGE and DISPLAY CONTRAST can still be altered.

6.8.1 Locking/unlocking operation locally via DIP-switch

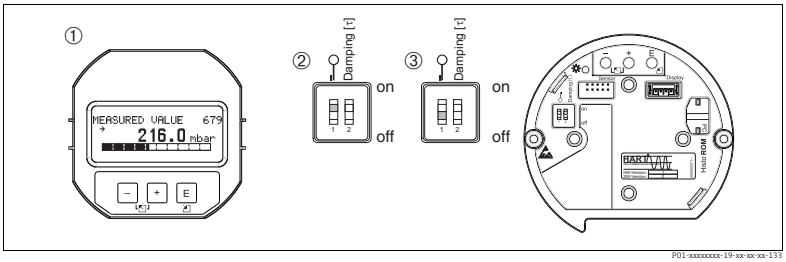

Fig. 34: DIP-switch position "Hardware locking" on the electronic insert

1 If necessary, remove on-site display (optional)
2 DIP-switch is at "on": operation is locked.
3 DIP-switch is at "off": operation is unlocked (operation possible)

6.8.2 Locking/unlocking operation via on-site display or remote operation

	Description
Locking operation	1. Select INSERT PIN NO. parameter, Menu path: OPERATING MENU → OPERATION → INSERT PIN NO. 2. To lock operation, enter a number for this parameter between 0...9999 that is ≠100.
Unlocking operation	1. Select INSERT PIN NO. parameter. 2. To unlock operation, enter "100" for the parameter.

6.9 Factory setting (reset)

By entering a certain code, you can completely, or partially, reset the entries for the parameters to the factory settings. (→ For factory settings refer to the Operating Instructions BA00274P "Cerabar S/Deltabar S/Deltapilot S, Description of device functions".) Enter the code by means of the ENTER RESET CODE parameter (Menu path: (GROUP SELECTION →) OPERATING MENU → OPERATING).
There are various reset codes for the device. The following table illustrates which parameters are reset by the particular reset codes. Operation must be unlocked to reset parameters (→ 🗎 53, Section 6.9).

Any customer-specific configuration carried out by the factory is not affected by a reset (customer-specific configuration remains). If, after a reset, you wish the parameters to be reset to the factory settings, please contact Endress+Hauser Service.

Reset code	Description and effect
1846	**Display reset** – This reset resets all parameters which have to do with how the display appears (DISPLAY group). – Any simulation which may be running is ended. – The device is restarted.
62	**PowerUp reset (warm start)** – This reset resets all the parameters in the RAM. Data are read back anew from the EEPROM (processor is initialised again). – Any simulation which may be running is ended. – The device is restarted.
2710	**Measuring mode level reset** – Depending on the settings for the LEVEL MODE, LIN MEASURAND, LINdMEASURAND or COMB. MEASURAND parameters, the parameters needed for this measuring task will be reset. – Any simulation which may be running is ended. – The device is restarted. Example LEVEL MODE = linear and LIN. MEASURAND = Height ▪ HEIGHT UNIT = m ▪ CALIBRATION MODE = wet ▪ EMPTY CALIB. = 0 ▪ FULL CALIB. = Sensor end value converted to mH_2O, e.g. 5.099 mH_2O for a 500 mbar (7,5 psi) sensor

333	**User reset**
	– Affects the following parameters:
	  – Function group POSITION ADJUSTMENT
	  – Function group BASIC SETUP, except for the customer-specific units
	  – Function group EXTENDED SETUP
	  – Function group TOTALIZER SETUP
	  – Group OUTPUT
	  – Function group HART DATA: CURRENT MODE, BUS ADDRESS and PREAMBLE NUMBER
	– Any simulation which may be running is ended.
	– The device is restarted.

7864	**Total reset**
	– Affects the following parameters:
	  – Function group POSITION ADJUSTMENT
	  – Function group BASIC SETUP
	  – Function group EXTENDED SETUP
	  – Function group LINEARISATION (an existing linearisation table is erased)
	  – Function group TOTALIZER SETUP
	  – Group OUTPUT
	  – Function group PEAK HOLD INDICATOR
	  – Function group HART DATA
	  – All configurable messages ("Error" type) are set to factory setting. → 71, Section 9.1 "Messages" and page → 79, Section 9.2 "Response of outputs to errors".
	  – Function group USER LIMITS
	  – Function group SYSTEM 2
	– Any simulation which may be running is ended.
	– The device is restarted.

8888	**HistoROM reset** The measured value memory and event memory are cleared. During the reset, the HistoROM must be attached to the electronic insert.

7 Commissioning

The device is configured for the Pressure measuring mode as standard. The measuring range and the unit in which the measured value is transmitted correspond to the specifications on the nameplate.

⚠ WARNING

Exceeding the maximum allowable working pressure!

Risk of injury due to bursting of parts!

▶ Use the device only within the sensor range limits

NOTICE

Shortfall/exceeding of the allowable differential pressure!

Output of messages if differential pressure is too low or to high.

▶ If a differential pressure smaller than the minimum permitted differential pressure is present at the device, the messages "E120 Sensor low pressure" and "E727 Sensor pressure error - overrange" are output in succession! Use the device only within the sensor range limits

▶ If a differential pressure greater than the maximum permitted differential pressure is present at the device, the messages "E115 Sensor overpressure" and "E727 Sensor pressure error - overrange" are output in succession! Use the device only within the sensor range limits

7.1 Configuring messages

- Messages E727, E115 and E120 are "Error"-type messages and can be configured as a "Warning" or an "Alarm". These messages are configured as "Warning" messages at the factory. This setting prevents the current output from assuming the set alarm current value for applications (e.g. cascade measurement) where the user is consciously aware of the fact that the sensor range can be exceeded
- We recommend setting messages E727, E115 and E120 to "Alarm" in the following instances:
  - The sensor range does not have to be exceeded for the measuring application.
  - Position adjustment has to be carried out that has to correct a large measured error as a result of the orientation of the device (e.g. devices with a diaphragm seal).

7.2 Function check

Carry out a post-installation and a post-connection check as per the checklist before commissioning the device.

- "Post-installation check" checklist → see Section 4.4
- "Post-connection check" checklist → see Section 5.5

7.3 Selecting language and measuring mode

7.3.1 On-site operation

The LANGUAGE and MEASURING MODE parameters are located on the top menu level.

The following measuring modes are available:
- Pressure
- Level
- Flow (not for 160 bar and 250 bar)

7.3.2 Digital communication

The following measuring modes are available:
- Pressure
- Level
- Flow (not for 160 bar and 250 bar)

The LANGUAGE parameter is arranged in the DISPLAY group (OPERATING MENU → DISPLAY).
- Use the LANGUAGE parameter to select the menu language for the on-site display.
- Select the menu language for FieldCare by means of the "Language" Button in the configuration window. Select the menu language for the FieldCare frame via the "Extras" menu → "Options" → "Display" → "Language".

7.4 Position adjustment

Due to the orientation of the device, there may be a shift in the measured value, i.e. when the container is empty, the measured value parameter does not display zero. There are three options to choose from when performing position adjustment.
(Menu path: (GROUP SELECTION →) OPERATING MENU → SETTINGS → POSITION ADJUSTMENT)

Parameter name	Description
POS. ZERO ADJUST (685) Entry	Position adjustment – the pressure difference between zero (set point) and the measured pressure need not be known. **Example:** – MEASURED VALUE = 2.2 mbar (0,032 psi) – Correct the MEASURED VALUE via the POS. ZERO ADJUST parameter with the "Confirm" option. This means that you are assigning the value 0.0 to the pressure present. – MEASURED VALUE (after pos. zero adjust) = 0.0 mbar – The current value is also corrected. The CALIB. OFFSET parameter displays the resulting pressure difference (offset) by which the MEASURED VALUE was corrected. **Factory setting:** 0.0
POS. INPUT VALUE (563) Entry	Position adjustment – the pressure difference between zero (set point) and the measured pressure need not be known. To correct the pressure difference, you need a reference measurement value (e. g. from a reference device). **Example:** – MEASURED VALUE = 0.5 mbar (0,0073 psi) – For the POS. INPUT VALUE parameter, specify the desired set point for the MEASURED VALUE, e.g. 2.0 mbar (0,029 psi). ($MEASURED\ VALUE_{new}$ = POS. INPUT VALUE) – MEASURED VALUE (after entry for POS. INPUT VALUE) = 2.0 mbar (0,029 psi) – The CALIB. OFFSET parameter displays the resulting pressure difference (offset) by which the MEASURED VALUE was corrected. CALIB. OFFSET = $MEASURED\ VALUE_{old}$ – POS. INPUT VALUE, here: CALIB. OFFSET = 0.5 mbar (0,0073 psi) – 2.0 mbar (0,029 psi) = – 1.5 mbar (0,022 psi)) – The current value is also corrected. **Factory setting:** 0.0

Parameter name	Description
CALIB. OFFSET (319) Entry	Position adjustment – the pressure difference between zero (set point) and the measured pressure is known. **Example:** – MEASURED VALUE = 2.2 mbar (0,032 psi) – Via the CALIB. OFFSET parameter, enter the value by which the MEASURED VALUE should be corrected. To correct the MEASURED VALUE to 0.0 mbar, you must enter the value 2.2 here. (MEASURED VALUE $_{new}$ = MEASURED VALUE$_{old}$ – CALIB. OFFSET) – MEASURED VALUE (after entry for calib. offset) = 0.0 mbar – The current value is also corrected. **Factory setting:** 0.0

7.5 Flow measurement

7.5.1 Preparatory steps

- The Deltabar S PMD75 is usually used for flow measurement.
- Before calibrating the Deltabar S, the impulse piping must be cleaned and filled with fluid.
  → See the following table.

	Valves	Meaning
1	Situation: All valves closed	
2	Open 3	
3	Open A and B	
4	Clean impulse piping if necessary:[1)] – by blowing out with compressed air in the case of gases – by rinsing out in the case of liquids.	
	Open 1 and 5.[1]	Blow out/rinse out impulse piping.
	Close 1 and 5.[1]	Close valves after cleaning.
5	Open 2	Introduce fluid.
6	Open 6 and 7 briefly	Vent device.
7	Close 2; Open 4	
8	Open 6 and 7 briefly	Vent device again.
9	Carry out pos. zero adjustment if the following conditions are met. If the conditions are not met, then do not carry out the pos. zero adjustment until after step 11. → 60, Section 7.5.3 and → 56, Section 7.4. Conditions: – The process cannot be blocked off. – The tapping points (A and B) are at the same geodetic height.	
10	Close 3; Open 2	Set measuring point in operation.
11	Carry out pos. zero adjustment if the flow can be blocked off. In this case, step 9 is not applicable. → 60, Section 7.5.3 and → 56, Section 7.4	

Preferred installation

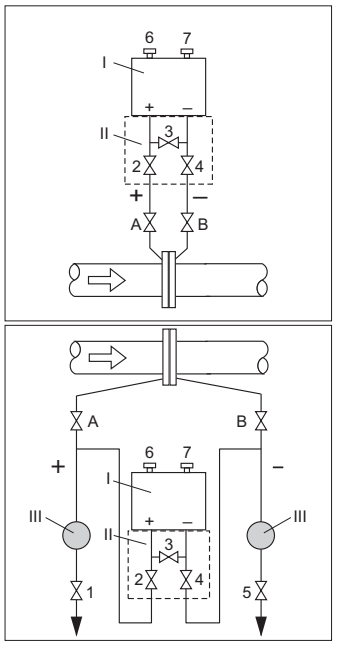

Fig. 35: Above: preferred installation for gases
Below: preferred installation for liquids

I Deltabar S PMD75
II Three-valve manifold
Separator
1, 5 Drain valves
2, 4 Inlet valves
3 Equalising valve
6, 7 Vent valves on Deltabar S
A, B Shut-off valves

1) for arrangement with 5 valves

7.5.2 Information on flow measurement

In the "Flow" measuring mode, the device determines a volume or mass flow value from the differential pressure measured. The differential pressure is generated by means of primary elements such as pitot tubes or orifice plates and depends on the volume or mass flow. Four flow measuring modes are available: volume flow, norm volume flow (European norm conditions), standard volume flow (American standard conditions) and mass flow.

In addition, the Deltabar S software is equipped with two totalizers as standard. The totalizers add up the volume or the mass flow. The counting function and the unit can be set separately for both totalizers. The first totalizer (totalizer 1) can be reset to zero at any time while the second (totalizer 2) totalises the flow from commissioning onwards and cannot be reset.

- There is a Quick Setup menu for each of the measuring modes Pressure, Level and Flow which guides you through the most important basic functions. With the setting in the MEASURING MODE parameter, you specify which Quick Setup menu should be displayed. → See also → 55, Section 7.3 "Selecting language and measuring mode".
- For a detailed description of the parameters see the Operating Instructions BA00274P "Cerabar S/Deltabar S/Deltapilot S, Description of device functions"
  - Table 6, POSITION ADJUSTMENT
  - Table 14, BASIC SETUP
  - Table 17, EXTENDED SETUP
  - Table 20, TOTALIZER SETUP.
- For flow measurement, select the "Flow" option by means of the MEASURING MODE parameter. The operating menu is structured appropriately.

⚠ WARNING

Changing the measuring mode can affect the adjustment data!

This situation can result in product overflow.

▶ Check calibration data when the measuring mode is changed.

7.5.3 Quick Setup menu for the Flow measuring mode

On-site operation		Digital communication
Measured value display On-site display: Switch from the measured value display to GROUP SELECTION with E.		See BA00274P.
GROUP SELECTION Select MEASURING MODE.		
MEASURING MODE Select "Flow" option.		
GROUP SELECTION Select QUICK SETUP menu.		
POS. ZERO ADJUST Due to orientation of the device, there may be a shift in the measured value. You correct the MEASURED VALUE via the POS. ZERO ADJUST parameter with the "Confirm" option, i. e. you assign the value 0.0 to the pressure present.		
MAX. FLOW Enter maximum flow of primary device. (→ See also layout sheet of primary device).		
MAX. PRESS FLOW Enter maximum pressure of primary device. (→ See also layout sheet of primary device).		
DAMPING TIME Enter damping time (time constant τ). The damping affects the speed at which all subsequent elements, such as the on-site display, measured value and current output react to a change in the pressure.		

For on-site operation, → 📄 41, Section 6.2.3 "Function of the operating elements – on-site display connected" and → 📄 46, Section 6.4 "On-site operation – on-site display connected".

7.6 Level measurement

7.6.1 Preparatory steps

Open container

- The Deltabar S PMD75 and FMD77 are suitable for level measurement in an open container.
- FMD77: the device is ready for calibration immediately after opening a shut-off valve (may or may not be present).
- PMD75: before calibrating the device, the impulse piping must be cleaned and filled with fluid. → See the following table.

	Valves	Meaning
1	Fill container to a level above the lower tap.	
2	Clean impulse piping if necessary:	
	Close A.	Block off device.
	Open B.	Rinse out impulse piping.
	Close B.	Close valves after cleaning.
3	Fill measuring system with fluid.	
	Open A.	Open shut-off valve.
4	Vent device.	
	Open 6 briefly, then close it again.	Fill device completely with fluid and remove air.
5	Set measuring point in operation.	
	Now – B and 6 are closed. – A is open.	
6	Carry out calibration. → 64, Section 7.6.2.	

Installation

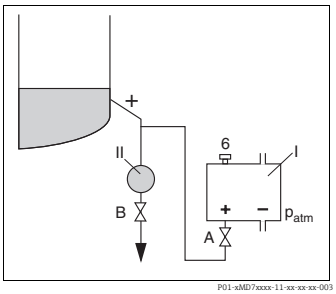

Fig. 36: Open container

I Deltabar S PMD75
II Separator
6 Vent valves on Deltabar S
A Shut-off valve
B Drain valve

Closed container

- All Deltabar S versions are suitable for level measurement in closed containers.
- FMD77: the device is ready for calibration immediately after opening the shut-off valves (may or may not be present). Before calibrating the device, the impulse piping must be cleaned and filled with fluid.
- FMD78: the device is ready for calibration immediately.
- PMD75: before calibrating the device, the impulse piping must be cleaned and filled with fluid. → See the following table.

	Valves	Meaning	Installation
1	Fill container to a level above the lower tap. Negative differential pressure line filled with gas.		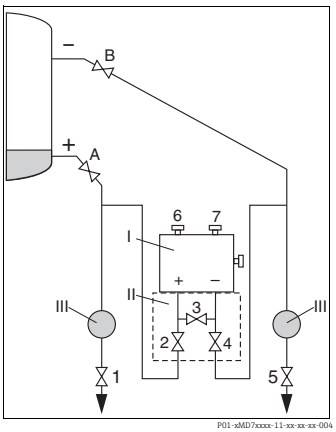
2	Fill measuring system with fluid.		
	Close 3.	Shut off positive side from negative side.	
	Open A and B.	Open shut-off valves.	
3	Vent positive side (empty negative side if necessary).		
	Open 2 and 4.	Introduce fluid on positive side.	
	Open 6 and 7 briefly, then close them again.	Fill positive side completely with fluid and remove air.	
4	Set measuring point in operation.		
	Now – 3, 6 and 7 are closed. – 2, 4, A and B are open.		
5	Carry out calibration. → 📄 64, Section 7.6.2.		*Fig. 37: Closed container* *I Deltabar S PMD75* *II Three-valve manifold* *III Separator* *1, 5 Drain valves* *2, 4 Inlet valves* *3 Equalising valve* *6, 7 Vent valve on Deltabar S* *A, B Shut-off valve*

Closed container with superimposed steam

- All Deltabar S versions are suitable for level measurement in containers with superimposed steam.
- FMD77: the device is ready for calibration immediately after opening the shut-off valves (may or may not be present). Before calibrating the device, the impulse piping must be cleaned and filled with fluid.
- FMD78: the device is ready for calibration immediately.
- PMD75: before calibrating the device, the impulse piping must be cleaned and filled with fluid. → See the following table.

	Valves	Meaning	Preferred installation
1	Situation: All valves closed		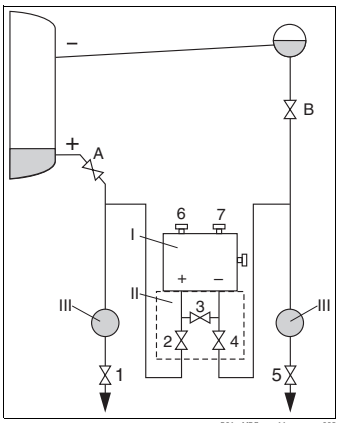 *Fig. 38: Closed container with superimposed steam* *I Deltabar S PMD75* *II Three-valve manifold* *III Separator* *1, 5 Drain valves* *2, 4 Inlet valves* *3 Equalising valve* *6, 7 Vent valves on Deltabar S* *A, B Shut-off valves*
2	Open A and B		
	Fill measuring system with fluid.		
3	Open 3		
4	Open 2	Introduce fluid.	
5	Open 6 and 7 briefly	Vent device.	
6	Close 2; Open 4		
7	Open 6 and 7 briefly	Vent device again.	
8	Set measuring point in operation.		
	Close 3.		
	Open 2.		
	If necessary, rinse out lines via 1 and 5.		

7.6.2 Information on level measurement

- The Flow, Level and Pressure operating modes each have a quick setup menu which guides you through the most important basic functions. → 66 for the "Level" quick setup menu.
- Furthermore, the three level modes "Level Easy Pressure", "Level Easy Height" and "Level Standard" are available to you for level measurement. You can select from the "Linear", "Pressure linearized" and "Height linearized" level types for the "Level Standard" level mode. The table in the "Overview of level measurement" section below provides an overview of the various measuring tasks.
  - In the "Level Easy Pressure" and "Level Easy Height" level modes, the values entered are not tested as extensively as in the "Level Standard" level mode. The values entered for EMPTY CALIB./FULL CALIB., EMPTY PRESSURE/FULL PRESSURE, EMPTY HEIGHT/ FULL HEIGHT and SET LRV/SET URV must have a minimum interval of 1% for the "Level Easy Pressure" and "Level Easy Height" level modes. The value will be rejected with a warning message if the values are too close together. Further limit values are not checked; i.e. the values entered must be appropriate for the sensor and the measuring task so that the measuring device can measure correctly.
  - The "Level Easy Pressure" and "Level Easy Height" level modes encompass fewer parameters than the "Level Standard" mode and are used for quick and easy configuration of a level application.
  - Customer-specific units of fill level, volume and mass or a linearization table may only be entered in the "Level Standard" level mode.
  - Where the device is intended for use as a subsystem in a safety function (SIL), a "Device configuration with enhanced parameter security" (SAFETY CONFIRM.) is only possible for the "Level" operating mode in the "Level Easy Pressure" level mode. All parameters previously entered are checked after a password is entered. Once the "Level Easy Height" or "Level Standard" has been selected, the configuration will first have to be reset to the ex-works setting using the RESET parameter (menu path: (GROUP SELECTION →) OPERATING MENU → OPERATION) using the reset code "7864". → For further information see the Deltabar S (SD00189P) Functional Safety Manual.
- See the Operating Instructions BA00274P "Cerabar S/Deltabar S/Deltapilot S, Description of device functions".

⚠ WARNING

Changing the measuring mode can affect the adjustment data!

This situation can result in product overflow.

▶ Check calibration data when the measuring mode is changed.

7.6.3 Overview of level measurement

Measuring task	LEVEL SELECTION/ LEVEL MODE	Measured variable options	Description	Comment	Measured value display
The measured variable is in direct proportion to the measured pressure. Calibration is performed by entering two pressure-level value pairs.	LEVEL SELECTION: Level Easy Pressure	Via OUTPUT UNIT parameter: %, level, volume or mass units.	– Calibration with reference pressure – wet calibration, see Operating Instructions BA00274P. – Calibration without reference pressure – dry calibration, see Operating Instructions BA00274P.	– Incorrect entries are possible – SIL mode possible – Customised units are not possible	The measured value display and the LEVEL BEFORE LIN parameter show the measured value.
The measured variable is in direct proportion to the measured pressure. Calibration is performed by entering the density and two height-level value pairs.	LEVEL SELECTION: Level Easy Height	Via OUTPUT UNIT parameter: %, level, volume or mass units.	– Calibration with reference pressure – wet calibration, see Operating Instructions BA00274P. – Calibration without reference pressure – dry calibration, see Operating Instructions BA00274P.	– Incorrect entries are possible – SIL mode not possible – Customised units are not possible	The measured value display and the LEVEL BEFORE LIN parameter show the measured value.
The measured variable is in direct proportion to the measured pressure.	LEVEL SELECTION: Level standard/ LEVEL MODE: Linear	Via LIN. MEASURAND parameter: – % (level) – Level – Volume – Mass	– Calibration with reference pressure – wet calibration, see Operating Instructions BA00274P. – Calibration without reference pressure – dry calibration, see Operating Instructions BA00274P.	– Incorrect entries are rejected by the device – SIL mode not possible – Customised level, volume and mass units are possible	The measured value display and the LEVEL BEFORE LIN parameter show the measured value.
The measured variable is not in direct proportion to the measured pressure as, for example, with containers with a conical outlet. A linearisation table must be entered for the calibration.	LEVEL SELECTION: Level standard/ LEVEL MODE: Pressure linearized	Via LINd. MEASURAND parameter: – Pressure + % – Pressure + volume – Pressure + mass	– Calibration with reference pressure: semiautomatic entry of linearisation table, see Operating Instructions BA00274P. – Calibration without reference pressure: manual entry of linearisation table, see Operating Instructions BA00274P.	– Incorrect entries are rejected by the device – SIL mode not possible – Customised level, volume and mass units are possible	The measured value display and the TANK CONTENT parameter show the measured value.
– Two measured variables are required or – The container shape is given by value pairs, such as height and volume. The 1st measured variable %-height or height must be in direct proportion to the measured pressure. The 2nd measured variable volume, mass or % need not to be in direct proportion to the measured pressure. A linearisation table must be entered for the 2nd measured variable. The 2nd measured variable is assigned to the 1st measured variable by means of this table.	LEVEL SELECTION: Level standard/ LEVEL MODE: Height linearized	Via COMB. MEASURAND parameter: – Height + volume – Height + mass – Height + % – %-Height + volume – %-Height + mass – %-Height + %	– Calibration with reference pressure: wet calibration and semiautomatic entry of linearisation table, see Operating Instructions BA00274P. – Calibration without reference pressure: dry calibration and manual entry of linearisation table, see Operating Instructions BA00274P.	– Incorrect entries are rejected by the device – SIL mode not possible – Customised level, volume and mass units are possible	The measured value display and the TANK CONTENT parameter show the 2nd measured value (volume, mass or %). The LEVEL BEFORE LIN parameter displays the 1st measured value (%-height or height).

7.6.4 Quick Setup menu for Level measuring mode

- Some parameters are only displayed if other parameters are appropriately configured. For example, the EMPTY CALIB. parameter is only displayed in the following cases:
  - LEVEL SELECTION "Level Easy Pressure" and CALIBRATION MODE "Wet"
  - LEVEL SELECTION "Level Standard", LEVEL MODE "Linear" and CALIBRATION MODE "WET"

  You can find the LEVEL MODE parameter in the BASIC SETTINGS function group (menu path: (GROUP SELECTION →) OPERATING MENU → SETTINGS → BASIC SETTINGS).
- The following parameters are set to the following values in the factory:
  - LEVEL SELETION: Level Easy Pressure
  - CALIBRATION MODE: Wet
  - OUTPUT UNIT or LIN. MEASURAND: %
  - EMPTY CALIB.: 0.0
  - FULL CALIB.: 100.0
  - SET LRV (BASIC SETTINGS group): 0.0 (corresponds to 4 mA value)
  - SET URV (BASIC SETTINGS group): 100.0 (corresponds to 20 mA value).
- The quick setup is suitable for simple and quick commissioning. If you wish to make more complex settings, e.g. change the unit from "%" to "m", you will have to calibrate using the BASIC SETTINGS group. → See Operating Instructions BA00274P.

⚠ WARNING

Changing the measuring mode can affect the adjustment data!

This situation can result in product overflow.

▶ Check calibration data when the measuring mode is changed.

On-site operation	Digital communication
Measured value display On-site display: Switch from the measured value display to GROUP SELECTION with E.	See BA00274P.
GROUP SELECTION Select MEASURING MODE.	
MEASURING MODE Select "Level" option.	
LEVEL SELECTION Select level mode. For an overview → 65.	
GROUP SELECTION Select QUICK SETUP menu.	
POS. ZERO ADJUST Due to orientation of the device, there may be a shift in the measured value. You correct the MEASURED VALUE via the POS. ZERO ADJUST parameter with the "Confirm" option, i. e. you assign the value 0.0 to the pressure present.	
EMPTY CALIB. [1] (produce appropriate level) Enter level for the lower calibration point. For this parameter, enter a level value which is assigned to the pressure present at the device.	
FULL CALIB. [1] (produce appropriate level) Enter level for the upper calibration point. For this parameter, enter a level value which is assigned to the pressure present at the device.	
DAMPING TIME Enter damping time (time constant τ). The damping affects the speed at which all subsequent elements, such as the on-site display, measured value and current output react to a change in the pressure.	

1) – LEVEL SELECTION "Level Easy Pressure" and CALIBRATION MODE "Wet"
– LEVEL SELECTION "Level Standard", LEVEL MODE "Linear" and CALIBRATION MODE "Wet"

For on-site operation, → 41, Section 6.2.3 "Function of the operating elements – on-site display connected" and → 46, Section 6.4 "On-site operation – on-site display connected".

7.7 Differential pressure measurement

7.7.1 Preparatory steps

- The Deltabar S PMD75 and FMD78 are usually used for differential pressure measurement.
- FMD78: the device is ready for calibration immediately.
- PMD75: before calibrating the device, the impulse piping must be cleaned and filled with fluid. → See the following table.

	Valves	Meaning	Preferred installation
1	Situation: All valves closed		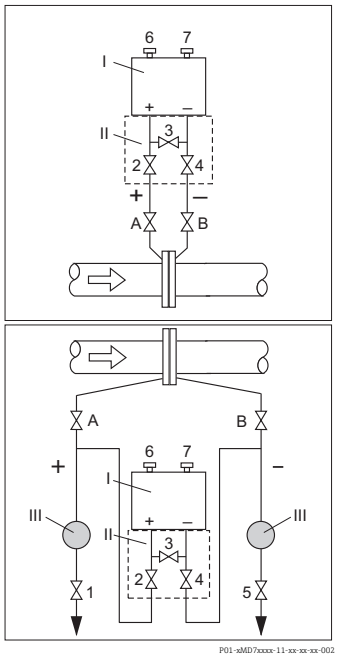 *Fig. 39: Above: preferred installation for gases Below: preferred installation for liquids* *I Deltabar S PMD75* *II Three-valve manifold* *III Separator* *1, 5 Drain valves* *2, 4 Inlet valves* *3 Equalising valve* *6, 7 Vent valves on Deltabar S* *A, B Shut-off valve*
2	Open 3		
3	Open A and B		
4	Clean impulse piping if necessary:[1)] – by blowing out with compressed air in the case of gases – by rinsing out in the case of liquids.		
	Open 1 and 5.[1]	Blow out/rinse out impulse piping.	
	Close 1 and 5.[1]	Close valves after cleaning.	
5	Open 2	Introduce fluid.	
6	Open 6 and 7 briefly	Vent device.	
7	Close 2; Open 4		
8	Open 6 and 7 briefly	Vent device again.	
9	Set measuring point in operation.		
	Close 3.		
	Open 2.		

1) for arrangement with 5 valves

7.7.2 Information on differential pressure measurement

- There is a Quick Setup menu for each of the measuring modes Pressure, Level and Flow which guides you through the most important basic functions. With the setting in the MEASURING MODE parameter, you specify which Quick Setup menu should be displayed. → 55, Section 7.3 "Selecting language and measuring mode".
- For a detailed description of the parameters see the Operating Instructions BA00274P "Cerabar S/Deltabar S/Deltapilot S, Description of device functions"
  - Table 6, POSITION ADJUSTMENT
  - Table 7, BASIC SETUP
  - Table 15, EXTENDED SETUP
- For differential pressure measurement, select the "Pressure" option by means of the MEASURING MODE parameter. The operating menu is structured appropriately.

WARNING

Changing the measuring mode can affect the adjustment data!

This situation can result in product overflow.

▶ Check calibration data when the measuring mode is changed.

7.7.3 Quick Setup menu for Pressure measuring mode

On-site operation	Digital communication
Measured value display On-site display: Switch from the measured value display to GROUP SELECTION with E.	See BA00274P.
GROUP SELECTION Select MEASURING MODE.	
MEASURING MODE Select "Pressure" option.	
GROUP SELECTION Select QUICK SETUP menu.	
POS. ZERO ADJUST Due to orientation of the device, there may be a shift in the measured value. You correct the MEASURED VALUE via the POS. ZERO ADJUST parameter with the "Confirm" option, i. e. you assign the value 0.0 to the pressure present.	
SET LRV Set the measuring range (enter 4 mA value). Specify a pressure value for the lower current value (4 mA value). A reference pressure does not have to be present at the device.	
SET URV Set the measuring range (enter 20 mA value). The pressure for the upper current value (20 mA value) is present at device. With the "Confirm" option, you assign the upper current value to the pressure value present.	
DAMPING TIME Enter damping time (time constant τ). The damping affects the speed at which all subsequent elements, such as the on-site display, measured value and current output react to a change in the pressure.	

For on-site operation, → 41, Section 6.2.3 "Function of the operating elements – on-site display connected" and → 46, Section 6.4 "On-site operation – on-site display connected".

8 Maintenance

Deltabar S requires no maintenance.

8.1 Cleaning instructions

Endress+Hauser offer flushing rings as accessories to clean process isolating diaphragms without taking the transmitters out of the process.
For further information please contact your local Endress+Hauser Sales Center.

8.1.1 Deltabar FMD77, FMD78

A frequent use of sterilization in place (SIP) will increase the stress on the process isolating diaphragm. Under unfavorable circumstances in the long term view we cannot exclude that a frequent temperature change could lead to a material fatigue of the process isolating diaphragm and possibly to a leakage.

8.2 Exterior cleaning

Please note the following points when cleaning the device:
- The cleaning agents used should not attack the surface and the seals.
- Mechanical damage to the process isolating diaphragm, e.g. due to pointed objects, must be avoided.
- Observe degree of protection. See therefor nameplate if necessary (→ 10).

9 Trouble-shooting

9.1 Messages

The following table lists all the possible messages that can occur.
The device differentiates between the error types "Alarm", "Warning" and "Error". You may specify whether the instrument should react as if for an "Alarm" or "Warning" for "Error" messages.
→ See "Error type/NA 64" column and Section 9.2 "Response of outputs to errors".

In addition, the "Error type/NA 64" column classifies the messages in accordance with NAMUR Recommendation NA 64:
- Break down: indicated with "B"
- Maintenance need: indicated with "C" (check request)
- Function check: indicated with "I" (in service)

Error message display on the on-site display:
- The measured value display shows the message with the highest priority. → See "Priority" column.
- The ALARM STATUS parameter shows all the messages present in descending order of priority. You can scroll through all the messages present with the ⊞ key or ⊟ key.

Message display via digial communication:
- The ALARM STATUS parameter shows the message with the highest priority. → See "Priority" column.

- If the device detects a defect in the on-site display during initialization, special error messages are generated. → For the error messages, → 78, Section 9.1.1 "On-site display error messages".
- For support and further information, please contact Endress+Hauser Service.
- → See also Section 9.4 ff.

Code	Error type/ NA 64	Corresponds NE 107	Message/description	Cause	Measure	Priority
101 (A101)	Alarm B	Failure (F)	B>Sensor electronic EEPROM error	– Electromagnetic effects are greater than specifications in the technical data. (→ See Section 10.) This message normally only appears briefly. – Sensor defect.	– Wait a few minutes. – Restart the device. Perform reset (Code 62). – Block off electromagnetic effects or eliminate source of disturbance. – Replace sensor.	17
102 (W102)	Warning C	Maintenance request (M)	C>Checksum error in EEPROM: peakhold segment	– Main electronics defect. Correct measurement can continue as long as you do not need the peak hold indicator function.	– Replace main electronics.	53
106 (W106)	Warning C	Funktion check (C)	C>Downloading - please wait	– Downloading.	– Wait for download to complete.	52
110 (A110)	Alarm B	Failure (F)	B>Checksum error in EEPROM: configuration segment	– The supply voltage is disconnected when writing. – Electromagnetic effects are greater than specifications in the technical data. (→ See Section 10.) – Main electronics defect.	– Reestablish supply voltage. Perform reset (Code 7864) if necessary. Carry out calibration again. – Block off electromagnetic effects or eliminate sources of disturbance. – Replace main electronics.	6

Code	Error type/ NA 64	Corresponds NE 107	Message/description	Cause	Measure	Priority
113 (A113)	Alarm B	Failure (F)	B>ROM failure in transmitter electronic	– Main electronics defect.	– Replace main electronics.	1
115 (E115)	Error B factory setting: Warning C	Out of specification (S)	B>Sensor overpressure	– Overpressure present. – Sensor defect.	– Reduce pressure until message disappears. – Replace sensor.	29
116 (W116)	Warning C	Maintenance request (M)	C>Download error, repeat download	– The file is defect. – During the download, the data are not correctly transmitted to the processor, e.g. because of open cable connections, spikes (ripple) on the supply voltage or electromagnetic effects.	– Use another file. – Check cable connection PC – transmitter. – Block off electromagnetic effects or eliminate sources of disturbance. – Perform reset (Code 7864) and carry out calibration again. – Repeat download.	36
120 (E120)	Error B factory setting: Warning C	Out of specification (S)	B>Sensor low pressure	– Pressure too low. – Sensor defect.	– Increase pressure until message disappears. – Replace sensor.	30
121 (A121)	Alarm B	Failure (F)	B>Checksum error in factory segment of EEPROM	– Main electronics defect.	– Replace main electronics.	5
122 (A122)	Alarm B	Failure (F)	B>Sensor not connected	– Cable connection sensor –main electronics disconnected. – Electromagnetic effects are greater than specifications in the technical data. (→ See Section 10.) – Main electronics defect. – Sensor defect.	– Check cable connection and repair if necessary. – Block off electromagnetic effects or eliminate source of disturbance. – Replace main electronics. – Replace sensor.	13
130 (A130)	Alarm B	Failure (F)	B>EEPROM is defect.	– Main electronics defect.	– Replace main electronics.	10
131 (A131)	Alarm B	Failure (F)	B>Checksum error in EEPROM: min/max segment	– Main electronics defect.	– Replace main electronics.	9
132 (A132)	Alarm B	Failure (F)	B>Checksum error in totalizer EEPROM	– Main electronics defect.	– Replace main electronics.	7
133 (A133)	Alarm B	Failure (F)	B>Checksum error in History EEPROM	– An error occurred when writing. – Main electronics defect.	– Perform reset (Code 7864) and carry out calibration again. – Replace electronics.	8
602 (W602)	Warning C	Funktion check (C)	C>Linearisation curve not monotone	– The linearisation table is not monotonic increasing or decreasing.	– Add to linearisation table or perform linearisation again.	57

Code	Error type/ NA 64	Corresponds NE 107	Message/description	Cause	Measure	Priority
604 (W604)	Warning C	Funktion check (C)	C>Linearisation table not valid. Less than 2 points or points too close	From software version "02.10.xx" onwards, there is no min. span for the Y-points.		58
				– The linearisation table consists of less than 2 points. – At least 2 points in the linearisation table are too close together. A minimum gap of 0.5 % of the distance between two points must be maintained. Spans for the "Pressure linearized" option: HYDR. PRESS MAX. – HYDR. PRESS MIN.; TANK CONTENT MAX. – TANK CONTENT MIN. Spans for the "Height linearized" option: LEVEL MAX – LEVEL MIN; TANK CONTENT MAX. – TANK CONTENT MIN.	– Add to linearisation table. If necessary, perform linearisation again. – Correct linearisation table and accept again.	
613 (W613)	Warning I	Funktion check (C)	I>Simulation is active	– Simulation is switched on, i.e. the device is not measuring at present.	– Switch off simulation.	60
620 (E620)	Error C Factory setting: Warning C	Out of specification (S)	C>Current output out of range	The current is outside the permitted range 3.8 to 20.5 mA. – The pressure applied is outside the set measuring range (but within the sensor range). – Loose connection at sensor cable	– Check pressure applied, reconfigure measuring range if necessary (→ See also Operating Instructions BA00274P) – Perform reset (Code 7864) and carry out calibration again. – Wait a short period of time and tighten the connection, or avoid loose connection.	49
700 (W700)	Warning C	Maintenance request (M)	C>Last configuration not stored	– An error occurred when writing or reading configuration data or the power supply was disconnected. – Main electronics defect.	– Perform reset (Code 7864) and carry out calibration again. – Replace main electronics.	54
701 (W701)	Warning C	Funktion check (C)	C>Measuring chain config. exceeds sensor range	– The calibration carried out would result in the sensor nominal operating range being undershot or overshot.	– Carry out calibration again.	50
702 (W702)	Warning C	Maintenance request (M)	C>HistoROM data not consistent.	– Data were not written correctly to the HistoROM, e.g. if the HistoROM was detached during the writing process. – HistoROM does not have any data.	– Repeat upload. – Perform reset (Code 7864) and carry out calibration again. – Copy suitable data to the HistoROM. (→ See also → 📄 50, Section 6.5.1 "Copying configuration data".)	55
703 (A703)	Alarm B	Failure (F)	B>Measurement error	– Fault in the main electronics. – Main electronics defect.	– Briefly disconnect device from the power supply. – Replace main electronics.	22
704 (A704)	Alarm B	Funktion check (C)	B>Measurement error	– Fault in the main electronics. – Main electronics defect.	– Briefly disconnect device from the power supply. – Replace main electronics.	12
705 (A705)	Alarm B	Failure (F)	B>Measurement error	– Fault in the main electronics. – Main electronics defect.	– Briefly disconnect device from the power supply. – Replace main electronics.	21

Code	Error type/ NA 64	Corresponds NE 107	Message/description	Cause	Measure	Priority
706 (W706)	Warning C	Maintenance request (M)	C>Configuration in HistoROM and device not identical	– Configuration (parameters) in the HistoROM and in the device is not identical.	– Copy data from the device to the HistoROM. (→ See also → 50, Section 6.5.1 "Copying configuration data".) – Copy data from the HistoROM to the device. (→ See also → 50, Section 6.5.1 "Copying configuration data".) The message remains if the HistoROM and the device have different software versions. The message goes out if you copy the data from the device to the HistoROM. – Device reset codes such as 7864 do not have any effect on the HistoROM. That means that if you do a reset, the configurations in the HistoROM and in the device may not be the same.	59
707 (A707)	Alarm B	Funktion check (C)	B>X-VAL. of lin. table out of edit limits.	– At least one X-VALUE in the linearisation table is either below the value for HYDR. PRESS MIN. or MIN. LEVEL or above the value for HYDR. PRESS. MAX. or LEVEL MAX.	– Carry out calibration again. (→ See also Operating Instructions BA00274P)	38
710 (W710)	Warning C	Funktion check (C)	B>Set span too small. Not allowed.	– Values for calibration (e.g. lower range value and upper range value) are too close together. – The sensor was replaced and the customer-specific configuration does not suit the sensor. – Unsuitable download carried out.	– Adjust calibration to suit sensor. (→ See also Operating Instructions BA00274P, parameter description MINIMUM SPAN) – Adjust calibration to suit sensor. – Replace sensor with a suitable sensor. – Check configuration and perform download again.	51
711 (A711)	Alarm B	Funktion check (C)	B>LRV or URV out of edit limits	– Lower range value and/or upper range value undershoot or overshoot the sensor range limits. – The sensor was replaced and the customer-specific configuration does not suit the sensor. – Unsuitable download carried out.	– Reconfigure lower range value and/or upper range value to suit the sensor. Pay attention to position factor. – Reconfigure lower range value and/or upper range value to suit the sensor. Pay attention to position factor. – Replace sensor with a suitable sensor. – Check configuration and perform download again.	37
713 (A713)	Alarm B	Funktion check (C)	B>100% POINT level out of edit limits	– The sensor was replaced.	– Carry out calibration again.	39

Code	Error type/ NA 64	Corresponds NE 107	Message/description	Cause	Measure	Priority
715 (E715)	Error C Factory setting: Warning C	Out of specification (S)	C>Sensor over temperature	– The temperature measured in the sensor is greater than the upper nominal temperature of the sensor. (→ See also Operating Instructions BA00274P, parameter description Tmax SENSOR) – Unsuitable download carried out.	– Reduce process temperature/ ambient temperature. – Check configuration and perform download again.	32
716 (E716)	Error B Factory setting: Alarm B	Failure (F)	B>process isolating diaphragm broken	– Sensor defect.	– Replace sensor. – Reduce pressure.	24
717 (E717)	Error C Factory setting: Warning	Out of specification (S)	C>Transmitter over temperature	– The temperature measured in the electronics is greater than the upper nominal temperature of the electronics (+88 °C (+190 °F)). – Unsuitable download carried out.	– Reduce ambient temperature. – Check configuration and perform download again.	34
718 (E718)	Error C Factory setting: Warning C	Out of specification (S)	C>Transmitter under temperature	– The temperature measured in the electronics is smaller than the lower nominal temperature of the electronics (−43 °C (-45 °F)). – Unsuitable download carried out.	– Increase ambient temperature. Insulate device if necessary. – Check configuration and perform download again.	35
719 (A719)	Alarm B	Funktion check (C)	B>Y-VAL of lin. table out of edit limits	– At least on Y-VALUE in the linearisation table is below the MIN. TANK CONTANT or above the MAX. TANK CONTENT.	– Carry out calibration again. (→ See also Operating Instructions BA00274P)	40
720 (E720)	Error C Factory setting: Warning C	Out of specification (S)	C>Sensor under temperature	– The temperature measured in the sensor is smaller than the lower nominal temperature of the sensor. (→ See also Operating Instructions BA00274P, parameter description Tmin SENSOR) – Unsuitable download carried out. – Loose connection at sensor cable	– Increase process temperature/ ambient temperature. – Check configuration and perform download again. – Wait a short period of time and tighten the connection, or avoid loose connection.	33
721 (A721)	Alarm B	Funktion check (C)	B>ZERO POSITION level out of edit limits	– LEVEL MIN or LEVEL MAX has been changed.	– Perform reset (Code 2710) and carry out calibration again.	41
722 (A722)	Alarm B	Funktion check (C)	B>EMPTY CALIB. or FULL CALIB. out of edit limits	– LEVEL MIN or LEVEL MAX has been changed.	– Perform reset (Code 2710) and carry out calibration again.	42
723 (A723)	Alarm B	Funktion check (C)	B>MAX. FLOW out of edit limits	– FLOW-MEAS. TYPE has been changed.	– Carry out calibration again.	43

Code	Error type/ NA 64	Corresponds NE 107	Message/description	Cause	Measure	Priority
725 (A725)	Alarm B	Failure (F)	B>Sensor connection error, cycle disturbance	– Electromagnetic effects are greater than specifications in the technical data. (→ See Section 10.) – Setscrew loose. – Sensor or main electronics defect.	– Block off electromagnetic effects or eliminate source of disturbance. – Retighten setscrew with 1 Nm (0,74 lbf ft) (see Chap. 4.3.10). – Replace sensor or main electronics.	25
726 (E726)	Error C Factory setting: Alarm C	Out of specification (S)	C>Sensor temperature error - overrange	– Electromagnetic effects are greater than specifications in the technical data. (→ See Section 10.) – Process temperature is outside permitted range. – Sensor defect.	– Block off electromagnetic effects or eliminate source of disturbance. – Check temperature present, reduce or increase if necessary. – If the process temperature is within the permitted range, replace sensor.	31
727 (E727)	Error C Factory setting: Warning C	Out of specification (S)	C>Sensor pressure error - overrange	– Electromagnetic effects are greater than specifications in the technical data. (→ See Section 10.) – Pressure is outside permitted range. – Sensor defect.	– Block off electromagnetic effects or eliminate source of disturbance. – Check pressure present, reduce or increase if necessary. – If the pressure is within the permitted range, replace sensor.	28
728 (A728)	Alarm B	Failure (F)	B>RAM error	– Fault in the main electronics. – Main electronics defect.	– Briefly disconnect device from the power supply. – Replace main electronics.	2
729 (A729)	Alarm B	Failure (F)	B>RAM error	– Fault in the main electronics. – Main electronics defect.	– Briefly disconnect device from the power supply. – Replace main electronics.	3
730 (E730)	Error C Factory setting: Warning C	Out of specification (S)	C>LRV user limits exceeded	– Pressure measured value has undershot the value specified for the Pmin ALARM WINDOW parameter. – Loose connection at sensor cable	– Check system/pressure measured value. – Change value for Pmin ALARM WINDOW if necessary. (→ See also Operating Instructions BA00274P, parameter description Pmin ALARM WINDOW) – Wait a short period of time and tighten the connection, or avoid loose connection.	46
731 (E731)	Error C Factory setting: Warning C	Out of specification (S)	C>URV user limits exceeded	– Pressure measured value has overshot the value specified for the Pmax ALARM WINDOW parameter.	– Check system/pressure measured value. – Change value for Pmax ALARM WINDOW if necessary. (→ See also Operating Instructions BA00274P, parameter description Pmax ALARM WINDOW)	45

Code	Error type/ NA 64	Corresponds NE 107	Message/description	Cause	Measure	Priority
732 (E732)	Error C Factory setting: Warning C	Out of specification (S)	C>LRV Temp. User limits exceeded	– Temperature measured value has undershot the value specified for the Tmin ALARM WINDOW parameter. – Loose connection at sensor cable	– Check system/temperature measured value. – Change value for Tmin ALARM WINDOW if necessary. (→ See also Operating Instructions BA00274P, parameter description Tmin ALARM WINDOW) – Wait a short period of time and tighten the connection, or avoid loose connection.	48
733 (E733)	Error C Factory setting: Warning C	Out of specification (S)	C>URV Temp. User limits exceeded	– Temperature measured value has overshot the value specified for the Tmax ALARM WINDOW parameter.	– Check system/temperature measured value. – Change value for Tmax ALARM WINDOW if necessary. (→ See also Operating Instructions BA00274P, parameter description Tmax ALARM WINDOW)	47
736 (A736)	Alarm B	Failure (F)	B>RAM error	– Fault in the main electronics. – Main electronics defect.	– Briefly disconnect device from the power supply. – Replace main electronics.	4
737 (A737)	Alarm B	Failure (F)	B>Measurement error	– Fault in the main electronics. – Main electronics defect.	– Briefly disconnect device from the power supply. – Replace main electronics.	20
738 (A738)	Alarm B	Failure (F)	B>Measurement error	– Fault in the main electronics. – Main electronics defect.	– Briefly disconnect device from the power supply. – Replace main electronics.	19
739 (A739)	Alarm B	Failure (F)	B>Measurement error	– Fault in the main electronics. – Main electronics defect.	– Briefly disconnect device from the power supply. – Replace main electronics.	23
740 (E740)	Error C Factory setting: Warning C	Maintenance request (M)	C>Calculation overflow, bad configuration, hardware defect	– Level measuring mode: the measured pressure has undershot the value for HYDR. PRESS. MIN. or overshot the value for HYDR. PRESS MAX. – Level measuring mode: The measured level did not reach the LEVEL MIN value or exceeded the LEVEL MAX value. – Flow measuring mode: the measured pressure has undershot the value for MAX. PRESS FLOW.	– Check configuration and carry out calibration again if necessary. – Select a device with a suitable measuring range. – Check configuration and carry out calibration again if necessary. (→ See also Operating Instructions BA00274P, parameter description LEVEL MIN.) – Check configuration and carry out calibration again if necessary. – Select a device with a suitable measuring range.	27
741 (A741)	Alarm B	Funktion check (C)	B>TANK HEIGHT out of edit limits	– LEVEL MIN or LEVEL MAX has been changed.	– Perform reset (Code 2710) and carry out calibration again.	44

Code	Error type/ NA 64	Corresponds NE 107	Message/description	Cause	Measure	Priority
742 (A742)	Alarm B	Failure (F)	B>Sensor connection error (upload)	– Electromagnetic effects are greater than specifications in the technical data. (→ See Section 10.) This message normally only appears briefly. – Cable connection sensor –main electronics disconnected. – Sensor defect.	– Wait a few minutes. – Perform reset (Code 7864) and carry out calibration again. – Check cable connection and repair if necessary. – Replace sensor.	18
743 (E743)	Alarm B	Failure (F)	B>Electronic PCB error during initialisation	– This message normally only appears briefly. – Main electronics defect.	– Wait a few minutes. – Restart the device. Perform reset (Code 62). – Replace main electronics.	14
744 (A744)	Alarm B	Failure (F)	B>Main electronic PCB error	– Electromagnetic effects are greater than specifications in the technical data. (→ See Section 10.) – Main electronics defect.	– Restart the device. Perform reset (Code 62). – Block off electromagnetic effects or eliminate source of disturbance. – Replace main electronics.	11
745 (W745)	Warning C	Maintenance request (M)	C>Sensor data unknown	– Sensor does not suit the device (electronic sensor nameplate). Device continues measuring.	– Replace sensor with a suitable sensor.	56
746 (W746)	Warning C	Funktion check (C)	C>Sensor connection error - initialising	– Electromagnetic effects are greater than specifications in the technical data. (→ See Section 10.) This message normally only appears briefly. – Overpressure or low pressure present.	– Wait a few minutes. – Restart the device. Perform reset (Code 7864). – Block off electromagnetic effects or eliminate source of disturbance. – Reduce or increase pressure.	26
747 (A747)	Alarm B	Failure (F)	B>Sensor software not compatible to electronics	– Sensor does not suit the device (electronic sensor nameplate).	– Replace sensor with a suitable sensor.	16
748 (A748)	Alarm B	Failure (F)	B>Memory failure in signal processor	– Electromagnetic effects are greater than specifications in the technical data. (→See Section 10.) – Main electronics defect.	– Block off electromagnetic effects or eliminate source of disturbance. – Replace main electronics.	15

9.1.1 On-site display error messages

If the device detects a defect in the on-site display during initialization, the following error messages can be displayed:

Message	Measure
Initialization, VU Electr. Defect A110	Exchange on-site display.
Initialization, VU Electr. Defect A114	
Initialization, VU Electr. Defect A281	
Initialization, VU Checksum Err. A110	
Initialization, VU Checksum Err. A112	
Initialization, VU Checksum Err. A171	

9.2 Response of outputs to errors

The device differentiates between the error types Alarm, Warning and Error.
→ See the following table and → 71, Section 9.1 "Messages".

Output	A (Alarm)	W (Warning)	E (Error: Alarm/Warning)
Current output	Assumes the value specified via the OUTPUT FAIL MODE[1)], ALT. CURR. OUTPUT[1] and SET MAX. ALARM[1] parameter. → See also the following section "Configuring current output for an alarm".	Device continues measuring.	For this error, you can enter whether the device should react as in the event of an alarm or as in the event of a warning. See corresponding "Alarm" or "Warning" column. (→ See also Operating Instructions BA00274P, parameter description SELECT ALARM TYPE)
Bargraph (on-site display)	The bargraph adopts the value defined by the OUTPUT FAIL MODE [1] parameter.	The bargraph adopts the value which corresponds to the current value.	→ See this table, "Alarm" or "Warning" column, depending on selection.
On-site display	– The measured value and message are displayed alternately – Measured value display: ϟ -symbol is permanently displayed. Message display – 3-digit number such as A122 and description	– The measured value and message are displayed alternately – Measured value display: ϟ -symbol flashes. Message display: – 3-digit number such as W613 and description	– The measured value and message are displayed alternately – Measured value display: see corresponding "Alarm" or "Warning" column Message display: – 3-digit number such as E731 and description
Remote operation (digital communication)	In the case of an alarm, the ALARM STATUS[2)] parameter displays a 3-digit number such as 122 for "Sensor not connected".	In the case of a warning, the ALARM STATUS[2] parameter displays a 3-digit number such as 613 for "Simulation is active".	In the case of an error, the ALARM STATUS[2] parameter displays a 3-digit number such as 731 for "URV user limits exceeded".

1) Menu path: (GROUP SELECTION →) OPERATING MENU → OUTPUT

2) Menu path: (GROUP SELECTION →) OPERATING MENU → MESSAGES

9.2.1 Configuring current output for an alarm

You can configure the current output for the event of an alarm by means of the OUTPUT FAIL MODE, ALT. CURR. OUTPUT and SET MAX. ALARM parameters. The parameters are displayed in the OUTPUT group (menu path: (GROUP SELECTION →) OPERATING MENU → OUTPUT).

In the event of an alarm, the current and the bargraph assume the value entered with the OUTPUT FAIL MODE parameter.

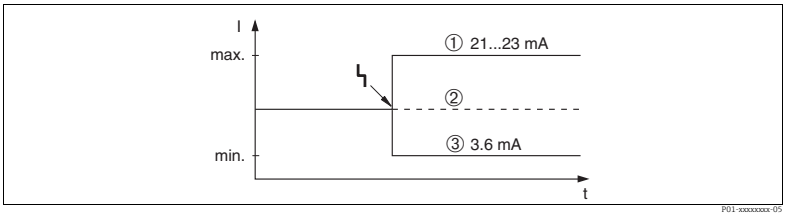

Fig. 40: Current output in the event of an alarm

Options:
1 Max. alarm (110%): can be set between 21...23 mA via the SET MAX. ALARM parameter
2 Hold meas. value: last measured value is kept
3 Min. alarm (−10%): 3.6 mA

Factory setting:
- OUTPUT FAIL MODE: Max. Alarm (110%)
- SET MAX. ALARM: 22 mA

Use the ALT. CURR. OUTPUT parameter to set the current output value for the error messages E 120 "Sensor low pressure" and E 115 "Sensor overpressure". You have the following options:
- Normal/NE43: the current output assumes the value set via the OUTPUT FAIL MODE and SET MAX. ALARM parameters.
- Special
  - Lower sensor limit undershot (E 120 "Sensor low pressure"): 3.6 mA
  - Upper sensor limit overshot (E 115 "Sensor overpressure") overshot: current output assumes the value set via the SET MAX ALARM parameter.

  Attention : when using the case "special", the behavior is limited to an over/underpressure in a range LRL -10% up to LRL -30% and URL +10% up to URL +30%.

Factory setting:
- ALT. CURR. OUTPUT: Normal/NE43

9.3 Confirming messages

Depending on the settings for the ALARM DISPL. TIME and ACK. ALARM MODE parameters, the following measures should be taken to clear a message:

Settings [1]	Measures
– ALARM DISPL. TIME = 0 s – ACK. ALARM MODE = off	– Rectify cause of the message (see also Section 9.1).
– ALARM DISPL. TIME > 0 s – ACK. ALARM MODE = off	– Rectify cause of the message (see also Section 9.1). – Wait for the alarm display time to elapse.
– ALARM DISPL. TIME = 0 s – ACK. ALARM MODE = on	– Rectify cause of the message (see also Section 9.1). – Confirm message using ACK. ALARM parameter.
– ALARM DISPL. TIME > 0 s – ACK. ALARM MODE = on	– Rectify cause of the message (see also Section 9.1). – Confirm message using ACK. ALARM parameter. – Wait for the alarm display time to elapse. If a message appears and the alarm display time elapses before the message has been acknowledged, the message will be cleared once it has been acknowledged.

1) Menu path for ALARM DISPL. TIME and ACK. ALARM MODE: (GROUP SELECTION →) OPERATING MENU → DIAGNOSTICS → MESSAGES

If the on-site display displays a message, you can suppress it with the Ⓔ-key.
If there are several messages, the on-site display shows the message which has the highest priority (see also Section 9.1). Once you have suppressed this message using the Ⓔ-key, the message with the next highest priority is displayed. You can use the Ⓔ-key to suppress each message, one after the other.
The ALARM STATUS parameter continues to display all the messages present.

9.4 Repair

The Endress+Hauser repairs concept provides for measuring devices to have a modular design and also the customer may carry out repairs (→ 81, Section 9.6 "Spare Parts").

- For certified devices, please consult Chapter "Repair of Ex-certified devices".
- For more information on service and spare parts contact the Endress+Hauser Service. (→ See www.endress.com/worldwide)

9.5 Repair of Ex-certified devices

⚠ WARNING

Limitation of electrical safety due to incorrect connection!
Risk of explosion!

When repairing Ex-certified devices, please note the following:
- Only specialist personnel or Endress+Hauser may undertake repairs of certified devices.
- Relevant standards, national hazardous area regulations and Safety Instructions and Certificates must be observed.
- Only genuine Endress+Hauser spare parts may be used.
- When ordering spare parts, please check the device designation on the nameplate. Identical parts may only be used as replacements.
- Electronic inserts or sensors already in use in a standard instrument may not be used as spare parts for a certified device.
- Carry out repairs according to the instructions. After repairs, the device must fulfil the requirements of the specified individual tests.
- A certified device may only be converted into another certified variant by Endress+Hauser.
- All repairs and modifications must be documented.

9.6 Spare Parts

- Some replaceable measuring device components are identified by means of a spare part nameplate. This contains information about the spare part.
- All the spare parts for the measuring device along with the order code are listed In the W@M Device Viewer (www.endress.com/deviceviewer) and can be ordered. If available, users can also download the associated Installation Instructions.

Measuring device serial number:
- Located on the device and spare part nameplate.
- Can be read out via the "DEVICE SERIAL No" parameter in the "TRANSMITTER DATA" submenu.

9.7 Return

The measuring device must be returned if repairs or a factory calibration are required, or if the wrong measuring device has been ordered or delivered. According to legal regulations, Endress+Hauser, as a ISO-certified company, is required to follow certain procedures when handling returned products that are in contact with process fluids.
To ensure swift, safe and professional device returns, please read the return procedures and conditions on the Endress+Hauser website at www.services.endress.com/return-material.

9.8 Disposal

When disposing, separate and recycle the device components based on the materials.

9.9 Software history

Date	Software version	Changes software	Documentation	
			Operating Instructions	Description of Instrument Functions
11.2003	01.00.zz	Original software. Compatible with: – ToF Tool Field Tool Package, version 1.04.00 or higher – Commuwin II version 2.08.-1, Update G or higher – HART Communicator DXR375 with Device Rev.: 10, DD Rev.: 1	BA270P/00/EN/10.03 52020515	–
06.2004	02.00.zz	– Number of parameters in the Quick Setup menus has been reduced. – On-site operation: LANGUAGE and MEASURING MODE parameters have been moved to the top level. – New SAFETY CONFIRM. group implemented for SIL. → See also SD00189P Safety Manual Deltabar S. – MEASURING MODE "Level", LEVEL MODE "Linear": AREA UNIT and TANK SECTION parameters have been replaced with the TANK VOLUME and TANK HEIGHT parameters. – Function of the UNIT FLOW parameter has been split across four parameters. – Function of the SIMULATED VALUE parameter has been split across six parameters. – SENSOR TRIM and CURRENT TRIM groups have been removed. – Sensor adapt reset, code 1209 and sensor calibration reset, code 2509 have been removed. – Quick Setup menus are available via ToF Tool. Compatible with: – ToF Tool Field Tool Package version 2.00.00 or higher – Commuwin II version 2.08.-1, Update > G – HART Communicator DXR375/475 with Device Rev.: 20, DD Rev.: 1	BA270P/00/EN/05.04 52022793	BA274P/00/EN/05.04 52021469
06.2005	02.01.zz	– Operating keys also integrated on the optional on-site display. – Chinese and Japanese are available as the menu language on request. Compatible with: – ToF Tool Field Tool Package version 3.00.00 or higher – FieldCare version 2.01.00, DTM Library version 2.06.00, DTM: Deltabar S/MD7x/V02.00 V 1.4.98.74* – HART Communicator DXR375/475 with Device Rev.: 20, DD Rev.: 1* * Menu languages Chinese and Japanese not selectable	BA270P/00/EN/06.05 71000109	BA274P/00/EN/05.04 52021469
			BA270P/00/EN/11.05 71009586	BA274P/00/EN/05.04 52021469

Date	Software version	Changes software	Documentation	
			Operating Instructions	Description of Instrument Functions
06.2006	02.10.zz	– New "Level Easy Pressure" and "Level Easy Height" level modes implemented. New LEVEL SELECTION parameter implemented. – OPERATION group with DOWNLOAD SELECT parameter extended. – SAFETY CONFIRM group extended for the "Level" operating mode in the "Level Easy Pressure" level selection. → See also SD00189P Safety Manual Deltabar S. – Factory setting for the "Error" messages redefined. – Chinese and Japanese included as menu languages by default. Compatible with: – ToF Tool Field Tool Package version 4.0 – FieldCare version 2.02.00 – HART Communicator DXR375/475 with Device Rev.: 21, DD Rev.: 1	BA270P/00/en/07.06 71027244	BA274P/00/en/07.06 71027249
			BA270P/00/en/08.06 71027244	BA274P/00/en/07.06 71027249
			BA270P/00/en/10.07 71043294	BA274P/00/en/07.07 71061021
			BA270P/00/en/12.07 71043294	BA274P/00/en/07.07 71061021
			BA270P/00/en/05.08 71071730	BA274P/00/en/05.08 71071855
			BA270P/00/en/08.08 71077506	BA274P/00/en/05.08 71071855
			BA270P/00/EN/06.09 71095415	BA274P/00/EN/06.09 71095452
			BA270P/00/EN/05.10 71114104	BA274P/00/EN/05.10 71118244
			BA00270P/00/EN/13.11 71139762	BA00274P/00/EN/13.11 71139795
			BA00270P/00/EN/14.12 71161876	BA00274P/00/EN/13.11 71139795
01.2013	02.11.zz	"Russian" is included as a menu language by default. The menu language "Nederlands" is no longer supported.	BA00270P/00/EN/15.13 71204581	BA00274P/00/EN/14.13 71204628
			BA00270P/00/EN/16.14 71254456	BA00274P/00/EN/15.14 71254474
06.2014	02.20.zz	HART7 protocole revision has been implemented.	BA00270P/00/EN/17.14 71260313	BA00274P/00/EN/16.14 71260321
			BA00270P/00/EN/18.14 71270382	BA00274P/00/EN/17.14 71270402
			BA00270P/00/EN/19.15 71281252	BA00274P/00/EN/17.14 71270402
10.2017	02.30.zz	Improvement of safety confirmation and menues in FieldCare and HART handheld terminal.	BA00270P/00/EN/20.16 71336227	BA00274P/00/EN/18.16 71336359

10 Technical data

For technical data, please refer to the Technical Information TI00382P for Deltabar S.

Index

Numerics
4...20 mA test signal . . . 34

A
Alarm messages . . . 71

C
Cable specification . . . 34
Commubox FXA195 anschließen . . . 35
Connecting Commubox FXA291 . . . 36
Connecting ToF Adapter FXA291 . . . 36

D
Designated use . . . 8
Diaphragm seals, installation instructions . . . 22
Diaphragm seals, vacuum application . . . 23
Differential pressure measurement . . . 68
Differential pressure measurement, information . . . 69
Differential pressure measurement, installation . . . 20
Differential pressure measurement, preparatory steps 68
Differential pressure measurement, Quick Setup menu 69
Display . . . 37

E
Electrical connection . . . 32
Error messages . . . 71

F
Factory setting . . . 53
FieldCare . . . 52
Flow measurement . . . 59
Flow measurement, installation . . . 14
Flow measurement, Ouick Setup menu . . . 60
Flow measurement, preparatory steps . . . 58

H
Hazardous area . . . 9
HistoROM/M-Dat . . . 49

I
Incoming acceptance . . . 13

L
Language, selection . . . 55
Level measurement . . . 64–65
Level measurement, installation . . . 16
Level measurement, preparatory steps . . . 61
Level measurement, Quick Setup menu . . . 66
Load . . . 35
Locking operation . . . 52

M
Measuring layout for flow measurement . . . 14
Measuring layout for level measurement . . . 16
Measuring layout for pressure measurement . . . 20
Measuring mode, selection . . . 55

N
Nameplate . . . 10

O
On-site display . . . 37
Operating elements, function . . . 40–41
Operating elements, position . . . 39
Operating keys, on-site, Flow measuring mode (not for 160 bar and 250 bar) . . . 45
Operating keys, on-site, function . . . 40–41
Operating keys, on-site, Level measuring mode . . . 43
Operating keys, on-site, Pressure measuring mode . . . 42
Operating keys, position . . . 39
Operating menu . . . 46
Operational safety . . . 8
Overvoltage protection . . . 36

P
Pipe mounting . . . 27
Position adjustment . . . 56
Potential matching . . . 35–36
Pressure measurement, installation . . . 19
Pressure measurement, Quick Setup menu . . . 69
Product safety . . . 9

Q
Quick Setup menu flow . . . 60
Quick Setup menu level . . . 66
Quick Setup menu pressure . . . 69

R
Repair . . . 81
Repair of Ex-certified devices . . . 81
Reset . . . 53
Returning devices . . . 81
Rotating the housing . . . 30

S
Scope of delivery . . . 12
Screening . . . 35
Separate housing, assemble and mount . . . 29
Service Interface FXA291 . . . 36
Sicherheitshinweise . . . 8
SIL3 . . . 9
Software history . . . 82
Spare Parts . . . 81
Storage . . . 13
Supply voltage . . . 34

T
Trouble-shooting . . . 71

U
Unlocking operation . . . 52

W
Wand mounting . . . 27

Warnings 71
Workplace safety 8

www.addresses.endress.com

Endress+Hauser
People for Process Automation

TI00382P/00/EN/28.17
71374973

Technical Information
Deltabar S
PMD75, FMD77, FMD78

Differential pressure measurement and pressure measurement

Differential pressure transmitter with metal sensors

Applications

The device is used for the following measuring tasks:
- Flow measurement (volume flow or mass flow) in conjunction with differential pressure sensors in gases, vapors and liquids
- Level, volume or mass measurements in liquids
- High process temperatures up to 400 °C (752 °F) possible with diaphragm seal mount
- Differential pressure monitoring, e.g. of filters and pumps

Your benefits

- Very good reproducibility and long-term stability
- High reference accuracy up to 0.035 %
- Turn down up to 100:1, higher on request
- Used for flow and differential pressure monitoring up to SIL3, certified to IEC 61508 by TÜV SÜD
- High level of safety during operation thanks to function monitoring from the measuring cell to the electronics
- The patented TempC membrane for the diaphragm seal reduces measured errors caused by environmental and process temperature influences to a minimum
- Easy electronic replacement guaranteed with HistoROM®/M-DAT
- Uniform platform for differential pressure, hydrostatics and pressure (Deltabar S – Deltapilot S – Cerabar S)
- Practical user navigation for quick and easy commissioning
- Extensive diagnostic functions
- Cost-effective installation with Deltabar S FMD77, capillary on low-pressure side

Endress+Hauser
People for Process Automation

Table of contents

Document information 4
Document function 4
Symbols used 4
Documentation 5
Terms and abbreviations 6
Turn down calculation 7
Registered trademarks 7

Function and system design 8
Device selection 8
Measuring principle 10
Product design 10
Communication protocol 11

Input 12
Measured variable 12
Measuring range 12

Output 14
Output Signal 14
Signal range 14
Signal on alarm 14
Load 14
Dead time, time constant 15
Dynamic behavior, current output 16
Dynamic behavior Digital output (HART electronics) 16
Dynamic behavior PROFIBUS PA 17
Dynamic behavior FOUNDATION Fieldbus 17
Damping 18
Alarm current 18
Firmware version 18
HART protocol-specific data 18
PROFIBUS PA protocol-specific data 19
FOUNDATION Fieldbus protocol-specific data 19

Power supply 23
Terminal assignment 23
Supply voltage 24
Current consumption 24
Electrical connection 24
Terminals 24
Cable entries 25
Device plug 25
Cable specification 26
Start-up current 26
Residual ripple 26
Overvoltage protection (optionally for HART, PROFIBUS PA and FOUNDATION Fieldbus) 26
Influence of power supply 26

Performance characteristics of differential pressure / pressure transmitter (sensor module + electronics module) 27
Preamble 27
Total performance of transmitter 27
Reference accuracy [E1] 27
Total performance – Specification values 28
Long-term stability 29
Detailed Performance Explanation and Calculation 30
Total error 32

Performance characteristics - calculation example and additional information 33
Calculating the total performance in 5 steps 33
Installation factors 36
Reference operating conditions 37

Installation 38
General installation instructions 38
Measuring arrangement 38
Measuring arrangement for devices with diaphragm seals – FMD77 and FMD78 38
Orientation 38
Wall and pipe mounting, transmitter (optional) 39
Wall and pipe mounting, valve manifold (optional) 39
"Separate housing" version 40
Turning the housing 41
Oxygen applications 42
Ultrapure gas applications 42
Applications with hydrogen 42

Environment 43
Ambient temperature range 43
Storage temperature range 43
Degree of protection 43
Climate class 43
Electromagnetic compatibility 43
Vibration resistance 44

Process 45
Process temperature limits (temperature at transmitter) . . 45
Process temperature limits of capillary armoring: FMD77 and FMD78 46
Process temperature range, seals 46
Pressure specifications 47

Mechanical construction 48
Device height 48
T14 housing, optional display on the side 49
T15 housing, optional display on the top 50
T17 housing (hygienic), optional display on the side 50
Process connections PMD75 51
Process connections PMD75 52
Process connections PMD75 53
Valve manifold DA63M- (optional) 54
FMD77: Selecting the process connection and capillary line 55
FMD77 - Overview 56
Process connections FMD77 with diaphragm seal, high-pressure side 57
Process connections FMD77 with diaphragm seal, high-pressure side 58
Process connections FMD77 with diaphragm seal 59
Process connections FMD77 with diaphragm seal 61

Process connections FMD77 with diaphragm seal 63
Process connections FMD77 with diaphragm seal, low-pressure side 63
FMD78: Selecting the process connection and capillary line 64
FMD78 basic device 65
Process connections FMD78 with diaphragm seal 66
Process connections FMD78 with diaphragm seal 67
Process connections FMD78 with diaphragm seal 69
Process connections FMD78 with diaphragm seal 71
Process connections FMD78 with diaphragm seal 72
Process connections FMD78 with diaphragm seal 74
Process connections FMD78 with diaphragm seal 75
Process connections FMD78 with diaphragm seal 76
Separate housing: Wall and pipe mounting with mounting bracket 78
Materials not in contact with process 79
Weight 83
Materials in contact with process 83
Fill fluid 85

Operability 88
Operating concept 88
Local operation 88
Remote operation 91
HistoROM®/M-DAT (optional) 92
System integration 93

Planning instructions, diaphragm seal systems . . . 94
Applications 94
Design and operation mode 95
Differential pressure transmitter 96
Diaphragm seal filling oils 97
Operating temperature range 97
Response time 98
Information on cleaning 98
Installation instructions 98
Vacuum applications 102

Certificates and approvals 103
CE mark 103
RCM-Tick marking 103
Ex approvals 103
EAC conformity 103
Suitable for hygiene applications 103
Functional safety SIL/ IEC 61508 Declaration of Conformity (optional) 104
Overfill protection 104
CRN approval 104
Other standards and guidelines 104
Pressure Equipment Directive 2014/68/EU (PED) 104
Manufacturer declarations 105
Marine approval 106
Classification of process sealing between electrical systems and (flammable or combustible) process fluids in accordance with ANSI/ISA 12.27.01 106
Inspection certificate 106
Calibration 107
Service 107

Ordering information 108
Scope of delivery 108
Measuring point (TAG) 108
Configuration data sheet 109

Accessories 112
HistoROM®/M-DAT 112
Welding flanges and welding neck 112
Manifolds 112
Additional mechanical accessories 112

Supplementary documentation 113
Field of Activities 113
Technical Information 113
Special Documentation 113
Operating Instructions 113
Brief Operating Instructions 113
Functional safety manual (SIL) 113
Overfill protection 113
Safety Instructions (XA) 113
Installation/Control Drawings 114

Document information

Document function

The document contains all the technical data on the device and provides an overview of the accessories and other products that can be ordered for the device.

Symbols used

Safety symbols

Symbol	Meaning
DANGER	**DANGER!** This symbol alerts you to a dangerous situation. Failure to avoid this situation will result in serious or fatal injury.
WARNING	**WARNING!** This symbol alerts you to a dangerous situation. Failure to avoid this situation can result in serious or fatal injury.
CAUTION	**CAUTION!** This symbol alerts you to a dangerous situation. Failure to avoid this situation can result in minor or medium injury.
NOTICE	**NOTE!** This symbol contains information on procedures and other facts which do not result in personal injury.

Electrical symbols

Symbol	Meaning	Symbol	Meaning
⏚	**Protective ground connection** A terminal which must be connected to ground prior to establishing any other connections.	⏚	**Ground connection** A grounded terminal which, as far as the operator is concerned, is grounded via a grounding system.

Symbols for certain types of information

Symbol	Meaning
✓	**Permitted** Procedures, processes or actions that are permitted.
✓✓	**Preferred** Procedures, processes or actions that are preferred.
✗	**Forbidden** Procedures, processes or actions that are forbidden.
i	**Tip** Indicates additional information.
	Reference to documentation
	Reference to page
	Reference to graphic
	Visual inspection

Symbols in graphics

Symbol	Meaning
1, 2, 3 ...	Item numbers
1., 2., 3., ...	Series of steps
A, B, C, ...	Views
A-A, B-B, C-C, ...	Sections

Documentation

See chapter "Additional documentation" → 🗎 113

The document types listed are available:
In the Download Area of the Endress+Hauser Internet site: www.endress.com → Download

Safety Instructions (XA)

See the "Safety instructions" section → 🗎 113

Terms and abbreviations

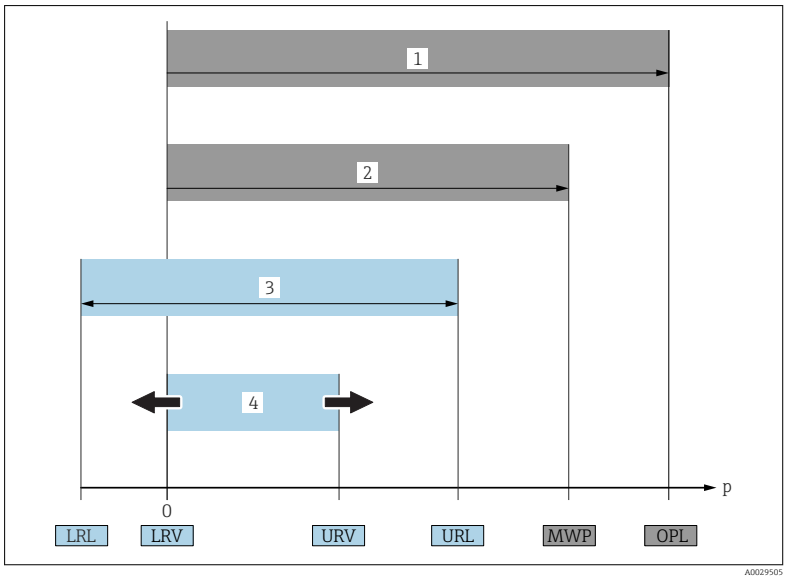

Item	Term/abbreviation	Explanation
1	OPL	The OPL (over pressure limit = sensor overload limit) for the measuring device depends on the lowest-rated element, with regard to pressure, of the selected components, i.e. the process connection has to be taken into consideration in addition to the measuring cell. Also observe pressure-temperature dependency. For the relevant standards and additional information, see the "Pressure specifications"→ 🗎 47 section. The OPL may only be applied for a limited period of time.
2	MWP	The MWP (maximum working pressure) for the sensors depends on the lowest-rated element, with regard to pressure, of the selected components, i.e. the process connection has to be taken into consideration in addition to the measuring cell. Also observe pressure-temperature dependency. For the relevant standards and additional information, see the "Pressure specifications"→ 🗎 47 section. The MWP may be applied at the device for an unlimited period. The MWP can also be found on the nameplate.
3	Maximum sensor measuring range	Span between LRL and URL This sensor measuring range is equivalent to the maximum calibratable/adjustable span.
4	Calibrated/adjusted span	Span between LRV and URV Factory setting: 0 to URL Other calibrated spans can be ordered as customized spans.
p	-	Pressure
-	LRL	Lower range limit
-	URL	Upper range limit
-	LRV	Lower range value
-	URV	Upper range value
-	TD (turn down)	Turn down Example - see the following section.

Turn down calculation

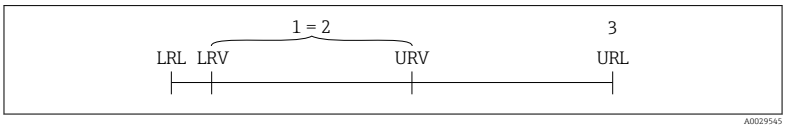

1 Calibrated/adjusted span
2 Zero point-based span
3 URL sensor

Example

- Sensor:10 bar (150 psi)
- Upper range value (URL) = 10 bar (150 psi)

Turn down (TD):

$$TD = \frac{URL}{|URV - LRV|}$$

$$TD = \frac{10\ bar\ (150\ psi)}{|5\ bar\ (75\ psi) - 0\ bar\ (0\ psi)|} = 2$$

In this example, the TD is 2:1.
This span is based on the zero point.

- Calibrated/adjusted span: 0 to 5 bar (0 to 75 psi)
- Lower range value (LRV) = 0 bar (0 psi)
- Upper range value (URV) = 5 bar (75 psi)

Registered trademarks

HART®

Registered trademark of the FieldComm Group, Austin, USA

PROFIBUS®

Registered trademark of the PROFIBUS User Organization, Karlsruhe, Germany

FOUNDATION™Fieldbus

Registered trademark of the FieldComm Group, Austin, Texas, USA

Function and system design

Device selection

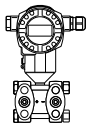

PMD75

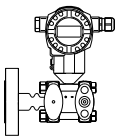

FMD77 with mounted diaphragm seal

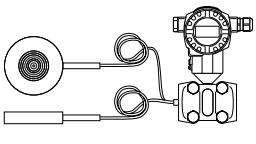

FMD78 with capillary diaphragm seals

Field of application

PMD75:
- Flow
- Level
- Differential pressure
- Pressure

FMD77:
- Level
- Differential pressure

FMD78:
- Level
- Differential pressure

Process connections

PMD75:
- 1/4 – 18 NPT
- RC 1/4

FMD77 low-pressure side (–):
- 1/4 – 18 NPT
- RC 1/4
- Alternatively available with capillary and diaphragm seal

FMD77 high-pressure side (+):
- DN 50 – DN 100
- ASME NPS 2" – 4"
- JIS 80A – 100A

FMD78:
Wide range of diaphragm seals

Measuring ranges

- PMD75: from −10 to +10 mbar (-0.15 to +0.15 psi) to −40 to +40 bar (-600 to +600 psi)
  As gauge or absolute pressure sensor: up to 250 bar (3750 psi)
- FMD77: from −100 to +100 mbar (-1.5 to +1.5 psi) to −16 bar to +16 bar (-240 to +240 psi)
- FMD78: from −100 to +100 mbar (-1.5 to +1.5 psi) to −40 to +40 bar (-600 to +600 psi)

OPL

PMD75:
on one side: up to 420 bar (6 300 psi)
on both sides: up to 630 bar (9 450 psi)
As gauge or absolute pressure sensor: up to 375 bar (5625 psi)

FMD77:
on one side: up to 160 bar (2 400 psi)
on both sides: up to 240 bar (3 600 psi)

FMD78:
on one side: up to 160 bar (2 400 psi)
on both sides: up to 240 bar (3 600 psi)

Process temperature range(temperature at process connection)

PMD75:
−40 to +85 °C (−40 to +185 °F)

FMD77:
−70 to +400 °C (−94 to +752 °F)
(depending on the filling oil)

FMD78:
−70 to +400 °C (−94 to +752 °F)
(depending on the filling oil)

Ambient temperature range

- Without LCD display: −50 to +85 °C (−58 to +185 °F)
- With LCD display: −20 to +70 °C (−4 to +158 °F)
  (extended temperature application range−50 to +85 °C (−58 to +185 °F) with limitations in optical properties, such as display speed and contrast)
- Separate housing −20 to +60 °C (−4 to +140 °F):
- Diaphragm seal systems depending on the version

Reference accuracy

- PMD75: up to ±0.035 % of the set span
- FMD77: up to ±0.075 % of the set span
- FMD78: up to ±0.075 % of the set span

Supply voltage

Supply voltage non-Ex
- 4 to 20 mA HART: 10.5 to 45 V DC
- PROFIBUS PA and FOUNDATION Fieldbus: 9 to 32 V DC

Supply voltage Ex ia
10.5 to 30 V DC

Output

4 to 20 mA with superimposed HART protocol, PROFIBUS PA or FOUNDATION Fieldbus

Options

- HistoROM®/M-DAT memory chip
- PMD75: with blind flange on LP side for gauge and absolute pressure measurement

Specialties

PMD75:
- p_{stat} up to 420 bar (6 300 psi)
- Process isolating diaphragm: tantalum

FMD77:
For extreme medium temperatures

FMD78:
Wide range of diaphragm seals

Measuring principle

Metal process isolating diaphragm

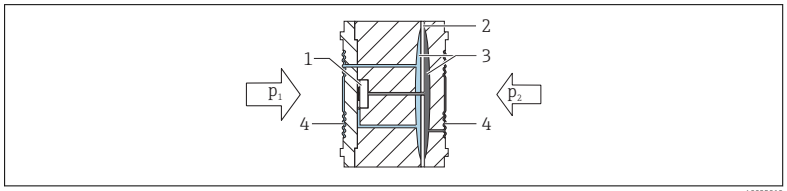

1 Measuring element
2 Middle diaphragm
3 Filling oil
4 Process isolating diaphragm

The process isolating diaphragms are deflected on both sides by the acting pressures. A filling oil transfers the pressure to a resistance bridge (semiconductor technology). The change in the bridge output voltage, which depends on the differential pressure, is measured and processed

Advantages:
- Standard system pressures: 160 bar (2 400 psi) up to 420 bar (6 300 psi)
- High long-term stability
- Very high single-sided overload resistance

Product design

Level measurement (level, volume and mass):

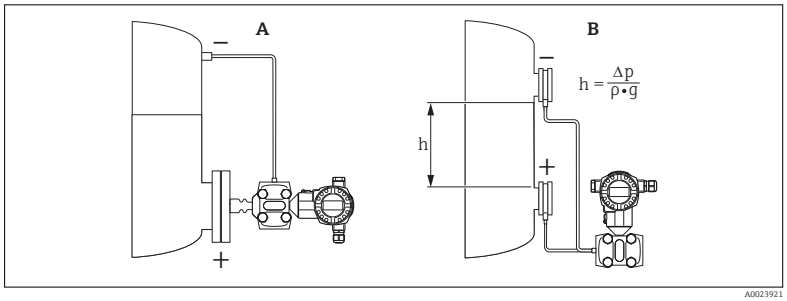

A Level measurement with FMD77
B Level measurement with FMD78
h Height (level)
Δp Differential pressure
ρ Density of the medium
g Gravitational constant

Your benefits

- Selection of the level operating mode which is optimum for your application in the device software
- Volume and mass measurements in any container shapes by means of a freely programmable characteristic curve
- Choice of diverse level units with automatic unit conversion
- A customized unit can be specified.
- Has a wide range of uses, e.g.
  - for level measurement in vessels with pressure overlay
  - in the event of foam formation
  - in containers with agitators or screen fittings
  - in the event of liquid gases
  - for standard level measurement

Flow measurement

Flow measurement with Deltabar S and primary device:

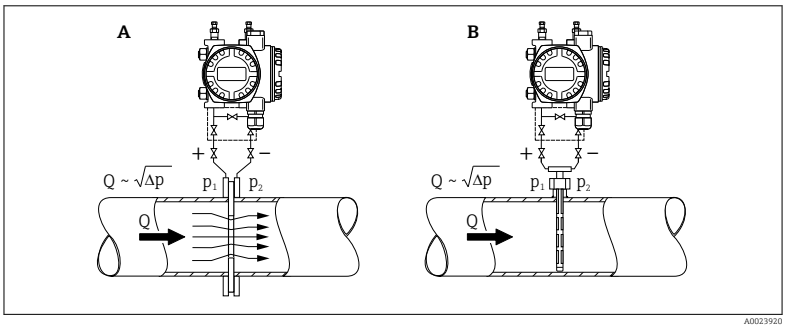

A *Orifice plate*
B *Pitot tube*
Q *Flow*
Δp *Differential pressure,* $\Delta p = p_1 - p_2$

Your benefits

- Choice of four flow modes of operation: volume flow, corrected volume flow (European norm conditions), standard volume flow (American standard conditions) and mass flow
- Choice of diverse flow units with automatic unit conversion
- A customized unit can be specified.
- Low flow cut off: when activated, this function suppresses small flows which can lead to large fluctuations in the measured value.
- Contains two totalizers as standard. One totalizer can be reset to zero.
- The totalizing mode and unit can be individually set for each totalizer. This allows independent daily and annual quantity totalizing.

Communication protocol

- 4 to 20 mA with HART communication protocol
- PROFIBUS PA
  - The Endress+Hauser devices meet the requirements of the FISCO model.
  - Due to a low current consumption of 13 mA ± 1 mA, the following number of devices can be operated on one bus segment if installing as per FISCO: up to 7 devices for Ex ia, CSA IS and FM IS applications or up to 27 devices for all other applications e.g. in non-hazardous areas, Ex nA etc. Further information on PROFIBUS PA can be found in Operating Instructions BA00034S "PROFIBUS DP/PA: Guidelines for planning and commissioning" and in the PNO Guideline.
- FOUNDATION Fieldbus
  - The Endress+Hauser devices meet the requirements of the FISCO model.
  - Due to a low current consumption of 15.5 mA ± 1 mA, the following number of devices can be operated on one bus segment if installing as per FISCO: up to 6 devices for Ex ia, CSA IS and FM IS applications or up to 24 devices for all other applications e.g. in non-hazardous areas, Ex nA etc. Further information on FOUNDATION Fieldbus, such as requirements for bus system components, can be found in Operating Instructions BA00013S "FOUNDATION Fieldbus Overview".

Input

Measured variable

Measured process variables

Differential pressure, pressure

Calculated process variables

- Flow rate (volume flow or mass flow)
- Absolute pressure, gauge pressure
- Level (level, volume or mass)

Measuring range

Sensor	Maximum sensor measuring range		Smallest calibratable span [1]	MWP	OPL		remains stable for a minimum of operating pressure [2]	Option [3]
	lower (LRL)	upper (URL)			on one side	on both sides		PN 160
[mbar (psi)]	[mbar (psi)]	[mbar (psi)]	[mbar (psi)]	[bar (psi)]	[bar (psi)]	[bar (psi)]	[$mbar_{abs}$ (psi_{abs})]	
FMD77, FMD78, PMD75: Option PN 160 / 16 MPa / 2400 psi								
10 (0.15) (PMD75 only)	−10 (-0.15)	+10 (+0.15)	0.25 (0.00375)	160 (2400)	160 (2400)	240 (3600)	0.1 (0.0015)	7B
30 (0.45) (PMD75 only)	−30 (-0.45)	+30 (+0.45)	0.3 (0.0045)					7C
100 (1.5)	−100 (-1.5)	+100 (+1.5)	1/5 (0.015/0.075) [4]	160 (2400) [5]				7D
500 (7.5)	−500 (-7.5)	+500 (+7.5)	5 (0.075)					7F
3000 (45)	−3000 (-45)	+3000 (+45)	30 (0.45)					7H
16000 (240)	−16000 (-240)	+16000 (+240)	160 (2.4)					7L
40000 (600)	−40000 (-600)	+40000 (+600)	400 (6)		"+" side [6]: 160 (2400)			7M
PMD75: Option PN 420 / 42 MPa / 6300 psi								
100 (1.5)	−100 (-1.5)	+100 (+1.5)	1/5 (0.015/0.075) [4]	420 (6300) [5]	420 (6300)	630 (9450)	0.1 (0.0015)	8D
500 (7.5)	−500 (-7.5)	+500 (+7.5)	5 (0.075)					8F
3000 (45)	−3000 (-45)	+3000 (+45)	30 (0.45)					8H
16000 (240)	−16000 (-240)	+16000 (+240)	160 (2.4)					8L
40000 (600)	−40000 (-600)	+40000 (+600)	400 (6)		"+" side [6]: 420 (6300)			8M

1) Turn down > 100:1 on request
2) The minimum operating pressure indicated in the table applies to silicone oil under reference operating conditions. Min. operating pressure at 85 °C (185 °F) for silicone oil: up to 10 $mbar_{abs}$ (0.15 psi_{abs}). FMD77 and FMD78: Min. operating pressure: 50 $mbar_{abs}$ (0.75 psi_{abs}); observe also the pressure and temperature application limits of the selected filling oil → 🗎 97. For vacuum applications, follow the installation instructions→ 🗎 102.
3) Product Configurator, order code for "Nominal range; PN"
4) Smallest calibratable span for the PMD75: 1 mbar (0.015 psi); Smallest calibratable span for the FMD77 and FMD78: 5 mbar (0.075 psi)
5) All PMD75 process connections are CRN-approved. If O-rings are used, the MWP is 315 bar (4 725 psi); if PTFE and CU seals are used, the MWP is 120 bar (1 800 psi).
6) "–" side: 100 bar (1 500 psi)

Deltabar S PMD75, FMD77, FMD78

Sensor	Maximum sensor measuring range		Smallest calibratable span	MWP	OPL		remains stable for a minimum of operating pressure [1]	Option [2]
	lower (LRL)	upper (URL)			on one side	on both sides		
bar (psi)	bar (psi)	bar (psi)	bar (psi)	bar (psi)	bar (psi)		$mbar_{abs}$ (psi_{abs})	
PMD75: optionally available as a gauge or absolute pressure sensor								
160 (2400) rel	-1 (-15)	160 (2400)	40 (600)	160 (2400)	240 (3600)	- [3]	10	7Q
160 (2400) abs	0	160 (2400)	4 (60)	160 (2400)	240 (3600)	- [3]	10	7V
250 (3750) rel	-1 (-15)	250 (3750)	40 (600)	250 (3750)	375 (5625)	- [3]	10	7R
250 (3750) abs	0	250 (3750)	4 (60)	250 (3750)	375 (5625)	- [3]	10	7W

1) The minimum operating pressure indicated in the table applies to silicone oil under reference operating conditions. Min. operating pressure at 85 °C (185 °F) for silicone oil: up to 10 $mbar_{abs}$ (0.15 psi_{abs}).
2) Product Configurator, order code for "Nominal range; PN"
3) Available only with blind flange on LP side.

Output

Output Signal

- 4 to 20 mA with superimposed digital communication protocol HART, 2-wire
- Digital communication signal PROFIBUS PA (Profile 3.0), 2-wire
  - Signal coding: Manchester Bus Powered (MBP): Manchester II
  - Transmission rate: 31.25 KBit/s voltage mode
- Digital communication signal FOUNDATION Fieldbus, 2-wire
  - Signal coding: Manchester Bus Powered (MBP): Manchester II
  - Transmission rate: 31.25 KBit/s voltage mode

Output	Internal + LCD	External + LCD	Internal
	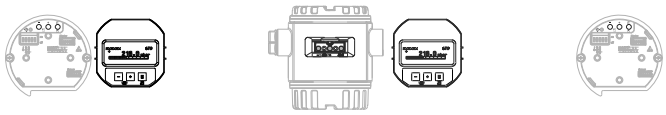 A0021280		
	Option [1]		
4 to 20mA HART	B	A	C
4 to 20mA HART, Li=0	E	D	F
PROFIBUS PA	N	M	O
FOUNDATION Fieldbus	Q	P	R

1) Product Configurator, order code for "Display, operation: "

Signal range

4 to 20 mA

3.8 mA to 20.5 mA

Signal on alarm

4 to 20 mA HART

As per NAMUR NE43.

- Max. alarm: can be set from 21 to 23 mA (factory setting: 22 mA)
- Hold measured value: last measured value is held
- Min. alarm: 3.6 mA

PROFIBUS PA

As per NAMUR NE43.

Can be set in the Analog Input Block.

Options:
- Last Valid Out Value (factory setting)
- Fail Safe Value
- Status bad

FOUNDATION Fieldbus

As per NAMUR NE43.

Can be set in the Analog Input Block.

Options:
- Last Good Value
- Fail Safe Value (factory setting)
- Wrong Value

Load

4 to 20 mA HART

In order to guarantee sufficient terminal voltage in two-wire devices, a maximum load resistance R (including line resistance) must not be exceeded depending on the supply voltage U_0 of the supply unit. In the following load diagrams, observe the position of the jumper and the explosion protection:

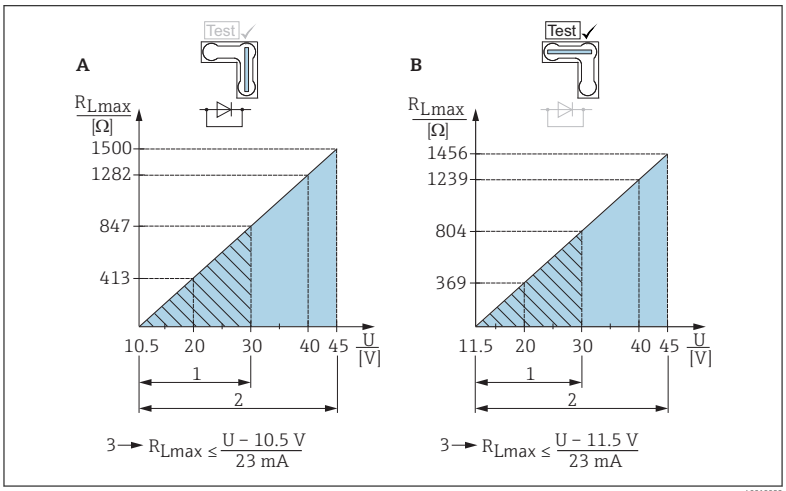

A Jumper for 4 to 20 mA test signal set to "Non-test" position
B Jumper for 4 to 20 mA test signal set to "Test" position
1 Power supply 10.5 (11.5) to 30 V DC for 1/2 G Ex ia, 1GD Ex ia, 1/2 GD Ex ia, FM IS, CSA IS, IECEx ia, NEPSI Ex ia
2 Power supply 10.5 (11.5) to 45 V DC for devices for non-hazardous areas, 1/2 D, 1/3 D, 2 G Ex d, 3 G Ex nA, FM XP, FM DIP, FM NI, CSA XP, CSA dust ignition-proof, NEPSI Ex d
3 R_{Lmax} maximum load resistance
U Supply voltage

When operating via a handheld terminal or via a PC with an operating program, a minimum communication resistance of 250 Ω must be taken into account.

Dead time, time constant

Presentation of the dead time and the time constant:

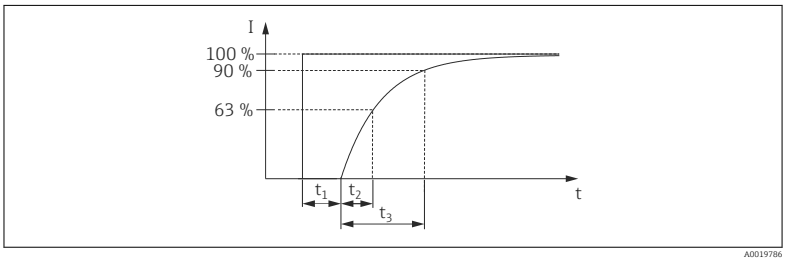

Dynamic behavior, current output

Type		Measuring cell	Dead time (t_1) [ms]	Time constant T63 (t_2) [ms]	Time constant T90 (t_3) [ms]
PMD75	max.	▪ 10 mbar (0.15 psi) ▪ 30 mbar (0.45 psi) ▪ 100 mbar (1.5 psi) ▪ 500 mbar (7.5 psi) ▪ 3 bar (45 psi) ▪ 16 bar (240 psi) ▪ 40 bar (600 psi)	45	▪ 450 ▪ 450 ▪ 60 ▪ 45 ▪ 40 ▪ 60 ▪ 60	▪ 1040 ▪ 1040 ▪ 138 ▪ 104 ▪ 92 ▪ 138 ▪ 138
		▪ 160 bar (2 400 psi) ▪ 250 bar (3 750 psi)	50	40	90
FMD77, FMD78	max.	Dependent on the diaphragm seal			

Dynamic behavior Digital output (HART electronics)

A typical burst rate of 300 ms results in the following behavior:

Type		Measuring cell	Dead time (t_1) [ms]	Dead time (t_1) [ms] + Time constant T63 (t_2) [ms]	Dead time (t_1) [ms] + Time constant T90 (t_3) [ms]
PMD75	min.	▪ 10 mbar (0.15 psi) ▪ 30 mbar (0.45 psi) ▪ 100 mbar (1.5 psi) ▪ 500 mbar (7.5 psi) ▪ 3 bar (45 psi) ▪ 16 bar (240 psi) ▪ 40 bar (600 psi) ▪ 160 bar (2 400 psi) ▪ 250 bar (3 750 psi)	205	▪ 655 ▪ 655 ▪ 265 ▪ 250 ▪ 245 ▪ 265 ▪ 265 ▪ 295 ▪ 295	▪ 1200 ▪ 1200 ▪ 298 ▪ 264 ▪ 252 ▪ 298 ▪ 298 ▪ 300 ▪ 300
	max.	▪ 10 mbar (0.15 psi) ▪ 30 mbar (0.45 psi) ▪ 100 mbar (1.5 psi) ▪ 500 mbar (7.5 psi) ▪ 3 bar (45 psi) ▪ 16 bar (240 psi) ▪ 40 bar (600 psi) ▪ 160 bar (2 400 psi) ▪ 250 bar (3 750 psi)	1005	▪ 1455 ▪ 1455 ▪ 1065 ▪ 1050 ▪ 1045 ▪ 1065 ▪ 1065 ▪ 1095 ▪ 1095	▪ 2000 ▪ 2000 ▪ 1098 ▪ 1064 ▪ 1052 ▪ 1098 ▪ 1098 ▪ 1100 ▪ 1100
FMD77, FMD78	max.	Dependent on the diaphragm seal			

Reading cycle

- Acyclic: max. 3/s, typically 1/s (depending on command # and number of preambles)
- Cyclic (burst): max. 3/s, typically 2/s

The device commands the BURST MODE functionality for cyclical value transmission via the HART communication protocol.

Cycle time (update time)

Cyclic (burst): min. 300 ms

Response time

- Acyclic: min. 330 ms, typically 590 ms (depending on command # and number of preambles)
- Cyclic (burst): min. 160 ms, typically 350 ms (depending on command # and number of preambles)

Dynamic behavior PROFIBUS PA

A typical PLC cycle time of 1 s results in the following behavior:

Type		Measuring cell	Dead time (t_1) [ms]	Dead time (t_1) [ms] + Time constant T63 (t_2) [ms]	Dead time (t_1) [ms] + Time constant T90 (t_3) [ms]
PMD75	min.	▪ 10 mbar (0.15 psi) ▪ 30 mbar (0.45 psi) ▪ 100 mbar (1.5 psi) ▪ 500 mbar (7.5 psi) ▪ 3 bar (45 psi) ▪ 16 bar (240 psi) ▪ 40 bar (600 psi)	80	▪ 530 ▪ 530 ▪ 140 ▪ 125 ▪ 120 ▪ 140 ▪ 140	▪ 1075 ▪ 1075 ▪ 173 ▪ 139 ▪ 127 ▪ 173 ▪ 173
	max.	▪ 10 mbar (0.15 psi) ▪ 30 mbar (0.45 psi) ▪ 100 mbar (1.5 psi) ▪ 500 mbar (7.5 psi) ▪ 3 bar (45 psi) ▪ 16 bar (240 psi) ▪ 40 bar (600 psi)	1280	▪ 1730 ▪ 1730 ▪ 1340 ▪ 1325 ▪ 1320 ▪ 1340 ▪ 1340	▪ 2275 ▪ 2275 ▪ 1373 ▪ 1339 ▪ 1327 ▪ 1373 ▪ 1373
FMD77, FMD78	max.	Dependent on the diaphragm seal			

Reading cycle (PLC)

- Acyclic: Typically 25/s
- Cyclic: Typically 30/s (depending on the number and type of the function blocks used in the closed-control loop)

Cycle time (update time)

min. 200 ms

The cycle time in a bus segment in cyclic data communication depends on the number of devices, on the segment coupler used and on the internal PLC cycle time. A new measured value can be determined up to five times a second.

Response time

- Acyclic: Approx. 60 ms to 70 ms (depending on Min. Slave Interval)
- Cyclic: Approx. 10 ms to 13 ms (depending on Min. Slave Interval)

Dynamic behavior FOUNDATION Fieldbus

A typical configuration for the macro cycle time (host system) of 1 s results in the following behavior:

Type		Measuring cell	Dead time (t_1) [ms]	Dead time (t_1) [ms] + Time constant T63 (t_2) [ms]	Dead time (t_1) [ms] + Time constant T90 (t_3) [ms]
PMD75	min.	▪ 10 mbar (0.15 psi) ▪ 30 mbar (0.45 psi) ▪ 100 mbar (1.5 psi) ▪ 500 mbar (7.5 psi) ▪ 3 bar (45 psi) ▪ 16 bar (240 psi) ▪ 40 bar (600 psi)	90	▪ 540 ▪ 540 ▪ 150 ▪ 135 ▪ 130 ▪ 150 ▪ 150	▪ 1085 ▪ 1085 ▪ 183 ▪ 149 ▪ 137 ▪ 183 ▪ 183
	max.	▪ 10 mbar (0.15 psi) ▪ 30 mbar (0.45 psi) ▪ 100 mbar (1.5 psi) ▪ 500 mbar (7.5 psi) ▪ 3 bar (45 psi) ▪ 16 bar (240 psi) ▪ 40 bar (600 psi)	1090	▪ 1540 ▪ 1540 ▪ 1150 ▪ 1135 ▪ 1130 ▪ 1150 ▪ 1150	▪ 2085 ▪ 2085 ▪ 1183 ▪ 1149 ▪ 1137 ▪ 1183 ▪ 1183
FMD77, FMD78	max.	Dependent on the diaphragm seal			

Reading cycle

- Acyclic: Typically 10/s
- Cyclic: max. 10/s (dependent on the number and type of function blocks used in a closed-control loop)

Cycle time (update time)

Cyclic: Min. 100 ms

Response time

- Acyclic: Typically 100 ms (for standard bus parameter settings)
- Cyclic: max. 20 ms (for standard bus parameter settings)

Damping

A damping affects all outputs (output signal, display):
- via local display, handheld terminal or PC with operating program, continuous from 0 to 999 s
- Also for HART and PROFIBUS PA: Via DIP switch on the electronic insert, switch position "on" = set value and "off"
- Factory setting: 2 s

Alarm current

Designation	Option [1]
Min alarm current	J
HART burst mode PV	J
Min alarm current + HART burst mode PV	J

1) Product Configurator, "Additional options 1" and "Additional options 2" ordering feature

Firmware version

Designation	Option [1]
02.20.zz, HART 7, DevRev22	72
02.11.zz, HART 5, DevRev21	73
04.00.zz, FF, DevRev07	74
04.01.zz, PROFIBUS PA, DevRev03	75
02.10.zz, HART 5, DevRev21	76
03.00.zz, FF, DevRev06	77
04.00.zz, PROFIBUS PA	78
02.30.zz, HART 7	In preparation

1) Product Configurator, order code for "Firmware version"

HART protocol-specific data

Manufacturer ID	17 (11 hex)
Device type code	23 (17 hex)
Device revision	▪ 21 (15 hex) - SW version 02.1y.zz - HART specification 5 ▪ 22 (16 hex) - SW version 02.2y.zz - HART specification 7
HART specification	▪ 5 ▪ 7
DD revision	▪ 4 (Russian in language selection) for device revision 21 ▪ 3 (Dutch in language selection) for device revision 21 ▪ 1 for device revision 22
Device description files (DTM, DD)	Information and files at: ▪ www.endress.com ▪ www.fieldcommgroup.org
HART load	Min. 250 Ω

HART device variables	The measured values are assigned to the device variables as follows: **Measured values for PV (primary variable)** ▪ Pressure ▪ Flow ▪ Level ▪ Tank content **Measured values for SV, TV (second and third variable)** ▪ Pressure ▪ Totalizer **Measured values for QV (fourth variable)** Temperature
Supported functions	▪ Burst mode ▪ Additional transmitter status ▪ Device locking ▪ Alternative operating modes

PROFIBUS PA protocol-specific data

Manufacturer ID	17 (11 hex)
Identification number	1542 hex
Profile version	3.0 ▪ SW version 03.00.zz ▪ SW version 04.00.zz 3.02 SW version 04.01.zz (device revision 3) Compatibility with SW version 03.00.zz and higher.
GSD revision	▪ 4 (SW version 3.00.zz and 4.00.zz) ▪ 5 (device revision 3)
DD revision	▪ 1 (SW version 3.00.zz and 4.00.zz) ▪ 1 (device revision 3)
GSD file DD files	Information and files at: ▪ www.endress.com ▪ www.profibus.org
Output values	**Measured value for PV (via Analog Input Function Block)** ▪ Pressure ▪ Level ▪ Flow ▪ Tank content **Measured value for SV** ▪ Pressure ▪ Temperature **Measured value for QV** Totalizer
Input values	Input value sent from PLC, can be shown on display
Supported functions	▪ Identification & maintenance Simplest device identifier on the control system and nameplate ▪ Condensed status (only with Profile Version 3.02) ▪ Automatic ID number adjustment and switchable to the following ID numbers (only with Profile Version 3.02): – 9700: Profile-specific transmitter identification number with the "Classic" or "Condensed" status". – 1504: Compatibility mode for the old Deltabar S generation (FMD230, FMD630, FMD633, PMD230, PMD235). – 1542: Identification number of the new Deltabar S generation (FMD77, FMD78, PMD75). ▪ Device locking: The device can be locked by hardware or software.

FOUNDATION Fieldbus protocol-specific data

Manufacturer ID	452B48 hex
Device type	1009 hex
Device revision	▪ 6 - SW version 03.00.zz ▪ 7 - SW version 04.00.zz (FF-912)

DD revision	▪ 3 (device revision 6) ▪ 2 (device revision 7)
CFF revision	▪ 4 (device revision 6) ▪ 1 (device revision 7)
DD files CFF files	Information and files at: ▪ www.endress.com ▪ www.fieldcommgroup.org
Device tester version (ITK version)	▪ 5.0 (device revision 6) ▪ 6.01 (device revision 7)
Number of ITK test campaign	▪ IT054700 (Device Revision 6) ▪ IT085400 (Device Revision 7)
Link Master (LAS) capable	Yes
Choice of "Link Master" and "Basic Device"	Yes, factory setting is Basic Device
Node address	Factory setting: 247 (F7 hex)
Supported functions	Field diagnostics profile (only with FF912) The following methods are supported: ▪ Restart ▪ Configure error as warning or alarm ▪ HistoROM ▪ Peakhold ▪ Alarm info ▪ Sensor trim
Number of VCRs	▪ 44 (device revision 6) ▪ 24 (device revision 7)
Number of link objects in VFD	50

Virtual communication references (VCRs)

	Device revision 6	Device revision 7
Permanent entries	44	1
Client VCRs	0	0
Server VCRs	5	10
Source VCRs	8	43
Sink VCRs	0	0
Subscriber VCRs	12	43
Publisher VCRs	19	43

Link settings

	Device revision 6	Device revision 7
Slot time	4	4
Min. Inter PDU delay	12	10
Max. response delay	10	10

Transducer Blocks

Block	Content	Output values
TRD1 Block	Contains all parameters related to the measurement	▪ Pressure, flow or level (channel 1) ▪ Process temperature (channel 2)
Service Block	Contains service information	▪ Pressure after damping (channel 3) ▪ Pressure peakhold indicator (channel 4) ▪ Counter for max. pressure transgressions (channel 5)
Dp Flow Block	Contains flow and totalizer parameter	Totalizer 1 (channel 6)
Diagnostic Block	Contains diagnostic information	Error code via DI channels (channel 0 to 16)
Display Block	Contains parameters to configure the onsite display	No output values

Function blocks

Block	Content	Number blocks	Execution time		Functionality	
			Device Revision 6	Device Revision 7	Device Revision 6	Device Revision 7
Resource Block	This block contains all the data that uniquely identifies the device; it is an electronic version of a nameplate for the device.	1			enhanced	enhanced
Analog Input Block 1 Analog Input Block 2 Analog Input Block 3	The AI Block receives the measuring data from the Sensor Block, (selectable via a channel number) and makes the data available to other function blocks at its output. Enhancement: Digital outputs for process alarms, fail safe mode	3	45 ms	45 ms (without trend and alarm reports)	enhanced	enhanced
Digital Input Block	This block contains the discrete data of the Diagnose Block (selectable via a channel number 0 to 16) and provides them for other blocks at the output.	1	40 ms	30 ms	standard	enhanced
Digital Output Block	This block converts the discrete input and thus initiates an action (selectable via a channel number) in the DP Flow Block or in the Service Block. Channel 1 resets the counter for max. pressure transgressions.	1	60 ms	40 ms	standard	enhanced
PID Block	This block is used as a proportional-integral-derivative controller and can be used universally for closed-loop-control in the field. It enables cascade mode and feedforward control. Input IN can be indicated on the display. The selection is performed in the Display Block (DISPLAY_MAIN_LINE_CONTENT).	1	120 ms	70 ms	standard	enhanced
Arithmetic Block	This block is designed to permit simple use of popular measurement math functions. The user does not have to know how to write equations. The math algorithm is selected by name, chosen by the user for the function to be performed.	1	50 ms	40 ms	standard	enhanced
Input Selector Block	The Input Selector Block facilitates the selection of up to four inputs and generates an output based on the configured action. This block normally receives its inputs from AI Blocks. The block performs maximum, minimum, average and 'first good' signal selection. Inputs IN1 to IN4 can be indicated on the display. The selection is performed in the Display Block (DISPLAY_MAIN_LINE_CONTENT).	1	35 ms	35 ms	standard	enhanced
Signal Characterizer Block	The Signal Characterizer Block has two sections, each with an output that is a non-linear function of the respective input. The non-linear function is generated by a single look-up table with 21 arbitrary x-y pairs.	1	30 ms	40 ms	standard	enhanced

Block	Content	Number blocks	Execution time		Functionality	
			Device Revision 6	Device Revision 7	Device Revision 6	Device Revision 7
Integrator Block	The Integrator Block integrates a variable as a function of the time or accumulates the counts from a Pulse Input Block. The block can be used as a totalizer that counts up until a reset, or as a batch totalizer whereby the integrated value is compared against a target value generated before or during the control routine and generates a binary signal when the target value is reached.	1	35 ms	40 ms	standard	enhanced
Analog Alarm Block	This block contains all process alarm conditions (working like a comparator) and represents them at the output.	1	35 ms	35 ms	standard	enhanced

Additional function block information:

Instantiatable function blocks	YES	YES
Number of additional instantiatable function blocks	9	4

Power supply

WARNING

Electrical safety is compromised by an incorrect connection!

- When using the measuring device in hazardous areas, the relevant national standards and regulations as well as the Safety Instructions or Installation or Control Drawings must also be observed.→ 113.
- All explosion protection data are given in separate documentation which is available upon request. The Ex documentation is supplied as standard with all Ex devices→ 113.
- Devices with integrated overvoltage protection must be grounded→ 26.
- Protective circuits against reverse polarity, HF influences and overvoltage peaks are integrated.

Terminal assignment

4 to 20 mA HART

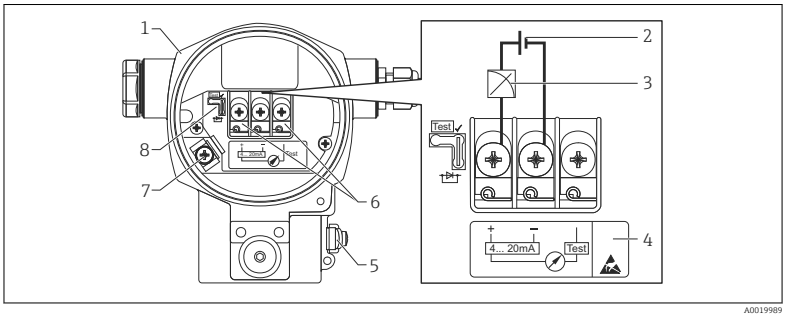

A0019989

1 *Housing*
2 *Supply voltage*
3 *4 to 20 mA*
4 *Devices with integrated overvoltage protection are labeled "OVP" (overvoltage protection) here.*
5 *External ground terminal*
6 *4 to 20 mA test signal between positive and test terminal*
7 *Internal ground terminal*
8 *Jumper for 4 to 20 mA test signal*

PROFIBUS PA and FOUNDATION Fieldbus

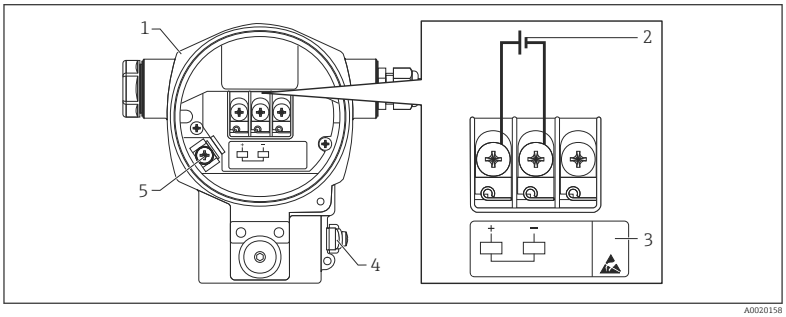

A0020158

1 *Housing*
2 *Supply voltage*
3 *Devices with integrated overvoltage protection are labeled "OVP" (overvoltage protection) here.*
4 *External ground terminal*
5 *Internal ground terminal*

Supply voltage

4 to 20 mA HART

Electronic version	Jumper for 4 to 20 mA test signal in "Test" position (delivery status)	Jumper for 4 to 20 mA test signal in "Non-test" position
Version for non-hazardous area	11.5 to 45 V DC	10.5 to 45 V DC
Intrinsically safe	11.5 to 30 V DC	10.5 to 30 V DC
▪ Other types of protection ▪ Devices without certificate	11.5 to 45 V DC (versions with 35 V DC plug-in connection)	10.5 to 45 V DC (versions with 35 V DC plug-in connection)

Measuring a 4 to 20 mA test signal

Jumper position for test signal	Description
	▪ Measurement of 4 to 20 mA test signal via the positive and test terminal: Possible. (Thus, the output current can be measured without interruption via the diode.) ▪ Delivery status ▪ Minimum supply voltage: 11.5 V DC
	▪ Measurement of 4 to 20 mA test signal via positive and test terminal: Not possible. ▪ Minimum supply voltage: 10.5 V DC

PROFIBUS PA

- Version for non-hazardous areas: 9 to 32 V DC
- Ex ia: 10.5 to 30 V DC

FOUNDATION Fieldbus

- Version for non-hazardous areas: 9 to 32 V DC
- Ex ia: 10.5 to 30 V DC

Current consumption

- PROFIBUS PA: 13 mA ±1 mA, switch-on current corresponds to IEC 61158-2, Clause 21
- FOUNDATION Fieldbus: 15.5 mA ±1 mA, switch-on current corresponds to IEC 61158-2, Clause 21

Electrical connection

PROFIBUS PA

The digital communication signal is transmitted to the bus via a two-wire connection. The bus also provides the power supply. For further information on the network structure and grounding, and for further bus system components such as bus cables, see the relevant documentation, e.g. Operating Instructions BA00034S "PROFIBUS DP/PA: Guidelines for planning and commissioning" and the PNO Guideline.

FOUNDATION Fieldbus

The digital communication signal is transmitted to the bus via a two-wire connection. The bus also provides the power supply. For further information on the network structure and grounding and for further bus system components such as bus cables, see the relevant documentation, e.g. Operating Instructions BA00013S "FOUNDATION Fieldbus Overview" and the FOUNDATION Fieldbus Guideline.

Terminals

- Supply voltage and internal ground terminal: 0.5 to 2.5 mm^2 (20 to 14 AWG)
- External ground terminal: 0.5 to 4 mm^2 (20 to 12 AWG)

Cable entries

Approval	Cable gland	Clamping area
Standard, II 1/2 G Ex ia, IS	Plastic M20x1.5	5 to 10 mm (0.2 to 0.39 in)
ATEX II 1/2 D, II 1/3 D, II 1/2 GD Ex ia, II 1 GD Ex ia, II 3 G Ex nA	Metal M20x1.5 (Ex e)	7 to 10.5 mm (0.28 to 0.41 in)

For additional technical data, see section on housing → 49

Device plug

Devices with Harting plug Han7D

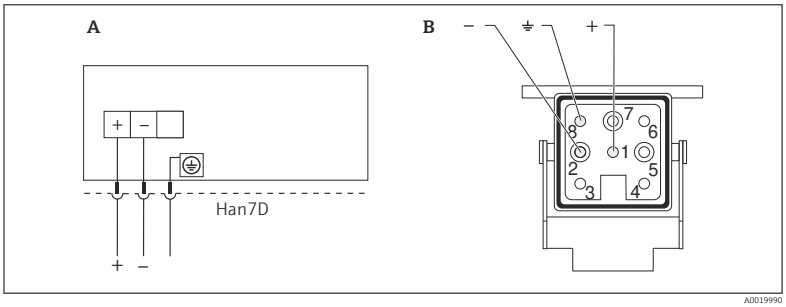

A Electrical connection for devices with Harting plug Han7D
B View of the plug-in connection on the device

Material: CuZn, gold-plated plug-in jack and plug

Devices with M12 plug

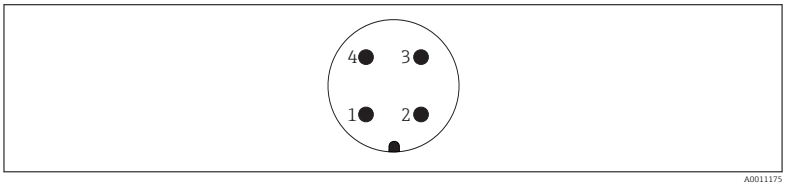

1 Signal +
2 Not assigned
3 Signal –
4 Ground

Endress+Hauser offers the following accessories for devices with an M12 plug:

Plug-in jack M 12x1, straight
- Material: Body PA; coupling nut CuZn, nickel-plated
- Degree of protection (fully locked): IP67
- Order number: 52006263

Plug-in jack M 12x1, elbowed
- Material: Body PBT/PA; coupling nut GD-Zn, nickel-plated
- Degree of protection (fully locked): IP67
- Order number: 71114212

Cable 4x0.34 mm^2 (20 AWG) with M12 socket, elbowed, screw plug, length 5 m (16 ft)
- Material: Body PUR; coupling nut CuSn/Ni; cable PVC
- Degree of protection (fully locked): IP67
- Order number: 52010285

Devices with 7/8" plug

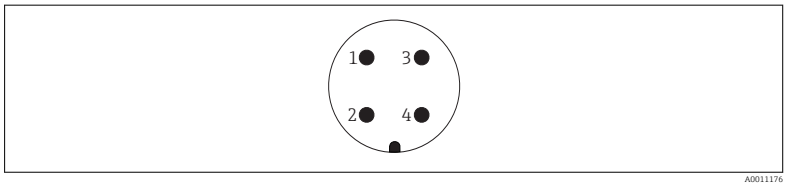

1 Signal –
2 Signal +
3 Not assigned
4 Shielding

External thread: 7/8 - 16 UNC
- Material: 316L (1.4401)
- Degree of protection: IP68

Cable specification

HART

- Endress+Hauser recommends using shielded, twisted-pair two-wire cables.
- Cable outer diameter: 5 to 9 mm (0.2 to 0.35 in) depending on the cable entry used → 🗎 25

PROFIBUS PA

Use a twisted, shielded twin-core cable, preferably cable type A.

For further information regarding cable specifications, see the Operating Instructions BA00034S "PROFIBUS DP/PA: Guidelines for planning and commissioning", the PNO guideline 2.092 "PROFIBUS PA User and Installation Guideline" and IEC 61158-2 (MBP).

FOUNDATION Fieldbus

Use a twisted, shielded twin-core cable, preferably cable type A.

For further information on the cable specifications, see Operating Instructions BA00013S "FOUNDATION Fieldbus Overview", FOUNDATION Fieldbus Guideline and IEC 61158-2 (MBP).

Start-up current

12 mA

Residual ripple

Without influence on 4 to 20 mA signal up to ±5% residual ripple within the permitted voltage range [according to HART hardware specification HCF_SPEC-54 (DIN IEC 60381-1)].

Overvoltage protection (optionally for HART, PROFIBUS PA and FOUNDATION Fieldbus)

- Overvoltage protection:
  - Nominal functioning DC voltage: 600 V
  - Nominal discharge current: 10 kA
- Surge current check î = 20 kA satisfied as per DIN EN 60079-14: 8/20 µs
- Arrester AC current check I = 10 A satisfied

Ordering information: Product Configurator, order code for "Additional options 1" or Additional options 2", option "M"

NOTICE

Device could be destroyed!

▶ Devices with integrated overvoltage protection must be grounded.

Influence of power supply

≤0.0006 % of URL/1 V

Performance characteristics of differential pressure / pressure transmitter (sensor module + electronics module)

Preamble

The performance characteristic of the dP transmitter refers to "Accuracy of the transmitter". The factors influencing accuracy can be divided into two groups
- Total performance of transmitter → 🗎 28
- Installation dependent influencing factors → 🗎 36

Total performance of transmitter

Transmitter→ 🗎 28 total performance comprises the reference accuracy, the ambient temperature effect and the static pressure and is calculated using the following formula:

Total performance	=	$\pm \sqrt{(E1)^2 + (E2)^2 + (E3)^2}$
E1	=	Reference accuracy → 🗎 27
E2	=	Ambient temperature effect per ±28 °C (50 °F) (corresponds to the range of −3 to +53 °C (+27 to +127 °F)) → 🗎 30
E3	=	Static pressure effect → 🗎 31

Reference accuracy [E1]

PMD75: Reference accuracy E1 as % [1] The specifications refer to the calibrated span/Upper Range Value (URV).		
Measuring cell	**Standard**	**Platinum**
10 mbar (0.15 psi)	▪ TD 1:1 = ±0.075 ▪ TD > 1:1 = ±0.075 · TD	▪ TD 1:1 = ±0.05 ▪ TD > 1:1 = ±0.075 · TD
30 mbar (0.45 psi)	▪ TD ≤ 3:1 = ±0.075 ▪ TD > 3:1 = ±0.025 · TD	▪ TD 1:1 = ±0.05 ▪ TD > 1:1 to TD ≤ 3:1 = ±0.075 ▪ TD > 3:1 ±0.025 · TD
100 mbar (1.5 psi)	▪ TD ≤ 5:1 = ±0.05 ▪ TD > 5:1 = ±|0.009 · TD + 0.005|	TD ≥ 1:1 = ±0.04
500 mbar (7.5 psi), 3 bar (45 psi) 16 bar (240 psi), 40 bar (600 psi)	▪ TD ≤ 15:1 = ±0.05 ▪ TD > 15:1 = ±|0.0015 · TD + 0.0275|	TD ≥ 1:1 = ±0.035
160 bar (2 400 psi) rel/abs , 250 bar (3 750 psi) rel/abs	▪ TD ≤ 5:1 = ±0.10 ▪ TD > 5:1 = ±0.02 · TD	-

1) Reference accuracy comprises the non-linearity [DIN EN 61298-2] including the hysteresis [DIN EN 61298-2] and the non-repeatability [DIN EN 61298-2] in accordance with the limit point method as per [DIN EN 60770]. Reference accuracy for standard up to TD 100:1, for platinum up to TD 5:1. Valid for all membrane materials.

FMD77/FMD78: Reference accuracy as % [1] The specifications refer to the calibrated span / upper range value (URV) [2].		
Measuring cell	**FMD77**	**FMD77 with capillary on low-pressure side and FMD78**
100 mbar (1.5 psi)	▪ TD ≤ 5:1 = ±0.10 ▪ TD > 5:1 = ±0.02 · TD	▪ TD ≤ 5:1 = ±0.15 ▪ TD > 5:1 = ±0.03 · TD
500 mbar (7.5 psi)	▪ TD ≤ 15:1 = ±0.075 ▪ TD > 15:1 = ±|0.0015 · TD + 0.053|	▪ TD ≤ 5:1 = ±0.15 ▪ TD > 5:1 = ±0.03 · TD
3 bar (45 psi), 16 bar (240 psi)	▪ TD ≤ 15:1 = ±0.075 ▪ TD > 15:1 = ±|0.0015 · TD + 0.053|	▪ TD ≤ 15:1 = ±0.1 ▪ TD > 15:1 = ±|0.006 · TD + 0.01|
40 bar (600 psi)	-	▪ TD ≤ 15:1 = ±0.1 ▪ TD > 15:1 = ±|0.006 · TD + 0.01|

1) Reference accuracy comprises the non-linearity [DIN EN 61298-2] including the hysteresis [DIN EN 61298-2] and the non-repeatability [DIN EN 61298-2] in accordance with the limit point method as per [DIN EN 60770]. Reference accuracy for standard up to TD 100:1. The specifications refer to the calibrated span / upper range value (URV).
2) FMD77/FMD78: No diaphragm seal errors are taken into account. Diaphragm seal errors can be calculated separately in the Applicator diaphragm seal calculation module. Link to online tool Applicator: www.endress.com/applicator → Sizing Diaphragm Seal

Please refer to the next chapter “Detailed performance explanation and calculation” for further explanations on "Ambient temperature effect" as well as "Static pressure effect" .

Total performance – Specification values

PMD75: total performance as % The specifications refer to the calibrated span/Upper Range Value (URV).										
Measuring cell	**Standard [1]**					**Platinum [1]**				
	TD 1:1	**TD 2:1**	**TD 3:1**	**TD 4:1**	**TD 5:1**	**TD 1:1**	**TD 2:1**	**TD 3:1**	**TD 4:1**	**TD 5:1**
10 mbar (0.15 psi)	±0.30	±0.52	±0.74	±0.96	±1.18	±0.26	±0.44	±0.61	±0.78	±0.96
30 mbar (0.45 psi)	±0.26	±0.41	±0.56	±0.72	±0.88	±0.24	±0.38	±0.52	±0.67	±0.81
100 mbar (1.5 psi)	±0.20	±0.27	±0.34	±0.41	±0.49	±0.20	±0.26	±0.33	±0.40	±0.47
500 mbar (7.5 psi)	±0.11	±0.14	±0.17	±0.20	±0.23	±0.10	±0.13	±0.16	±0.19	±0.22
3 bar (45 psi)	±0.14	±0.18	±0.23	±0.28	±0.33	±0.11	±0.13	±0.16	±0.18	±0.20
16 bar (240 psi)	±0.12	±0.16	±0.20	±0.25	±0.30	±0.10	±0.12	±0.14	±0.16	±0.18
40 bar (600 psi)	±0.12	±0.16	±0.20	±0.25	±0.30	±0.10	±0.12	±0.14	±0.16	±0.18
160 bar (2 400 psi) rel/abs 250 bar (3 750 psi) rel/abs	±0.17	±0.20	±0.24	±0.28	±0.32	-				

1) The specification values apply to the temperature range per ±28 °C (50 °F) (corresponds to the range of −3 to +53 °C (+27 to +127 °F)) for all measuring cells. The specifications apply to a static pressure of 7 bar (105 psi) for measuring cells of 10 mbar (0.15 psi) to 500 mbar (7.5 psi), for larger measuring cells of 70 bar (1 050 psi). The specification values apply to the analog output (i.e. including electronics errors). The specification values apply to membrane material AISI 316L (1.4435), Alloy C .

Long-term stability

PMD75/FMD77/FMD78: long-term stability as % The specifications refer to the upper range limit (URL) [1].			
Measuring cell	Standard & platinum		
	1 year	5 years	10 years
10 mbar (0.15 psi)	± 0.200	± 0.280	± 0.310
30 mbar (0.45 psi)	± 0.200	± 0.280	± 0.310
100 mbar (1.5 psi)	± 0.080	± 0.140	± 0.270
500 mbar (7.5 psi)	± 0.025	± 0.050	± 0.075
3 bar (45 psi)	± 0.038	± 0.075	± 0.150
16 bar (240 psi)	± 0.025	± 0.110	± 0.210
40 bar (600 psi)	± 0.050	± 0.070	± 0.100
160 bar (2 400 psi) rel/abs 250 bar (3 750 psi) rel/abs	± 0.050	± 0.070	± 0.100

1) FMD77FMD78: No diaphragm seal errors are taken into account. Diaphragm seal errors can be calculated separately in the Applicator diaphragm seal calculation module. Link to online tool Applicator: www.endress.com/applicator → Sizing Diaphragm Seal

Detailed Performance Explanation and Calculation

To calculate the total performance outside the temperature range of −3 to +53 °C (+27 to +127 °F) or for a membrane material other than 1.4435/316L or Alloy C 276, please refer to the following sections: "Ambient temperature effect", "Static pressure effect" and "Calculating the total performance" [1].

Ambient temperature effect [E2]

- $E2 = (E2_M \cdot CF_1 \cdot CF_2) + E2_E + E2_{LT}$
- $E2_M$ = Main temperature error
- CF_1 = Temperature range correction factor
- CF_2 = Membrane material correction factor (thermal)
- $E2_E$ = Electronics error for analog output
- $E2_{LT}$ = low temperature error

$E2_M$ - Main temperature error

The output changes due to the effect of ambient temperature [IEC 61298-3] with respect to reference temperature [DIN 16086]. The values specify the maximum error due to min./max. ambient or process temperature conditions.

PMD75/FMD77/FMD78: main temperature error $E2_M$ as % per ±28 °C (50 °F) (corresponds to the range of −3 to +53 °C (+27 to +127 °F)) The specifications refer to the calibrated span/Upper Range Value (URV).		
Measuring cell	**Standard**	**Platinum**
10 mbar (0.15 psi), 30 mbar (0.45 psi)	± (0.14 · TD + 0.04)	± (0.14 · TD + 0.04)
100 mbar (1.5 psi)	± (0.07 · TD + 0.07)	± (0.07 · TD + 0.07)
500 mbar (7.5 psi)	± (0.03 · TD + 0.017)	± (0.03 · TD + 0.017)
3 bar (45 psi), 16 bar (240 psi), 40 bar (600 psi)	± (0.012 · TD + 0.017)	± (0.012 · TD + 0.017)
160 bar (2 400 psi) rel/abs	± (0.042 · TD + 0.04)	-
250 bar (3 750 psi) rel/abs	± (0.022 · TD + 0.04)	-

CF_1 - Temperature range correction factor

PMD75/FMD77/FMD78: correction factor CF_1		
Measuring cell	**Temperature range**	**Factor, CF_1**
For all measuring cells	25 °C ± 28 °C (−3 to +53 °C (+27 to +127 °F))	1
	−32 to −4 °C (−26 to +25 °F) and +54 to +85 °C (+129 to +185 °F)	2
	−50 to −33 °C (−58 to −27 °F)	2.3

CF_2 - Membrane material correction factor (thermal) (only for PMD75)

PMD75: correction factor CF_2					
Measuring cell	**AISI 316L**	**Alloy C**	**Gold-Rhodium**	**Monel**	**Tantalum**
10 mbar (0.15 psi)	1.0	1.0	2.5	2.8	2.3
30 mbar (0.45 psi)	1.0	1.0	2.5	2.8	2.3
100 mbar (1.5 psi)	1.0	1.0	1.1	1.1	1.1
500 mbar (7.5 psi)	1.0	1.0	1.8	1.8	1.8

1) FMD77FMD78: No diaphragm seal errors are taken into account. Diaphragm seal errors can be calculated separately in the Applicator diaphragm seal calculation module. Link to online tool Applicator: www.endress.com/applicator → Sizing Diaphragm Seal

PMD75: correction factor CF_2					
Measuring cell	AISI 316L	Alloy C	Gold-Rhodium	Monel	Tantalum
3 bar (45 psi)	1.0	1.0	3.1	3.1	3.1
16 bar (240 psi)	1.0	1.0	4.7	4.7	4.7
40 bar (600 psi)	1.0	1.0	3.1	3.1	3.1
160 bar (2 400 psi) rel/abs 250 bar (3 750 psi) rel/abs	1.0	1.0	-	-	-

$E2_E$ - Electronics error

PMD75/FMD77/FMD78: electronics error $E2_E$ as % The specifications refer to the calibrated span/Upper Range Value (URV).			
Measuring cell	Electronics	Temperature range	Error [1]
For all measuring cells	Analog output (4 to 20 mA)	−50 to +85 °C (−58 to +185 °F)	0.05
	Digital output (HART)	−50 to +85 °C (−58 to +185 °F)	0
	Digital output (PA/FF)	−40 to +85 °C (−40 to +185 °F)	0

1) The additional electronics error that occurs in the temperature range −50 to −41 °C (−58 to −42 °F) is covered by $E2_{LT}$.

$E2_{LT}$ - low temperature error

PMD75/FMD77/FMD78: low temperature error $E2_{LT}$ as % The specifications refer to the calibrated span/Upper Range Value (URV).		
Measuring cell	Temperature range	Problem
For all measuring cells	−40 to +85 °C (−40 to +185 °F)	0
	−50 to −41 °C (−58 to −42 °F)	1.5

Static pressure effect [E3]

- $E3 = E3_M \cdot CF_3$
- $E3_M$ = main static pressure error ($E3_M$ = zero point error + span error)
- CF_3 = Membrane material correction factor (static pressure)

$E3_M$ - Main static pressure error

Static pressure effect refers to the effect on the output due to changes in process static pressure. It is the difference between the output at each static pressure and the output at atmospheric pressure [IEC 61298-3]. It is the combination of influence of the operating pressure on the zero point and span.

PMD75/FMD77/FMD78: main static pressure error $E3_M$ as % The specifications refer to the calibrated span/Upper Range Value (URV).				
Measuring cell	Standard		Platinum	
	on the zero point [1]	on the span	on the zero point [1]	on the span
10 mbar (0.15 psi)	± 0.15 · TD per 7 bar (105 psi)	± 0.035 per 7 bar (105 psi)	± 0.07 · TD per 7 bar (105 psi)	± 0.035 per 7 bar (105 psi)
30 mbar (0.45 psi)	± 0.70 · TD per 70 bar (1 050 psi)	± 0.14 per 70 bar (1 050 psi)	± 0.25 · TD per 70 bar (1 050 psi)	± 0.14 per 70 bar (1 050 psi)
100 mbar (1.5 psi)	± 0.203 · TD per 70 bar (1 050 psi)	± 0.15 per 70 bar (1 050 psi)	± 0.077 · TD per 70 bar (1 050 psi)	± 0.15 per 70 bar (1 050 psi)
500 mbar (7.5 psi)	± 0.07 · TD per 70 bar (1 050 psi)	± 0.10 per 70 bar (1 050 psi)	± 0.028 · TD per 70 bar (1 050 psi)	± 0.10 per 70 bar (1 050 psi)

PMD75/FMD77/FMD78: main static pressure error $E3_M$ as % The specifications refer to the calibrated span/Upper Range Value (URV).				
Measuring cell	Standard		Platinum	
	on the zero point [1]	on the span	on the zero point [1]	on the span
3 bar (45 psi)	± 0.049 · TD per 70 bar (1 050 psi)	± 0.05 per 70 bar (1 050 psi)	± 0.021 · TD per 70 bar (1 050 psi)	± 0.05 per 70 bar (1 050 psi)
16 bar (240 psi), 40 bar (600 psi)	± 0.049 · TD per 70 bar (1 050 psi)	± 0.02 per 70 bar (1 050 psi)	± 0.021 · TD per 70 bar (1 050 psi)	± 0.02 per 70 bar (1 050 psi)
160 bar (2 400 psi) rel/abs 250 bar (3 750 psi) rel/abs	-	-	-	-

1) The influence of the operating pressure on the zero point can be corrected. Please refer to operating instructions and chapter Commissioning → Position adjustment.

CF_3 – Membrane material correction factor (static pressure) (applicable only to PMD75)

PMD75: membrane material correction factor $CF3_3$					
Measuring cell	AISI 316L	Alloy C	Gold-Rhodium	Monel	Tantalum
10 mbar (0.15 psi)	1.0	1.0	1.0	1.4	2.1
30 mbar (0.45 psi)	1.0	1.0	1.5	2.0	3.1
100 mbar (1.5 psi)	1.0	1.0	2.5	2.5	2.5
500 mbar (7.5 psi)	1.0	1.0	1.2	1.2	1.8
3 bar (45 psi)	1.0	1.0	2.1	2.1	2.8
16 bar (240 psi)	1.0	1.0	3.0	3.0	4.0
40 bar (600 psi)	1.0	1.0	3.0	3.0	4.0
160 bar (2 400 psi) rel/abs 250 bar (3 750 psi) rel/abs	-	-	-	-	-

Total error

Total error = total performance + long-term stability

Total performance as % of the set span with TD 1:1 → 🗎 28

Long-term stability as % of the upper range limit (URL) → 🗎 29

PMD75: total error as % The specifications refer to the upper range limit (URL).						
Measuring cell	Standard [1]			Platinum [1]		
	1 year	5 years	10 years	1 year	5 years	10 years
10 mbar (0.15 psi)	± 0.50	± 0.58	± 0.61	± 0.46	± 0.54	± 0.57
30 mbar (0.45 psi)	± 0.46	± 0.54	± 0.57	± 0.44	± 0.52	± 0,55
100 mbar (1.5 psi)	± 0.28	± 0.34	± 0,47	± 0.28	± 0.34	± 0,47
500 mbar (7.5 psi)	± 0.14	± 0.16	± 0.19	± 0,13	± 0.15	± 0.18
3 bar (45 psi)	± 0.17	± 0.21	± 0.29	± 0.15	± 0.19	± 0.26
16 bar (240 psi)	± 0.14	± 0.23	± 0.33	± 0.12	± 0.21	± 0.31
40 bar (600 psi)	± 0.17	± 0.19	± 0.22	± 0.15	± 0.17	± 0.20
160 bar (2 400 psi) rel/abs 250 bar (3 750 psi) rel/abs	± 0.22	± 0.24	± 0,27	-		

1) The specification values apply to the temperature range per ±28 °C (50 °F) (corresponds to the range of −3 to +53 °C (+27 to +127 °F)) for all measuring cells. The specifications apply to a static pressure of 7 bar (105 psi) for measuring cells of 10 mbar (0.15 psi) to 500 mbar (7.5 psi), for larger measuring cells of 70 bar (1 050 psi). The specification values apply to the analog output (i.e. including electronics errors). The specification values apply to membrane material AISI 316L (1.4435), Alloy C .

Performance characteristics - calculation example and additional information

Calculating the total performance in 5 steps

Data (Example)

Measuring Conditions / Device configuration	
dP range (URV)	8 bar (116 psi)
Min./ Max. temp. differential pressure transmitter (ambient/process)	Ambient temp.:0 to 45 °C (32 to 113 °F) Max. Process temp.:50 °C (122 °F)
Membrane material	AISI 316L
Reference accuracy (± 0.05%)	Standard
PMD75 - suitable measuring cell (upper range limit, URL)	16 bar (240 psi) with TD 2:1
Static pressure	35 bar (508 psi)
Output Signal	4 to 20 mA

Formula

Total performance	=	$\pm \sqrt{(E1)^2 + (E2)^2 + (E3)^2}$
E1	=	Reference accuracy → 🗎 27
E2	=	Ambient temperature effect per ±28 °C (50 °F) (corresponds to the range of −3 to +53 °C (+27 to +127 °F)) → 🗎 30
E3	=	Static pressure effect → 🗎 31

Calculation

Step 1: Calculating the turn down → 🗎 7		
Turn down (TD) = URL/ | URV - LRV |	=	16 bar (240 psi)/8 bar (116 psi)
	=	TD = 2:1
Step 2: Calculating the reference accuracy (E1) → 🗎 27		
For the measuring conditions,		
Reference accuracy, E1	=	± 0.05 (% of the set span)
	=	± (0.05/100) · 8 bar (116 psi)
	=	±0.0040 bar (0.0580 psi)
	E1 =	± 0.05 (% of the set span)
	(or)	±0.0040 bar (0.0580 psi)

Step 3: Calculation of the ambient temperature effect [$E2 = (E2_M \cdot CF_1 \cdot CF_2) + E2_E + E2_{LT}$] → 🗎 30

For the measuring conditions, Main temperature error, $E2_M$	=	± (0.012 · TD + 0.017) % of the set span
Temperature correction factor, CF_1	=	1
Membrane material correction factor, CF_2	=	1
Electronics error , $E2_E$	=	0.05 %
Low temperature error $E2_{LT}$	=	0 %
Ambient temperature effect, E2	=	± |(0.012 · TD + 0.017) · 1 · 1| +0.05
	=	± |(0.012 · 2 + 0.017) · 1 · 1| + 0.05
	=	± 0.091 (% of the set span)
	=	± (0.091/100) · 8 bar (116 psi)
	=	±0.0073 bar (0.10585 psi)
E2	=	± 0.091 (% of the set span)
	(or)	±0.0073 bar (0.10585 psi)

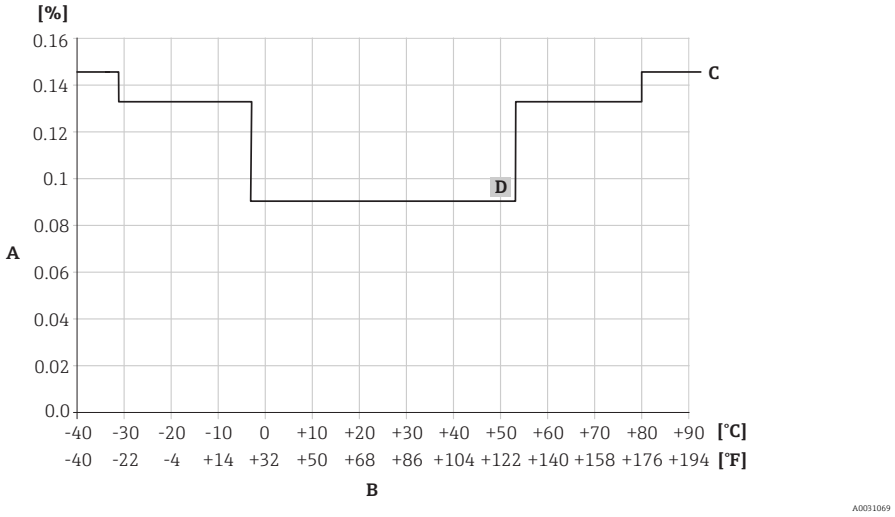

A Error (% of the set span)
B Temperature
C Measuring membrane made from 316L or Alloy C
D Ambient temperature effect: 0.091 (% of the set span) (E_2 at 50 °C (122 °F))

Step 4: Calculating the static pressure effect ($E3 = E3_M \cdot CF_3$) → 🗎 31

For the measuring conditions, Main static pressure error, $E3_M$	=	± (0.049 · TD) on the zero point and ± 0.02 on the span (% of the set span) per 70 bar (1015 psi)
	=	|± (0.049 · TD) on the zero point and ± 0.02 on the span| · (35/70) (% of the set span) per 35 bar (507.50 psi)
Error factor dependent on membrane material, CF_3	=	1
Static pressure effect, E3	=	± (0.049 · TD + 0.02) · (35/70) · CF_3 (% of the set span)
	=	± (0.049 · 2 + 0.02) · (0.5) · 1
	=	± 0.059 (% of the set span)
	=	± (0.059/100) · 8 bar (116 psi)
	=	±0.0047 bar (0.06815 psi)
E3	=	± 0.059 (% of the set span)
	(or)	±0.0047 bar (0.06815 psi)

Step 5: Calculation of total performance

Total performance	=	$\pm\sqrt{(E1)^2 + (E2)^2 + (E3)^2}$
		E1 = Reference accuracy E2 = Ambient temperature effect per ±28 °C (50 °F) (corresponds to the range of −3 to +53 °C (+27 to +127 °F)) E3 = Static Pressure Effect
Total performance, in mbar	=	$\pm\sqrt{(0.004)^2 + (0.0073)^2 + (0.0047)^2}$
	=	± 0.0095 bar (0.13775 psi) or 9.5 mbar (0.13775 psi)
	~	0.119 % of 8 bar (116 psi)
	(or)	
Total performance, in % of the set span	=	$\pm\sqrt{(0.05)^2 + (0.091)^2 + (0.059)^2}$
	=	± 0.119 (% of the set span)
Total performance	=	± 0.119 (% of the set span)
	(or)	±0.0095 bar (0.13775 psi)

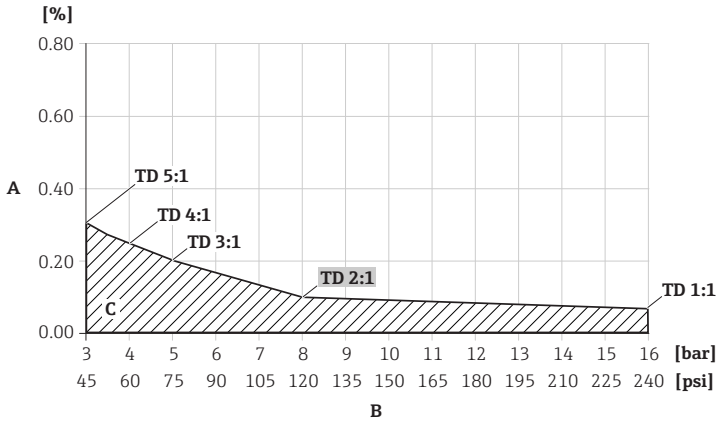

A Error (% of the set span)
B Set span [bar]
C Standard measuring cell

Installation factors

Some of the influencing factors are:
- Influence of installation position → 36
- Vibration effects → 36

Influence of installation position

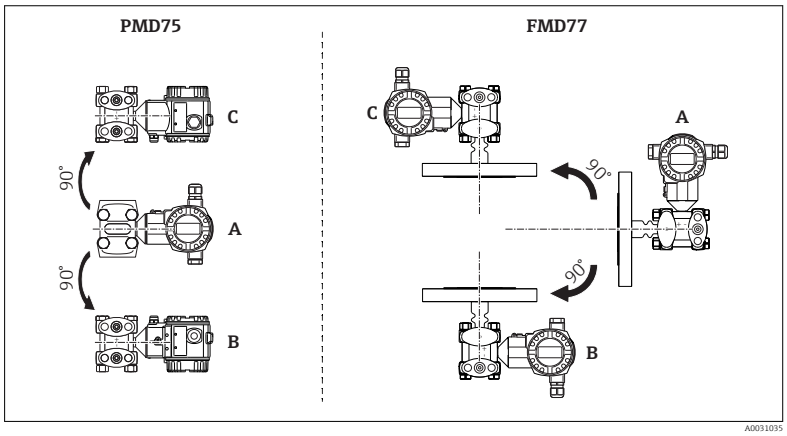

Device	Calibration position (A)	Device rotated vertically downwards (B)	Device rotated vertically upwards (C)
PMD75 and silicone oil	No additional error	<+4 mbar (+0.06 psi) The value is doubled for inert oil.	<−4 mbar (−0.06 psi) The value is doubled for inert oil.
FMD77 and silicone oil	No additional error	<+32 mbar (+0.46 psi) The value is doubled for inert oil.	<−32 mbar (−0.46 psi) The value is doubled for inert oil.

A position-dependent zero point shift can be corrected. Please refer to operating instructions chapter Commissioning → Position adjustment.

Vibration effects

Device/accessory	Measuring cells	Housing	Test standard	Vibration resistance
PMD75	10 mbar (0.15 psi), 30 mbar (0.45 psi)	T14 stainless steel T15 aluminum T17 aluminum	IEC 61298-3	≤ 0.15% URL to 10 to 38 Hz: ±0.35 mm (0.0138 in); 38 to 2000 Hz: 2 g in all 3 planes
		T14 aluminum	IEC 61298-3	≤ 0.15% URL to 10 to 60 Hz: ±0.21 mm (0.0083 in); 60 to 2000 Hz: 3 g in all 3 planes
	≥100 mbar (1.5 psi)	T14 stainless steel T15 aluminum	IEC 61298-3	≤ 0.075 % URL to 10 to 38 Hz: ±0.35 mm (0.0138 in); 38 to 2000 Hz: 2 g in all 3 planes
		T14 aluminum	IEC 61298-3	≤ 0.075 % URL to 10 to 60 Hz: ±0.35 mm (0.0138 in); 60 to 2000 Hz: 5 g in all 3 planes

Performance Characteristics Conformance

All performance characteristics are in conformance to ≥ ± 3 sigma.

Resolution

Current output: 1 µA

Warm-up period

- 4 to 20 mA HART: < 10 s
- PROFIBUS PA: 6 s
- FOUNDATION Fieldbus: 50 s

Reference operating conditions

- As per IEC 60770
- Ambient temperature T_A = constant, in the range +21 to +33 °C (+70 to +91 °F)
- Humidity φ = constant, in the range: 5 to 80 % RH ± 5 %
- Ambient pressure p_A = constant, in range: 860 to 1 060 mbar (12.47 to 15.37 psi)
- Position of measuring cell: horizontal ±1° (see also "Influence of installation position" section→ 🗎 36)
- Input of LOW SENSOR TRIM and HIGH SENSOR TRIM for lower range value and upper range value
- Zero based span
- Membrane material for PMD75: AISI 316L (1.4435), Alloy C276, gold/rhodium-coated, Monel
- Membrane material for FMD77, FMD78: AISI 316L (1.4435)
- Filling oil: silicone oil
- Supply voltage: 24 V DC ±3 V DC
- Load with HART: 250 Ω
- Turn down (TD) = URL/ | URV - LRV |

Installation

General installation instructions

- A position-dependent zero point shift can be corrected directly at the device via operating keys, and also in hazardous areas in the case of devices with external operation.
  Diaphragm seals also shift the zero point, depending on the installation position → 🗎 98.
- The device housing can be rotated up to 380° .
- Endress+Hauser offers a mounting bracket for installing the device on pipes or walls → 🗎 39.
- Use flushing rings for flange and cell diaphragm seals if buildup or clogging can be expected at the diaphragm seal connection. The flushing ring can be fitted between the process connection and diaphragm seal. Material buildup in front of the process isolating diaphragm can be flushed away, and the pressure chamber vented, via the two lateral flushing holes.
- When measuring in media containing solids, such as dirty liquids, installing separators and drain valves is useful for capturing and removing sediment.
- Using a valve manifold allows for easy commissioning, installation and maintenance without interrupting the process.
- General recommendations for the pressure piping can be found in DIN 19210 "Methods for measurement of fluid flow; differential piping for flow measurement devices" or the corresponding national or international standards.
- Install the pressure piping with a continuous gradient of at least 10%.
- When routing the pressure piping outdoors, ensure sufficient anti-freeze protection, e.g. by using pipe heat tracing.
- Point the cable and connector downwards where possible to prevent moisture from entering (e.g. rain or condensation water).

Measuring arrangement

Flow measurement

- The PMD75 is best suited to flow measurement.
- Measuring arrangement for gases: Mount device above the measuring point.
- Measuring arrangement for liquids and vapors: Mount device below the measuring point.
- For flow measurement in vapors, mount the condensate traps at the same level as the tapping point and at the same distance from the Deltabar S.

Level measurement

The PMD75 and FMD77 are best suited to level measurement in open containers. All Deltabar S devices are suitable for level measurement in closed vessels.

Measuring arrangement for level measurement in open containers
- PMD75: Mount device below the lower measuring connection. The negative side is open to atmospheric pressure.
- FMD77: Mount device directly on the vessel. The negative side is open to atmospheric pressure.

Measuring arrangement for level measurement in closed containers and closed containers with superimposed vapor
- PMD75: Mount device below the lower measuring connection. Always connect the negative side above the maximum level via pressure piping.
- FMD77: Mount device directly on the vessel. Always connect the negative side above the maximum level via pressure piping.
- In the case of level measurement in closed vessels with superimposed vapor, a condensate trap ensures the pressure remains constant on the minus side.

Pressure measurement

- The PMD75 and FMD78 are best suited to differential pressure measurement.
- Measuring arrangement for gases: Mount device above the measuring point.
- Measuring arrangement for liquids and vapors: Mount device below the measuring point.
- For differential pressure measurement in vapors, mount the condensate traps at the same level as the tapping point and at the same distance from the Deltabar S.

Measuring arrangement for devices with diaphragm seals – FMD77 and FMD78

→ 🗎 94

Orientation

The orientation may cause a zero point shift, see → 🗎 36.

This position-dependent zero point shift can be corrected directly at the device via the operating key, and also in hazardous areas in the case of devices with external operation (position adjustment).

Wall and pipe mounting, transmitter (optional)

Endress+Hauser offers the following mounting bracket for installing the device on pipes or walls:

Standard version	Heavy-duty version
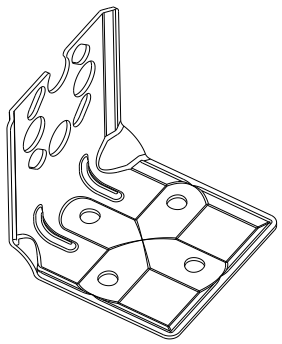 A0031326	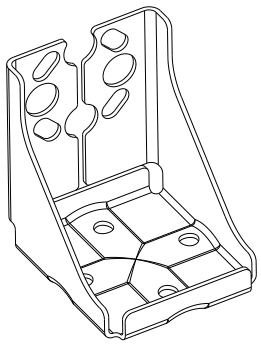 A0031327

- The standard mounting bracket version is **not** suitable for use in an application subject to vibrations.
- The vibration resistance of the heavy-duty mounting bracket has been tested according to IEC 61298-3, see the "Vibration resistance" section → 📄 44.
- If a valve manifold is used, its dimensions should also be taken into consideration.
- Bracket for wall and pipe mounting including retaining bracket for pipe mounting and two nuts.
- The material of the screws used to secure the device depend on the order code.
- For the technical data (such as the dimensions or order numbers for screws), see the document SD01553P/00/EN.

Ordering information:
- Standard version: Product Configurator, order code for "Additional options" option "Q" or
- Standard version: Product Configurator, order code for "Accessories enclosed" option "PD"
- Heavy-duty version: Product Configurator, order code for "Additional options" option "U" or
- Heavy-duty version: Product Configurator, order code for "Accessories enclosed" option "PB"

Wall and pipe mounting, valve manifold (optional)

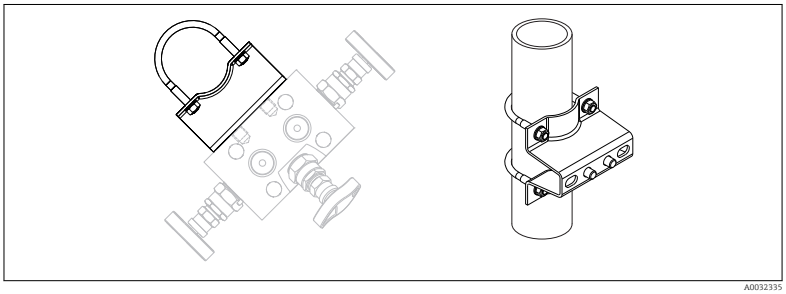

A0032335

For the technical data (such as the dimensions or order numbers for screws), see the document SD01553P/00/EN.

Ordering information:

Product Configurator, order code for "Accessories enclosed", option "PJ"

"Separate housing" version

With the "separate housing" version, you are able to mount the housing with the electronics insert at a distance from the measuring point. This version facilitates trouble-free measurement
- Under particularly difficult measuring conditions (at installation locations that are cramped or difficult to access)
- If rapid cleaning of the measuring point is required and
- If the measuring point is exposed to vibrations.

You can choose between different cable versions:
- PE: 2 m (6.6 ft), 5 m (16 ft) and 10 m (33 ft)
- FEP: 5 m (16 ft).

Ordering information: Product Configurator, order code for "Additional options 2", version "G".

Dimensions → 🗎 78

In the case of the "separate housing" version, the sensor is delivered with the process connection and cable ready mounted. The housing and a mounting bracket are enclosed as separate units. The cable is provided with a socket at both ends. These sockets are simply connected to the housing and the sensor.

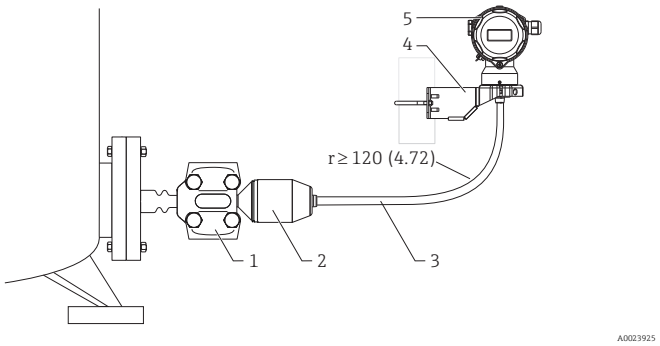

1 Process connection with sensor - For degrees of protection, see the following section
2 Process connection adapter (weight: 0.93 kg (2.05 lb))
3 Cable (weight: 0.05 kg/meter (0.11 lb)), both ends are fitted with a socket
4 Mounting bracket provided, suitable for pipe and wall mounting
5 Housing with electronic insert - degrees of protection → 🗎 49

Engineering unit mm (in)

Degree of protection for the process connection and sensor with the use of
- FEP cable:
  - IP 69 [2)]
  - IP 66 NEMA 4/6P
  - IP 68 (1.83 mH_2O for 24 h) NEMA 4/6P
- PE cable:
  - IP 66 NEMA 4/6P
  - IP 68 (1.83 mH_2O for 24 h) NEMA 4/6P

Technical data of the PE and FEP cable:
- Minimum bending radius: 120 mm (4.72 in)
- Cable extraction force: max. 450 N (101.16 lbf)
- Resistance to UV light

Use in hazardous area:
- Intrinsically safe installations (Ex ia/IS)
- FM/CSA IS: for Div. 1 installation only

2) Designation of the IP protection class according to DIN EN 60529. Previous designation "IP69K" according to DIN 40050 Part 9 is no longer valid (standard withdrawn on November 1, 2012). The tests required by both standards are identical.

Reduction of the installation height

If the separate housing is used, the installation height of the process connection is reduced compared to the dimensions of the standard version.

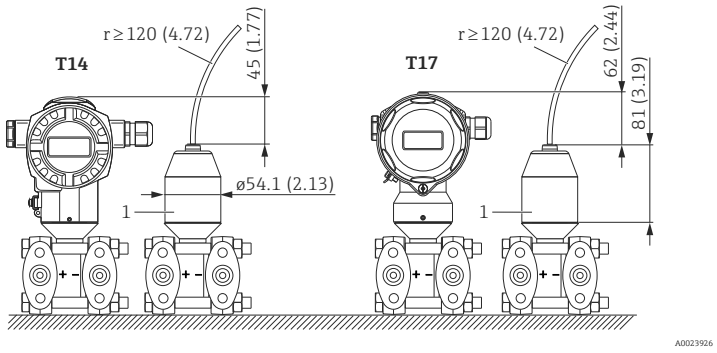

1 Process connection adapter

Engineering unit mm (in)

Turning the housing

The housing can be rotated up to 380° by loosening the Allen screw.

Your benefits

- Easy mounting due to optimum alignment of housing
- Good, accessible device operation
- Optimum readability of the onsite display (optional).

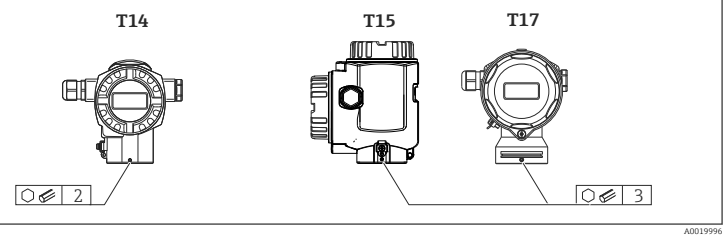

Oxygen applications

Oxygen and other gases can react explosively to oils, grease and plastics, such that, among other things, the following precautions must be taken:
- All components of the system, such as measuring devices, must be cleaned in accordance with the BAM (DIN 19247) requirements.
- Dependent on the materials used, a certain maximum temperature and a maximum pressure for oxygen applications must not be exceeded.

The devices suitable for gaseous oxygen applications are listed in the following table with the specification p_{max}.

HB = Cleaned for oxygen service

Order code for devices [1], cleaned for oxygen applications	p_{max} for oxygen applications	T_{max} for oxygen applications
PMD75 – * * * * * * * * K * * or PMD75 – * * * * * * * * H * * HB	160 bar (2 400 psi)	85 °C (185 °F)
PMD75 – * * * * * * * * 2 * * or PMD75 – * * * * * * * * A * * HB	160 bar (2 400 psi)	60 °C (140 °F)
PMD75 – * * * * * * * * 3 * * or PMD75 – * * * * * * * * C * * HB	160 bar (2 400 psi)	60 °C (140 °F)
FMD77 – * * * * * T * F * * or FMD77 – * * * * * D * F * * HB	PN of the flange	60 °C (140 °F)
FMD78 – * * * * * * * * 4 * * or FMD78 – * * * * * * * * 6 * * HB FMD78 – * * * * * * * * D * * or FMD78 – * * * * * * * * F * * HB	Depends on filling oil: max. 160 bar (2 400 psi)	85 °C (185 °F)

1) Devices only, not accessories or enclosed accessories.

Ultrapure gas applications

Endress+Hauser also offers devices for special applications, such as ultrapure gas, cleaned from oil and grease. No special restrictions regarding the process conditions apply to these devices.

Ordering information:
- PMD75: Product Configurator, order code for "Seal"
- FMD77: Product Configurator, order code for "Process connection low-pressure side; Material; Seal".

Applications with hydrogen

A **gold-plated** metal process isolating diaphragm offers universal protection against hydrogen diffusion, both in gas applications and in applications with aqueous solutions.

Applications with hydrogen in aqueous solutions

A **gold/rhodium-plated** metal process isolating diaphragm (AU/Rh) offers effective protection against hydrogen diffusion.

Environment

Ambient temperature range

Version	PMD75	FMD77	FMD78
Without LCD display	−50 to +85 °C (−58 to +185 °F) [1]		
With LCD display [2]	−20 to +70 °C (−4 to +158 °F)		
With separate housing	-	−20 to +60 °C (−4 to +140 °F)	
Diaphragm seal systems [3]	-	→ 🗎 94	

1) If the temperature is below −40 °C (−40 °F), chances of failure increases. Product Configurator, order code for "Test, certificate" option "JN".
2) Extended temperature application range (−50 to +85 °C (−58 to +185 °F)) with restrictions in optical properties, such as display speed and contrast
3) Ambient temperature range and process temperature range are mutually dependent - see "Heat insulation" section

Hazardous areas

- For devices for use in hazardous areas, see Safety Instructions, Installation or Control Drawing→ 🗎 113.
- Pressure measuring devices that have the usual explosion protection certificates (e.g. ATEX-/ CSA-/ FM-/ IEC Ex,...) can be used in hazardous areas at ambient temperatures down to −50 °C (−58 °F). The functionality of the explosion protection is also guaranteed for ambient temperatures down to −50 °C (−58 °F).

Storage temperature range

- −40 to +90 °C (−40 to +194 °F)
- Local display: −40 to +85 °C (−40 to +185 °F)
- Separate housing:−40 to +60 °C (−40 to +140 °F)
- Devices with PVC-sheathed capillary: −25 to +90 °C (−13 to +194 °F)

Degree of protection

Depends on the deployed
- Housing → 🗎 49
- Separate housing → 🗎 40

Climate class

Class 4K4H (air temperature: −20 to +55 °C (−4 to +131 °F), relative humidity: 4 to 100 %) fulfilled as per DIN EN 60721-3-4 (condensation possible.)

Electromagnetic compatibility

- Electromagnetic compatibility as per EN 61326 and NAMUR recommendation EMC (NE21).
- With enhanced immunity against electromagnetic fields as per EN 61000-4-3: 30 V/m with closed cover (for devices with T14 housing or T15 housing)
- Maximum deviation: < 0.5 % of span
- All EMC measurements were performed with a turn down (TD) = 2:1.

For further details refer to the Declaration of Conformity.

Vibration resistance

Device/accessory	Measuring cells	Housing	Test standard	Vibration resistance
PMD75	10 mbar (0.15 psi), 30 mbar (0.45 psi)	T14 stainless steel T15 aluminum T17 aluminum	IEC 61298-3	Guaranteed for 10 to 38 Hz: ±0.35 mm (0.0138 in); 38 to 2000 Hz: 2 g in all 3 planes
		T14 aluminum	IEC 61298-3	Guaranteed for 10 to 60 Hz: ±0.21 mm (0.0083 in); 60 to 2000 Hz: 3 g in all 3 planes
	≥100 mbar (1.5 psi)	T14 stainless steel T15 aluminum	IEC 61298-3	Guaranteed for 10 to 38 Hz: ±0.35 mm (0.0138 in); 38 to 2000 Hz: 2 g in all 3 planes
		T14 aluminum	IEC 61298-3	Guaranteed for 10 to 60 Hz: ±0.35 mm (0.0138 in); 60 to 2000 Hz: 5 g in all 3 planes
With mounting bracket (heavy duty design)	All	All	IEC 61298-3	Guaranteed for 10 to 60 Hz: ±0.15 mm (0.0059 in); 60 to 500 Hz: 2 g in all 3 planes
FMD77	All	All	IEC 61298-3:1998	Guaranteed for 10 to 60 Hz: ±0.075 mm (0.0030 in); 60 to 150 Hz: 1 g in all 3 planes

Process

Process temperature limits (temperature at transmitter)

PMD75

- Process connections made of 316L or Alloy C276: −50 to +85 °C (−58 to +185 °F) [3)]
- Process connections made of C22.8: −10 to +85 °C (+14 to +185 °F)
- For oxygen applications, note → 🗎 42"Oxygen applications" section.
- Pay attention to the process temperature range of the seal. See also the following section "Process temperature range, seals".

FMD77

- Depends on the design (see the following table)
- Dependent on diaphragm seal and filling oil (→ 🗎 97): −70 to +400 °C (−94 to +752 °F)
- For oxygen applications, note → 🗎 42"Oxygen applications" section.
- Pay attention to the process temperature range of the seal. See also the following section "Process temperature range, seals".
- Please observe the temperature application limits of the diaphragm seal oil. → 🗎 97, "Diaphragm seal filling oils" section.
- Please observe the maximum gauge pressure and maximum temperature.

Design	Temperature isolator	Temperature	Option [1)]
Transmitter horizontal	long	400 °C (752 °F)	MA
Transmitter vertical	long	300 °C (572 °F)	MB
Transmitter horizontal	short	200 °C (392 °F)	MC
Transmitter vertical	short	200 °C (392 °F)	MD
U-bracket, Transmitter horizontal (for devices which require a CRN approval)	-	400 °C (752 °F)	[2)]

1) Product Configurator, "Process connection" ordering feature
2) In combination with CSA approval.

FMD78

- Dependent on diaphragm seal and filling oil:−70 to +400 °C (−94 to +752 °F)
- For oxygen applications, note → 🗎 42"Oxygen applications" section.
- Please observe the temperature application limits of the diaphragm seal oil. → 🗎 97, "Diaphragm seal filling oils" section.
- Please observe the maximum gauge pressure and maximum temperature.

FMD77 and FMD78: Devices with PTFE-coated process isolating diaphragm

The non-stick coating has excellent gliding properties and is used to protect the process isolating diaphragm against abrasive media.

NOTICE

Incorrect use of the PTFE foil will destroy the device!

▶ The PTFE foil is designed to protect the unit against abrasion. It does not provide protection against corrosive media.

For the range of application of the 0.25 mm (0.01 in) PTFE foil on an AISI 316L (1.4404/1.4435) process isolating diaphragm, see the following diagram:

3) If the temperature is below −40 °C (−40 °F), increased failure rates are likely. Product Configurator, order code for "Test, certificate" option "JN".

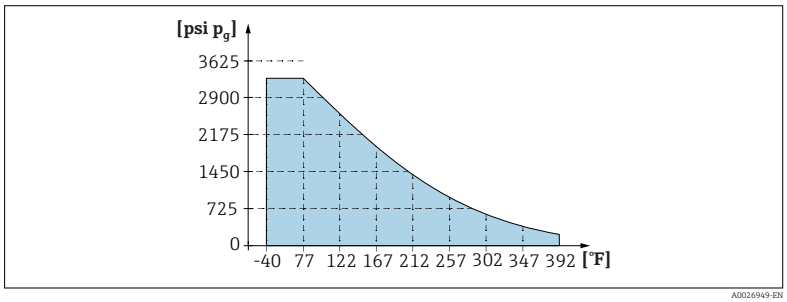

For vacuum applications: $p_{abs} \leq 1$ bar (14.5 psi)to 0.05 bar (0.725 psi)up to max. +150 °C (302 °F).

Process temperature limits of capillary armoring: FMD77 and FMD78

- 316L: No restrictions
- PTFE: No restrictions
- PVC: See the following diagram

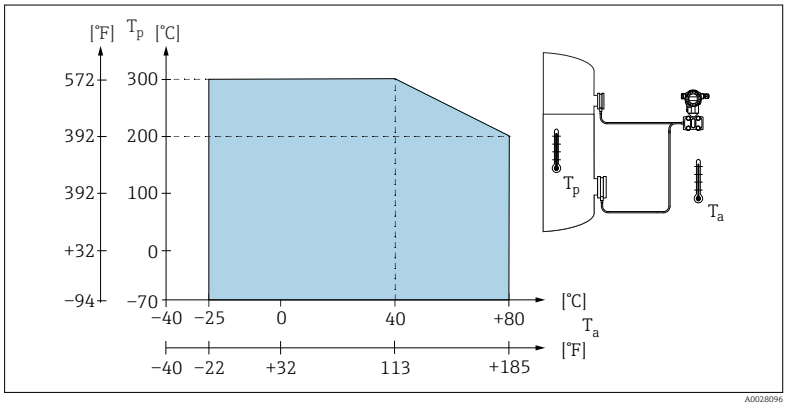

Process temperature range, seals

PMD75

Seal	Process temperature range [1]	Option [2]
FKM Viton	−20 to +85 °C (−4 to +185 °F)	A
PTFE	−50 to +85 °C (−58 to +185 °F)	C
NBR	−20 to +85 °C (−4 to +185 °F)	F
Copper	−40 to +85 °C (−40 to +185 °F)	H
Copper, cleaned for oxygen service	−20 to +85 °C (−4 to +185 °F)	K or H [3]
FKM Viton, cleaned from oil and grease	−10 to +85 °C (+14 to +185 °F)	1
FKM Viton, cleaned for oxygen service	−10 to +60 °C (+14 to +140 °F)	2 or A [3]
PTFE, cleaned for oxygen applications	−20 to +60 °C (−4 to +140 °F)	3 or C [3]
EPDM [4]	−40 to +85 °C (−40 to +185 °F)	J

1) lower temperatures on request
2) Product Configurator, "Seal" ordering feature
3) with option "HB", see Product Configurator, order code for "Service"
4) Always for LP side with blind flange (see Product Configurator, order code for "Process connection").

FMD77 (with diaphragm seal)

Seal on the LP side (–)	Process temperature range [1]	OPL bar (psi)	PN bar (psi)	Option [2]
FKM Viton	–20 to +85 °C (–4 to +185 °F)	See the "Measuring range" section "FMD77, FMD78, PMD75: Option PN 160 / 16 MPa / 2400 psi" → 🗎 12.		B, D, F, U
PTFE	–50 to +85 °C (–58 to +185 °F)			H, J
EPDM	–40 to +85 °C (–40 to +185 °F)			K, L
FKM Viton, cleaned from oil and grease	–10 to +85 °C (+14 to +185 °F)			S
FKM Viton, cleaned for oxygen service	–10 to +60 °C (+14 to +140 °F)			T or D [3]
Kalrez, Compound 6375	0 to +5 °C (+32 to +41 °F)	44...49 (660...735)	29...33 (435...495)	M, N
	+5 to +10 °C (+41 to +50 °F)	49...160 (735...2400)	33...107 (495...1605)	
	+10 to +85 °C (+50 to +185 °F)	160 (2400)	107 (1605)	
Chemraz, Compound 505	–10 to +25 °C (+14 to +77 °F)	130...160 (1950...2400)	87...107 (1305...1605)	P, Q
	+25 to +85 °C (+77 to +185 °F)	160 (2400)	107 (1605)	
Diaphragm seal and capillary, welded	Please observe the temperature application limits of the diaphragm seal oil. → 🗎 97, "Diaphragm seal filling oils" section.			

1) lower temperatures on request
2) Product Configurator, order code for "Process connection, LP side; seal:"
3) with option "HB", see Product Configurator, order code for "Service"

Pressure specifications

WARNING

The maximum pressure for the measuring device depends on the lowest-rated element with regard to pressure.

- For pressure specifications, see the "Measuring range" section and the "Mechanical construction" section.
- The measuring device must be operated only within the specified limits!
- MWP (maximum working pressure): The MWP (maximum working pressure) is specified on the nameplate. This value refers to a reference temperature of +20 °C (+68°F) and may be applied to the device for an unlimited time. Observe temperature dependency of the MWP. The pressure values permitted at higher temperatures can be found in the standards EN 1092-1: 2001 Tab. 18 (With regard to their stability-temperature property, the materials 1.4435 and 1.4404 are grouped together under 13EO in EN 1092-1 Tab. 18. The chemical composition of the two materials can be identical.), ASME B 16.5a – 1998 Tab. 2-2.2 F316, ASME B 16.5a – 1998 Tab. 2.3.8 N10276, JIS B 2220.
- The test pressure corresponds to the over pressure limit of the individual sensors (OPL = 1.5 x MWP) and may be applied only for a limited period of time to prevent any lasting damage.
- The Pressure Equipment Directive (2014/68/EU) uses the abbreviation "PS". The abbreviation "PS" corresponds to the MWP (maximum working pressure) of the measuring device.
- In the case of sensor range and process connections where the over pressure limit (OPL) of the process connection is smaller than the nominal value of the sensor, the device is set at the factory, at the very maximum, to the OPL value of the process connection. If you want to use the entire sensor range, select a process connection with a higher OPL value (1.5 x PN; MWP = PN)
- In oxygen applications, the values for "p_{max} and T_{max} for oxygen applications must not be exceeded→ 🗎 42.
- For the PMD75, the MWP applies to the temperature ranges specified in the "Ambient temperature range" → 🗎 43 and "Process temperature limits" → 🗎 45 sections.

Mechanical construction

Device height

The device height is calculated from
- the height of the housing
- the height of optional mounted parts such as temperature isolators or capillaries
- the height of the relevant process connection.

The individual heights of the components can be found in the following sections. To calculate the device height, simply add up the individual heights of the components. If necessary, the installation space (the space used to install the device) must also be taken into account. You can use the following table for this:

PMD75

Designation	Position	Dimension	Example
Side flanges	(A)	85 mm (3.35 in)	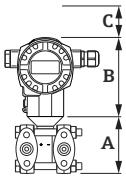
Height of housing	(B)	→ 49 ff.	
Installation space	(C)	-	
Device height			

FMD77

Designation	Position	Dimension	Example
Mounted parts	(A)	→ 57	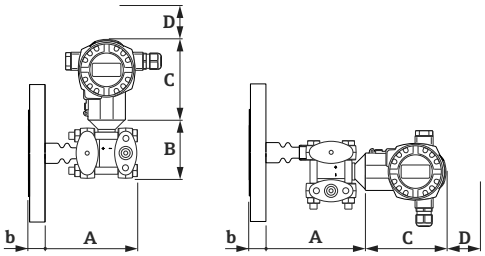
Side flanges	(B)	85 mm (3.35 in)	
Height of housing	(C)	→ 49 ff.	
Installation space	(D)	-	
Process connections	(b)	→ 51	
Device height			

FMD78

Designation	Position	Dimension	Example
Side flanges	(A)	85 mm (3.35 in)	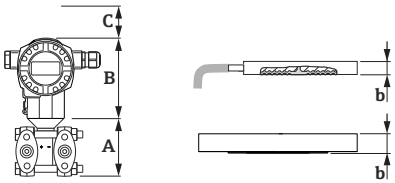
Height of housing	(B)	→ 49 ff.	
Installation space	(C)	-	
Process connections	(b)	→ 51	
Device height			

T14 housing, optional display on the side

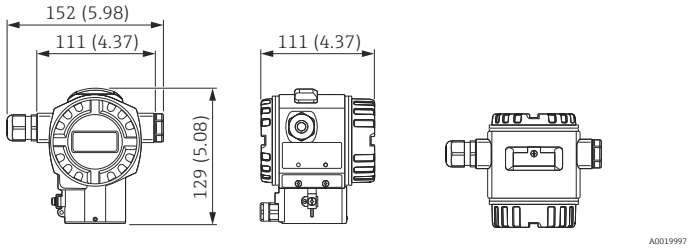

Engineering unit mm (in). Front view, left-hand side view, top view

Material		Degree of protection	Cable entry	Weight in kg (lb)		Option [1]
Housing	Cover seal			with display	without display	
Aluminum	EPDM	IP66/67 NEMA 6P	M20 gland	1.2 (2.65)	1.1 (2.43)	A
		IP66/67 NEMA 6P	G ½" thread			B
		IP66/67 NEMA 6P	NPT ½" thread			C
		IP66/67 NEMA 6P	M12 plug			D
		IP66/67 NEMA 6P	7/8" plug			E
		IP65 NEMA 4	HAN7D plug 90 degrees			F
316L	EPDM	IP66/67 NEMA 6P	M20 gland	2.1 (4.63)	2.0 (4.41)	1
		IP66/67 NEMA 6P	G ½" thread			2
		IP66/67 NEMA 6P	NPT ½" thread			3
		IP66/67 NEMA 6P	M12 plug			4
		IP66/67 NEMA 6P	7/8" plug			5
		IP65 NEMA 4	HAN7D plug 90 degrees			6
	FVMQ	IP66/67 NEMA 6P	M20 gland			7
	FVMQ	IP66/67 NEMA 6P	NPT ½" thread			8

1) Product Configurator, order code for "Housing, cover seal, cable entry, degree of protection"

T15 housing, optional display on the top

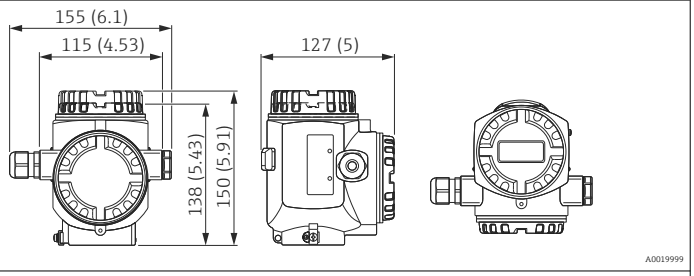

Engineering unit mm (in). Front view, left-hand side view, top view

Material		Degree of protection	Cable entry	Weight in kg (lb)		Option [1]
Housing	Cover seal			with display	without display	
Aluminum	EPDM	IP66/67 NEMA 6P	M20 gland	1.8 (3.97)	1.7 (3.75)	J
		IP66/67 NEMA 6P	G ½" thread			K
		IP66/67 NEMA 6P	NPT ½" thread			L
		IP66/67 NEMA 6P	M12 plug			M
		IP66/67 NEMA 6P	7/8" plug			N
		IP65 NEMA 4	HAN7D plug 90 degrees			P

1) Product Configurator, order code for "Housing, cover seal, cable entry, degree of protection"

T17 housing (hygienic), optional display on the side

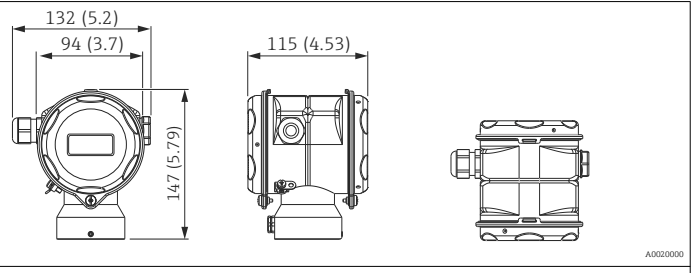

Engineering unit mm (in). Front view, left-hand side view, top view

Material		Degree of protection [1]	Cable entry	Weight in kg (lb)		Option [2]
Housing	Cover seal			with display	without display	
316L	EPDM	IP66/68 NEMA 6P	M20 gland	1.2 (2.65)	1.1 (2.43)	R
		IP66/68 NEMA 6P	G ½" thread			S
		IP66/68 NEMA 6P	NPT ½" thread			T
		IP66/68 NEMA 6P	M12 plug			U
		IP66/68 NEMA 6P	7/8" plug			V

1) Degree of protection IP 68: 1.83 mH_2O for 24 h
2) Product Configurator, order code for "Housing, cover seal, cable entry, degree of protection"

Process connections PMD75 **Oval flange, connection 1/4-18 NPT or RC 1/4**

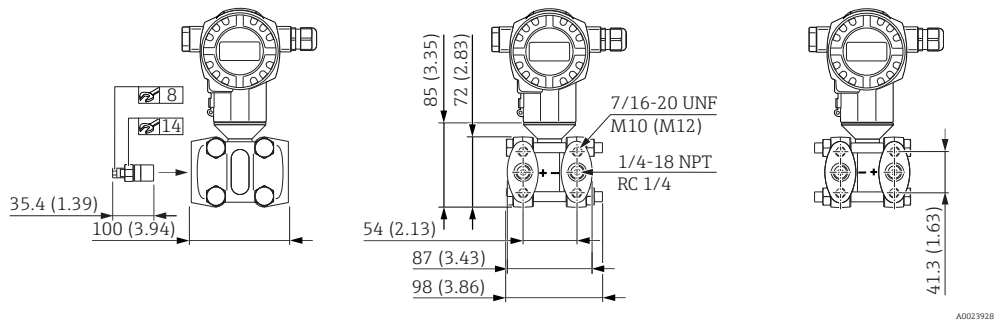

Engineering unit mm (in). Front view, left-hand side view, right-hand side view. Nuts are always located on the minus side.

Connection	Mounting	Material	Accessories	Weight [1] kg (lbs)	Option [2]
1/4-18 NPT IEC 61518	7/16-20 UNF	Steel C 22.8 (1.0460/Zn5) [3]	incl. 2 vent valves AISI 316L (1.4404)	4.2 (9.26)	B
1/4-18 NPT IEC 61518	7/16-20 UNF	1.4408 / CF3M [4] / AISI 316L			D
		AISI 316L (1.4404) [5]			
1/4-18 NPT IEC 61518	7/16-20 UNF	Alloy C276 (2.4819)	Vent valves Alloy C276 (2.4819) [6]	4.5 (9.92)	F
RC 1/4	7/16-20 UNF	1.4408 / CF3M [4] / AISI 316L	incl. 2 vent valves AISI 316L (1.4404)	4.2 (9.26)	U
		AISI 316L (1.4404) [5]			
1/4-18 NPT IEC 61518	▪ PN 160: M10 ▪ PN 420: M12	Steel C 22.8 (1.0460/Zn5) [3]			1
1/4-18 NPT IEC 61518	▪ PN 160: M10 ▪ PN 420: M12	AISI 316L (1.4404)			2
1/4-18 NPT IEC 61518	▪ PN 160: M10 ▪ PN 420: M12	Alloy C276 (2.4819)	Vent valves Alloy C276 (2.4819) [6]	4.5 (9.92)	3
HP: 1/4-18 NPT IEC 61518 LP: blind flange	7/16-20 UNF	AISI 316L (1.4404)	incl. vent valve AISI 316L (1.4404)	4.2 (9.26)	Q
HP: 1/4-18 NPT IEC 61518 LP: blind flange	7/16-20 UNF	Alloy C276 (2.4819)	without vent valve [6].	4.5 (9.92)	S

1) Weight of process connections without vent valves with 10 mbar (0.15 psi)or 30 mbar (0.45 psi)measuring cell, process connections without vent valves with measuring cells ≥ 100 mbar (1.5 psi) weigh approx. 800 g (28.22 oz) less.
2) Product Configurator, order code for "Process connection"
3) The C22.8 side flanges are coated with anti-corrosion protection (zinc, chrome). To prevent the formation of hydrogen and thereby diffusion through the membrane, Endress+Hauser recommends the use of 316L side flanges for applications involving water. Hydrogen diffusion through the diaphragm leads to measurement errors, or in extreme cases to a device failure.
4) Cast equivalent to material AISI 316L
5) For devices with CSA approval: Product Configurator, order code for "Approval", options D, E, F, U, V, W and X
6) Product Configurator, order code for "Additional options 2"

Process connections PMD75 **Oval flange, connection 1/4-18 NPT or RC 1/4, with side vent**

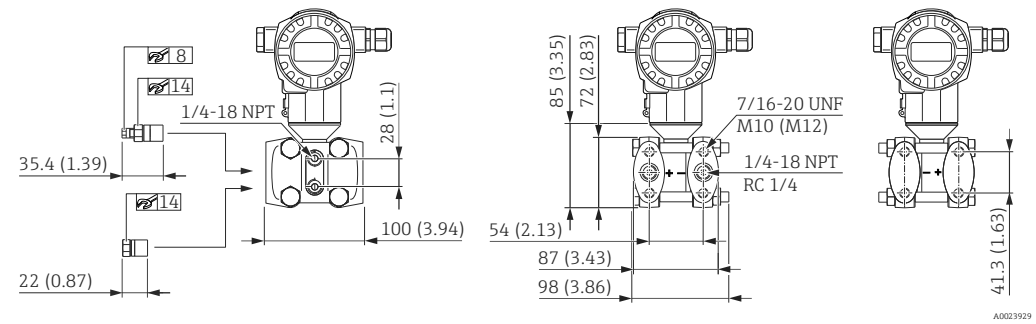

Engineering unit mm (in). Front view, left-hand side view, right-hand side view. Nuts are always located on the minus side.

Connection	Mounting	Material	Accessories	Weight [1] kg (lbs)	Option [2]
1/4-18 NPT IEC 61518	7/16-20 UNF	Steel C 22.8 (1.0460/Zn5) [3]	4 locking screws and 2 vent valves AISI 316L (1.4404)	4.2 (9.26)	C
1/4-18 NPT IEC 61518	7/16-20 UNF	1.4408 / CF3M [4] / AISI 316L			E
		AISI 316L (1.4404) [5]			
1/4-18 NPT IEC 61518	7/16-20 UNF	Alloy C276 (2.4819)	Vent valves Alloy C276 (2.4819) [6]	4.5 (9.92)	H
RC 1/4	7/16-20 UNF	1.4408 / CF3M [4] / AISI 316L	4 locking screws and 2 vent valves AISI 316L (1.4404)	4.2 (9.26)	V
		AISI 316L (1.4404) [5]			
HP: 1/4-18 NPT IEC 61518 LP: blind flange	7/16-20 UNF	AISI 316L (1.4404)	incl. locking screws and vent valve AISI 316L (1.4404)	4.2 (9.26)	R
HP: 1/4-18 NPT IEC 61518 LP: blind flange	7/16-20 UNF	Alloy C276 (2.4819)	Vent valve Alloy C276 (2.4819) [6]	4.5 (9.92)	T

1) Weight of process connections without vent valves with 10 mbar (0.15 psi)or 30 mbar (0.45 psi)measuring cell, process connections without vent valves with measuring cells ≥ 100 mbar (1.5 psi) weigh approx. 800 g (28.22 oz) less.
2) Product Configurator, order code for "Process connection"
3) The C22.8 side flanges are coated with anti-corrosion protection (zinc, chrome). To prevent the formation of hydrogen and thereby diffusion through the membrane, Endress+Hauser recommends the use of 316L side flanges for applications involving water. Hydrogen diffusion through the diaphragm leads to measurement errors, or in extreme cases to a device failure.
4) Cast equivalent to material AISI 316L
5) For devices with CSA approval: Product Configurator, order code for "Approval", options D, E, F, U, V, W and X
6) Product Configurator, order code for "Additional options 2"

Process connections PMD75 **Oval flange, prepared for diaphragm seal mount**

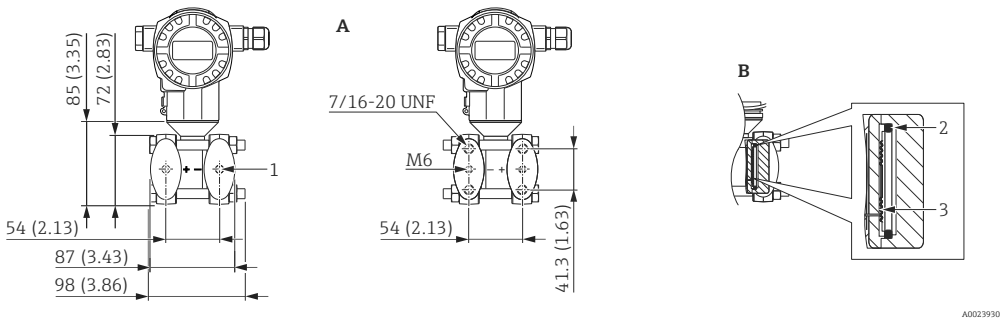

A Prepared for diaphragm seal mount
B Position of copper seal
1 Diaphragm seal mount
2 Copper ring seal
3 Process isolating diaphragm

Engineering unit mm (in). Left-hand side view, right-hand side view. Nuts are always located on the minus side.

Material	Option [1]
1.4408 / CF3M [2] / AISI 316L	W
AISI 316L (1.4404) [3]	

1) Product Configurator, order code for "Process connection"
2) Cast equivalent to material AISI 316L
3) For devices with CSA approval: Product Configurator, order code for "Approval", options D, E, F, U, V, W and X

Valve manifold DA63M- (optional)

Endress+Hauser supplies milled valve manifolds via the transmitter's product structure in the following versions:

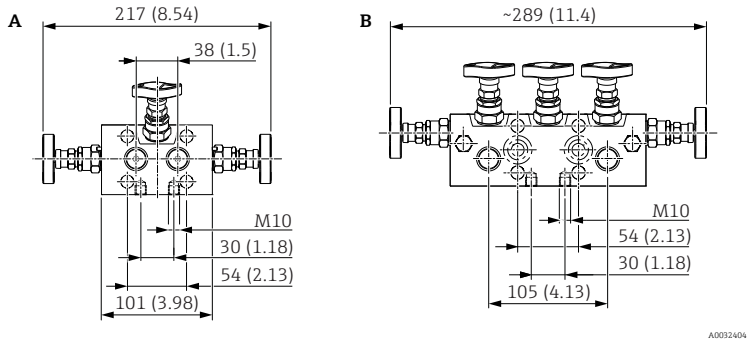

A 3-way valve manifold
B 5-way valve manifold

Engineering unit mm (in)

3-way or 5-way valve manifolds in 316L or AlloyC can be
- ordered as an **enclosed** accessory (screws and seals for mounting are enclosed)
- ordered as a **mounted** accessory (mounted valve manifolds are supplied with a documented leakage test).

Certificates ordered with the equipment (e.g. 3.1 material certificate and NACE) and tests (e.g. PMI and pressure test) apply to the transmitter and the valve manifold.

For other details (order option, dimension, weight, materials), see SD01553P/00/EN "Mechanical accessories for pressure measuring devices".

During the operating life of the valves, it may be necessary to re-tighten the packing.

Mounting on valve manifold

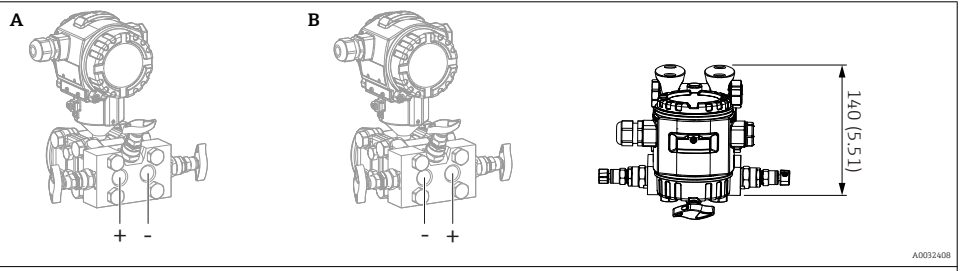

Engineering unit mm (in)

Position	Designation	Option [1]
A	Mounting from above on valve manifold	NV
B	Mounting from below on valve manifold	NW

1) Product Configurator, order code for "Accessories mounted"

FMD77: Selecting the process connection and capillary line

The device can be fitted with different process connections on the high-pressure side (HP) and on the low-pressure side (LP).

The FMD77 can also be fitted with capillary lines on the low-pressure side (LP).

When using diaphragm seal systems with a capillary, sufficient strain relief must be provided to prevent the capillary from bending (capillary bending radius ≥ 100 mm (3.94 in)).

Example:
- Process connection on high-pressure side = DN80 flange
- Process connection on low-pressure side = DN50 flange

Your benefits:
- Thanks to the variety of order options, the devices can be optimally adapted to the given installation situation
- Reduced costs due to optimum system design
- Easier installation due to adjusted length of capillary line
- Easier adaptation to existing installation situations

Ordering information:
- Process connections are indicated in the relevant section by HP (high-pressure side) and LP (low-pressure side)
- Order details for capillary lengths → 🗎 86

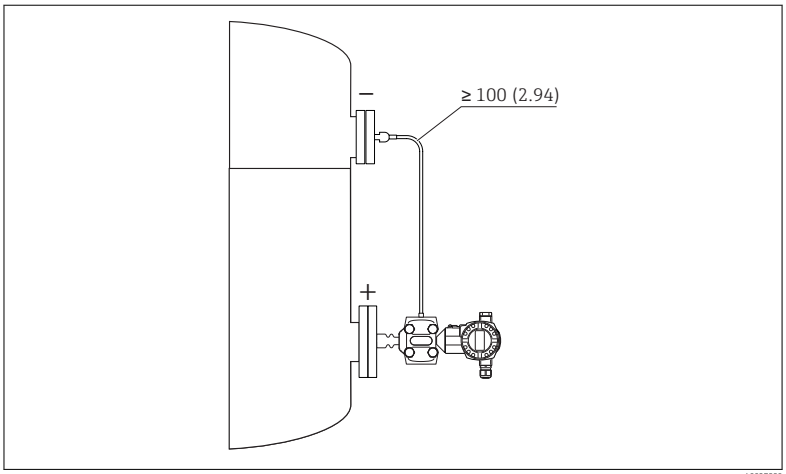

Due to the use of different process connections and capillary lines, it is essential that the device be designed/ordered using the "Applicator Sizing Diaphragm Seal" selection tool, which is available free of charge. Additional information can be found in the "Planning instructions, diaphragm seal systems" section → 🗎 94

FMD77 - Overview

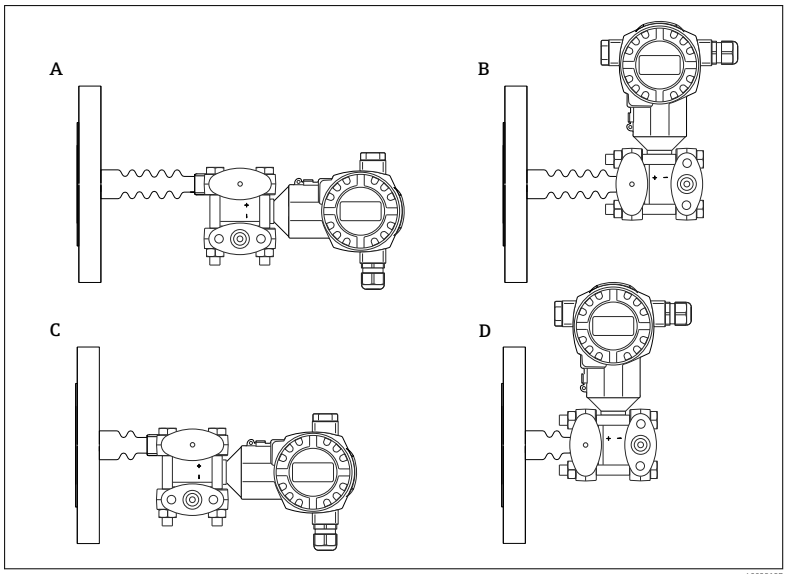

Item	Design	Temperature isolator	Page	Option [1]
A	Transmitter horizontal	long	→ 🗎 57	MA [2]
B	Transmitter vertical	long	→ 🗎 57	MB
C	Transmitter horizontal	short	→ 🗎 57	MC
D	Transmitter vertical	short	→ 🗎 57	MD

1) Product Configurator, order code for "Design; temperature isolator"
2) Standard

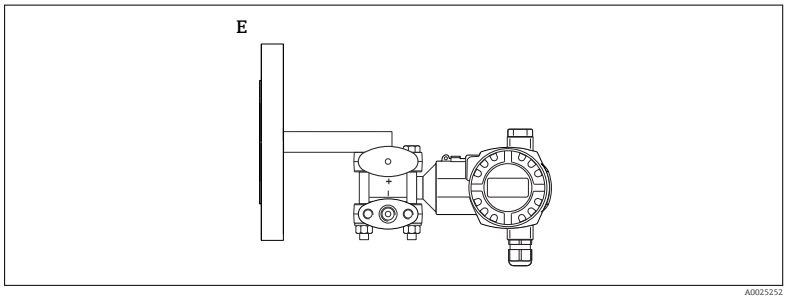

Item	Design	Page	Option [1]
E	U-bracket, Transmitter horizontal (for devices which require a CRN approval)	→ 🗎 58	In combination with CSA approval.

1) Product Configurator, order code for "Process connection"

Process connections FMD77 with diaphragm seal, high-pressure side

Device with long temperature isolator

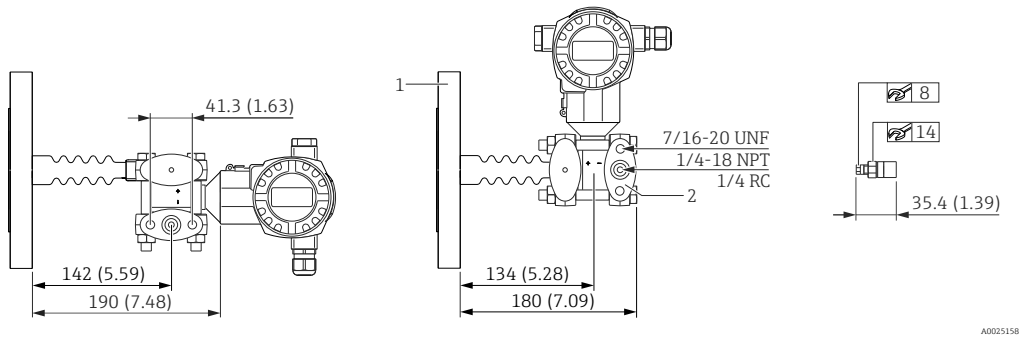

1 *High-pressure side: see "Process connections FMD77 with diaphragm seal, high-pressure side" section → 🗎 59*
2 *Low-pressure side: see "Process connections FMD77 with diaphragm seal, low-pressure side" section → 🗎 63*

Engineering unit mm (in).

Device with short temperature isolator

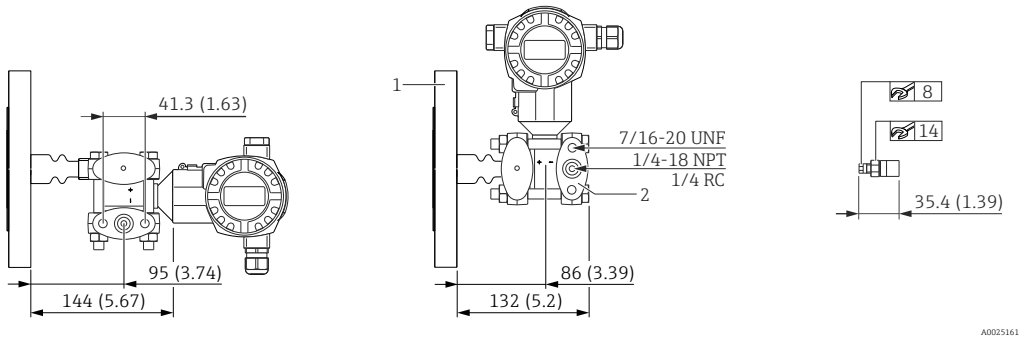

1 *High-pressure side: see "Process connections FMD77 with diaphragm seal, high-pressure side" section → 🗎 59*
2 *Low-pressure side: see "Process connections FMD77 with diaphragm seal, low-pressure side" section → 🗎 63*

Engineering unit mm (in).

Process connections FMD77 with diaphragm seal, high-pressure side

U-bracket with CRN approval

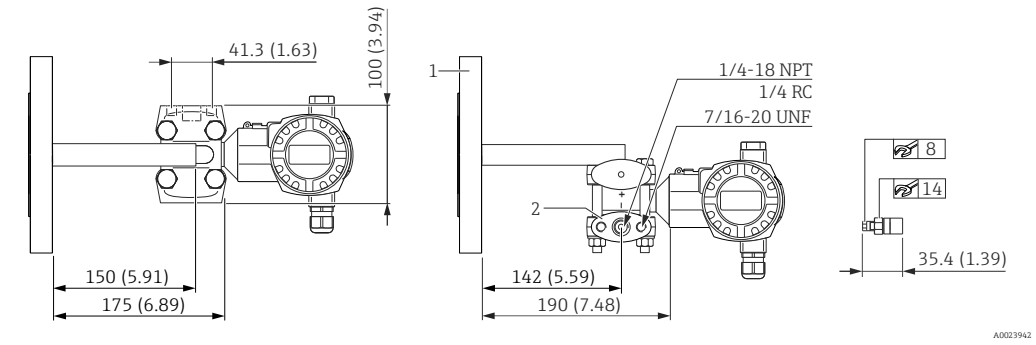

1 High-pressure side: see "Process connections FMD77 with diaphragm seal, high-pressure side" section → 59
2 Low-pressure side: see "Process connections FMD77 with diaphragm seal, low-pressure side" section → 63

Engineering unit mm (in).

Process connections FMD77 with diaphragm seal

- The following drawings are drawings that illustrate how the system works in principle. In other words, the dimensions of a diaphragm seal supplied can deviate from the dimensions given in this document.
- Note "Planning instructions, diaphragm seal systems" section→ 🗎 94
- For further information please contact your local Endress+Hauser Sales Center.

EN/DIN flanges, connection dimensions in accordance with EN 1092-1/DIN 2527

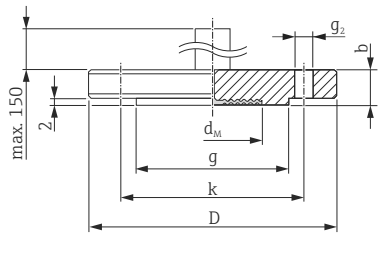

D *Diameter of flange*
b *Thickness*
g *Raised face*
k *Hole circle*
g_2 *Diameter of hole*
d_M *Max. diameter of the process isolating diaphragm*

Engineering unit mm

Material [1) 2) 3)]						Boltholes			Diaphragm seal		Option	
Nominal diameter	Nominal pressure	Shape [4)]	D	b	g	Number	g_2	k	d_M	Weight		
	PN		[mm]	[mm]	[mm]		[mm]	[mm]	[mm]	[kg (lb)]	HP [5)]	LP [6)]
DN 50	10-40	B1 (D)	165	20	102	4	18	125	59	3.0 (6.62)	A [7)]	TA [7)]
DN 80	10-40	B1 (D)	200	24	138	8	18	160	89	5.2 (11.47)	B [7)]	TB [7)]
DN 100	10-16	B1 (C)	220	20	–	8	18	180	89	4.8 (10.58)	F	TC
DN 100	25-40	B1 (D)	235	24	162	8	22	190	89	6.7 (14.77)	G	TD

1) Material: AISI 316L
2) The roughness of the surface in contact with the media, including the raised face of the flanges (all standards) made of Alloy C276, Monel, Tantalum, Rhodium>Gold or PTFE is Ra R_a< 0.8 µm (31.5 µin). Lower surface roughness on request.
3) The flange raised face is made of the same material as the process isolating diaphragm.
4) Description as per DIN 2527 provided in brackets
5) Product Configurator, order code for "Process connection, HP/ HP+LP:"
6) Product Configurator, order code for "Alternative process connection LP side:"
7) Alternatively available with TempC membrane.

EN/DIN flanges with barrel (extended diaphragm seal), connection dimensions in accordance with EN 1092-1/DIN 2527

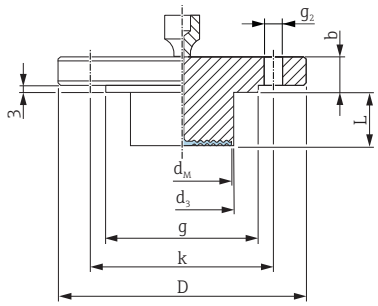

D *Diameter of flange*
b *Thickness*
d_3 *Barrel (extended diaphragm seal) diameter*
L *Barrel (extended diaphragm seal) length*
g *Raised face*
k *Hole circle*
g_2 *Diameter of hole*
d_M *Max. diameter of the process isolating diaphragm*

Engineering unit mm

Flange [1) 2)]								Boltholes			Diaphragm seal		Option [3)] (HP + LP)
Nominal diameter	Nominal pressure	Shape [4)]	D	b	g	L	d_3	Number	g_2	k	d_M	Weight	
	PN		[mm]	[mm]	[mm]	[mm]	[mm]		[mm]	[mm]	[mm]	[kg (lb)]	
DN 80	10-40	B1 (D)	200	24	138	50	76	8	18	160	72	6.2 (13.67)	C
						100						6.7 (14.77)	
						200						7.8 (17.20)	

1) material: AISI 316L
2) In the case of process isolating diaphragms made of Alloy C276, Monel oder tantalum, the raised face of the flange and the barrel pipe are made of 316L.
3) Product Configurator, order code for "Process connection, HP/ HP+LP:"
4) Description as per DIN 2527 provided in brackets

Process connections FMD77 with diaphragm seal

ASME flanges, connection dimensions in accordance with B 16.5, raised face RF

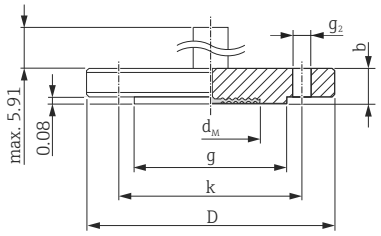

D *Diameter of flange*
b *Thickness*
g *Raised face*
k *Hole circle*
g_2 *Diameter of hole*
d_M *Max. diameter of the process isolating diaphragm*

Engineering unit in

Flange [1) 2) 3)]					Boltholes			Diaphragm seal	Weight	Approval [4)]	Option	
Nominal diameter	Class	D	b	g	Number	g_2	k	d_M				
[in]	[lb./sq.in]	[in]	[in]	[in]		[in]	[in]	[in]	[kg (lb)]		HP [5)]	LP [6)]
2	150	6	0.75	3.62	4	0.75	4.75	2.32	2.6 (5.73)	CRN	N [7)]	TE [7)]
2	300	6.5	0.88	3.62	8	0.75	5	2.32	3.4 (7.5)	CRN	O [7)]	TF [7)]
2	400/600	6.5	1	3.62	8	0.75	5	2.32	4.3 (9.48)	-	J	-
3	150	7.5	0.94	5	4	0.75	6	3.5	5.1 (11.25)	CRN	P [7)]	TG [7)]
3	300	8.25	1.12	5	8	0.75	6	3.5	7.0 (15.44)	CRN	R [7)]	TH [7)]
4	150	9	0.94	6.19	8	0.75	7.5	3.5	7.2 (15.88)	CRN	T	TI
4	300	10	1.25	6.19	8	0.88	7.88	3.5	11.7 (25.8)	CRN	W	TJ

1) Material: AISI 316/316L. Combination of AISI 316 for required pressure resistance and AISI 316L for required chemical resistance (dual rated)
2) The roughness of the surface in contact with the medium including the raised face of the flanges (all standards) made of Alloy C276, Monel, tantalum, rhodium-gold or PTFE is R_a< 0.8 µm (31.5 µin). Lower surface roughness on request.
3) The flange raised face is made of the same material as the process isolating diaphragm.
4) CSA approval: Product Configurator, order code for "Approval"
5) Product Configurator, order code for "Process connection, HP/ HP+LP:"
6) Product Configurator, order code for "Alternative process connection LP side:"
7) Alternatively available with TempC membrane.

ASME flanges with barrel (extended diaphragm seal), connection dimensions in accordance with ASME B 16.5, raised face RF

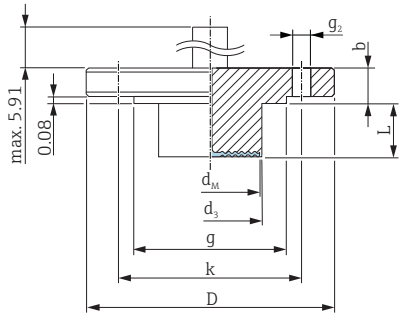

D *Diameter of flange*
b *Thickness*
d_3 *Barrel (extended diaphragm seal) diameter*
L *Barrel (extended diaphragm seal) length*
g *Raised face*
k *Hole circle*
g_2 *Diameter of hole*
d_M *Max. diameter of the process isolating diaphragm*

Engineering unit in

Flange [1) 2)]							Boltholes			Diaphragm seal	Weight	Option [3)] (HP + LP)
Nominal diameter	Class	D	b	g	L	d_3	Number	g_2	k	d_M		
[in]	[lb./sq.in]	[in]	[in]	[in]	[in]	[in]		[in]	[in]		[kg (lb)]	
3	150	7.5	0.94	5	2	2.99	4	0.75	6	2.83	6 (13.23)	Q
					4						6.6 (14.55)	
					6						7.1 (15.66)	
					8						7.7 (16.98)	

1) material: AISI 316/316L
2) In the case of process isolating diaphragms made of Alloy C276, Monel oder tantalum, the raised face of the flange and the barrel pipe are made of 316L.
3) Product Configurator, order code for "Process connection, HP/ HP+LP."

Process connections FMD77 with diaphragm seal

JIS flanges, connection dimensions in accordance with JIS B 2220 BL, raised face RF

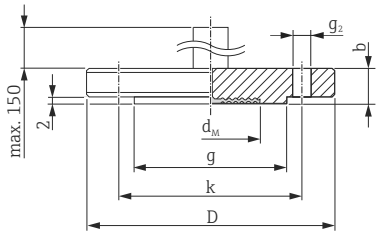

D *Diameter of flange*
b *Thickness*
g *Raised face*
k *Hole circle*
g_2 *Diameter of hole*
d_M *Max. diameter of the process isolating diaphragm*

Engineering unit mm

Flange [1) 2) 3)]					Boltholes			Diaphragm seal	Weight	Option	
Nominal diameter	Nominal pressure	D	b	g	Number	g_2	k	d_M			
		[mm]	[mm]	[mm]		[mm]	[mm]	[mm]	[kg (lb)]	HP [4)]	LP [5)]
50 A	10 K	155	16	96	4	19	120	59	2.3 (5.07)	X	TK
80 A	10 K	185	18	126	8	19	150	89	3.5 (7.72)	1	TL
100 A	10 K	210	18	151	8	19	175	89	4.7 (10.36)	4	TM

1) material: AISI 316
2) The roughness of the surface in contact with the medium including the raised face of the flanges (all standards) made of Alloy C276, Monel, tantalum, rhodium-gold or PTFE is R_a< 0.8 µm (31.5 µin). Lower surface roughness on request.
3) The flange raised face is made of the same material as the process isolating diaphragm.
4) Product Configurator, order code for "Process connection, HP/ HP+LP:"
5) Product Configurator, order code for "Alternative process connection LP side:"

Process connections FMD77 with diaphragm seal, low-pressure side

Process connection low-pressure side	Material	Seal	Option [1)]
Mounting: 7/16 – 20 UNF, Process isolating diaphragm low-pressure side AISI 316L			
1/4 – 18 NPT IEC 61518	C22.8	FKM Viton	B
1/4 – 18 NPT IEC 61518,	AISI 316L	FKM Viton	D
1/4 – 18 NPT IEC 61518	Alloy C276	FKM Viton	F
1/4 – 18 NPT IEC 61518	AISI 316L	PTFE+C4-ring	H
1/4 – 18 NPT IEC 61518	Alloy C276	PTFE+C4-ring	J
1/4 – 18 NPT IEC 61518	AISI 316L	EPDM	K
1/4 – 18 NPT IEC 61518	Alloy C276	EPDM	L
1/4 – 18 NPT IEC 61518	AISI 316L	Kalrez	M
1/4 – 18 NPT IEC 61518	Alloy C276	Kalrez	N
1/4 – 18 NPT IEC 61518	AISI 316L	Chemraz	P
1/4 – 18 NPT IEC 61518	Alloy C276	Chemraz	Q
1/4 – 18 NPT IEC 61518	AISI 316L	FKM Viton, cleaned from oil and grease	S
1/4 – 18 NPT IEC 61518	AISI 316L	FKM Viton, cleaned for oxygen service	T

Process connection low-pressure side	Material	Seal	Option [1]
RC 1/4	AISI 316L	FKM Viton	U
LP diaphragm seal and capillary	AISI 316L	welded	1

1) Product Configurator, order code for "Process connection, LP side; seal:"

FMD78: Selecting the process connection and capillary line

The device can be fitted with different process connections on the high-pressure side (HP) and on the low-pressure side (LP).

The FMD78 can also be fitted with different capillary lengths on the high-pressure side (HP) and on the low-pressure side (LP).

When using diaphragm seal systems with a capillary, sufficient strain relief must be provided to prevent the capillary from bending (capillary bending radius ≥ 100 mm (3.94 in)).

Example:
- Process connection on high-pressure side = DN80 flange
- Process connection on low-pressure side = DN50 flange
- Capillary length on high-pressure side = 2 m (6.6 ft)
- Capillary length on low-pressure side = 5 m (16 ft)

Your benefits:
- Thanks to the variety of order options, the devices can be optimally adapted to the given installation situation
- Reduced costs due to optimum system design
- Easier installation due to adjusted length of capillary on low-pressure side and high-pressure side
- Easier adaptation to existing installation situations

Ordering information:
- Process connections are indicated in the relevant section by HP (high-pressure side) and LP (low-pressure side)
- Order details for capillary lengths → 🗎 86

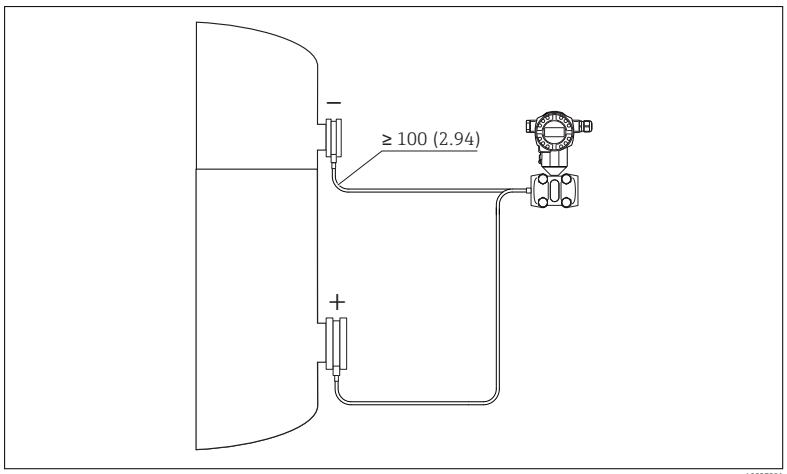

A0027891

Due to the use of different process connections and capillary lines, it is essential that the device be designed/ordered using the "Applicator Sizing Diaphragm Seal" selection tool, which is available free of charge. Additional information can be found in the "Planning instructions, diaphragm seal systems" section → 🗎 94

FMD78 basic device

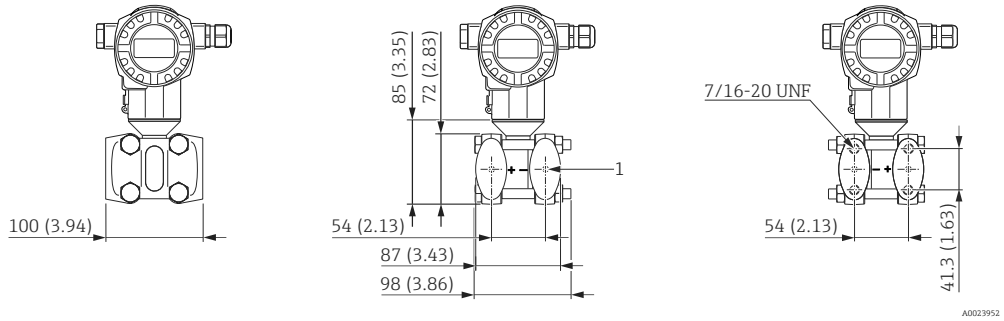

1 Diaphragm seal mount

Engineering unit mm (in). Front view, left-hand side view, right-hand side view. Nuts are always located on the minus side.

Process connections FMD78 with diaphragm seal

- The following drawings are drawings that illustrate how the system works in principle. In other words, the dimensions of a diaphragm seal supplied can deviate from the dimensions given in this document.
- Note "Planning instructions, diaphragm seal systems" section→ 🗎 94
- For further information please contact your local Endress+Hauser Sales Center.

Diaphragm seal cell structure

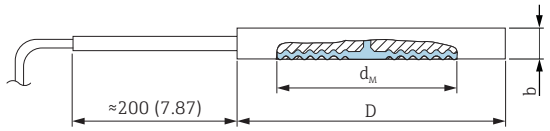

D *Diameter*
d_M *Max. diameter of the process isolating diaphragm*
b *Thickness*

Engineering unit mm (in)

Flange					Diaphragm seal		Approval [1]	Option	
Material	Nominal diameter	Nominal pressure [2]	D	b	d_M	Weight of two diaphragm seals [kg (lb)]		HP [3]	LP [4]
			[mm]	[mm]	[mm]				
AISI 316L	DN 50	PN 16-400	102	20	59	2.6 (5.73)	-	UF	UL
	DN 80	PN 16-400	138	20	89	4.6 (10.14)	-	UH	UM
	DN 100	PN 16-400	162	20	89	6.2 (13.67)	-	UJ	UN
	[in]	[lb/sq.in]	[in (mm)]	[in (mm)]	[in (mm)]				
	2	150-2500	3.9 (99)	0.79 (20)	2.32 (59)	2.6 (5.73)	CRN	VF	UP
	3	150-2500	5 (127)	0.79 (20)	3.50 (89)	4.6 (10.14)	CRN	VH	UR
	4	150-2500	6.22 (158)	0.79 (20)	3.50 (89)	6.2 (13.67)	CRN	VJ	US

1) CSA approval: Product Configurator, order code for "Approval"
2) The specified nominal pressure applies to the diaphragm seal. The maximum pressure for the measuring device is dependent on the lowest-rated element, with regard to pressure, of the selected components→ 🗎 47.
3) Product Configurator, order code for "Process connection, HP/ HP+LP:"
4) Product Configurator, order code for "Alternative process connection LP side:"

Process connections FMD78 with diaphragm seal

Threaded separators

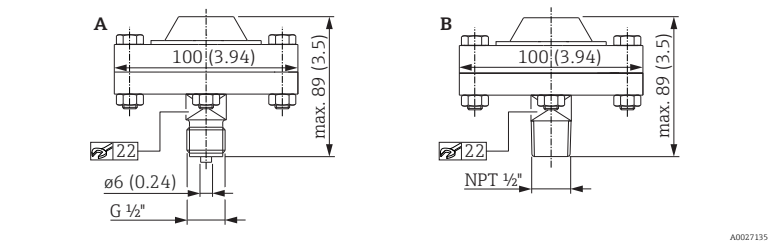

Engineering unit mm (in)

Position	Designation	Material	Measuring range [bar (psi)]	Nominal pressure	Weight [kg (lb)]	Option [1]
A	Threaded, ISO 228 G ½ A EN837 with PTFE seal −40 to +260 °C (−40 to +500 °F)	AISI 316L, screws made of A4	≤ 40 (580)	PN 40	1.43 (3.15)	GA
B	Threaded, ANSI ½ MNPT with PTFE seal −40 to +260 °C (−40 to +500 °F)					RL

1) Product Configurator, order code for "Process connection, HP/ HP+LP:"

DRD DN50 (65 mm)

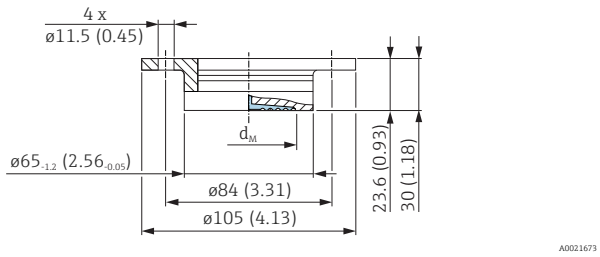

d_M *Max. diameter of the process isolating diaphragm*

Engineering unit mm (in)

Material [1]	Nominal pressure	d_M Standard [mm]	d_M with TempC membrane [mm]	Weight [kg (lb)]	Option HP [2]	Option LP [3]
AISI 316L	PN 25	50	48	0.75 (1.65)	TK [4]	UH [4]

1) Surface roughness of the wetted surfaces R_a < 0.76 µm (29.9 µin) as standard.
2) Product Configurator, order code for "Process connection, HP/ HP+LP:"
3) Product Configurator, order code for "Alternative process connection LP side:"
4) Alternatively available with TempC membrane.

Tri-Clamp ISO 2852

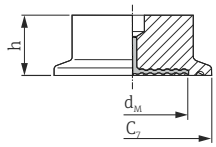

C7 Diameter of flange
h Height
d_M Max. diameter of the process isolating diaphragm

Engineering unit mm (in)

Material [1]	Nominal diameter ISO 2852	Nominal diameter DIN 32676	Nominal diameter	C_7	d_M		h	Weight	Approval [2]	Option	
					Standard	with TempC membrane					
			[in]	[mm]	[mm]	[mm]	[mm]	[kg (lb)]		HP [3]	LP [4]
AISI 316L	ND 25 / 33.7	DN 25	1	50.5	24	-	37	0.32 (0.71)	EHEDG, 3A, CRN	TB	UA
	ND 38	DN 40	1 ½	50.5	36	36	30	1 (2.21)	EHEDG, 3A, CRN	TC [5] [6]	UB [5] [6]
	ND 51 / 40	DN 50	2	64	48	41	30	1.1 (2.43)	EHEDG, 3A, CRN	TD [5] [6]	UC [5] [6]
	ND 63.5	DN 50	2 ½	77.5	61	61	30	0.7 (1.54)	EHEDG, 3A	TE [7]	UD [7]
	ND 76.1	–	3	91	73	61	30	1.2 (2.65)	EHEDG, 3A, CRN	TF [6]	UE [6]

1) Surface roughness of the wetted surfaces R_a < 0.76 µm (29.9 µin) as standard. Lower surface roughness available on request.
2) CSA approval: Product Configurator, order code for "Approval"
3) Product Configurator, order code for "Process connection, HP/ HP+LP:"
4) Product Configurator, order code for "Alternative process connection LP side:"
5) Optionally available as ASME-BPE-compliant diaphragm seal version for use in biochemical processes, surfaces in contact with medium R_a < 0.38 µm (15 µin)), electropolished; order using the order code for "Additional options 1" or "Additional options 2", option "O".
6) Alternatively available with TempC membrane.
7) With TempC membrane

Process connections FMD78 with diaphragm seal

SMS nozzles with coupling nut

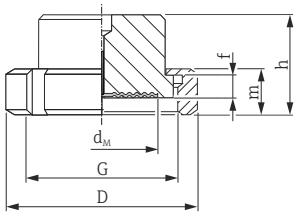

D *Diameter*
f *Nozzle height*
G *Thread*
h *Height*
m *Height*
d_M *Max. diameter of the process isolating diaphragm*

Engineering unit mm (in)

Material [1]	Nominal diameter	Nominal pressure	D	f	G	m	h	d_M	Weight	Approval	Option	
			[mm]	[mm]		[mm]	[mm]	[mm]	[kg (lb)]		HP [2]	LP [3]
AISI 316L	1 ½	PN 25	74	4	Rd 60 – 1/6	25	57	36	0.65 (1.43)	3A, EHEDG	TH [4]	UF [4]
	2	PN 25	84	4	Rd 70 – 1/6	26	62	48	1.05 (2.32)	3A, EHEDG	TI [4]	UG [4]

1) Surface roughness of the wetted surfaces R_a < 0.76 µm (29.9 µin) as standard.
2) Product Configurator, order code for "Process connection, HP/ HP+LP:"
3) Product Configurator, order code for "Alternative process connection LP side:"
4) With TempC membrane

Hygienic connection, sanitary tank spud, barrel (extended diaphragm seal) 2"

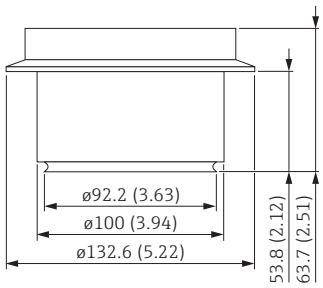

Engineering unit mm (in)

Material [1]	Weight kg (lbs)	Approval	Option [2]
AISI 316L	2.5 (5.51)	3A	WH [3]

1) Roughness of wetted surfaces R_a < 0.76 µm (29.9 µin) as standard. Lower surface roughness on request.
2) Product Configurator, order code for "Process connection, HP/ HP+LP:"
3) With TempC membrane

Taper adapter with coupling nut, DIN 11851

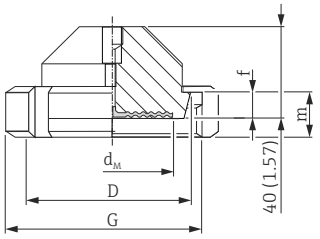

D *Diameter*
f *Nozzle height*
G *Thread*
m *Height*
d_M *Max. diameter of the process isolating diaphragm*

Engineering unit mm (in)

Material 1)	Taper adapter				Slotted nut		Diaphragm seal			Approval	Option	
							d_M		Weight			
	Nominal diameter	Nominal pressure	D	f	G	m	Standard	with TempC membrane				
		[bar]	[mm]	[mm]		[mm]	[mm]	[mm]	[kg (lb)]		HP 2)	LP 3)
AISI 316L	DN 32	PN 40	50	10	Rd 58 x 1/6"	21	32	28	0.45 (0.99)	3A, EHEDG	MI 4)	TP 4)
	DN 40	PN 40	56	10	Rd 65 x 1/6"	21	38	36	0.45 (0.99)	3A, EHEDG	MZ 4)	TU 4)
	DN 50	PN 25	68.5	11	Rd 78 x 1/6"	19	52	48	1.1 (2.43)	3A, EHEDG	MR 5)	TR 5)
	DN 65	PN 25	86	12	Rd 95 x 1/6"	21	66	61	2.0 (4.41)	3A, EHEDG	MS 5)	TS 5)
	DN 80	PN 25	100	12	Rd 110 x 1/4"	26	81	61	2.55 (5.62)	3A, EHEDG	MT 5)	TT 5)

1) Surface roughness of the wetted surfaces R_a < 0.76 µm (29.9 µin) as standard.
2) Product Configurator, order code for "Process connection, HP/ HP+LP:"
3) Product Configurator, order code for "Alternative process connection LP side:"
4) with TempC membrane
5) Alternatively available with TempC membrane.

Process connections FMD78 with diaphragm seal

Varivent for pipes

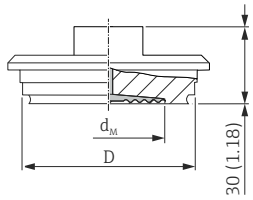

D Diameter
d_M Max. diameter of the process isolating diaphragm

Engineering unit mm (in)

Material [1]	Designation	Nominal pressure	D	d_M		Weight	Approval	Option	
				Standard	with TempC membrane				
			[mm]	[mm]	[mm]	[kg (lb)]		HP [2]	LP [3]
AISI 316L	Type F for pipes DN 25 - DN 32	PN 40	50	34	36	0.4 (0.88)	EHEDG, 3A	TU [4]	UK [4]
AISI 316L	Type N for pipes DN 40 - DN 162	PN 40	68	58	61	0.8 (1.76)	EHEDG, 3A	TR [5]	-

1) Surface roughness of the wetted surfaces R_a < 0.76 µm (29.9 µin) as standard.
2) Product Configurator, order code for "Process connection, HP/ HP+LP:"
3) Product Configurator, order code for "Alternative process connection LP side:"
4) With TempC membrane
5) Alternatively available with TempC membrane.

Process connections FMD78 with diaphragm seal

NEUMO BioControl

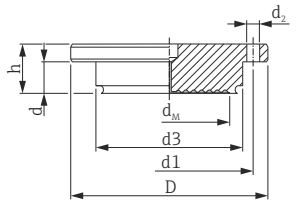

D Diameter
h/d Height
d1/ d3 diameter
d_2 Diameter of hole
d_M Max. diameter of the process isolating diaphragm

Engineering unit mm (in)

Material [1]	NEUMO BioControl (Process temperature range: −10 to +200 °C (+14 to +392 °F))							Diaphragm seal			Approval	Option	
								d_M		Weight			
	Nominal diameter	Nominal pressure	D	d_2	d_3	d_1	h	Standard	with TempC membrane				
		[bar]	[mm]	[mm]	[mm]	[mm]	[mm]	[mm]	[mm]	[kg (lb)]		HP [2]	LP [3]
AISI 316L	DN 50	PN 16	90	4 x Ø 9	50	70	27	40	36	1.1 (2.43)	3A	S4 [4]	TV
	DN 80	PN 16	140	4 x Ø 11	87.4	115	37	61	61	2.6 (5.73)	3A	S6 [4]	TW

1) Surface roughness of the wetted surfaces R_a < 0.76 µm (29.9 µin) as standard.
2) Product Configurator, order code for "Process connection, HP/ HP+LP:"
3) Product Configurator, order code for "Alternative process connection LP side:"
4) With TempC membrane

Universal process adapter

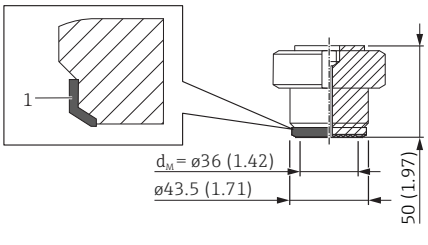

1 Silicone molded seal

Engineering unit mm (in)

Designation	Nominal pressure	Material [1]	Weight	Approval	Option	
			[kg (lb)]		HP [2]	LP [3]
Universal adapter with silicone molded seal (spare part no.: 52023572) FDA 21CFR177.2600/USP Class VI	PN 10	AISI 316L (1.4435)	0.8 (1.76)	3A, EHEDG	00 [4] [5]	UT [4] [5]

1) Surface roughness of the wetted surfaces R_a< 0.76 µm (29.9 µin) as standard.
2) Product Configurator, order code for "Process connection, HP/ HP+LP:"
3) Product Configurator, order code for "Alternative process connection LP side:"
4) Endress+Hauser supplies these slotted nuts in stainless steel AISI 304 (DIN/EN material number 1.4301) or in AISI 304L (DIN/EN material number 1.4307).
5) With TempC membrane.

Process connections FMD78 with diaphragm seal

EN/DIN flanges, connection dimensions in accordance with EN 1092-1/DIN 2527, JIS flanges, connection dimensions in accordance with JIS B 2220 BL

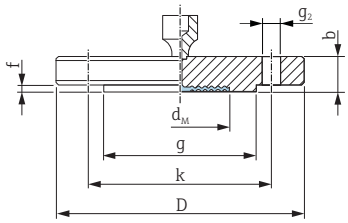

D *Diameter of flange*
b *Thickness*
g *Raised face*
f *Thickness of raised face*
k *Hole circle*
g_2 *Diameter of hole*

Engineering unit mm

Material [1) 2) 3)]							Boltholes			Diaphragm seal		Option	
Nominal diameter	Nominal pressure	Shape [4)]	D	b	g	f	Number	g_2	k	d_M [mm]	Weight		
			[mm]	[mm]	[mm]	[mm]		[mm]	[mm]		[kg (lb)]	HP [5)]	LP [6)]
DN 50	PN 10-40	B1 (D)	165	20	102	3	4	18	125	59	3.0 (6.62)	B3 [7)]	TA [7)]
DN 80	PN 10-40	B1 (D)	200	24	138	3.5	8	18	160	89	5.3 (11.69)	B5 [7)]	TB [7)]
DN 100	PN 10-16	B1 (C)	220	20	–	4	8	18	180	89	4.5 (9.92)	BT	TC
DN 100	PN 25-40	B1 (D)	235	24	162	5	8	22	190	89	7 (15.44)	B6	TD

1) Material: AISI 316L
2) The roughness of the surface in contact with the media, including the raised face of the flanges (all standards) made of Alloy C276, Monel, Tantalum, Rhodium>Gold or PTFE is Ra R_a< 0.8 µm (31.5 µin). Lower surface roughness on request.
3) The flange raised face is made of the same material as the process isolating diaphragm.
4) Description as per DIN 2527 provided in brackets
5) Product Configurator, order code for "Process connection, HP/ HP+LP:"
6) Product Configurator, order code for "Alternative process connection LP side:"
7) Alternatively available with TempC membrane.

Material [1) 2) 3)]						Boltholes			Diaphragm seal		Option	
Nominal diameter	Nominal pressure	D	b	g	f	Number	g_2	k	d_M [mm]	Weight		
		[mm]	[mm]	[mm]	[mm]		[mm]	[mm]		[kg (lb)]	HP [4)]	LP [5)]
50 A	10 K	155	16	96	2	4	19	120	59	2.3 (5.07)	CF	TK
80 A	10 K	185	18	127	2	8	19	150	89	3.3 (7.28)	KL	TL
100 A	10 K	210	18	151	2	8	19	175	89	4.4 (9.7)	KH	TM

1) Material: AISI 316L
2) The roughness of the surface in contact with the media, including the raised face of the flanges (all standards) made of Alloy C276, Monel, Tantalum, Rhodium>Gold or PTFE is Ra R_a< 0.8 µm (31.5 µin). Lower surface roughness on request.
3) The flange raised face is made of the same material as the process isolating diaphragm.
4) Product Configurator, order code for "Process connection, HP/ HP+LP:"
5) Product Configurator, order code for "Alternative process connection LP side:"

Process connections FMD78 with diaphragm seal

EN/DIN flanges with barrel (extended diaphragm seal), connection dimensions in accordance with EN 1092-1/DIN 2527 and DIN 2501-1

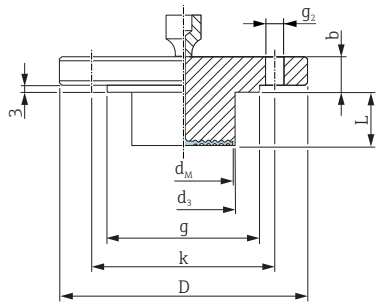

D *Diameter of flange*
b *Thickness*
g *Raised face*
k *Hole circle*
g_2 *Diameter of hole*
d_M *Max. diameter of the process isolating diaphragm*
d_3 *Barrel (extended diaphragm seal) diameter*
L *Barrel (extended diaphragm seal) length*

Engineering unit mm

Flange [1) 2)]								Boltholes			Diaphragm seal		Option [3)] (HP + LP)
Nominal diameter	Nominal pressure	Shape [4)]	D	b	g	L	d_3	Number	g_2	k	d_M [mm]	Weight	
			[mm]	[mm]	[mm]	[mm]	[mm]		[mm]	[mm]		[kg (lb)]	
DN 80	PN 10-40	B1 (D)	200	24	138	50	76	8	18	160	72	6.2 (13.67)	D4
						100						6.7 (14.77)	
						200						7.8 (17.20)	

1) material: AISI 316L
2) In the case of process isolating diaphragms made of Alloy C276, Monel oder tantalum, the raised face of the flange and the barrel pipe are made of 316L.
3) Product Configurator, order code for "Process connection, HP/ HP+LP:"
4) Description as per DIN 2527 provided in brackets

Process connections FMD78 with diaphragm seal

ASME flanges, in accordance with connection dimensions ASME B 16.5, raised face RF

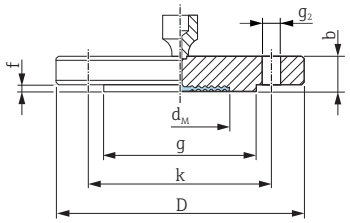

D *Diameter of flange*
b *Thickness*
g *Raised face*
f *Thickness of raised face*
k *Hole circle*
g_2 *Diameter of hole*

Engineering unit in

Material [1) 2) 3)]						Boltholes			Diaphragm seal		Approval [4)]	Option	
Nominal diameter	Class	D	b	g	f	Number	g_2	k	d_M	Weight			
[in]	[lb./sq.in]	[in]	[in]	[in]	[in]		[in]	[in]	[in]	[kg (lb)]		HP [5)]	LP [6)]
2	150	6	0.75	3.62	0.06	4	0.75	4.75	2.32	2.2 (4.85)	CRN	AF [7)]	TE [7)]
2	300	6.5	0.88	3.62	0.06	8	0.75	5	2.32	3.4 (7.5)	CRN	AR [7)]	TF [7)]
2	400/600	6.5	1	3.62	0.25	8	0.75	5	2.32	4.3 (9.48)	-	AJ	-
3	150	7.5	0.94	5	0.06	4	0.75	6	3.5	5.1 (11.25)	CRN	AG [7)]	TG [7)]
3	300	8.25	1.12	5	0.06	8	0.88	6	3.5	7.0 (15.44)	CRN	AS [7)]	TH [7)]
4	150	9	0.94	6.19	0.06	8	0.75	7.5	3.5	7.2 (15.88)	CRN	AH	TI
4	300	10	1.25	6.19	0.06	8	0.88	7.88	3.5	11.7 (25.8)	CRN	AT	TJ

1) Material AISI 316/316L: Combination of AISI 316 for required pressure resistance and AISI 316L for required chemical resistance (dual rated)
2) The roughness of the surface in contact with the media, including the raised face of the flanges (all standards) made of Alloy C276, Monel, Tantalum, Rhodium>Gold or PTFE is R_a< 0.8 µm (31.5 µin). Lower surface roughness on request.
3) The flange raised face is made of the same material as the process isolating diaphragm.
4) CSA approval: Product Configurator, order code for "Approval"
5) Product Configurator, order code for "Process connection, HP/ HP+LP:"
6) Product Configurator, order code for "Alternative process connection LP side:"
7) Alternatively available with TempC membrane.

ASME flanges with barrel (extended diaphragm seal), connection dimensions in accordance with ASME B 16.5, raised face RF

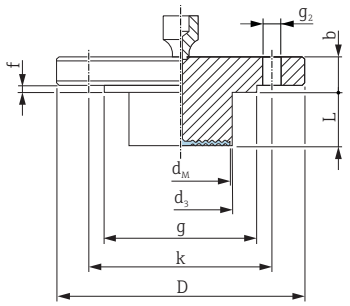

D *Diameter of flange*
b *Thickness*
g *Raised face*
k *Hole circle*
g_2 *Diameter of hole*
d_M *Max. diameter of the process isolating diaphragm*
d_3 *Barrel (extended diaphragm seal) diameter*
L *Barrel (extended diaphragm seal) length*

Engineering unit in

Flange [1) 2)]						Boltholes			Diaphragm seal		Approval [3)]	Option [4)] (HP + LP)
Nominal diameter	Class	D	b	g	f	Number	g_2	k	d_M	Weight		
[in]	[lb./sq.in]	[in]	[in]	[in]	[in]		[in]	[in]	[in]	[kg (lb)]		
3	150	7.5	0.94	5	0.06	4	0.75	6	2.83	[5)]	CRN	J4 [5)]
4	150	9	0.94	6.19	0.06	8	0.75	7.5	3.5	[5)]	CRN	J5 [5)]

1) Material: AISI 316/316L. Combination of AISI 316 for required pressure resistance and AISI 316L for required chemical resistance (dual rated)
2) In the case of process isolating diaphragms made of Alloy C276, Monel or tantalum, the raised face of the flange and the barrel pipe are made of 316L.
3) CSA approval: Product Configurator, order code for "Approval"
4) Product Configurator, order code for "Process connection, HP/ HP+LP:"
5) Choice of 2", 4", 6" or 8" barrel (extended diaphragm seal), for diameter and weight of barrel (extended diaphragm seal) see the following table

Option [1)]	Nominal diameter	Class	(L)	d_3	Weight
	[in]	[lb./sq.in]	in (mm)	in (mm)	[kg (lb)]
J4	3	150	2 (50.8) / 4 (101.6) / 6 (152.4) / 8 (203.2)	2.99 (76)	6.0 (13.2) / 6.6 (14.5) / 7.1 (15.7) / 7.8 (17.2)
J5	4	150	2 (50.8) / 4 (101.6) / 6 (152.4) / 8 (203.2)	3.7 (94)	8.6 (19) / 9.9 (21.8) / 11.2 (24.7) / 12.4 (27.3)

1) Product Configurator, order code for "Process connection"

Separate housing: Wall and pipe mounting with mounting bracket

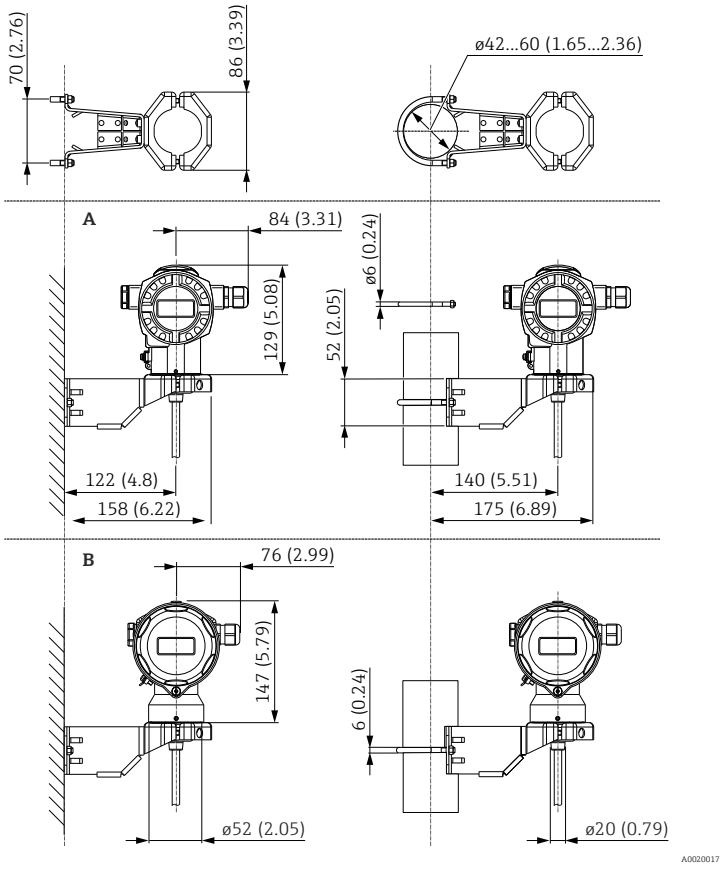

Engineering unit mm (in)

Position	Designation	Weight in kg (lb)		Option [1]
		Housing (T14 or T17)	Mounting bracket	
A	Dimensions with T14 housing, optional side display	→ 📖 49	0.5 (1.10)	U
B	Dimensions with T17 housing, optional side display			

1) Product Configurator, order code for "Additional options 2", version "G"

Also available for order as a separate accessory: Part number 71102216

Materials not in contact with process

Transmitter housing

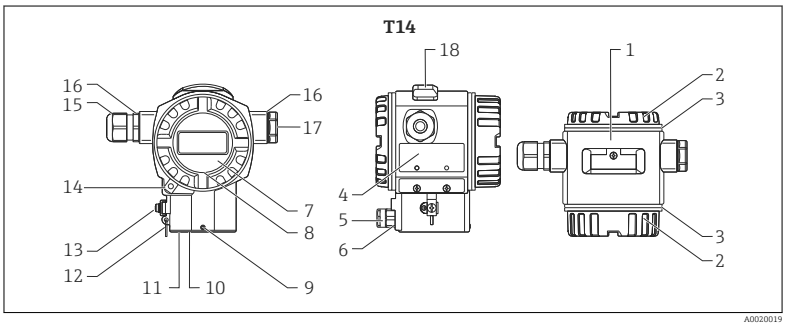

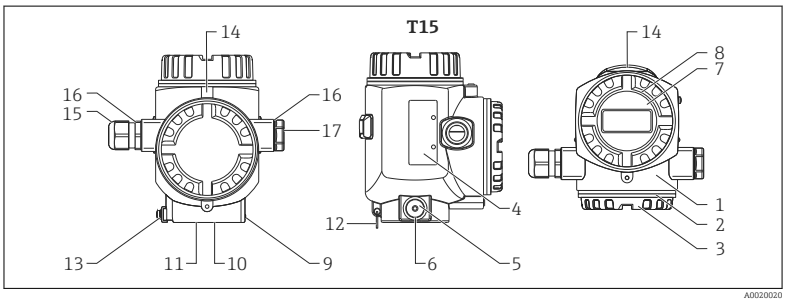

Item number	Component part	Material
1	T14 and T15 housing, RAL 5012 (blue)	▪ Die-cast aluminum with protective powder-coating on polyester base ▪ Thread coating: Heat-curing lubricant varnish
2	Cover, RAL 7035 (gray)	Die-cast aluminum with protective powder-coating on polyester base
3	Cover seal	EPDM
4	Nameplates	▪ AISI 316L (1.4404), if T14 housing is precision-cast ▪ Anodized aluminum, if housing T14/T15 of die-cast aluminum
5	Pressure compensation filter	AISI 316L (1.4404) and PBT-FR
6	Pressure compensation filter, O-ring	VMQ or EPDM
7	Sight glass	Mineral glass
8	Sight glass seal	Silicone (VMQ)
9	Screw	A4
10	Sealing ring	EPDM
11	Snap ring	PA66-GF25
12	Snap ring for nameplates	AISI 304 (1.4301)/AISI 316 (1.4401)
13	External ground terminal	AISI 304 (1.4301)
14	Cover clamp	Clamp AISI 316L (1.4435), screw A4
15	Cable entry	Polyamide (PA) or CuZn nickel-plated
16	Seal of cable entry and plug	Silicone (VMQ)

Item number	Component part	Material
17	Blind plug	PBT-GF30 FR, for dust ignition-proof: AISI 316L (1.4435)
18	External operation (keys and key cover), RAL 7035 (gray)	Polycarbonate PC-FR, screw A4

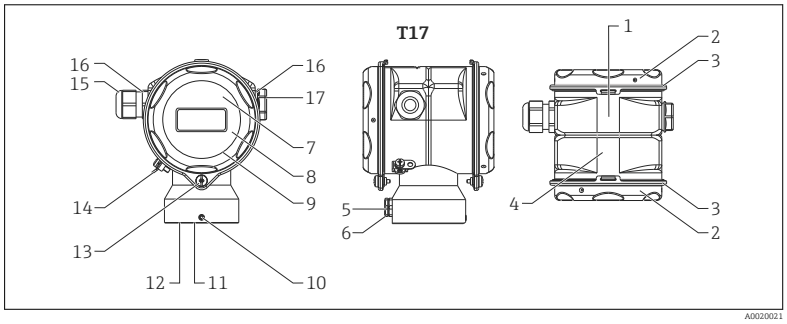

Item number	Component part	Material
1	T17 housing	AISI 316L (1.4404)
2	Cover	
3	Cover seal	EPDM
4	Nameplates	Lasered on
5	Pressure compensation filter	AISI 316L (1.4404) and PBT-FR
6	Pressure compensation filter, O-ring	VMQ or EPDM
7	Sight glass for non-hazardous area, ATEX Ex ia, NEPSI Zone 0/1 Ex ia, IECEx Zone 0/1 Ex ia, FM NI, FM IS, CSA IS	Polycarbonate (PC)
8	Sight glass for ATEX 1/2 D, ATEX 1/3 D, ATEX 1 GD, ATEX 1/2 GD, ATEX 3 G, FM DIP, CSA dust ignition-proof	Mineral glass
9	Sight glass seal	EPDM
10	Screw	A2-70
11	Sealing ring	EPDM
12	Snap ring	PA6
13	Screw	A4-50 Thread coating: Heat-curing lubricant varnish
14	External ground terminal	AISI 304 (1.4301)
15	Cable entry	Polyamide PA, for dust ignition-proof: CuZn nickel-plated
16	Seal of cable entry and plug	Silicone (VMQ)
17	Blind plug	PBT-GF30 FR, for dust ignition-proof: AISI 316L (1.4435)

Connecting parts

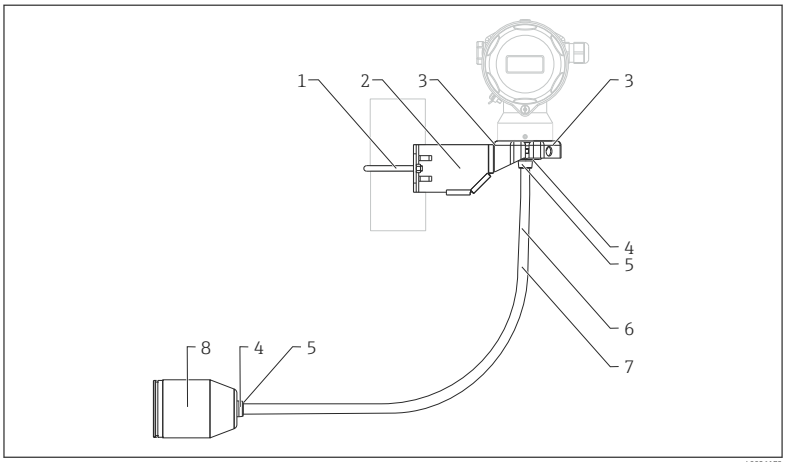

Item number	Component part	Material
1	Mounting bracket	Bracket AISI 316L (1.4404)
2		Screw and nuts A4-70
3		Half-shells: AISI 316L (1.4404)
4	Seal for cable from separate housing	EPDM
5	Gland for cable from separate housing	AISI 316L (1.4404)
6	PE cable for separate housing	abrasion-proof cable with strain-relief Dynema members; shielded using aluminum-coated foil; insulated with polyethylene (PE-LD), black; copper wires, twisted, UV-resistant
7	FEP cable for separate housing	Abrasion-proof cable; shielded using galvanized steel wire netting; insulated with fluorinated ethylene propylene (FEP), black; copper cores, twisted, UV-resistant
8	Process connection adapter for separate housing	AISI 316L (1.4404)

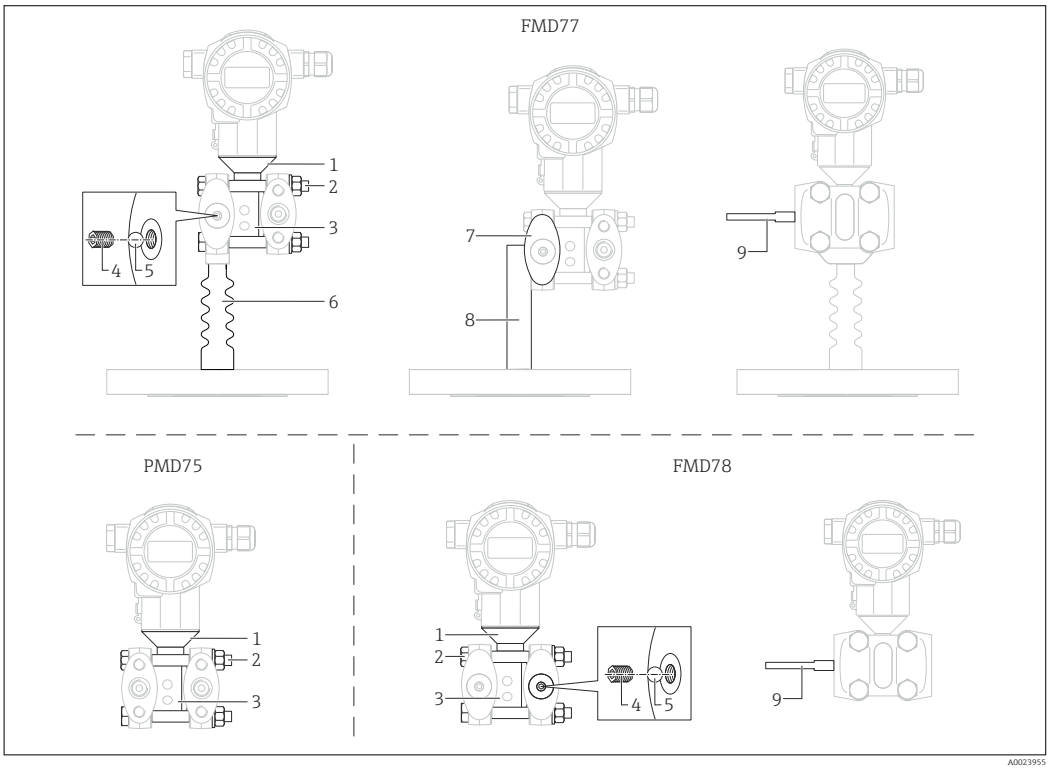

Item number	Component part	Material
1	Connection between the housing and process connection	AISI 316L (1.4404)
2	Screw and nuts	PMD75 PN 160, FMD77, FMD78: ▪ Hex.-headed bolt DIN 931-M12x90-A4-70 ▪ Hex.-headed nut DIN 934-M12-A4-70 PMD75 PN 420: ▪ Hex.-headed bolt ISO 4014-M12x90-A4 ▪ Hex.-headed nut ISO 4032-M12-A4-bs
3	Cell body	AISI 316L (1.4404)
4	Threaded pin	DIN 915 M 6x8 A2-70
5	Bearing	DIN 5401 (1.3505)
6	Temperature isolator	AISI 316L (1.4404)
7	Side flanges	1.4408 / CF3M [1] / AISI 316L
8	U-bracket	AISI 304 (1.4301)
9	Heat-shrink tube (available only if flexible armor for capillary has PVC coating or PTFE hose)	Polyolefin

1) Cast equivalent to material AISI 316L

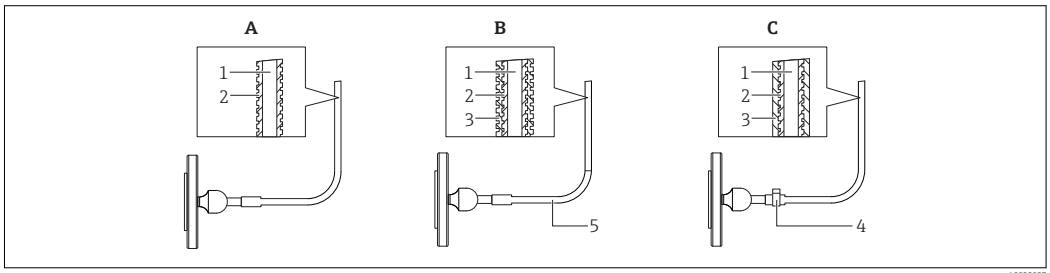

Position	Component part	A Standard [1] Armor for capillary	B PVC-coated Armor for capillary	C PTFE hose Armor for capillary
1	Capillary	AISI 316 Ti (1.4571)	AISI 316 Ti (1.4571)	AISI 316 Ti (1.4571)
2	Flexible armor for capillary	AISI 316L (1.4404) [2]	AISI 316L (1.4404)	AISI 316L (1.4404)
3	Coating/armor	-	PVC [3]	PTFE [4]
4	Single-ear clamp	-	-	1.4301
5	Shrink tubing at capillary junction	-	Polyolefin	-

1) If no option is specified when ordering, order option "SA" is supplied.
2) Product Configurator, order code for "Capillary armoring:" option "SA"
3) Product Configurator, order code for "Capillary armoring:" option "SB"
4) Product Configurator, order code for "Capillary armoring:" option "SC"

Weight

Component part	Weight
Housing	See "Housing" section
Process connection	See "Process connections" section
Capillary with armoring made of AISI 316L (1.4404)	0.16 kg/m (0.35 lb/m) + 0.2 kg (0.44 lb) (weight per capillary line)
Capillary with armoring made of AISI 316L (PVC)	0.21 kg/m (0.46 lb/m) + 0.2 kg (0.44 lb) (weight per capillary line)
Capillary with armoring made of AISI 316L (PTFE)	0.29 kg/m (0.64 lb/m) + 0.2 kg (0.44 lb) (weight per capillary line)

Materials in contact with process

NOTICE

- The device components in contact with the process are specified in the "Mechanical construction" → 🗎 48 and "Ordering information" → 🗎 108 sections.

Delta-ferrite content

A delta-ferrite content of ≤ 3% can be guaranteed and certified for the wetted parts of the FMD78 if option "8" is selected in the "Additional options 1" or "Additional options 2" order code in the Product Configurator.

TSE Certificate of Suitability (Transmissible Spongiform Encephalopathy)

The following applies to all device components in contact with the process:

- They do not contain any materials derived from animals.
- No additives or operating materials derived from animals are used in production or processing.

Process connections

- "Clamp connections" and "Hygienic process connections": AISI 316L (DIN/EN material number 1.4435)
- Endress+Hauser supplies DIN/ EN process connections with threaded connections made of stainless steel as per AISI 316L (DIN/EN material number 1.4404 or 14435). With regard to their stability-temperature property, the materials 1.4404 and 1.4435 are grouped together under 13E0 in EN 1092-1: 2001 Tab. 18. The chemical composition of the two materials can be identical.
- Some process connections are also available in alloy C276 (DIN/EN material number 2.4819). For this purpose see the information in the "Mechanical construction" section.
- Side flanges: 316L, C 22.8 with zinc plating or alloy C 276. The C22.8 side flanges are coated with anti-corrosion protection (zinc, chrome). To prevent the formation of hydrogen and thereby diffusion through the membrane, Endress+Hauser recommends the use of 316L side flanges for applications involving water. Hydrogen diffusion through the membrane leads to measurement errors, or in extreme cases to a device failure.

Process isolating diaphragm

Sensor	Designation	Option [1]
FMD77	AISI 316L, high-pressure side (HP)	1
	Alloy C 276, high-pressure side (HP) [2]	2
	Monel (2.4360), high-pressure side (HP) [2]	3
	Tantalum (UNS R05200), high-pressure side (HP) [2]	5
	AISI 316L with gold-rhodium coating, high-pressure side (HP)	6
	AISI 316L with 0.25 mm (0.01 in)PTFE coating, high-pressure side (HP)	8
FMD77 with capillaries on low-pressure side (LP)	AISI 316L, high-pressure side (HP) + low-pressure side (LP)	H
	AISI C 276, high-pressure side (HP) + low-pressure side (LP)	J
	Monel (2.4360), high-pressure side (HP) + low-pressure side (LP)	K
	Tantalum (UNS R05200), high-pressure side (HP) + low-pressure side (LP)	L
	AISI 316L with gold-rhodium coating, high-pressure side (HP) + low-pressure side (LP)	M
	AISI 316L with 0.25 mm (0.01 in)PTFE coating, high-pressure side (HP) + low-pressure side (LP)	N
FMD78	AISI 316L, TempC	E
	AISI 316L	1
	Alloy C 276 [2]	2
	Monel (2.4360) [2]	3
	Tantalum (UNS R05200) [2]	5
	AISI 316L with gold-rhodium coating	6
	AISI 316L with 0.25 mm (0.01 in) PTFE foil (FDA 21 CFR 177.1550)	8
PMD75	AISI 316L	1
	Alloy C 276 (2.4819)	2
	Monel (2.4360)	3
	Tantalum (UNS R05200)	5
	Alloy C 276 with gold-rhodium coating	6

1) Product Configurator, order code for "Membrane material"
2) The material used in the raised face of the flange is the same as that used in the process isolating diaphragm. For devices with a barrel (extended diaphragm seal), the flange raised face and the barrel pipe are made of 316L.

Seals

Device	Designation	Option [1]
PMD75	FKM Viton	A
	PTFE (PN160bar/16MPa/2400psi)	C [2]
	PTFE (PN250bar/25MPa/3625psi)	D [2]
	NBR	F
	Copper seal ring	H
	Copper seal ring, oxygen service, note pressure and temperature application limits	K
	FKM Viton, cleaned from oil and grease	1
	FKM Viton, cleaned for oxygen service, note pressure and temperature application limits	2
	PTFE, cleaned for oxygen service, note pressure and temperature application limits	3
	EPDM	J [3]

1) Product Configurator, "Seal" ordering feature
2) Suitable for foodstuffs FDA21 CFR 177.1550
3) Suitable for drinking water NSF61.

Fill fluid

FMD77: Diaphragm seal fill fluid

Process connection	Designation	Option [1] [2]
High-pressure side (HP)	Silicone oil (food-safe FDA 21 CFR 175.105)	A
	Vegetable oil (food-safe FDA 21 CFR 172.856)	D
	Inert oil	F
	Low-temperature oil	L
	High-temperature oil	V
Low-pressure side (LP)	..... m capillary, silicone oil	M
	..... m capillary, vegetable oil	N
	..... m capillary, inert oil	O
	..... m capillary; low-temperature oil	P
	..... m capillary; high-temperature oil	Q
	.....ft capillary; silicone oil	R
	..... ft capillary; vegetable oil	S
	..... ft capillary, inert oil	T
	..... ft capillary; low-temperature oil	U
	..... ft capillary; high-temperature oil	W

1) Product Configurator, order code for "Fill fluid"
2) For diaphragm seal devices with 3-A and EHEDG certificates, only select filling oils with FDA approval!

FMD77: Pressure measuring cell fill fluid

FMD77	Designation	Option [1]
With capillary on low-pressure side (LP)	Silicone oil	Standard, if no option was selected.
	Inert oil, PWIS-free	HC
Without capillary on low-pressure side (LP)	Silicone oil	Standard, if no option was selected.

FMD77	Designation	Option [1]
	Inert oil, cleaned for oxygen service	HB
	Inert oil, PWIS-free	HC

1) Product Configurator, order code for "Service"

FMD78: Diaphragm seal fill fluid

Capillary length;	Designation	Option [1]
Symmetrical	..... ft capillary; silicone oil (food-safe FDA 21 CFR 175.105)	A [2]
	..... ft capillary; vegetable oil (food-safe FDA 21 CFR 172.856)	B [2]
	..... ft capillary; high-temperature oil	C [2]
	..... ft capillary; inert oil, oxygen service, observe pressure/temp. application limits	D [2]
	..... ft capillary; low-temperature oil	E [2]
	..... ft capillary, inert oil	F [2]
	..... m capillary; silicone oil (food-safe FDA 21 CFR 175.105)	1 [2]
	..... m capillary; vegetable oil (food-safe FDA 21 CFR 172.856)	2 [2]
	..... m capillary; high-temperature oil	3 [2]
	..... m capillary; inert oil, oxygen service, observe pressure/temp. application limits	4 [2]
	..... m capillary; low-temperature oil	5 [2]
	..... m capillary, inert oil	6 [2]
Asymmetrical Low-pressure side (LP) [3]	..... m capillary, silicone oil, LP side	M [2]
	..... m capillary, vegetable oil, LP side	N [2]
	..... m capillary, inert oil, LP side	O [2]
	..... m capillary, low-temperature oil, LP side	P [2]
	..... m capillary, high-temperature oil, LP side	Q [2]
	..... ft capillary, silicone oil, LP side	R [2]
	..... ft capillary, vegetable oil, LP side	S [2]
	..... ft capillary, inert oil, LP side	T [2]
	..... ft capillary, low-temperature oil, LP side	U [2]
	..... ft capillary, high-temperature oil, LP side	W [2]
Asymmetrical High-pressure side (LP) [4]	..... ft capillary, HP side	V [5]
	..... m capillary, HP side	W [5]

1) For diaphragm seal devices with 3-A and EHEDG certificates, only select filling oils with FDA approval!
2) Product Configurator, order code for "Fill fluid"
3) If the capillary length for asymmetrical LP or HP is identical, select a symmetrical capillary length when ordering.
4) If the capillary length for asymmetrical LP or HP is identical, select a symmetrical capillary length when ordering.
5) Product Configurator, order code for "Additional options 2"

FMD78: Pressure measuring cell fill fluid

Designation	Option [1]
Silicone oil	Standard, if no option was selected.
Inert oil, PWIS-free	HC

1) Product Configurator, order code for "Service"

PMD75: Pressure measuring cell fill fluid

Designation	Option
Silicone oil	Standard, if no option was selected.
Inert oil, FKM Viton, oxygen service	2 [1]
Inert oil, PTFE, oxygen service	3 [1]
Inert oil, copper seal ring, oxygen service	K [1]
Inert oil, PWIS-free	HC [2]
Inert oil, cleaned for oxygen service	HB [2]

1) Product Configurator, order code for "Seal"
2) Product Configurator, oder code for "Service"

Operability

Operating concept

Operator-oriented menu structure for user-specific tasks

- Commissioning
- Operation
- Diagnosis

Fast and safe commissioning

Guided menus for applications

Reliable operation

- Local operation possible in several languages
- Standardized operation at the device and in the operating tools
- Parameters relating to measured values can be locked/unlocked using the device's write protection switch, using the device software or via remote operation

Efficient diagnostics increase measurement availability

- Remedial measures are integrated in plain text
- Diverse simulation options

Local operation

Functions

Function	External operation (operating keys, optional, not T17 housing)	Internal operation (electronic insert)	Onsite display (optional)
Position adjustment (zero point correction)	✔	✔	✔
Setting lower-range value and upper-range value - reference pressure present at the device	✔ (HART only)	✔ (HART only)	✔
Device reset	✔	✔	✔
Locking and unlocking parameters relevant to the measured value	—	✔	✔
Value acceptance indicated by green LED	✔	✔	✔
Switching damping on and off	✔ (only if display is connected)	✔ (HART and PA only)	✔
Configuring the bus address of the device (PA)	—	✔	✔
Switching simulation mode on and off (FOUNDATION Fieldbus)	—	✔	✔

Operating the device using onsite display (optional)

A 4-line liquid crystal display (LCD) is used for display and operation. The onsite display shows measured values, dialog text as well as fault and notice messages in plain text, thereby supporting the user in every stage of operation.

The display can be removed for easy operation.

The device display can be turned in 90° steps.

Depending on the installation position of the device, this makes it easy to operate the device and read the measured value.

Functions:
- 8-digit measured value display including sign and decimal point and bar graph for
  - 4 to 20 mA HART (bar graph from 4 to 20 mA)
  - PROFIBUS PA (bar graph as graphic display of standardized value of AI block)
  - FOUNDATION Fieldbus (bar graph as graphic display of transducer output).
-
- Simple and complete menu guidance due to breakdown of parameters into several levels and groups
- Menu guidance in up to 8 languages
- Each parameter is given a 3-digit ID number for easy navigation.
- Option for configuring the display according to individual requirements and preferences, such as language, alternating display, display of other measured values such as sensor temperature, contrast setting.
- Comprehensive diagnostic functions (fault and warning message, peak-hold indicators, etc.).
- Rapid and safe commissioning with the Quick Setup menus

Overview

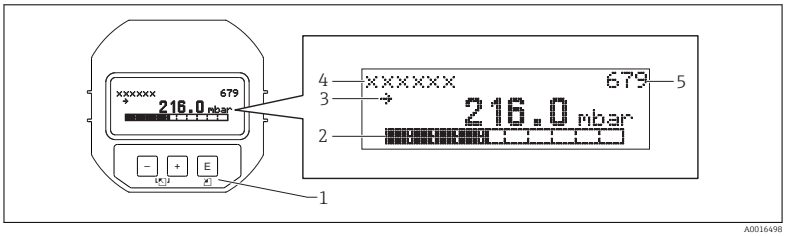

A0016498

1 Operating keys
2 Bargraph
3 Symbol
4 Header
5 Parameter ID number

Operating keys on the exterior of the device

With the aluminum housing (T14), the operating keys are located either outside on the housing, under the protection cap or inside on the electronic insert. With the stainless steel housing (T17), the operating keys are always located inside the housing on the electronic insert.

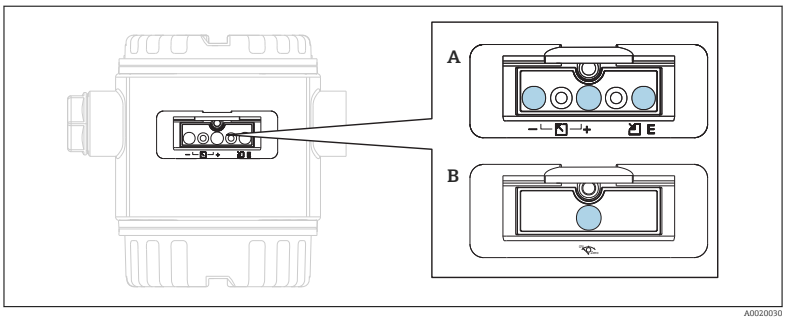

A0020030

A 4 to 20 mA HART
B PROFIBUS PA and FOUNDATION Fieldbus

The operating keys located externally on the device work on the Hall sensor principle. As a result, no additional openings are required in the device. This guarantees:

- Complete protection against environmental influences such as moisture and contamination.
- Simple operation without any tools.
- No wear.

Ordering information:

Product Configurator, order code for "Output, operation"

Operating keys and elements located internally on the electronic insert

Ordering information:

Product Configurator, order code for "Output, operation"

HART

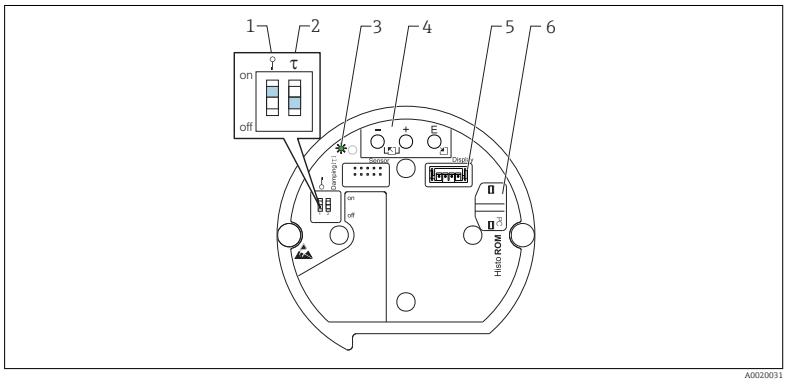

1 *DIP switch for locking/unlocking parameters relevant to the measured value*
2 *DIP switch for switching damping on/off*
3 *Green LED to indicate value being accepted*
4 *Operating keys*
5 *Slot for optional display*
6 *Slot for optional HistoROM®/M-DAT*

PROFIBUS PA

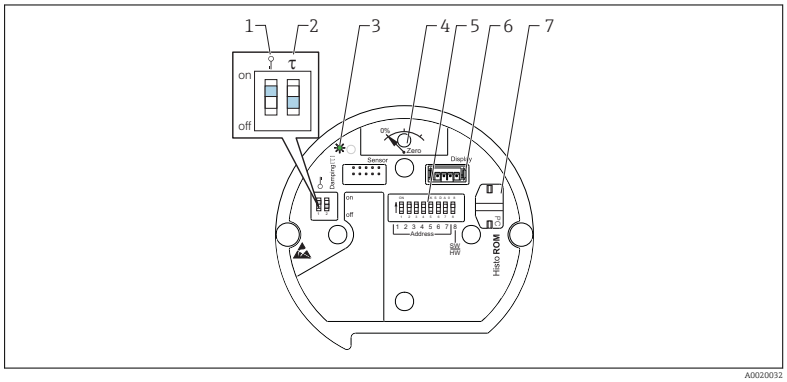

1 *DIP switch for locking/unlocking parameters relevant to the measured value*
2 *DIP switch for switching damping on/off*
3 *Green LED to indicate value being accepted*
4 *Key for position adjustment and device reset*
5 *DIP switch for bus address*
6 *Slot for optional display*
7 *Slot for optional HistoROM®/M-DAT*

FOUNDATION Fieldbus

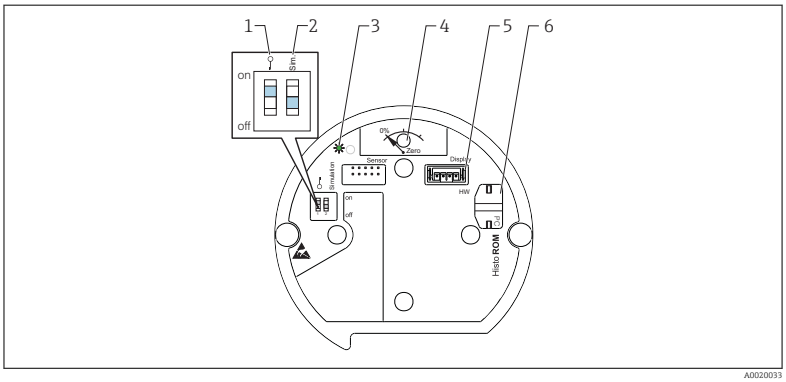

1 *DIP switch for locking/unlocking parameters relevant to the measured value*
2 *DIP switch for simulation mode on/off*
3 *Green LED to indicate value being accepted*
4 *Key for position adjustment and device reset*
5 *Slot for optional display*
6 *Slot for optional HistoROM®/M-DAT*

Remote operation

All software parameters are accessible depending on the position of the write protection switch on the device.

Hardware and software for remote operation	HART	PROFIBUS PA	FOUNDATION Fieldbus
FieldCare	✔	✔	✔
FieldXpert SFX100	✔	–	✔
NI-FBUS Configurator	–	–	✔
HistoROM®/M-DAT	✔	✔	✔

FieldCare

FieldCare is an Endress+Hauser asset management tool based on FDT technology. With FieldCare, you can configure all Endress+Hauser devices as well as devices from other manufacturers that support the FDT standard.

FieldCare supports the following functions:
- Configuration of transmitters in offline and online mode
- Device data upload/download
- HistoROM®/M-DAT analysis
- Documentation of the measuring point

Connection options:
- HART via Commubox FXA195 and the USB interface of a computer
- PROFIBUS PA via segment coupler and PROFIBUS interface card
- Service interface with Commubox FXA291 and ToF adapter FXA291 (USB).

For further information please contact your local Endress+Hauser Sales Center.

Field Xpert SFX100

Field Xpert is an industrial PDA with integrated 3.5" touchscreen from Endress+Hauser based on Windows Mobile. It offers wireless communication via the optional VIATOR Bluetooth modem from Endress+Hauser. Field Xpert also works as a stand-alone device for asset management applications. For details, refer to BA00060S/04/EN.

Commubox FXA195

For intrinsically safe HART communication with FieldCare via the USB interface. For details refer to TI00404F/00/EN.

Commubox FXA291

The Commubox FXA291 connects Endress+Hauser field devices with a CDI interface (=Endress +Hauser Common Data Interface) to the USB interface of a personal computer or a notebook. For details refer to TI00405C/07/EN.

For the following Endress+Hauser devices you need the "ToF adapter FXA291" as an additional accessory:
- Cerabar S PMC71, PMP7x
- Deltabar S PMD7x, FMD7x
- Deltapilot S FMB70

ToF adapter FXA291

The ToF adapter FXA291 connects the Commubox FXA291 with devices of the ToF platform, pressure equipment and Gammapilot via the USB interface of a personal computer or a notebook. For details refer to KA00271F.

Profiboard

For connecting a PC to PROFIBUS.

Proficard

For connecting a laptop to PROFIBUS.

FF configuration program

FF configuration program, such as NI-FBUS Configurator, to
- connect devices with "FOUNDATION Fieldbus signal" into an FF network
- set FF-specific parameters

Remote operation via the NI-FBUS Configurator:

The NI-FBUS Configurator is an easy-to-use graphical environment for creating linkages, field-based control loops and schedules based on the FOUNDATION Fieldbus concept.

You can use the NI-FBUS Configurator to configure a fieldbus network as follows:
- Set block and device tags
- Set device addresses
- Create and edit function block control strategies (function block applications)
- Configure vendor-defined function and transducer blocks
- Create and edit schedules
- Read and write to function block control strategies (function block applications)
- Invoke Device Description (DD) methods
- Display DD menus
- Download a configuration
- Verify a configuration and compare it to a saved configuration
- Monitor a downloaded configuration
- Replace a virtual device by a real device
- Save and print a configuration

HistoROM®/M-DAT (optional)

The HistoROM®/M-DAT is a memory module that can be attached to any electronic insert. HistoROM®/M-DAT can be retrofitted at any stage (order number: 52027785).

Your benefits
- Quick and safe commissioning of the same measuring points by copying the configuration data of one transmitter to another transmitter
- Reliable process monitoring thanks to cyclical recording of pressure and sensor temperature measured values
- Simple diagnosis by recording diverse events such as alarms, configuration changes, counters for measuring range undershoot and overshoot for pressure and temperature as well as user limit overshoot and undershoot for pressure and temperature etc.
- Analysis and graphic evaluation of the events and process parameters via software (contained in scope of supply).

A CD with an Endress+Hauser operating program is also included in the scope of delivery. You can copy data from one transmitter to another transmitter when operating a FOUNDATION Fieldbus device via an FF configuration program. You need the Endress+Hauser FieldCare operating program, the Commubox FXA291 service interface and the ToF adapter FXA291 to be able to access the data and events saved in the HistoROM®/M-DAT.

Ordering information:

Product Configurator, order code for "Additional options:", version "N" or

Product Configurator, order code for "Application package:", option "EN" or

as a separate accessory (part no.: 52027785).

For further information please contact your local Endress+Hauser Sales Center.

System integration

The device can be given a tag name (max. 8 alphanumeric characters).

Designation	Option [1]
Measuring point (TAG), see additional spec.	Z1
Bus address, see additional spec.	Z2

1) Product Configurator, order code for "Identification"

Planning instructions, diaphragm seal systems

NOTICE

Incorrect sizing/ordering of diaphragm seal systems

The performance and the permitted range of application of a diaphragm seal system depend on the process isolating diaphragm used, the filling oil, the coupling, the unit design and on the process and ambient conditions present in the individual application.

- ▶ To help you select the right diaphragm seal systems for your particular applications, Endress +Hauser provides its customers with the "Applicator Sizing Diaphragm Seal" selection tool, which is available free of charge at "www.endress.com/applicator" or as a download.

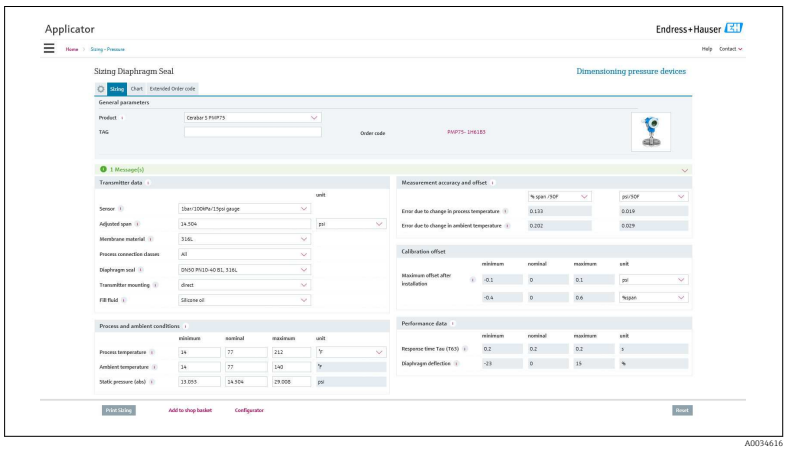

A0034616

For more detailed information or the layout of the optimum diaphragm seal solution for your application, please contact your local Endress+Hauser Sales Center.

Applications

Diaphragm seal systems should be used if the process and the device should be separated.
Diaphragm seal systems offer clear advantages in the following instances:

- In the case of extreme process temperatures
- For aggressive media
- In the case of process media that crystallize
- In the case of corrosive or highly various process media or process media with solids content
- In the case of heterogeneous and fibrous process media
- If extreme measuring point cleaning is necessary, or for very humid mounting locations
- If the measuring point is exposed to severe vibrations
- For mounting locations that are difficult to access

Design and operation mode

Diaphragm seals are separating equipment between the measuring system and the process.

A diaphragm seal system consists of:
- A diaphragm seal in a one-sided system, e.g. FMD77 or two diaphragm seals in a two-sided system, e.g. FMD78
- One capillary tube or two capillary tubes
- Fill fluid
- A differential pressure transmitter

The process pressure acts via the process isolating diaphragm of the diaphragm seal on the liquid-filled system, which transfers the process pressure via the capillary tube onto the sensor of the differential pressure transmitter.

Endress+Hauser delivers all diaphragm seal systems as welded versions. The system is hermetically sealed, which ensures the highest reliability.

The diaphragm seal determines the application range of the system by:
- The diameter of the process isolating diaphragm
- The stiffness and material of the process isolating diaphragm
- The design (oil volume)

Diameter of the process isolating diaphragm

The greater the diameter of the process isolating diaphragm (less stiff), the smaller the temperature effect on the measurement result.

Stiffness of the process isolating diaphragm

The stiffness depends on the diameter of the process isolating diaphragm, the material, any existing coating and the thickness and shape of the process isolating diaphragm. The thickness of the process isolating diaphragm and the shape are determined by the design. The stiffness of a process isolating diaphragm of a diaphragm seal influences the temperature operating range and the measuring error caused by temperature effects.

The Endress+Hauser TempC membrane: Highest accuracy and process safety when measuring pressure and differential pressure using diaphragm seals

To measure even more precisely in such applications and to increase process safety, Endress+Hauser has developed the TempC membrane based on a completely revolutionary technology. This membrane guarantees the highest level of accuracy and process safety in diaphragm seal applications.
- The very low temperature effect minimizes the influence of fluctuations of both process and ambient temperatures, thus guaranteeing accurate and stable measurements. Measurement inaccuracies caused by temperature are reduced to a minimum.
- The TempC membrane can be used at temperatures between −70 °C (−94 °F) and +400 °C (+752 °F). This guarantees maximum process safety even for very long sterilization and cleaning cycles (SIP/CIP) in tanks and pipes at high temperatures.
- Thanks to the TempC membrane, smaller dimension process connections are possible. With a smaller process connection, the new membrane measures at least as accurately as a conventional membrane with a larger diameter.
- Due to the geometry of the membrane, an overshoot occurs initially immediately following a temperature shock. This results in a transient response, the duration and deviation of which are significantly less compared to traditional membrane types. In the case of batch processes, these shorter recovery times mean a far higher level of availability of the production facilities. For TempC membranes, the effect of the overshoot on the output signal can be reduced by adjusting the damping.

Ordering information:

See the Product Configurator for the individual process connection and the choice of process isolating diaphragm.

Selection in the Applicator:

Under "Transmitter data" in the "Membrane material" field.

Capillary

Diaphragm seals are used with the following capillary internal diameters as standard:
- ≤ DN 50: 1 mm (0.04 in)
- > DN 50: 2 mm (0.08 in)

The capillary tube influences the thermal change, the ambient temperature operating range and the response time of a diaphragm seal system as a result of its length and internal diameter.

Filling oil

When selecting the filling oil, the media and ambient temperature as well as the operating pressure are of crucial importance. Observe the temperatures and pressures during commissioning and cleaning. A further selection criterion is the compatibility of the filling oil with the requirements of the process media. For this reason, only filling oils that are harmless to health may be used in the food industry, such as vegetable oil or silicone oil (see also the following section on "diaphragm seal filling oils").

The filling oil used influences the thermal change, the temperature operating range of a diaphragm seal system and the response time. A temperature change results in a volume change of the filling oil. The volume change is dependent on the expansion coefficient and on the volume of the filling oil at calibration temperature (constant in range: +21 to +33 °C (+70 to +91 °F)). The application range can be extended by a filling oil with a lower expansion coefficient and a shorter capillary.

For example, the filling oil expands in the event of a temperature increase. The additional volume presses against the process isolating diaphragm of a diaphragm seal. The stiffer a process isolating diaphragm is, the greater its return force, which counteracts a volume change and acts on the measuring cell together with the operating pressure, thus shifting the zero point.

Differential pressure transmitter

The differential pressure transmitter influences the temperature operating range, the TK zero point and the response time as a result of the volume of its side flange and as a result of its volume change. The volume change is the volume that has to be shifted to pass through the complete measuring range.

Differential pressure transmitters from Endress+Hauser are optimized with regard to the minimum volume change and side flange.

Diaphragm seal filling oils

Filling oil	Permissible temperature range [1] at 0.05 bar (0.725 psi) ≤ p_{abs} ≤ 1 bar (14.5 psi)	Permitted temperature range [1] at p_{abs} ≥1 bar (14.5 psi)	Option [2]
Silicone oil	−40 to +180 °C (−40 to +356 °F)	−40 to +250 °C (−40 to +482 °F)	FMD77: A FMD78: A, 1
High-temperature oil	−10 to +200 °C (+14 to +392 °F)	−10 to +400 °C (+14 to +752 °F) [3] [4] [5]	FMD77: V FMD78: C, 3
Inert oil	−40 to +80 °C (−40 to +176 °F)	−40 to +175 °C (−40 to +347 °F)	FMD77: F FMD78: D, 4
Vegetable oil	−10 to +120 °C (+14 to +248 °F)	−10 to +200 °C (+14 to +392 °F)	FMD77: D FMD78: B, 2
Low-temperature oil	−70 to +80 °C (−94 to +176 °F)	−70 to +180 °C (−94 to +356 °F)	FMD77: L FMD78: E, 5

1) Observe temperature limits of the device and of the system
2) Product Configurator, “Fill fluid” ordering feature
3) 325 °C (617 °F) at ≥1 bar (14.5 psi)absolute pressure.
4) 350 °C (662 °F) at ≥1 bar (14.5 psi) absolute pressure (max. 200 hours).
5) 400 °C (752 °F) at ≥1 bar (14.5 psi) absolute pressure (max. 10 hours).

Additional data:

Filling oil	Density [g/cm3] / [SGU]	Viscosity [mm²/s] / [cSt] at 25 °C (77 °F)	Expansion coefficient [1] [1/K]	Notes [2]	Option [3]
Silicone oil	0.96	100	0.00096	suitable for foods FDA 21 CFR 175.105	FMD77: A FMD78: A, 1
High-temperature oil	1.00	150	0.00096	High temperatures	FMD77: V FMD78: C, 3
Inert oil	1.87	27	0.000876	For ultrapure gas and oxygen applications	FMD77: F FMD78: D, 4
Vegetable oil	0.94	9.5	0.00101	suitable for foods FDA 21 CFR 172.856	FMD77: D FMD78: B, 2
Low-temperature oil	0.92	4.4	0.00108	Low temperatures	FMD77: L FMD78: E, 5

1) The thermal change in the diaphragm seal and other important technical features can be found in the "Applicator Sizing Diaphragm Seal" selection tool.
2) Only select FDA-approved filling oils for diaphragm seal devices with 3-A and EHEDG certification!
3) Product Configurator, “Fill fluid” ordering feature

Operating temperature range

The operating temperature range of a diaphragm seal system depends on the fill fluid, capillary length and internal diameter, process temperature and oil volume of the diaphragm seal.

The application range can be extended by using a filling oil with a smaller expansion coefficient and a shorter capillary.

Response time

The viscosity of the filling oil, the capillary length and the capillary internal diameter influence the frictional resistance. The greater the frictional resistance, the longer the response time. Furthermore, the volume change of the measuring cell influences the response time. The lower the volume change of the measuring cell, the less filling oil has to be shifted in the diaphragm seal system.

To help you select the right diaphragm seal systems for your particular applications, Endress+Hauser provides its customers with the "Applicator Sizing Diaphragm Seal" selection tool, which is available free of charge at "www.endress.com/applicator" or can be ordered on a DVD.

Information on cleaning

Endress+Hauser provides flushing rings as an accessory to enable cleaning of the process isolating diaphragm without removing the transmitter from the process.

For further information please contact your local Endress+Hauser Sales Center.

We recommend you perform CIP (cleaning in place (hot water)) before SIP (sterilization in place (steam)) for pipe diaphragm seals. A frequent use of sterilization in place (SIP) will increase the stress on the process isolating diaphragm. Under unfavorable circumstances in the long term view we cannot exclude that a frequent temperature change could lead to a material fatigue of the process isolating diaphragm and possibly to a leakage.

Installation instructions

Diaphragm seal systems

- The diaphragm seal together with the transmitter form a closed, calibrated system, which is filled through ports in the diaphragm seal and in the measuring system of the transmitter. These ports are sealed and must not be opened.
- In the case of devices with diaphragm seals and capillaries, the zero point shift caused by the hydrostatic pressure of the filling liquid column in the capillaries must be taken into account when selecting the measuring cell. If a measuring cell with a small measuring range is selected, the sensor nominal range can be overdriven as a result of position adjustment (see the figure and the example below).
- For devices with a capillary a suitable fastening device (mounting bracket) is recommended.
- When mounting, sufficient strain relief must be provided for the capillary line to prevent the capillary from bending (capillary bending radius ≥ 100 mm (3.94 in)
- For more detailed installation instructions, Endress+Hauser provides its customers with the free "Applicator Sizing Diaphragm Seal" selection tool, which is available online at "www.endress.com/applicator" or as a download.

Selecting the measuring cell (observe the hydrostatic pressure of the filling liquid column in the capillaries!)

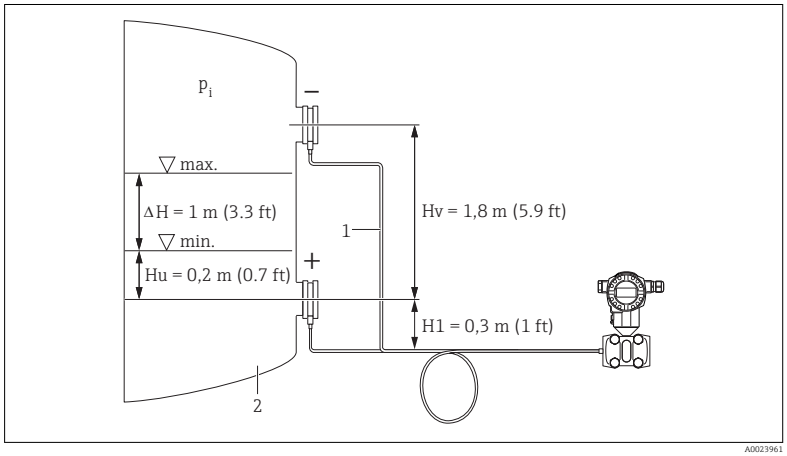

1 *Capillary with silicone oil: ρ_{FI} = 0.96 kg (2.12 lb) dm³*
2 *Vessel with water: ρ_M = 1.0 kg (2.21 lb) dm³*

Pressure on the negative side of the differential pressure transmitter (p−) when the container is empty (minimum level):

$$\begin{aligned} p_{-} &= p_{HV} + p_{H1} = Hv \cdot \rho_{Fl} \cdot g + H1 \cdot \rho_{Fl} \cdot g + p_i \\ &= 1{,}8\ \text{m} \cdot 0{,}96 \frac{\text{kg}}{\text{dm}^3} \cdot 9{,}81 \frac{\text{m}}{\text{s}^2} + 0{,}3\ \text{m} \cdot 0{,}96 \frac{\text{kg}}{\text{dm}^3} \cdot 9{,}81 \frac{\text{m}}{\text{s}^2} + p_i \\ &= 197{,}77\ \text{mbar} + p_i \end{aligned}$$

A0023962

Pressure on the positive side of the differential pressure transmitter (p+) when the container is empty (minimum level):

$$\begin{aligned} p_{+} &= p_{HU} + p_{H1} = Hu \cdot \rho_{M} \cdot g + H1 \cdot \rho_{Fl} \cdot g + p_i \\ &= 0{,}2\ \text{m} \cdot 1 \frac{\text{kg}}{\text{dm}^3} \cdot 9{,}81 \frac{\text{m}}{\text{s}^2} + 0{,}3\ \text{m} \cdot 0{,}96 \frac{\text{kg}}{\text{dm}^3} \cdot 9{,}81 \frac{\text{m}}{\text{s}^2} + p_i \\ &= 47{,}87\ \text{mbar} + p_i \end{aligned}$$

A0023981

Differential pressure at the transmitter ($\Delta p_{transmitter}$) when the container is empty:

$$\begin{aligned} \Delta p_{Transmitter} &= p_{+} - p_{-} \\ &= 47{,}87\ \text{mbar} - 197{,}77\ \text{mbar} \\ &= -149{,}9\ \text{mbar} \end{aligned}$$

A0023982

Result:

When the vessel is full, a differential pressure of −51.80 mbar (−0.762 psi) is present at the differential pressure transmitter. When the vessel is empty, a differential pressure of −149.90 mbar (−2.2485 psi) is present. A 500 mbar (7.5 psi)measuring cell is therefore necessary for this application.

Capillary

In order to obtain more precise measurement results and to avoid a defect in the device, mount the capillaries as follows:
- vibration-free (in order to avoid additional pressure fluctuations)
- not in the vicinity of heating or cooling lines
- insulate if the ambient temperature is below or above the reference temperature
- with a bending radius ≥ 100 mm (3.94 in)
- When using diaphragm seal systems with a capillary, sufficient strain relief must be provided to prevent the capillary from bending (capillary bending radius ≥ 100 mm (3.94 in)).
- In the case of devices with diaphragm seals and capillaries, the zero point shift caused by the hydrostatic pressure of the filling liquid column in the capillaries must be taken into account when selecting the measuring cell. If a measuring cell with a small measuring range is selected, a position adjustment can cause range violation.

Heat insulation – FMD77

The FMD77 must only be insulated up to a certain height. The maximum permitted insulation height applies to an insulation material with a heat conductivity ≤ 0.04 W/(m x K) and to the maximum permitted ambient and process temperature. The data were determined under the most critical application "quiescent air".

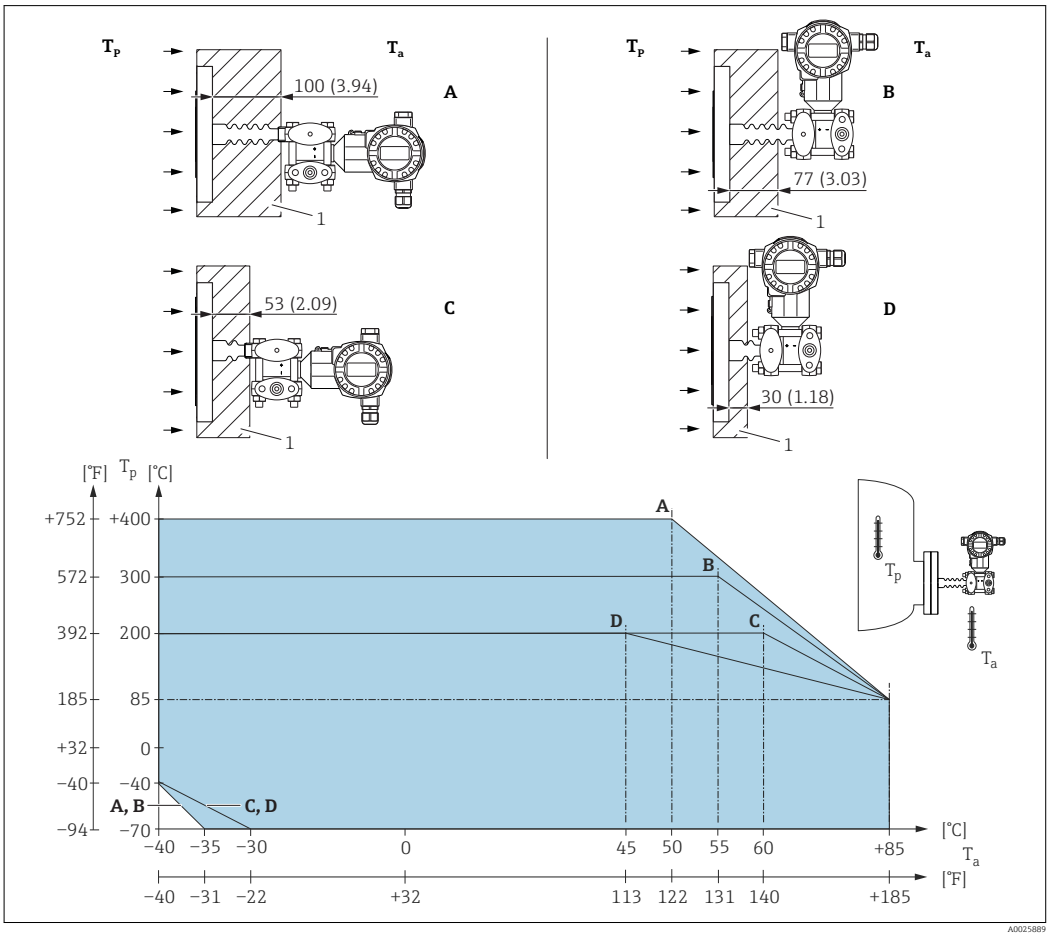

1 Insulation material

Without insulation, the ambient temperature decreases by 5 K.

Position	Design	Temperature isolator	Option [1]
A	Transmitter horizontal	long	MA [2]
B	Transmitter vertical	long	MB
C	Transmitter horizontal	short	MC
D	Transmitter vertical	short	MD

1) Product Configurator, order code for "Design; temperature isolator"
2) Standard

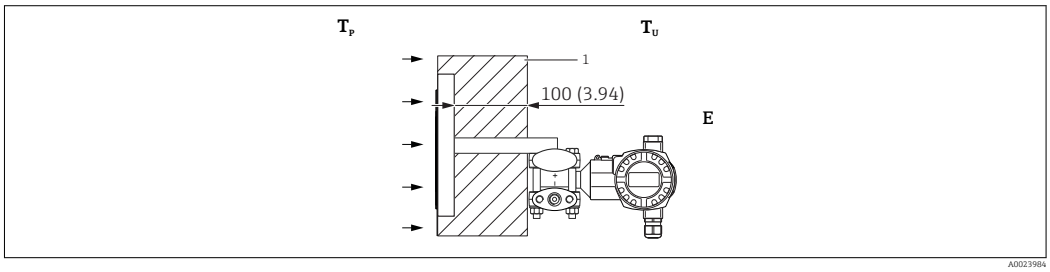

1 Insulation material

Position	Design	Ambient temperature T_U	Process temperature T_P	Option [1]
E	U-bracket, Transmitter horizontal (for devices which require a CRN approval)	≤ 70 °C (158 °F)	max. 350 °C (662 °F)depending on diaphragm seal filling oil used	[2]

1) Product Configurator, "Process connection" ordering feature
2) In combination with CSA approval.

Vacuum applications

Installation instructions

For applications under vacuum, Endress+Hauser recommends mounting the pressure transmitter below the lower diaphragm seal. This prevents a vacuum load of the diaphragm seal caused by the presence of filling oil in the capillaries.

When the pressure transmitter is mounted above the lower diaphragm seal, the maximum height difference H1, in accordance with the following illustrations, must not be exceeded:

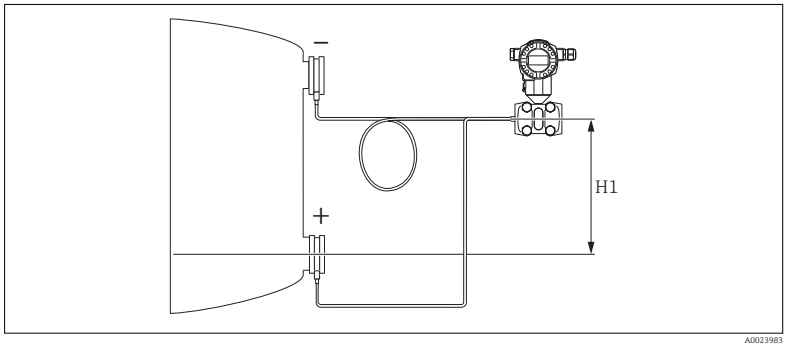

A0023983

The maximum height difference is dependent on the density of the filling oil and the lowest pressure that is ever allowed to occur at the diaphragm seal on the positive side (empty container), see the following illustration:

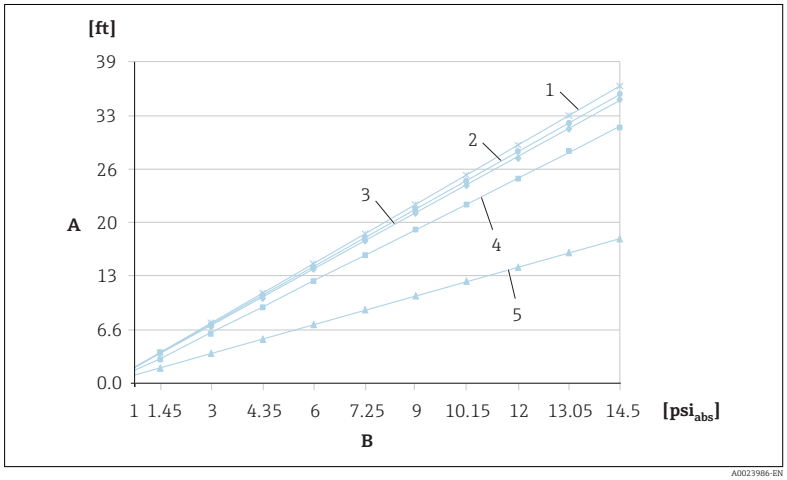

A0023986-EN

A Height difference H1
B Pressure at diaphragm seal
1 Low-temperature oil
2 Vegetable oil
3 Silicone oil
4 High-temperature oil
5 Inert oil

Certificates and approvals

CE mark

The device meets the legal requirements of the relevant EC directives. Endress+Hauser confirms that the device has been successfully tested by applying the CE mark.

RCM-Tick marking

The supplied product or measuring system meets the ACMA (Australian Communications and Media Authority) requirements for network integrity, interoperability, performance characteristics as well as health and safety regulations. Here, especially the regulatory arrangements for electromagnetic compatibility are met. The products are labelled with the RCM- Tick marking on the name plate.

A0029561

Ex approvals

- ATEX
- FM
- CSA
- NEPSI
- IECEx
- GOST on request
- Also combinations of different approvals

All explosion protection data are given in separate documentation which is available upon request. The Ex documentation is supplied as standard with all Ex devices→ 🗎 113.

EAC conformity

The measuring system meets the legal requirements of the applicable EAC guidelines. These are listed in the corresponding EAC Declaration of Conformity together with the standards applied.

Endress+Hauser confirms successful testing of the device by affixing to it the EAC mark.

Suitable for hygiene applications

The device is available with hygienic process connections (overview: see order code). The materials of the hygienic process connections in contact with foodstuffs comply with framework Regulation (EC) 1935/2004.

⚠ CAUTION

Contamination in the process!

Risk of contamination if incorrect seals and parts are used!

- ▶ To avoid the risk of contamination, when installing the device comply with the design principles of EHEDG, Guideline 37 "Hygienic Design and Application of Sensors" and Guideline 16 "Hygienic Pipe Couplings".
- ▶ Suitable assemblies and seals must be used to ensure hygienic design in accordance with 3-A SSI and EHEDG specifications.
- ▶ The leak-proof connections can be cleaned with the cleaning methods typical of this industry (CIP and SIP). Attention must be paid to the pressure and temperature specifications of the sensor and process connections for CIP and SIP processes (clean in place/sterilize in place).
- ▶ For diaphragm seal devices with 3-A and EHEDG certificates, only select filling oils with FDA approval!

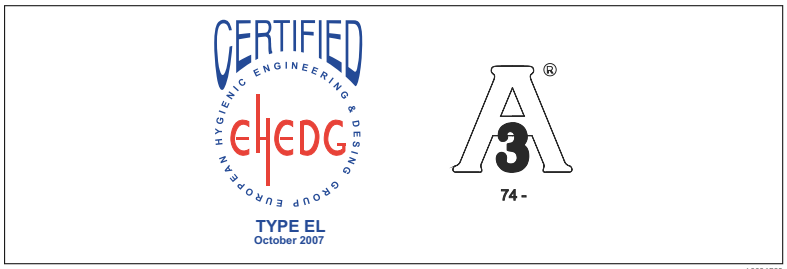

A0026782

The gap-free connections can be cleaned of all residue using the usual cleaning methods within this industry.

Functional safety SIL/ IEC 61508 Declaration of Conformity (optional)	The Deltabar S with 4 to 20 mA output signal has been developed in accordance with the IEC 61508 standard. The device can be used for flow, level and differential pressure monitoring up to SIL 3. For a detailed description of the safety functions with the Deltabar S, settings and functional safety data, see the "Functional safety manual - Deltabar S" SD00189P. For devices up to SIL 3 / IEC 61508 Declarations of Conformity see: Ordering information: Product Configurator, order code for "Additional options 1", version "E"
Overfill protection	WHG (see document ZE00259P/00/EN) Ordering information: Product Configurator, order code for "Approval", option "6".
CRN approval	Some device versions have CRN approval. A CRN-approved process connection with a CSA approval must be ordered for a CRN-approved device. These devices are fitted with a separate nameplate with the registration number CRN 0F10524.5C . Ordering information: Product Configurator, order code for "Process connection; material" and Product Configurator, order code for "Approval" (only in conjunction with an approved process connection)
Other standards and guidelines	The applicable European guidelines and standards can be found in the relevant EU Declarations of Conformity. The following were also applied: **DIN EN 60770 (IEC 60770):** Transmitters for use in industrial-process control systems. Part 1: Methods for operating performance evaluation **DIN 16086:** Electrical pressure measuring instruments, pressure sensors, pressure transmitters, pressure measuring instruments, concepts, specifications on data sheets **EN 61326-X:** EMC product family standard for electrical equipment for measurement, control and laboratory use. **EN 60529:** Degrees of protection provided by enclosures (IP code)
Pressure Equipment Directive 2014/68/EU (PED)	**Pressure equipment with allowable pressure ≤ 200 bar (2 900 psi)** Pressure equipment (having a maximum allowable pressure PS ≤ 200 bar (2 900 psi)) can be classified as pressurized equipment in accordance with Pressure Equipment Directive 2014/68/EU. If the maximum allowable pressure is ≤ 200 bar (2 900 psi) and the pressurized volume of the pressure

equipment is ≤ 0.1 l, the pressure equipment is subject to the Pressure Equipment Directive (cf. Pressure Equipment Directive 2014/68/EU, Article 4, point 3). The Pressure Equipment Directive only requires that the pressure equipment shall be designed and manufactured in accordance with the "sound engineering practice of a Member State".

Reasons:

- Pressure Equipment Directive (PED) 2014/68/EU Article 4, point 3
- Pressure equipment directive 2014/68/EU, Commission's Working Group "Pressure", Guideline A-05 + A-06

Note:

A partial examination shall be performed for pressure instruments that are part of safety equipment for the protection of a pipe or vessel from exceeding allowable limits (equipment with safety function in accordance with Pressure Equipment Directive 2014/68/EU, Article 2, point 4).

Pressure equipment with allowable pressure > 200 bar (2 900 psi)

Pressure equipment designated for application in every process fluid having a pressurized volume of <0.1 l and a max. allowable pressure PS > 200 bar (2 900 psi) shall satisfy the essential safety requirements set out in Annex I of the Pressure Equipment Directive 2014/68/EU. According to Article 13 pressure equipment shall be classified by category in accordance with Annex II. The conformity assessment of the pressure equipment shall be determined by the category I under consideration of the above-mentioned low pressurized volume. These devices shall be provided with CE marking.

Reasons:

- Pressure Equipment Directive 2014/68/EU, Article 13, Annex II
- Pressure equipment directive 2014/68/EU, Commission's Working Group "Pressure", Guideline A-05

Note:

A partial examination shall be performed for pressure instruments that are part of safety equipment for the protection of a pipe or vessel from exceeding allowable limits (equipment with safety function in accordance with Pressure Equipment Directive 2014/68/EU, Article 2, point 4).

The following also applies:

- FMD78 with pipe diaphragm seal ≥ 1.5"/PN40:
  Suitable for stable gases in group 1, category II, module A2
- PMD75, PN 420
  Suitable for stable gases in group 1, category I, module A

Manufacturer declarations

Depending on the desired configuration, the following documents can be ordered additionally with the device:
- FDA conformity
- TSE-free: materials free from animal origin
- Regulation (EC) No. 2023/2006 (GMP)
- Regulation (EC) No. 1935/2004 on materials and articles intended to come into contact with food

Downloading the Declaration of Conformity

http://www.endress.com/en/download

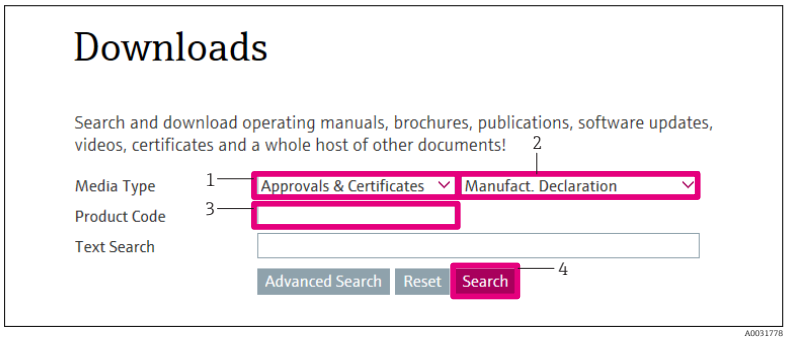

1. Select "Approvals & Certificates"
2. Select "Manufact. Declaration"
3. Enter the required product code
4. Click "Search"

The available downloads are displayed.

Marine approval

- GL: FMD78, PMD75
- ABS: FMD78, PMD75

Ordering information:

Product Configurator, order code for "Additional options 1" or "Additional options 2", version "S".

Classification of process sealing between electrical systems and (flammable or combustible) process fluids in accordance with ANSI/ISA 12.27.01

Endress+Hauser devices are designed in accordance with ANSI/ISA 12.27.01. allowing the user to waive the use and save the cost of installing external secondary process seals in the conduit as required by the process sealing sections of ANSI/NFPA 70 (NEC) and CSA 22.1 (CEC). These instruments comply with the North American installation practice and provide a very safe and cost-saving installation for pressurized applications with hazardous fluids. Please refer to the following table for the seal class assigned (single seal or dual seal):

Device	Approval	Single seal MWP
PMD75	CSA C/US IS, XP	420 bar (6 300 psi)
FMD77	CSA C/US IS, XP	160 bar (2 400 psi)
FMD78	CSA C/US IS, XP	160 bar (2 400 psi)

Further information can be found in the control drawings of the relevant devices.

Inspection certificate

Designation	FMD77	FMD78	PMD75	Option
3.1 Material documentation, wetted metal parts, EN10204-3.1 inspection certificate	✔	✔	✔	B [1) 4)]
Declaration of Conformity NACE MR0175, wetted metal parts	✔	✔	✔	C [1) 4)]
EN10204-3.1 material, NACE MR0175, wetted metal parts, inspection certificate	✔	✔	✔	D [1) 4)]
Individual test, test report	✔	✔	✔	3 [1) 2)]
Pressure test, internal procedure, test report	✔	✔	✔	4 [1) 2)]
EN10204-3.1 material wetted parts +Ra, Ra= surface roughness, dimensional check, inspection certificate	–	✔	–	6 [1) 2)]
Delta-Ferrit measurement, internal procedure, wetted metallic parts, inspection certificate	–	✔	–	8 [1) 2)]
3.1 Material documentation, wetted metal parts, EN10204-3.1 inspection certificate	✔	✔	✔	JA [3) 4)]
Declaration of Conformity NACE MR0175, wetted metal parts	✔	✔	✔	JB [3) 4)]

Designation	FMD77	FMD78	PMD75	Option
Declaration of Conformity NACE MR0103, wetted metal parts	✔	✔	✔	JE [3) 4)]
Helium leak test, internal procedure, inspection certificate	✔	✔	✔	KD [3)]
Pressure test, internal procedure, inspection certificate	✔	✔	✔	KE [3)]
PMI test (XRF), internal procedure, metal parts in contact with the medium	✔	✔	✔	KG [3)]
Welding documentation, wetted/pressurized seams	—	✔	—	KS

1) Product Configurator, order code for "Additional options 1"
2) Product Configurator, order code for "Additional options 2"
3) Product Configurator, order code for "Test, Certificate"
4) The choice of this feature for coated process isolating diaphragms/process connections refers to the metal base material.

Calibration

Designation	FMD77	FMD78	PMD75	Option [1)]
Nominal range; mbar/bar	✔	✔	✔	1
Nominal range; kPa/MPa	✔	✔	✔	2
Nominal range; mmH2O/mH2O	✔	✔	✔	3
Nominal range; inH2O/ftH2O	✔	✔	✔	4
Nominal range; psi	✔	✔	✔	6
Factory calibration certificate, 5-point; see additional specification	✔	✔	✔	C
DKD/DAkkS certificate; see additional specification	✔	✔	✔	D
Customized pressure; see additional specification	✔	✔	✔	E
Customized level; see additional specification	✔	✔	✔	F
Customized flow; see additional specification	–	–	✔	G
Customized pressure + 5-point factory calibration certificate; see additional specification	✔	✔	✔	H
Customized level + 5-point factory calibration certificate; see additional specification	✔	✔	✔	I
Customized flow + 5-point factory calibration certificate; see additional specification	✔	✔	✔	J
Platinum; see additional specification	–	–	✔	K
Platinum + factory calibration certificate 5-point; see additional specification	–	–	✔	L
Platinum + DKD/DAkkS certificate; see additional specification	–	–	✔	M

1) Product Configurator, order code for "Calibration; unit"

Service

Designation	Option [1)]
Cleaned of oil+grease [2)]	HA
Cleaned for oxygen service [2)]	HB
Cleaned of PWIS (paint-wetting impairment substances) [2)]	HC

1) Product Configurator, order code for "Service"
2) Device only, not accessories or enclosed accessories.

Ordering information

Detailed ordering information is available from the following sources:
- In the Product Configurator on the Endress+Hauser website: www.endress.com -> Click "Corporate" -> Select your country -> Click "Products" -> Select the product using the filters and search field -> Open product page -> The "Configure" button to the right of the product image opens the Product Configurator.
- From your Endress+Hauser Sales Center: www.addresses.endress.com

Product Configurator - the tool for individual product configuration
- Up-to-the-minute configuration data
- Depending on the device: Direct input of measuring point-specific information such as measuring range or operating language
- Automatic verification of exclusion criteria
- Automatic creation of the order code and its breakdown in PDF or Excel output format
- Ability to order directly from the Endress+Hauser Online Shop

Scope of delivery
- Measuring device
- Optional accessories
- Brief Operating Instructions
- Certificates of calibration
- Optional certificates

Measuring point (TAG)

Ordering feature	895: Marking
Option	Z1: Tagging (TAG), see additional spec.
Position of the measuring point marking	To be selected in the additional specifications: ▪ Tag plate Stainless Steel ▪ Self-adhesive paper label ▪ Supplied label/plate ▪ RFID TAG ▪ RFID TAG + Tag plate Stainless Steel ▪ RFID TAG + Self-adhesive paper label ▪ RFID TAG + Supplied label/plate
Definition of the measuring point designation	To be defined in the additional specifications: 3 lines containing up to 18 characters each The measuring point designation appears on the selected label and/or the RFID TAG.
Identification on electronic nameplate (ENP)	32 characters

Configuration data sheet

Pressure

The following configuration data sheet must be completed and included with the order if the option "E" or "H" has been selected in the Product Configurator, order code for "Calibration; Unit".

Pressure unit

❑ mbar	❑ mmH_2O [1]	❑ mmHg [2]	❑ Pascal	❑ torr
❑ bar	❑ mH_2O [1]	❑ inHg [2]	❑ hPa	❑ g/cm^2
❑ psi	❑ ftH_2O [1]	❑ gf/cm^2	❑ kPa	❑ kg/cm^2
	❑ inH_2O [1]	❑ kgf/cm^2	❑ MPa	❑ lb/ft^2
				❑ atm

1) The conversion factor for the pressure unit is based on a reference temperature of 4 °C (39.2 °F).
2) The conversion factor of the pressure unit refers to a reference temperature of 0 °C (32 °F).

Calibration range / Output

Lower range value (LRV): _____ [pressure unit]
Upper range value (URV): _____ [pressure unit]

Display

Display of the content of the main line (option depends on sensor and communication variant)

- ❑ Primary value [PV] (default)
- ❑ Primary value [%]
- ❑ Pressure
- ❑ Current [mA] (HART only)
- ❑ Temperature
- ❑ Error number
- ❑ Alternating display

Damping

Damping: _____ sec (Default 2 sec)

Smallest span (factory calibration) → 🗎 12

Level

The following configuration data sheet must be completed and included with the order if the option "F" or "T" has been selected in the Product Configurator, order code for "Calibration; Unit".

Pressure unit					Output unit (scaled unit)				
					Mass	Lengths	Volume	Volume	Percent
❑ mbar	❑ mmH_2O [1]	❑ mmHg [2]	❑ Pascal	❑ torr	❑ kg	❑ m	❑ l	❑ USgal	❑ %
❑ bar	❑ mH_2O [1]	❑ inHg [2]	❑ hPa	❑ g/cm^2	❑ t	❑ dm	❑ hl	❑ impgal	
❑ psi	❑ ftH_2O [1]	❑ gf/cm^2	❑ kPa	❑ kg/cm^2	❑ lb	❑ cm	❑ m^3	❑ USbblPE TR	
	❑ inH_2O [1]	❑ kgf/cm^2	❑ MPa	❑ lb/ft^2		❑ mm	❑ ft^3		
				❑ atm		❑ ft			
						❑ inch			

Empty calibration [a]: Low pressure value (empty) _____ [pressure unit]

Empty calibration [a]: Low measured value (empty) _____ [Scaled unit]

Full calibration [b]: High pressure value (full) _____ [pressure unit]

Full calibration [b]: High level value (full) _____ [Scaled unit]

Example

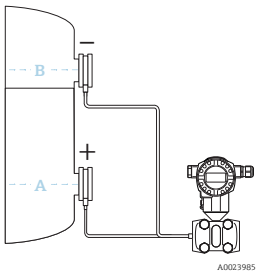

A *500 mbar (7.25 psi) / 100 m^3*
B *50 mbar (1 psi) / 3 m^3*

1) The conversion factor for the pressure unit is based on a reference temperature of 4 °C (39.2 °F).
2) The conversion factor of the pressure unit refers to a reference temperature of 0 °C (32 °F).

Display

Display of the content of the main line (option depends on sensor and communication variant)

- ❑ Primary value [PV] (default)
- ❑ Primary value [%]
- ❑ Pressure
- ❑ Current [mA] (HART only)
- ❑ Temperature
- ❑ Level before lin.
- ❑ Tank content
- ❑ Error number
- ❑ Alternating display

Damping

Damping: _____ sec (Default 2 sec)

Flow

The following configuration data sheet must be completed and included with the order if the option "G" or the option "J" has been selected in the Product Configurator for the "Calibration; Unit" order code.

Pressure unit				
❑ mbar	❑ mmH_2O [1]	❑ mmHg [2]	❑ Pascal	❑ torr
❑ bar	❑ mH_2O	❑ inHg	❑ hPa	❑ g/cm^2
❑ psi	❑ ftH_2O	❑ gf/cm^2	❑ kPa	❑ kg/cm^2
	❑ inH_2O	❑ kgf/cm^2	❑ MPa	❑ lb/ft^2
				❑ atm

Flow Unit / Measured Value (PV)			
Mass	Volume Operating conditions	Volume Standard conditions	Volume Standard Condition
❑ kg/s	❑ m^3/s	❑ Nm^3/s	❑ Sm^3/s
❑ kg/min	❑ m^3/min	❑ Nm^3/m	❑ Sm^3/min
❑ kg/h	❑ m^3/h	❑ in	❑ Sm^3/h
❑ t/s	❑ l/s	❑ Nm^3/h	❑ Sm^3/d
❑ t/min	❑ l/min	❑ Nm^3/d	❑ Scf/s
❑ t/h	❑ l/h		❑ Scf/min
❑ oz/s	❑ US Gal/s		❑ Scf/h
❑ oz/min	❑ US Gal/min		❑ Scf/d
❑ lb/s	❑ US Gal/h		
❑ lb/min	❑ ACFS		
❑ lb/h	❑ ACFM		
	❑ ACFH		

1) The conversion factor for the pressure unit is based on a reference temperature of 4 °C (39.2 °F).
2) The conversion factor of the pressure unit refers to a reference temperature of 0 °C (32 °F).

Output Characteristic

❑ linear (HART only)
Operating point

Maximum pressure _____ [pressure unit]

Maximum flow rate _____ [flow unit]

LRV _____ [pressure unit]

(Lower Range Value (HART only))

❑ quadratic (HART only)
Operating point

Maximum pressure _____ [pressure unit]

Maximum flow rate _____ [flow unit]

LRV _____ [pressure unit]

(Lower Range Value (HART only))

Low flow cut off

Value: _____ [%] (default = 5%)

Display

Display of the content of the main line (option depends on sensor and communication variant)

❑ Primary value [PV] (default)
❑ Primary value [%]
❑ Pressure
❑ Current [mA] (HART only)
❑ Temperature
❑ Flow
❑ Totalizer 1
❑ Totalizer 2
❑ Error number
❑ Alternating display

Damping

Damping: _____ sec (Default 2 sec)

Accessories

HistoROM®/M-DAT	The HistoROM®/M-DAT is a memory module that can be attached to any electronic insert. Ordering information: Product Configurator, order code for "Additional options 1" or Additional options 2", version "N" or as a separate accessory (part no.: 52027785).
Welding flanges and welding neck	For details, refer to TI00426F/00/EN "Weld-in adapters, process adapters and flanges".
Manifolds	See → 🗎 54. For further details, see SD01553P/00/EN "Mechanical accessories for pressure measuring devices".
Additional mechanical accessories	Oval flange adapters, pressure gauge valves, shutoff valves, siphons, condensate pots, cable shortening kits, adapter test, flushing rings, block&bleed valves, protective roofs. For details see SD01553P/00/EN "Mechanical accessories for pressure measuring devices".

Supplementary documentation

Field of Activities	Pressure measurement, powerful instruments for process pressure, differential pressure, level and flow: FA00004P/00/EN
Technical Information	▪ Cerabar S: TI00383P/00/EN ▪ Deltapilot S: TI00416P/00/EN ▪ EMC test procedures: TI00241F/00/EN ▪ Weld-in adapters, process adapters and flanges: TI00426F/00/EN
Special Documentation	Mechanical accessories for pressure measuring devices: SD01553P/00/EN
Operating Instructions	4 to 20 mA HART: ▪ Deltabar S: BA00270P/00/EN ▪ Description of device functions Cerabar S/Deltabar S/Deltapilot S: BA00274P/00/EN PROFIBUS PA: ▪ Deltabar S: BA00294P/00/EN ▪ Description of device functions Cerabar S/Deltabar S/Deltapilot S: BA00296P/00/EN FOUNDATION Fieldbus: ▪ Deltabar S: BA00301P/00/EN ▪ Description of device functions Cerabar S/Deltabar S/Deltapilot S: BA00303P/00/EN
Brief Operating Instructions	▪ 4 to 20 mA HART, Deltabar S: KA01018P/00/EN ▪ PROFIBUS PA, Deltabar S: KA01021P/00/EN ▪ FOUNDATION Fieldbus, Deltabar S: KA01024P/00/EN
Functional safety manual (SIL)	Deltabar S (4 to 20 mA): SD00189P/00/EN
Overfill protection	WHG: ZE00259P/00/DE
Safety Instructions (XA)	Depending on the approval, the following Safety Instructions (XA) are supplied with the device. They are an integral part of the Operating Instructions.

Directive	Electronic insert	Documentation	Option [1)]
ATEX II 1/2G Ex ia IIC T6 Ga/Gb (WHG)	4 to 20 mA HART, PROFIBUS PA, FOUNDATION Fieldbus	XA00235P	1 (6)
ATEX II 1/2D Ex ta/tb IIIC Da/Db	4 to 20 mA HART	XA00237P	2
	PROFIBUS PA, FOUNDATION Fieldbus	XA00280P	
ATEX II 1/3D Ex ta IIIC Da/Dc	4 to 20 mA HART	XA00239P	4
	PROFIBUS PA, FOUNDATION Fieldbus	XA00282P	
ATEX II 2 G Ex d IIC T6 Gb	4 to 20 mA HART, PROFIBUS PA, FOUNDATION Fieldbus	XA00240P	5
ATEX II 3 G Ex nA II T6	4 to 20 mA HART, PROFIBUS PA, FOUNDATION Fieldbus	XA00241P	7
ATEX II 1/2G Ex ia IIC T6 Ga/Gb + ATEX II 1/2D Ex ia IIIC Da/Db	4 to 20 mA HART, PROFIBUS PA, FOUNDATION Fieldbus	XA00243P	3
ATEX II 1G Ex ia + II 1D Ex iaD	4 to 20 mA HART, PROFIBUS PA, FOUNDATION Fieldbus	XA00275P	8
ATEX II 1/2G Ex ia IIC T6+II 2G Ex d IIC T6	4 to 20 mA HART, PROFIBUS PA, FOUNDATION Fieldbus	XA00242P	B
ATEX II Ex ia/Ex d + FM/CSA IS + XP ATEX II 1/2G Ex ia IIC T6+ ATEX II 2G Ex d IIC T6+FM/CSA IS + XP Cl.I.II Div.1 Gr.A-G/B-GFM/CSA: Zone 1,2	4 to 20 mA HART	XA00242P ZD00153P XA01196P	F

Directive	Electronic insert	Documentation	Option [1]
	PROFIBUS PA, FOUNDATION Fieldbus	XA00242P XA01198P ZD00191P	
IECEx Ex ia IIC T6 Ga/Gb	4 to 20 mA HART, PROFIBUS PA, FOUNDATION Fieldbus	XB00004P	I
IEC Ex d IIC T6 Gb	4 to 20 mA HART, PROFIBUS PA, FOUNDATION Fieldbus	XA00512P	M
NEPSI Ex ia IIC T6	4 to 20 mA HART, PROFIBUS PA, FOUNDATION Fieldbus	XA00550P	H
NEPSI Ex d IIC T6	4 to 20 mA HART, PROFIBUS PA, FOUNDATION Fieldbus	XA00552P	G

1) Product Configurator, order code for "Approval"

Directive	Electronic insert	Documentation	Option [1]
TIIS Ex do IIC T6	4 to 20 mA HART	TC18007 TC18008	L

1) Product Configurator, order code for "Approval"

Directive	Electronic insert	Documentation	Option [1]
INMETRO Ex ia IIC T6 Ga/Gb	4 to 20 mA HART, PROFIBUS PA, FOUNDATION Fieldbus	XA01318P	J
INMETRO Ex d IIC T6 Gb	4 to 20 mA HART, PROFIBUS PA, FOUNDATION Fieldbus	XA01281P	O
INMETRO Ex ta IIIC Da/Db	4 to 20 mA HART, PROFIBUS PA, FOUNDATION Fieldbus	XA01316P	Z

1) Product Configurator, order code for "Approval"

Installation/Control Drawings

Directive	Electronic insert	Documentation	Option [1]
FM IS Cl.I,II,III Div.1 Gr.A-G, NI Cl.I Div.2 Gr.A-D, AEx ia, Zone 0,1,2,20,21,22	4 to 20 mA HART	XA01058P	S
	PROFIBUS PA, FOUNDATION Fieldbus	XA01060P	
FM/CSA IS + XP Cl.I Div.1 Gr.A-D, FM/CSA: Zone 1,2	4 to 20 mA HART	XA00591P XA01196P	Q
	PROFIBUS PA, FOUNDATION Fieldbus	XA00590P XA01198P	
FM DIP Cl.II,III Div.1 Gr.E-G, Zone 21,22	4 to 20 mA HART, PROFIBUS PA, FOUNDATION Fieldbus	FM3017778	Q
CSA C/US IS Cl.I,II,III Div.1 Gr.A-G, Cl.I Div.2 Gr.A-D, Ex ia, C: Zone 0,1,2/ US: Zone 0,1,2,20,21,22	4 to 20 mA HART	ZD00142P	U
	PROFIBUS PA, FOUNDATION Fieldbus	ZD00189P	
FM IS + XP Cl.I Div.1 Gr.A-D, Zone 1,2	4 to 20 mA HART	XA01196P	C
	PROFIBUS PA, FOUNDATION Fieldbus	XA01198P	
FM NI Cl.I Div.2 Gr.A-D, Zone 2	4 to 20 mA HART, PROFIBUS PA, FOUNDATION Fieldbus	XA01064P	R
FM XP Cl.I Div.1 Gr.A-D, AEx d, Zone 1,2	4 to 20 mA HART, PROFIBUS PA, FOUNDATION Fieldbus	XA01071P	T
CSA C/US IS + XP Cl.I Div.1 Gr.A-D, Zone 1,2	4 to 20 mA HART	ZD00153P	D
	PROFIBUS PA, FOUNDATION Fieldbus	ZD00191P	
ATEX II Ex ia/Ex d + FM/CSA IS + XP ATEX II 1/2G Ex ia IIC T6+ ATEX II 2G Ex d IIC T6+FM/CSA IS + XP Cl.I.II Div.1 Gr.A-G/B-GFM/CSA: Zone 1,2	4 to 20 mA HART	XA00242P ZD00153P XA01196P	F

Directive	Electronic insert	Documentation	Option [1]
	PROFIBUS PA, FOUNDATION Fieldbus	XA00242P XA01198P ZD00191P	
CSA C/US XP Cl.I Div.1 Gr.B-D, Ex d, Zone 1,2	4 to 20 mA HART, PROFIBUS PA, FOUNDATION Fieldbus	ZD00229P	V
CSA C/US Cl.II, III Div.1 Gr.E-G	4 to 20 mA HART, PROFIBUS PA, FOUNDATION Fieldbus	CSA1509834	W
CSA C/US General Purpose	4 to 20 mA HART, PROFIBUS PA, FOUNDATION Fieldbus	-	Z

1) Product Configurator, order code for "Approval"

71374973

www.addresses.endress.com

Endress+Hauser
People for Process Automation

A.9.2 Declaration of Conformity

EU-Konformitätserklärung
EU-Declaration of Conformity
Déclaration UE de Conformité

Endress+Hauser
People for Process Automation

CE

Company **Endress+Hauser SE+Co. KG, Hauptstraße 1, 79689 Maulburg**
erklärt als Hersteller in alleiniger Verantwortung, dass das Produkt
declares as manufacturer under sole responsibility, that the product
déclare sous sa seule responsabilité en qualité de fabricant que le produit

Product **DELTABAR S**
PMD75, FMD77, FMD78

Regulations den folgenden Europäischen Richtlinien entspricht:
conforms to following European Directives:
est conforme aux prescriptions des Directives Européennes suivantes :

ATEX	2014/34/EU (L96/309)
EMC	2014/30/EU (L96/79)
RoHS	2011/65/EU (L174/88)

Standards angewandte harmonisierte Normen oder normative Dokumente:
applied harmonized standards or normative documents:
normes harmonisées ou documents normatifs appliqués :

EN 50581	(2012)	EN 60079-0+A11(2013)	(2012)	EN 60079-31	(2014)
EN 61010-1	(2010)	EN 60079-11	(2012)		
EN 61326-1	(2013)	EN 60079-26	(2015)		
EN 61326-2-3	(2013)				
EN 61326-2-5	(2013)				

Certification EG-Baumusterprüfbescheinigung Nr. KEMA 03 ATEX 1561
EC-Type Examination Certificate No.
Numéro de l'attestation d'examen CE de typ

Ausgestellt von/issued by/délivré par DEKRA Certification B.V. (0344)
Qualitätssicherung TÜV Nord CERT (GmbH) (0044)
Quality assurance
Système d'assurance qualité

Maulburg, 03.08.2018
Endress+Hauser SE+Co. KG

i.V. Dr. Arno Götz
Abteilungsleiter Produktsicherheit
Department Manager Product Safety
Responsable de certification

EG 03 034 _g

A.9.3 Certificate

CERTIFICATE

(1) **EU-Type Examination**

(2) **Equipment or protective systems intended for use in potentially explosive atmospheres - Directive 2014/34/EU**

(3) EU-Type Examination Certificate Number: **KEMA 03ATEX1561** Issue Number: **5**

(4) Product: **Pressure transmitter**
CERABAR-S Types PMP71, PMP75 and PMC71 and
DELTAPILOT-S Type FMB70 and
Differential pressure transmitter
DELTABAR-S Types PMD75, FMD77 and FMD78

(5) Manufacturer: **Endress+Hauser GmbH+Co. KG**

(6) Address: **Hauptstraße 1, 79689 Maulburg, Germany**

(7) This product and any acceptable variation thereto is specified in the schedule to this certificate and the documents therein referred to.

(8) DEKRA Certification B.V., Notified Body number 0344 in accordance with Article 17 of Directive 2014/34/EU of the European Parliament and of the Council, dated 26 February 2014, certifies that this product has been found to comply with the Essential Health and Safety Requirements relating to the design and construction of products intended for use in potentially explosive atmospheres given in Annex II to the Directive.

The examination and test results are recorded in confidential test report number NL/KEM/ExTR06.0005/05.

(9) Compliance with the Essential Health and Safety Requirements has been assured by compliance with:

EN 60079-0 : 2012 + A11 : 2013 **EN 60079-11 : 2012** **EN 60079-26 : 2015** **EN 60079-31 : 2014**

except in respect of those requirements listed at item 18 of the Schedule.

(10) If the sign "X" is placed after the certificate number, it indicates that the product is subject to the Specific Conditions of Use specified in the schedule to this certificate.

(11) This EU-Type Examination Certificate relates only to the design and construction of the specified product. Further requirements of the Directive apply to the manufacturing process and supply of this product. These are not covered by this certificate.

(12) The marking of the product shall include the following:

II 1/2 G	**Ex ia IIC T6 ... T2 Ga/Gb** or
II 2 G	**Ex ia IIC T6 ... T2 Gb** and/or
II 1 D	**Ex ia IIIC T85 °C Da**
II 1/2 D	**Ex ia IIIC T85 °C Da/Db** or
	Ex ta/tb IIIC T85 °C Da/Db or
II 1/3 D	**Ex ta/tc IIIC T85 °C Da/Dc**

Date of certification: 16 February 2017

DEKRA Certification B.V.

R. Schuller
Certification Manager

Page 1/4

© Integral publication of this certificate and adjoining reports is allowed. This Certificate may only be reproduced in its entirety and without any change.

DEKRA Certification B.V. Meander 1051, 6825 MJ Arnhem P.O. Box 5185, 6802 ED Arnhem The Netherlands
T +31 88 96 83000 F +31 88 96 83100 www.dekra-certification.com Registered Arnhem 09085396

(13) **SCHEDULE**

(14) **to EU-Type Examination Certificate KEMA 03ATEX1561** Issue No. **5**

(15) **Description**

Pressure transmitters CERABAR-S Types PMP71, PMP75 and PMC71 and DELTAPILOT-S Type FMB70 and Differential pressure transmitters DELTABAR-S Types PMD75, FMD77 and FMD78 are used in potentially explosive atmospheres for the measurement of level, flow, differential pressure, over- and under pressure.

Depending on the electronics insert the output of the Pressure or Differential Pressure Transmitter is a
4 - 20 mA current output signal with a superimposed HART digital signal, or the transmitter is connected to a Fieldbus system for the supply and the communication.

The several versions of the Pressure Transmitters differ in type of sensor, type of electronics insert, type of enclosure, process connection etc.

Optionally all versions of the Pressure and Differential Pressure Transmitters may be provided with an indicator and/or overvoltage protection.

A certified intrinsically safe device may be connected to the display interface of all versions for service purposes.

Optionally all intrinsically safe versions of the Pressure and Differential Pressure Transmitters may be provided with an extended sensor cable.

The enclosure of the apparatus provides a degree of protection of at least IP66 and IP67 in accordance with EN 60529.

Thermal data

Ambient temperature range -50 ºC to +70 ºC.

Transmitters of equipment protection level Ga/Gb and Gb

The relation between the temperature class, the ambient temperature and the process temperature is given in the following table:

Temperature class	Ambient temperature	Process temperature
T6	≤ 40 °C	≤ 80 °C
T4	≤ 70 °C	≤ 120 °C
T3	≤ 70 °C	≤ 180 °C
T2	≤ 70 °C	≤ 280 °C

The maximum allowed process temperature for the different types of Pressure Transmitters and Differential Pressure Transmitters is listed in the relevant equipment manuals.

Transmitters of equipment protection level Da, Db and Dc

The maximum surface temperature of the enclosure T85 °C is based on the maximum ambient temperature of 70 °C with a dust layer up to 5 mm.

DEKRA

(13) **SCHEDULE**

(14) **to EU-Type Examination Certificate KEMA 03ATEX1561** Issue No. **5**

Electrical data

Equipment in type of protection intrinsic safety "i"

Transmitters with electronics insert 4 - 20 mA HART or 4 - 20 mA HART (SIL version)

Supply and output circuit (Terminals + and – or connector):
in type of protection intrinsic safety Ex ia IIC and Ex ia IIIC, only for connection to a certified intrinsically safe circuit, with the following maximum values:
U_i = 30 V; I_i = 300 mA; P_i = 1 W; L_i = 225 µH; C_i = 11,8 nF (output options A, B and C);
U_i = 30 V; I_i = 300 mA; P_i = 1 W; L_i = negligible; C_i = 11,8 nF (output options D, E and F).

Transmitters with electronics insert Profibus PA or Foundation Fieldbus

Supply and output circuit (terminals 1 and 2):
in type of protection intrinsic safety Ex ia IIC and Ex ia IIIC, only for connection to a certified intrinsically safe Fieldbus system, e.g. according to FISCO, with the following maximum values:
U_i = 17,5 V; I_i = 500 mA; P_i = 5,5 W; L_i = 10 µH; C_i = 5 nF;
or
in type of protection intrinsic safety Ex ia IIC and Ex ia IIIC, only for connection to a certified intrinsically safe circuit, with following maximum values:
U_i = 24 V; I_i = 250 mA; P_i = 1,2 W; L_i = 10 µH; C_i = 5 nF.

Equipment in type of protection dust ignition protection by enclosure "t"

Transmitters with electronics insert 4 - 20 mA HART or 4 - 20 mA HART (SIL version)

Supply and output circuit (Terminals + and – or connector):
U ≤ 45 Vdc

Transmitters with electronics insert Profibus PA or Foundation Fieldbus

Supply and output circuit (Terminals 1 and 2):
U ≤ 32 Vdc

Installation instructions

The instructions provided with the product shall be followed in detail to assure safe operation.

(16) **Report Number**

No. NL/KEM/ExTR06.0005/05.

(17) **Specific conditions of use**

None.

(18) **Essential Health and Safety Requirements**

Covered by the standards listed at item (9).

(13) **SCHEDULE**

(14) **to EU-Type Examination Certificate KEMA 03ATEX1561** Issue No. **5**

(19) **Test documentation**

As listed in Report No. NL/KEM/ExTR06.0005/05.

(20) **Certificate history**

Issue 1	-	202787200	initial certificate
Issue 2	-	210773200	constructional changes
Issue 3	-	211500500	constructional changes and standards
Issue 4	-	215686600	constructional changes and standards upgrade
Issue 5	-	219596300	constructional changes and standards upgrade

Form 227A
Version 1 (2016-04)

A.9.4 Functional desription

BA00274P/00/EN/18.16
71336359

valid from Software version:
02.30.zz

Products Solutions Services

Description of Instrument Functions
Cerabar S PMC71, PMP71, PMP75
Deltabar S FMD77 / 78, PMD75
Deltapilot S FMB70

Process pressure / Differential pressure, Flow / Hydrostatic

HART COMMUNICATION PROTOCOL

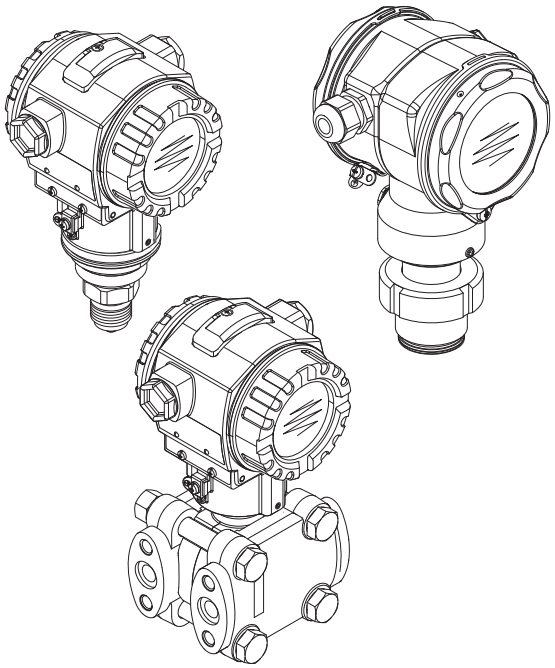

Endress+Hauser
People for Process Automation

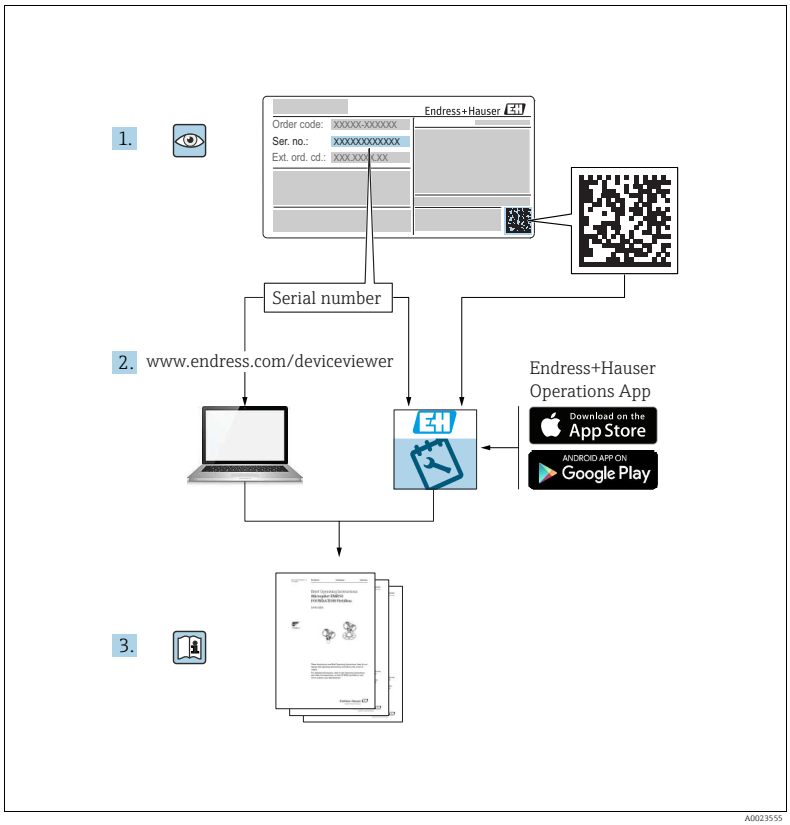

A0023555

Make sure the document is stored in a safe place such that it is always available when working on or with the device.
To avoid danger to individuals or the facility, read the "Basic safety instructions" section carefully, as well as all other safety instructions in the document that are specific to working procedures.
The manufacturer reserves the right to modify technical data without prior notice. Your Endress+Hauser Sales Center will supply you with current information and updates to these Instructions.

Table of contents

1 Document information 4

1.1 Symbols used 4

2 Basic safety instructions 4

3 Notes on use 4

4 Pressure measurement 5

4.1 Calibration with reference pressure 5
4.2 Calibration without reference pressure 6

5 Level measurement 8

5.1 Overview of level measurement 8
5.2 "Level Easy Pressure" level selection 9
5.3 "Level Easy Height" level selection 13
5.4 "Level Standard" level selection, "Linear" level type 17
5.5 "Level Standard" level selection, "Pressure Linearized" level type 21
5.6 "Level Standard" level selection, "Height Linearized" level type 26

6 Flow measurement 33

6.1 Calibration 33
6.2 Totalizers 35

7 On-site display operating menu 36

8 FieldCare operating menu 43

9 Description of parameters 62

10 Troubleshooting 131

10.1 Messages 131
10.2 Response of outputs to errors 140
10.3 Confirming messages 141

Index 142

1 Document information

1.1 Symbols used

1.1.1 Safety symbols

Symbol	Meaning
DANGER A0011189-DE	**DANGER!** This symbol alerts you to a dangerous situation. Failure to avoid this situation will result in seriousor fatal injury.
WARNING A0011190-DE	**WARNING!** This symbol alerts you to a dangerous situation. Failure to avoid this situation can result in seriousor fatal injury.
CAUTION A0011191-DE	**CAUTION!** This symbol alerts you to a dangerous situation. Failure to avoid this situation can result in minoror medium injury.
NOTICE A0011192-DE	**NOTICE!** This symbol contains information on procedures and other facts which do not result in personalinjury.

1.1.2 Symbols for certain types of information

Symbol	Meaning
A0011193	**Tip** Indicates additional information.

2 Basic safety instructions

Siehe Betriebsanleitung:
Deltabar S BA00270P
Cerabar S BA00271P
Deltapilot S BA00332P

3 Notes on use

Typical examples of configuration	see chapter 4 to 6
Operating menu of the on-site display	see Chapter 7
FieldCare operating menu	see Chapter 8
Parameter description	see Chapter 9
Finding parameter description using parameter names (index)	see Page 142

4 Pressure measurement

4.1 Calibration with reference pressure

Example:
In this example, a device with a 500 mbar (7.5 psi) sensor is configured for the 0...+300 mbar (4.5 psi)measuring range, i.e. 0 mbar and 300 mbar (4.5 psi) are assigned to the 4 mA value and 20 mA value respectively.

Prerequisite:
- The pressure values 0 mbar and 300 mbar (4.5 psi) can be specified. The device is already installed, for example.
- See also Operating Instructions Deltabar S (BA00270P), Section "Differential pressure measurement", Cerabar S (BA00271P), Section "Pressure measurement" or Deltapilot S (BA00332P), Section "Pressure measurement".
- For a description of the parameters mentioned, see
  - Page 62, Table 2: MEASURING MODE
  - Page 68, Table 6: POSITION ADJUSTMENT
  - Page 69, Table 7: BASIC SETUP.
- For a description of further relevant parameters, see
  - Page 100, Table 15: EXTENDED SETUP
  - Page 120, Table 25: PROCESS VALUES.

⚠ WARNING
Changing the measuring mode can affect the adjustment data!
This situation can result in product overflow.
▶ Check calibration data when the measuring mode is changed.

	Description
1	Deltabar S: before configuring the device for your application, the pressure piping must be cleaned and filled with fluid. See Operating Instructions BA00270P.
2	Carry out position adjustment if necessary. See Page 68, Table 6: POSITION ADJUSTMENT.
3	If necessary, select the "Pressure" measuring mode via the MEASURING MODE parameter. On-site display: Menu path: GROUP SELECTION → MEASURING MODE Digital communication: See Page 62
4	On-site display: Select BASIC SETUP function group. Menu path: GROUP SELECTION → OPERATING MENU → SETTINGS → BASIC SETUP
5	Select a pressure unit via the PRESS. ENG. UNIT parameter, here mbar for example.
6	The pressure for the lower range value (4 mA value) is present at the device, here 0 mbar for example.
	Select GET LRV parameter.
	Confirm value present. The pressure value present is assigned to the lower current value (4 mA).
7	The pressure for the upper range value (20 mA value) is present at the device, here 300 mbar (4.5 psi) for example.
	Select GET URV parameter.
	Confirm value present. The pressure value present is assigned to the upper current value (20 mA).
8	Result: The measuring range is set for 0...+300 mbar (4.5 psi).

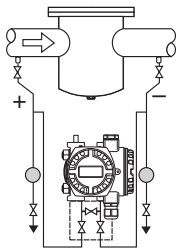

P01-PMD75xxx-19-xx-xx-xx-000

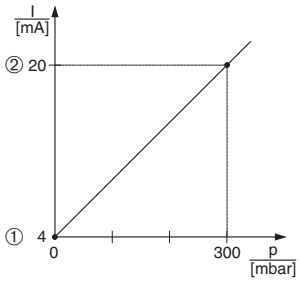

P01-xxxxxxxx-05-xx-xx-xx-010

Fig. 1: Calibration with reference pressure

1 See table, step 6.
2 See table, step 7.

You can also specify a customer-specific unit. See parameter description for PRESS. ENG. UNIT (→ Page 69).

4.2 Calibration without reference pressure

Example:
In this example, a device with a 400 mbar (6 psi) sensor is configured for the 0...+300 mbar (4.5 psi) measuring range, i.e. 0 mbar and 300 mbar (4.5 psi) are assigned to the 4 mA value and 20 mA value respectively.

Prerequisite:
- This is a theoretical calibration, i.e. the pressure values for the lower range and upper range value are known.
- See also Operating Instructions Deltabar S (BA00270P), Section "Differential pressure measurement", Cerabar S (BA00271P), Section "Pressure measurement" or Deltapilot S (BA00332P), Section "Pressure measurement".
- Due to the orientation of the device, there may be a shift in the measured value, i.e. when the container is empty, the MEASURED VALUE parameter does not display zero. → To perform a position adjustment see also Page 68, Table 6: Position adjustment.

- For a description of the parameters mentioned, see
  - Page 62, Table 2: MEASURING MODE
  - Page 68, Table 6: POSITION ADJUSTMENT
  - Page 69, Table 7: BASIC SETUP.
- For a description of further relevant parameters, see
  - Page 100, Table 15: EXTENDED SETUP
  - Page 120, Table 27: PROCESS VALUES.

⚠ WARNING

Changing the measuring mode can affect the adjustment data!

This situation can result in product overflow.

▶ Check calibration data when the measuring mode is changed.

	Description
1	If necessary, select the "Pressure" measuring mode via the MEASURING MODE parameter. On-site display: Menu path: GROUP SELECTION → MEASURING MODE Digital communication: See Page 62
2	On-site display: Select BASIC SETUP function group. Menu path: GROUP SELECTION → OPERATING MENU → SETTINGS → BASIC SETUP
3	Select a pressure unit via the PRESS. ENG. UNIT parameter, here mbar for example.
4	Select SET LRV parameter.
	Enter value, here 0 mbar, for the SET LRV parameter and confirm. This pressure value is assigned to the lower current value (4 mA).
5	Select SET URV parameter.
	Enter value, here 300 mbar (4.5 psi), for the SET URV parameter and confirm. This pressure value is assigned to the upper current value (20 mA).
6	Result: The measuring range is set for 0...+300 mbar (4.5 psi).

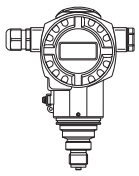

P01-PMP71xxx-19-xx-xx-xx-000

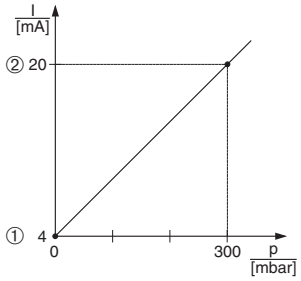

P01-xxxxxxxx-05-xx-xx-xx-010

Fig. 2: Calibration without reference pressure

1 See table, step 4.
2 See table, step 5.

- You can also perform calibration without reference pressure by means of the QUICK SETUP menu. → See Page 64 ff, Table 3: QUICK SETUP menu.
- You can also specify a customer-specific unit. See parameter description for PRESS. ENG. UNIT (→ Page 69).

5 Level measurement

5.1 Overview of level measurement

Measuring task	LEVEL SELECTION/ LEVEL MODE	Measured variable options	Description	Comment	Measured value display
The measured variable is in direct proportion to the measured pressure. Calibration is performed by entering two pressure-level value pairs.	LEVEL SELECTION: Level Easy Pressure	Via OUTPUT UNIT parameter: %, level, volume or mass units.	– Calibration with reference pressure – wet calibration, see Page 9, Section 5.2.1 – Calibration without reference pressure – dry calibration, see Page 11, Section 5.2.2	– Incorrect entries are possible – SIL mode possible – Customised units are not possible	The measured value display and the LEVEL BEFORE LIN parameter show the measured value.
The measured variable is in direct proportion to the measured pressure. Calibration is performed by entering the density and two height-level value pairs.	LEVEL SELECTION: Level Easy Height	Via OUTPUT UNIT parameter: %, level, volume or mass units.	– Calibration with reference pressure – wet calibration, see Page 13, Section 5.3.1 – Calibration without reference pressure – dry calibration, see Page 15, Section 5.3.2	– Incorrect entries are possible – SIL mode not possible – Customised units are not possible	The measured value display and the LEVEL BEFORE LIN parameter show the measured value.
The measured variable is in direct proportion to the measured pressure.	LEVEL SELECTION: Level standard/ LEVEL MODE: Linear	Via LIN. MEASURAND parameter: – % (Level) – Level – Volume – Mass	– Calibration with reference pressure – wet calibration, see Page 17, Section 5.4.1 – Calibration without reference pressure – dry calibration, see Page 19, Section 5.4.2	– Incorrect entries are rejected by the device – SIL mode not possible – Customised level, volume and mass units are possible	The measured value display and the LEVEL BEFORE LIN parameter show the measured value.
The measured variable is not in direct proportion to the measured pressure as, for example, with containers with a conical outlet. A linearisation table must be entered for the calibration.	LEVEL SELECTION: Level standard/ LEVEL MODE: Pressure Linearized	Via LINd MEASURAND parameter: – Pressure + % – Pressure + Volume – Pressure + Mass	– Calibration with reference pressure: semiautomatic entry of linearisation table, see Page 21, Section 5.5.1 – Calibration without reference pressure: manual entry of linearisation table, see Page 24, Section 5.5.2	– Incorrect entries are rejected by the device – SIL mode not possible – Customised level, volume and mass units are possible	The measured value display and the TANK CONTENT parameter show the measured value.
– Two measured variables are required or – The container shape is given by value pairs, such as height and volume. The 1st measured variable %-height or height must be in direct proportion to the measured pressure. The 2nd measured variable volume, mass or % must not be in direct proportion to the measured pressure. A linearisation table must be entered for the 2nd measured variable. The 2nd measured variable is assigned to the 1st measured variable by means of this table.	LEVEL SELECTION: Level standard/ LEVEL MODE: Height Linearized	Via COMB. MEASURAND parameter: – Height + Volume – Height + Mass – Height + % – %-Height + Volume – %-Height + Mass – %-Height + %	– Calibration with reference pressure: wet calibration and semiautomatic entry of linearisation table, see Page 26, Section 5.6.1 – Calibration without reference pressure: dry calibration and manual entry of linearisation table, see Page 30, Section 5.6.2	– Incorrect entries are rejected by the device – SIL mode not possible – Customised level, volume and mass units are possible	The measured value display and the TANK CONTENT parameter show the 2nd measured value (volume, mass or %). The LEVEL BEFORE LIN parameter displays the 1st measured value (%-height or height).

5.2 "Level Easy Pressure" level selection

5.2.1 Calibration with reference pressure – wet calibration

Example:
In this example, the level in a tank should be measured in m. The maximum level is 3 m (9.8 ft). The pressure range is set to 0 to 300 mbar (4.5 psi).

Prerequisite:
- The measured variable is in direct proportion to the pressure.
- The tank can be filled or emptied.

- See also Operating Instructions for Deltabar S (BA00270P) or Cerabar S (BA00271P), Section "Level measurement" or Deltapilot S (BA00332P), Section "Level measurement".
- The values entered for EMPTY CALIB./FULL CALIB. and SET LRV/SET URV must have a minimum interval of 1% for the "Level Easy Pressure" level mode. The value will be rejected with a warning message if the values are too close together. Further limit values are not checked; i.e. the values entered must be appropriate for the sensor and the measuring task so that the measuring device can measure correctly.
- For a description of the parameters mentioned, see
  - Page 62, Table 2: MEASURING MODE
  - Page 68, Table 6: POSITION ADJUSTMENT
  - Page 70, Table 8: LEVEL SELECTION "Level Easy Pressure"
- For a description of further relevant parameters, see
  - Page 100, Table 16: EXTENDED SETUP
  - Page 121, Table 28: PROCESS VALUES.

⚠ WARNING
Changing the measuring mode can affect the adjustment data!
This situation can result in product overflow.
▶ Check calibration data when the measuring mode is changed.

	Description
1	Deltabar S: Before you configure the device for your application, the pressure piping must be cleaned and filled with medium. See Operating Instructions BA00270P.
2	Carry out position adjustment if necessary. See Page 68, Table 6: POSITION ADJUSTMENT.
3	If necessary, select the "Level" measuring mode via the MEASURING MODE parameter. On-site display: Menu path: GROUP SELECTION → MEASURING MODE Digital communication: See Page 62
4	If necessary, select "Level Easy Pressure" level mode using the LEVEL SELECTION parameter. On-site display: Menu path: GROUP SELECTION → MEASURING MODE "Level" → LEVEL SELECTION Digital communication: See Page 63

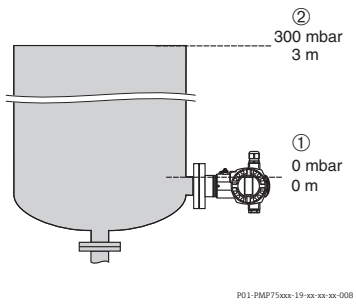

Fig. 3: Calibration with reference pressure – wet calibration

1 See Table, Step 9.
2 See Table, Step 10.

	Description
5	On-site display: Select BASIC SETUP function group. Menu path: GROUP SELECTION → OPERATING MENU → SETTINGS → BASIC SETUP
6	Select a pressure unit via the PRESS. ENG. UNIT parameter, here mbar for example.
7	Select a level unit via the OUTPUT UNIT parameter, here m for example.
8	Select the "Wet" option by means of the CALIBRATION MODE parameter.
9	Hydrostatic pressure for the lower calibration point is present at the device, here 0 mbar for example.
	Select EMPTY CALIB. parameter.
	Enter the level value, here 0 m for example. Confirm the value to assign the pressure value present to the lower level value. To accept the value displayed you must first switch to the Edit mode (see the "Editing values" section) and then press the Ⓔ button to save the value.
10	Hydrostatic pressure for the upper calibration point is present at the device, here 300 mbar (4.5 psi) for example.
	Select FULL CALIB. parameter.
	Enter the level value, here 3 m (9.8 ft) for example. Confirm the value to assign the pressure value present to the upper level value. To accept the value displayed you must first switch to the Edit mode (see the "Editing values" section) and then press the Ⓔ button to save the value.
11	Set the value for the lower current value (4 mA) by means of the SET LRV parameter.
12	Set the value for the upper current value (20 mA) by means of the SET URV parameter.
13	Result: The measuring range is set for 0 to 3 m (9.8 ft).

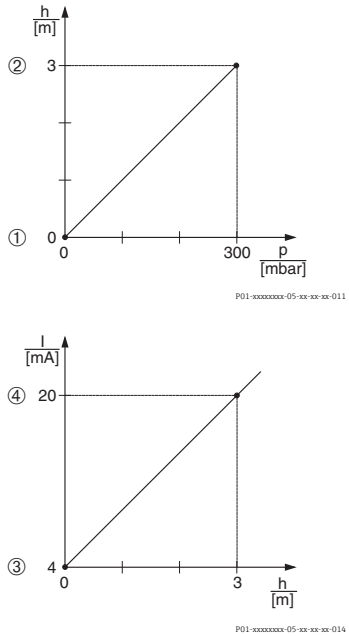

Fig. 4: Calibration with reference pressure – wet calibration

1 See Table, Step 9.
2 See Table, Step 10.
3 See Table, Step 11.
4 See Table, Step 12.

1. You can also perform calibration with reference pressure by means of the QUICK SETUP menu. → See Page 65 ff, Table 4: QUICK SETUP menu.
2. For this level mode, the measured variables %, level, volume and mass are available. → See also parameter description for OUTPUT UNIT, Page 71.
3. For operation using the on-site display, the parameters EMPTY CALIB. (→ Page 72) and FULL CALIB. (→ Page 73) also show the respective pressure present at the device. For operation using Digital communication, the pressure present at the device is displayed in the PROCESS VALUES group (menu path: OPERATING MENU→ PROCESSINFO → PROCESS VALUES).

5.2.2 Calibration without reference pressure – dry calibration

Example:
In this example, the volume in a tank should be measured in litres.The maximum volume of 1000 litres (264 US gal) corresponds to a pressure of 450 mbar (6.75 psi). The minimum volume of 0 litres corresponds to a pressure of 50 mbar (0.75 psi), as the device is mounted below the level lower range value. The device is mounted below the level lower range value.

Prerequisite:
- The measured variable is in direct proportion to the pressure.
- This is a theoretical calibration i.e. the pressure and volume values for the lower and upper calibration point must be known.

- See also Operating Instructions for Deltabar S (BA00270P) or Cerabar S (BA00271P), Section "Level measurement" or Deltapilot S (BA00332P), Section "Level measurement".
- The values entered for EMPTY CALIB./FULL CALIB. and SET LRV/SET URV must have a minimum interval of 1% for the "Level Easy Pressure" level mode. The value will be rejected with a warning message if the values are too close together. Further limit values are not checked; i.e. the values entered must be appropriate for the sensor and the measuring task so that the measuring device can measure correctly.
- Due to the orientation of the device, there may be a shift in the measured value, i.e. when the container is empty, the MEASURED VALUE parameter does not display zero. → To perform a position adjustment see also Page 68, Table 6: Position adjustment.
- For a description of the parameters mentioned, see
  - Page 62, Table 2: MEASURING MODE
  - Page 70, Table 8: LEVEL SELECTION "Level Easy Pressure"
- For a description of further relevant parameters, see
  - Page 100, Table 16: EXTENDED SETUP
  - Page 121, Table 28: PROCESS VALUES.

⚠ WARNING
Changing the measuring mode can affect the adjustment data!
This situation can result in product overflow.
▶ Check calibration data when the measuring mode is changed.

	Description
1	Select the "Level" measuring mode via the MEASURING MODE parameter. On-site display: Menu path: GROUP SELECTION → MEASURING MODE Digital communication: See Page 62
2	If necessary, select "Level Easy Pressure" level mode using the LEVEL SELECTION parameter. On-site display: Menu path: GROUP SELECTION → MEASURING MODE "Level" → LEVEL SELECTION Digital communication: See Page 63
3	On-site display: Select BASIC SETUP function group. Menu path: GROUP SELECTION → OPERATING MENU → SETTINGS → BASIC SETUP

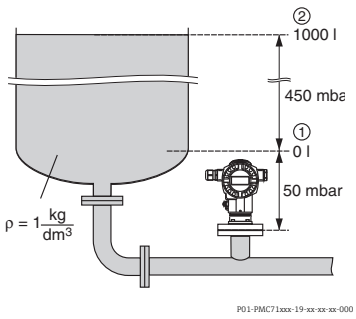

Fig. 5: Calibration without reference pressure – dry calibration

1 See Table, Steps 7 and 8.
2 See Table, Steps 9 and 10.

	Description
4	Select a pressure unit via the PRESS. ENG. UNIT parameter, here mbar for example.
5	Select a volume unit via the OUTPUT UNIT parameter, here l (litres) for example..
6	Select the "Dry" option by means of the CALIBRATION MODE parameter.
7	Enter the volume value for the lower calibration point via the EMPTY CALIB. parameter, here 0 l for example.
8	Enter the pressure value for the lower calibration point via the EMPTY PRESSURE parameter, here 50 mbar (0.75 psi) for example.
9	Enter the volume value for the upper calibration point via the FULL CALIB. parameter, here 1000 l (264 gal) for example.
10	Enter the pressure value for the upper calibration point via the FULL PRESSURE parameter, here 450 mbar (6.75 psi) for example.
11	Set the value for the lower current value (4 mA) by means of the SET LRV parameter.
12	Set the value for the upper current value (20 mA) by means of the SET URV parameter.
13	Result: The measuring range is set for 0 to 1000 l (264 gal).

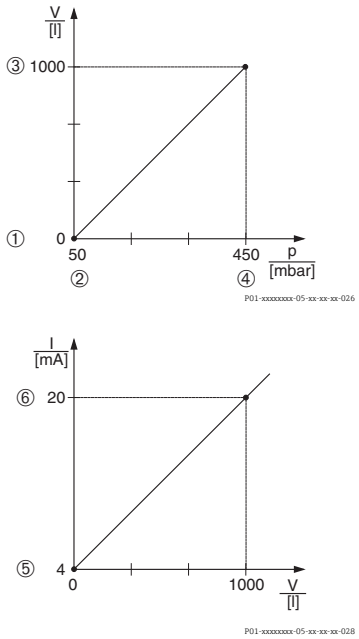

Fig. 6: Calibration with reference pressure – wet calibration

1 See Table, Step 7.
2 See Table, Step 8.
3 See Table, Step 9.
4 See Table, Step 10.
5 See Table, Step 11.
6 See Table, Step 12.

For this level mode, the measured variables %, level, volume and mass are available. → See also parameter description for OUTPUT UNIT, Page 71.

5.3 "Level Easy Height" level selection

5.3.1 Calibration with reference pressure – wet calibration

Example:
In this example, the volume in a tank should be measured in litres. The maximum volume of 1000 litres (264 US gal) corresponds to a level of 4.5 m (15 ft). The minimum volume of 0 litres corresponds to a level of 0.5 m (1.6 ft), as the device is mounted below the level lower range value. The density of the medium is 1 kg/dm^3.

Prerequisite:
- The measured variable is in direct proportion to the pressure.
- The tank can be filled or emptied.

- See also Operating Instructions for Deltabar S (BA00270P) or Cerabar S (BA00271P), Section "Level measurement" or Deltapilot S (BA00332P), Section "Level measurement".
- The values entered for EMPTY CALIB./FULL CALIB., EMPTY PRESSURE/FULL PRESSURE, EMPTY HEIGHT/FULL HEIGHT and SET LRV/SET URV must have a minimum interval of 1% for the "Level Easy Height" level mode. The value will be rejected with a warning message if the values are too close together. Further limit values are not checked; i.e. the values entered must be appropriate for the sensor and the measuring task so that the measuring device can measure correctly.
- For a description of the parameters mentioned, see
  - Page 62, Table 2: MEASURING MODE
  - Page 68, Table 6: POSITION ADJUSTMENT
  - Page 73, Table 9: LEVEL SELECTION "Level Easy Height"
- For a description of further relevant parameters, see
  - Page 100, Table 16: EXTENDED SETUP
  - Page 121, Table 28: PROCESS VALUES.

⚠ WARNING
Changing the measuring mode can affect the adjustment data!
This situation can result in product overflow.
▶ Check calibration data when the measuring mode is changed.

	Description
1	Deltabar S: Before you configure the device for your application, the pressure piping must be cleaned and filled with medium. See Operating Instructions BA00270P.
2	Carry out position adjustment if necessary. See Page 68, Table 6: POSITION ADJUSTMENT.
3	Select the "Level" measuring mode via the MEASURING MODE parameter. On-site display: Menu path: GROUP SELECTION → MEASURING MODE Digital communication: See Page 62
4	If necessary, select the "Level Easy Height" level mode using the LEVEL SELECTION parameter. On-site display: Menu path: GROUP SELECTION → MEASURING MODE "Level" → LEVEL SELECTION Digital communication: See Page 63
5	On-site display: Select BASIC SETUP function group. Menu path: GROUP SELECTION → OPERATING MENU → SETTINGS → BASIC SETUP

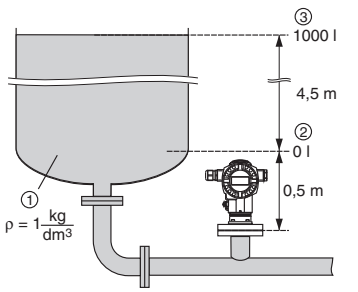

Fig. 7: Calibration with reference pressure – wet calibration

1 See Table, Steps 10 and 11.
2 See Table, Step 12.
3 See Table, Step 13.

	Description
6	Select a pressure unit via the PRESS. ENG. UNIT parameter, here mbar for example.
7	Select a volume unit via the OUTPUT UNIT parameter, here l (litres) for example..
8	Select a height unit via the HEIGHT UNIT parameter, here m for example.
9	Select the "Wet" option via the CALIBRATION MODE parameter.
10	Select a density unit via the DENSITY UNIT parameter, here kg/dm³ for example.
11	Enter the density of the fluid using the ADJUST DENSITY parameter, here kg/dm³ for example.
12	Enter the volume value for the lower calibration point via the EMPTY CALIB. parameter, here 0 l for example. (The currently measured hydrostatic pressure is displayed as height, here 0.5 m (1.6 ft) for example.) To accept the value displayed you must first switch to the Edit mode (see the "Editing values" section) and then press the Ⓔ button to save the value.
13	Enter the volume value for the upper calibration point via the FULL CALIB. parameter, here 1000 l (264 US gal) for example. (The currently measured hydrostatic pressure is displayed as height, here 4.5 m (15 ft) for example.) To accept the value displayed you must first switch to the Edit mode (see the "Editing values" section) and then press the Ⓔ button to save the value.
14	Set the value for the lower current value (4 mA) by means of the SET LRV parameter.
15	Set the value for the upper current value (20 mA) by means of the SET URV parameter.
16	Result: The measuring range is set for 0 to 1000 l (264 US gal).

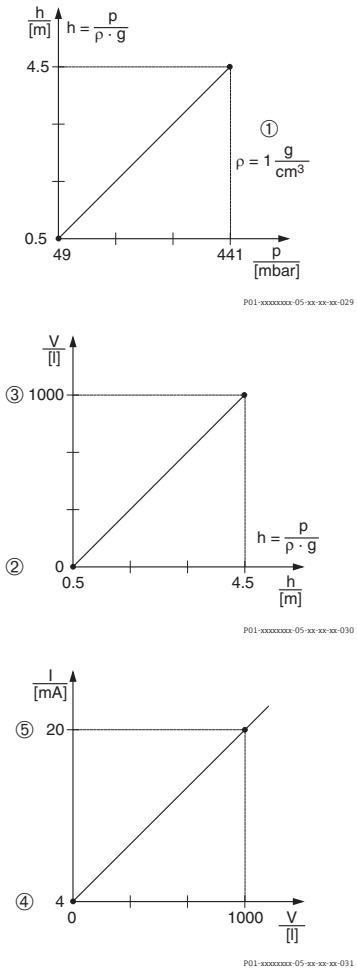

Fig. 8: Calibration with reference pressure – wet calibration

1 See Table, Steps 10 and 11.
2 See Table, Step 12.
3 See Table, Step 13.
4 See Table, Step 14.
5 See Table, Step 15.

For this level mode, the measured variables %, level, volume and mass are available. → See also parameter description for OUTPUT UNIT, Page 75.

5.3.2 Calibration without reference pressure – dry calibration

Example:
In this example, the volume in a tank should be measured in litres. The maximum volume is 1000 l (264 US gal), and the maximum height is 4.5 m (15 ft). The minimum volume of 0 litres corresponds to a level of 0.5 m (1.6 ft), as the device is mounted below the level lower range value. The density of the fluid is 1 kg/dm^3.

Prerequisite:
- The measured variable is in direct proportion to the pressure.
- This is a theoretical calibration i.e. the height and volume values for the lower and upper calibration point must be known.

- See also Operating Instructions for Deltabar S (BA00270P) or Cerabar S (BA00271P), Section "Level measurement" or Deltapilot S (BA00332P), Section "Level measurement".
- The values entered for EMPTY CALIB./FULL CALIB., EMPTY PRESSURE/FULL PRESSURE, EMPTY HEIGHT/FULL HEIGHT and SET LRV/SET URV must have a minimum interval of 1% for the "Level Easy Height" level mode. The value will be rejected with a warning message if the values are too close together. Further limit values are not checked; i.e. the values entered must be appropriate for the sensor and the measuring task so that the measuring device can measure correctly.
- Due to the orientation of the device, there may be a shift in the measured value, i.e. when the container is empty, the MEASURED VALUE parameter does not display zero. → To perform a position adjustment see also Page , Table 6: Position adjustment.
- For a description of the parameters mentioned, see
  – Page 62, Table 2: MEASURING MODE
  – Page 73, Table 9: LEVEL SELECTION "Level Easy Height"
- For a description of further relevant parameters, see
  – Page 100, Table 16: EXTENDED SETUP
  – Page 121, Table 28: PROCESS VALUES.

⚠ WARNING
Changing the measuring mode can affect the adjustment data!
This situation can result in product overflow.
▶ Check calibration data when the measuring mode is changed.

	Description
1	Select the "Level" measuring mode via the MEASURING MODE parameter. On-site display: Menu path: GROUP SELECTION → MEASURING MODE Digital communication: See Page 62
2	If necessary, select "Level Easy Height" level mode using the LEVEL SELECTION parameter. On-site display: Menu path: GROUP SELECTION → MEASURING MODE "Level" → LEVEL SELECTION Digital communication: See Page 63
3	On-site display: Select BASIC SETUP function group. Menu path: GROUP SELECTION → OPERATING MENU → SETTINGS → BASIC SETUP

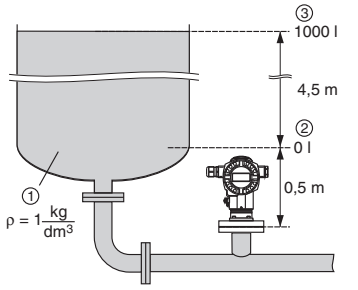

Fig. 9: Calibration without reference pressure – dry calibration

1 See Table, Steps 8 and 9.
2 See Table, Steps 10 and 11.
3 See Table, Steps 12 and 13.

	Description
4	Select a pressure unit via the PRESS. ENG. UNIT parameter, here mbar for example.
5	Select a volume unit via the OUTPUT UNIT parameter, here l (litres) for example.
6	Select a height unit via the HEIGHT UNIT parameter, here m for example.
7	Select the "Dry" option via the CALIBRATION MODE parameter.
8	Select a density unit via the DENSITY UNIT parameter, here kg/dm³ for example.
9	Enter the density of the fluid using the ADJUST DENSITY parameter, here kg/dm³ for example.
10	Enter the volume value for the lower calibration point via the EMPTY CALIB. parameter, here 0 l for example.
11	Enter the height value for the lower calibration point via the EMPTY HEIGHT parameter, here 0.5 m (1.6 ft) for example.
12	Enter the volume value for the upper calibration point via the FULL CALIB. parameter, here 1000 l (litres) (264 US gal) for example.
13	Enter the height value for the upper calibration point via the FULL HEIGHT parameter, here 4.5 m (15 ft) for example.
14	Set the value for the lower current value (4 mA) by means of the SET LRV parameter.
15	Set the value for the upper current value (20 mA) by means of the SET URV parameter.
16	Result: The measuring range is set for 0 to 1000 l (litres) (264 US gal).

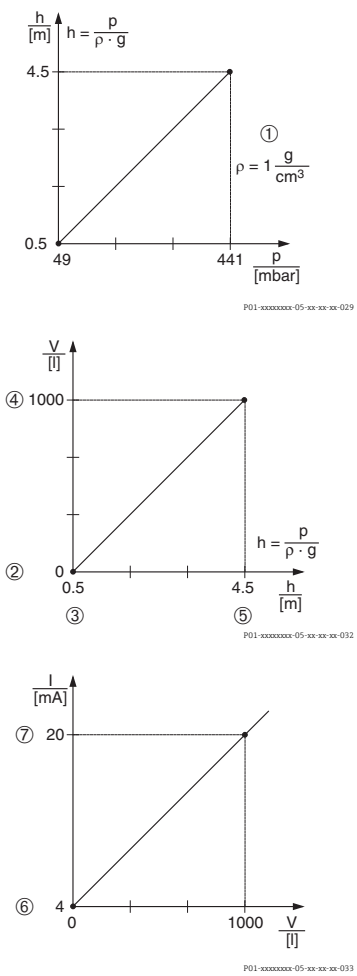

Fig. 10: Calibration with reference pressure – wet calibration

1 See Table, Steps 8 and 9.
2 See Table, Step 10.
3 See Table, Step 11.
4 See Table, Step 12.
5 See Table, Step 13.
6 See Table, Step 14.
7 See Table, Step 15.

For this level mode, the measured variables %, level, volume and mass are available. → See also parameter description for OUTPUT UNIT, Page 75.

5.4 "Level Standard" level selection, "Linear" level type

5.4.1 Calibration with reference pressure – wet calibration

Example:
In this example, the level in a tank should be measured in m. The maximum level is 3 m (9.8 ft). The pressure range is set to 0 to 300 mbar (4.5 psi).

Prerequisite:
- The measured variable is in direct proportion to the pressure.
- The tank can be filled or emptied.
- See also Operating Instructions for Deltabar S (BA00270P) or Cerabar S (BA00271P), Section "Level measurement" or Deltapilot S (BA00332P), Section "Level measurement".
- For a description of the parameters mentioned, see
  - Page 62, Table 2: MEASURING MODE
  - Page 68, Table 6: POSITION ADJUSTMENT
  - Page 77, Table 10: BASIC SETUP
  - Page 79, Table 11: BASIC SETUP – "Linear" level type.
- For a description of further relevant parameters, see
  - Page 100, Table 16: EXTENDED SETUP
  - Page 121, Table 28: PROCESS VALUES.

⚠ WARNING
Changing the measuring mode can affect the adjustment data!
This situation can result in product overflow.
▶ Check calibration data when the measuring mode is changed.

	Description
1	Deltabar S: before configuring the device for your application, the pressure piping must be cleaned and the device filled with fluid. See Operating Instructions BA00270P.
2	Carry out position adjustment if necessary. See Page 68, Table 6: POSITION ADJUSTMENT.
3	If necessary, select the "Level" measuring mode via the MEASURING MODE parameter. On-site display: Menu path: GROUP SELECTION → MEASURING MODE Digital communication: See Page 62
4	If necessary, select "Level Standard" level mode using the LEVEL SELECTION parameter. On-site display: Menu path: GROUP SELECTION → MEASURING MODE "Level" → LEVEL SELECTION Digital communication: See Page 63

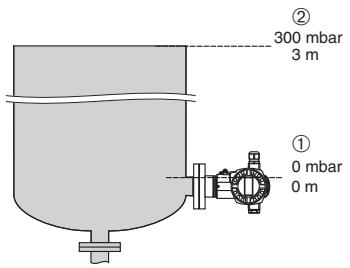

Fig. 11: Calibration with reference pressure – wet calibration

1 See table, step 11.
2 See table, step 12.

	Description
5	On-site display: Select BASIC SETUP function group. Menu path: GROUP SELECTION → OPERATING MENU → SETTINGS → BASIC SETUP
6	Select a pressure unit via the PRESS. ENG. UNIT parameter, here mbar for example.
7	Select the "Linear" option by means of the LEVEL MODE parameter.
8	Select the "Level" option by means of the LIN. MEASURAND parameter.
9	Select a level unit via the HEIGHT UNIT parameter, here m for example.
10	Select the "Wet" option by means of the CALIBRATION MODE parameter.
11	The pressure for the lower calibration point is present at the device, here 0 mbar for example.
	Select EMPTY CALIB. parameter.
	Enter the level value, here 0 m for example. Confirm the value to assign the pressure value present to the lower level value.
12	The pressure for the upper calibration point is present at the device, here 450 mbar (6.75 psi) for example.
	Select FULL CALIB. parameter.
	Enter the level value, here 3 m (9.8 ft) for example. Confirm the value to assign the pressure value present to the upper level value.
13	Set the value for the lower current value (4 mA) by means of the SET LRV parameter.
14	Set the value for the upper current value (20 mA) by means of the SET URV parameter.
15	Result: The measuring range is set for 0...3 m (9.8 ft).

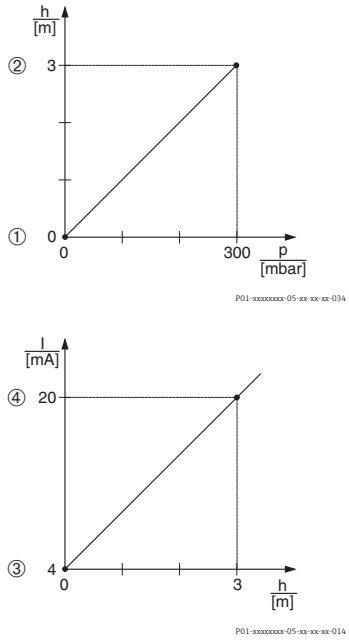

Fig. 12: Calibration with reference pressure – wet calibration

1 See table, step 11.
2 See table, step 12.
3 See table, step 13.
4 See table, step 14.

1. You can also perform calibration with reference pressure by means of the QUICK SETUP menu. → See Page 65 ff, Table 4: QUICK SETUP menu.
2. You can also specify customer-specific units. See parameter description for PRESS. ENG. UNIT (→ Page 77), HEIGHT UNIT (→ Page 79), UNIT VOLUME (→ Page 80) and MASS UNIT (→ Page 81).
3. For this level type, the measured variables %, level, volume and mass are available. → See Page 79 ff.
4. The EMPTY PRESSURE (→ Page 83) and FULL PRESSURE (→ Page 83) parameters display the pressure values belonging to the EMPTY CALIB. and FULL CALIB. parameters.

5.4.2 Calibration without reference pressure – dry calibration

Example:
In this example, the volume in a tank should be measured in m^3. The maximum volume is 5 m^3 and the maximum height 4 m (13 ft). The density of the fluid is 1 kg/dm^3. The device is mounted below the level lower range value.

Prerequisite:
- The measured variable is in direct proportion to the pressure.
- This is a theoretical calibration, i.e. the tank volume, tank height and density of the fluid are known.
- See also Operating Instructions for Deltabar S (BA00270P) or Cerabar S (BA00271P), Section "Level measurement" or Deltapilot S (BA00332P), Section "Level measurement".
- Due to the orientation of the device, there may be a shift in the measured value, i.e. when the container is empty, the MEASURED VALUE parameter does not display zero. → To perform a position adjustment see also Page 68, Table 6: Position adjustment.
- For a description of the parameters mentioned, see
  – Page 62, Table 2: MEASURING MODE
  – Page 77, Table 10: BASIC SETUP
  – Page 79, Table 11: BASIC SETUP – "Linear" level type.
- For a description of further relevant parameters, see
  – Page 100, Table 16: EXTENDED SETUP
  – Page 121, Table 26: PROCESS VALUES.

⚠ WARNING
Changing the measuring mode can affect the adjustment data!
This situation can result in product overflow.
▶ Check calibration data when the measuring mode is changed.

	Description
1	Select the "Level" measuring mode via the MEASURING MODE parameter. On-site display: Menu path: GROUP SELECTION → MEASURING MODE Digital communication: See Page 62
2	If necessary, select "Level Standard" level mode using the LEVEL SELECTION parameter. On-site display: Menu path: GROUP SELECTION → MEASURING MODE "Level" → LEVEL SELECTION Digital communication: See Page 63
3	On-site display: Select BASIC SETUP function group. Menu path: GROUP SELECTION → OPERATING MENU → SETTINGS → BASIC SETUP

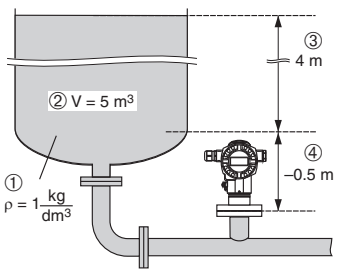

Fig. 13: Calibration without reference pressure – dry calibration

1 See table, step 9.
2 See table, step 10.
3 See table, step 11.
4 See table, step 12.

	Description
4	Select a pressure unit via the PRESS. ENG. UNIT parameter, here mbar for example.
5	Select the "Linear" option by means of the LEVEL MODE parameter.
6	Select the "Volume" option by means of the LIN. MEASURAND parameter.
7	Select a volume unit via the UNIT VOLUME parameter, here m^3 for example.
8	Select the "Dry" option by means of the CALIBRATION MODE parameter. See also the following note, point 3.
9	Enter the value for density via the ADJUST DENSITY parameter, here 1 kg/dm^3 for example.
10	Enter the tank volume via the TANK VOLUME parameter, here 5 m^3 for example.
11	Enter the tank height via the TANK HEIGHT parameter, here 4 m (13 ft) for example.
12	Enter the level offset via the ZERO POSITION parameter, here −0.5 m (-1,6 ft) for example.
13	Set the value for the lower current value (4 mA) by means of the SET LRV parameter.
14	Set the value for the upper current value (20 mA) by means of the SET URV parameter.
15	Result: The measuring range is set for 0...5 m^3.

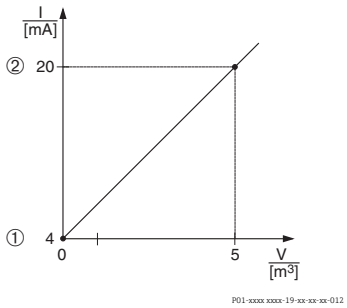

Fig. 14: Current output calibration

5 See table, step 13.
6 See table, step 14.

1. For this level type, the measured variables %, level, volume and mass are available. → See Page 79 ff.
2. You can also specify customer-specific units. See parameter description for PRESS. ENG. UNIT (→ Page 77), HEIGHT UNIT (→ Page 79), UNIT VOLUME (→ Page 80) and MASS UNIT (→ Page 81).
3. A level value is assigned to the lower and upper current value by means of the SET LRV (→ Page 86) and SET URV (→ Page 86) parameters respectively. Once you have selected the "Dry" calibration mode, the error message A711 "LRV or URV out of edit limits" can appear. The error message goes out as soon as level values which are within the editing limits are entered for the SET LRV and SET URV parameters.
   By means of the ENTER RESET CODE parameter (→ Page 124), you can use the code 2710 to automatically set the SET LRV and SET URV parameters to level values which are within the editing limits.

5.5 "Level Standard" level selection, "Pressure Linearized" level type

5.5.1 Semiautomatic entry of the linearisation table

Example:
In this example, the volume in a tank with a conical outlet should be measured in m^3.

Prerequisite:
- The tank can be filled. The linearisation characteristic must rise continuously.
- A minimum gap of 0.5 % of the distance between two points must be maintained. Spans for the "Pressure linearized" option: HYDR. PRESS MAX. – HYDR. PRESS MIN.; TANK CONTENT MAX. – TANK CONTENT MIN. Spans for the "Height linearized" option: LEVEL MAX – LEVEL MIN; TANK CONTENT MAX. – TANK CONTENT MIN.
- See also Operating Instructions for Deltabar S (BA00270P) or Cerabar S (BA00271P) or Deltapilot S (BA00332P).
- For a description of the parameters mentioned, see
  - Page 62, Table 2: MEASURING MODE
  - Page 68, Table 6: POSITION ADJUSTMENT
  - Page 77, Table 10: BASIC SETUP
  - Page 87, Table 11: BASIC SETUP – "Pressure Linearized" level type
  - Page 104, Table 18: LINEARISATION – on-site operation
  - Page 107, Table 19: LINEARISATION – Digital communication.
- For a description of further relevant parameters, see
  - Page 100, Table 16: EXTENDED SETUP
  - Page 121, Table 26: PROCESS VALUES.

⚠ WARNING
Changing the measuring mode can affect the adjustment data!
This situation can result in product overflow.
▶ Check calibration data when the measuring mode is changed.

	Description	
1	Deltabar S: before configuring the device for your application, the pressure piping must be cleaned and filled with fluid. See Operating Instructions BA00270P.	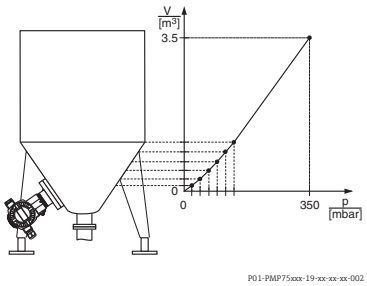
2	Carry out position adjustment if necessary. See Page 68, Table 6: POSITION ADJUSTMENT.	
	Carry out basic setup:	
3	If necessary, select the "Level" measuring mode via the MEASURING MODE parameter. On-site display: Menu path: GROUP SELECTION → MEASURING MODE Digital communication: See Page 62	
4	If necessary, select "Level Standard" level mode using the LEVEL SELECTION parameter. On-site display: Menu path: GROUP SELECTION → MEASURING MODE "Level" → LEVEL SELECTION Digital communication: See Page 63	

	Description	
5	On-site display: Select BASIC SETUP function group. Menu path: GROUP SELECTION → OPERATING MENU → SETTINGS → BASIC SETUP	
6	Select a pressure unit via the PRESS. ENG. UNIT parameter, here mbar for example.	
7	Select the "Pressure Linearized" option by means of the LEVEL MODE parameter. See also the following note, point 3.	
8	Select the "Volume" option by means of the LINd. MEASURAND parameter.	
9	Select a volume unit via the UNIT VOLUME parameter, here m^3 for example.	
10	Select HYDR. PRESS MIN. parameter.	
	Enter the minimum hydrostatic pressure to be expected, here 0 mbar for example.	
11	Select HYDR. PRESS MAX .	
	Enter the maximum hydrostatic pressure to be expected.	
	Carry out linearisation:	
12	Change the function group: Menu path: (GROUP SELECTION →) OPERATING MENU → SETTINGS → LINEARISATION	
13	Select TANK CONTENT MIN parameter.	
	Specify the minimum tank contents to be expected, here 0 m^3 for example.	
14	Select TANK CONTENT MAX parameter.	
	Specify the maximum tank contents to be expected, here 3.5 m^3 for example.	
15	On-site display: Select the "Editor table" option by means of the TABLE SELECTION parameter.	
16	Select the "Semiautomatic" option by means of the LIN. EDIT MODE parameter.	
17	Select the "New table" option by means of the EDITOR TABLE parameter.	

	Description
18	Enter linearisation table (min. 2 points, max. 32 points).
	Fill the tank to the height of the 1st point.
	LINE-NUMB: confirm value displayed.
	X-VAL.: the hydrostatic pressure present is displayed. On-site display, Digital communication: The X-VAL. displayed is saved by confirming the Y-value. See following line, Y-VAL. HART handheld terminal: Confirm X-VAL. displayed.
	Y-VAL.: enter the volume value, here 0 m^3 for example, and confirm the value.
19	On-site display: If you want to enter another point for the linearisation table, select the "Next point" option and enter the point as described in step 18. If you want to finish entering the values and activate the linearisation table, select the "Accept input table" option. Digital communication: You can enter further points for the linearisation table as explained in step 18. Once all the points have been entered, the table must be activated by means of the TAB. ACTIVATE parameter.
19	Result: The linearisation table has been entered.

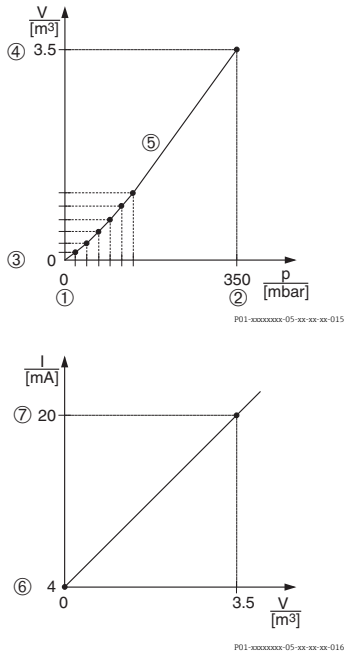

Fig. 15: Semiautomatic entry of the linearisation table

1 See table, step 10.
2 See table, step 11.
3 See table, step 13.
4 See table, step 14.
5 See table, steps 15 – 19.
6 See the following note, point 4.
7 See the following note, point 4

1. For this level type, the measured variables %, volume and mass are available. → See Page 87 ff.
2. You can also specify customer-specific units. See parameter description for PRESS. ENG. UNIT (→ Page 77), HEIGHT UNIT (→ Page 87), UNIT VOLUME (→ Page 87) and MASS UNIT (→ Page 88).
3. Once you have selected the "Pressure Linearized" level type, the warning message "W710 Set span too small. Not allowed." can appear. At this stage the linearisation table already consists of two points as standard. It could be the case that the 2nd value, and thus the highest X-VAL. of the linearisation table, is smaller than the minimum span permitted (→ MINIMUM SPAN, Page 120). The message goes out as soon as the highest X-VAL. is larger than the minimum span.
4. A level value is assigned to both the lower and upper current value with the SET LRV (→ Page 102) and SET URV (→ Page 102) parameters. If you enter values for TANK CONTENT MIN (→ Page 104 or 107) and TANK CONTENT MAX (→ Page 104 or 107), the SET LRV and SET URV parameters are also changed. If you want to assign values other than those for TANK CONTENT MIN and TANK CONTENT MAX to the lower and upper current values, the desired values must be entered for SET LRV and SET URV.

5.5.2 Manual entry of the linearisation table

Example:
In this example, the volume in a tank with a conical outlet should be measured in m^3.

Prerequisite:
- This is a theoretical calibration, i.e. the points for the linearisation table are known.
- A minimum gap of 0.5 % of the distance between two points must be maintained. Spans for the "Pressure linearized" option: HYDR. PRESS MAX. – HYDR. PRESS MIN.; TANK CONTENT MAX. – TANK CONTENT MIN. Spans for the "Height linearized" option: LEVEL MAX – LEVEL MIN; TANK CONTENT MAX. – TANK CONTENT MIN.
- See also Operating Instructions for Deltabar S (BA00270P) or Cerabar S (BA00271P), Section "Level measurement" or Deltapilot S (BA00332P), Section "Level measurement".
- For a description of the parameters mentioned, see
  - Page 62, Table 2: MEASURING MODE
  - Page 68, Table 6: POSITION ADJUSTMENT
  - Page 77, Table 10: BASIC SETUP
  - Page 87, Table 12: BASIC SETUP – "Pressure Linearized" level type
  - Page 104, Table 18: LINEARISATION – on-site operation
  - Page 107, Table 19: LINEARISATION – Digital communication.
- For a description of further relevant parameters, see
  - Page 100, Table 16: EXTENDED SETUP
  - Page 121, Table 28: PROCESS VALUES.

⚠ WARNING
Changing the measuring mode can affect the adjustment data!
This situation can result in product overflow.
▶ Check calibration data when the measuring mode is changed.

	Description	
1	Perform basic setup as per Section 5.3.1, steps 2 to 11.	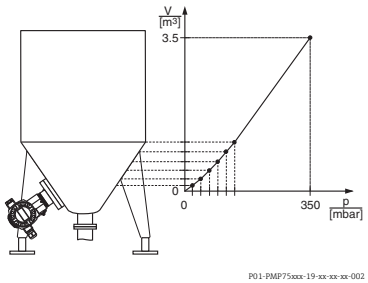
	Carry out linearisation:	
2	Change the function group: Menu path: (GROUP SELECTION →) OPERATING MENU → SETTINGS → LINEARISATION	
3	Select TANK CONTENT MIN parameter .	
	Specify the minimum tank contents to be expected, here 0 m^3 for example.	
4	Select TANK CONTENT MAX parameter .	
	Specify the maximum tank contents to be expected, here 3.5 m^3 for example.	

	Description
5	On-site display: Select the "Editor table" option by means of the TABLE SELECTION parameter.
6	Select the "Manual" option by means of the LIN. EDIT MODE parameter.
7	Select the "New table" option by means of the EDITOR TABLE parameter.
8	Enter linearisation table (min. 2 points, max. 32 points).
	LINE-NUMB: confirm value displayed.
	X-VAL.: enter the pressure value and confirm.
	Y-VAL.: enter the volume value, here 0 m^3 for example, and confirm.
9	On-site display If you want to enter another point for the linearisation table, select the "Next point" option and enter the point as described in step 8. If you want to finish entering the values and activate the linearisation table, select the "Accept input table" option. Digital communication: You can enter further points for the linearisation table as explained in step 8. Once all the points have been entered, the table must be activated by means of the TAB. ACTIVATE parameter.
10	Result: The linearisation table has been entered.

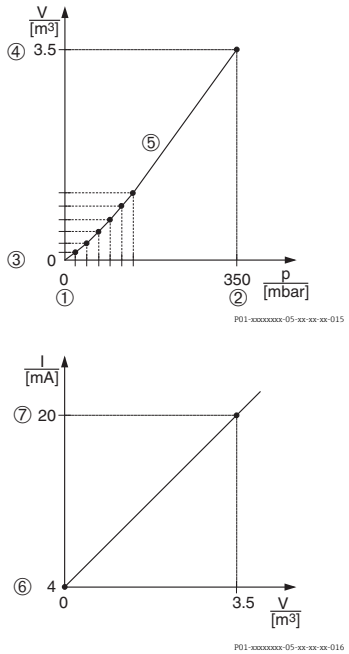

Fig. 16: Manual entry of the linearisation table

1 See Section 5.3.1, table, step 9.
2 See Section 5.3.1, table, step 10.
3 See table, step 3.
4 See table, step 4.
5 See table, steps 5 – 9.
6 See the following note, point 4.
7 See the following note, point 4.

1. For this level type, the measured variables %, volume and mass are available. → See Page 87 ff.
2. You can also specify customer-specific units. See parameter description for PRESS. ENG. UNIT (→ Page 77), HEIGHT UNIT (→ Page 87), UNIT VOLUME (→ Page 87) and MASS UNIT (→ Page 88).
3. Once you have selected the "Pressure Linearized" level type, the warning message "W710 Set span too small. Not allowed." can appear. At this stage the linearisation table already consists of two points as standard. It could be the case that the 2nd value, and thus the highest X-VAL. of the linearisation table, is smaller than the minimum span permitted (→ MINIMUM SPAN, Page 120). The message goes out as soon as the highest X-VAL. is larger than the minimum span.
4. A level value is assigned to both the lower and upper current value with the SET LRV (→ Page 102) and SET URV (→ Page 102) parameters. If you enter values for TANK CONTENT MIN (→ Page 104 or 107) and TANK CONTENT MAX (→ Page 104 or 107), the SET LRV and SET URV parameters are also changed. If you want to assign values other than those for TANK CONTENT MIN and TANK CONTENT MAX to the lower and upper current values, the desired values must be entered for SET LRV and SET URV.

5.6 "Level Standard" level selection, "Height Linearized" level type

5.6.1 Wet calibration and semiautomatic entry of the linearisation table

Example:
In this example, the height and the volume should be measured at the same time.

Prerequisite:
- The tank can be filled. The linearisation characteristic must rise continuously.
- A minimum gap of 0.5 % of the distance between two points must be maintained. Spans for the "Pressure linearized" option: HYDR. PRESS MAX. – HYDR. PRESS MIN.; TANK CONTENT MAX. – TANK CONTENT MIN. Spans for the "Height linearized" option: LEVEL MAX – LEVEL MIN; TANK CONTENT MAX. – TANK CONTENT MIN.
- See also Operating Instructions for Deltabar S (BA00270P) or Cerabar S (BA00271P) or Deltapilot S (BA00332P).
- For a description of the parameters mentioned, see
  - Page 62, Table 2: MEASURING MODE
  - Page 68, Table 6: POSITION ADJUSTMENT
  - Page 77, Table 10: BASIC SETUP
  - Page 89, Table 13: BASIC SETUP – "Height Linearized" level type
  - Page 104, Table 18: LINEARISATION – on-site operation
  - Page 107, Table 19: LINEARISATION – Digital communication.
- For a description of further parameters, see
  - Page 100, Table 16: EXTENDED SETUP
  - Page 121, Table 28: PROCESS VALUES.

⚠ WARNING
Changing the measuring mode can affect the adjustment data!
This situation can result in product overflow.
▶ Check calibration data when the measuring mode is changed.

	Description	
1	Deltabar S: before configuring the device for your application, the pressure piping must be cleaned and filled with fluid. See Operating Instructions BA00270P.	
2	Carry out position adjustment if necessary. See Page 68, Table 6: POSITION ADJUSTMENT.	
	Perform calibration for the 1st measured variable:	
3	If necessary, select the "Level" measuring mode via the MEASURING MODE parameter. On-site display: Menu path: GROUP SELECTION → MEASURING MODE See Page 62	

	Description
4	If necessary, select "Level Standard" level mode using the LEVEL SELECTION parameter. On-site display: Menu path: GROUP SELECTION → MEASURING MODE "Level" → LEVEL SELECTION Digital communication: Menu path: OPERATING MENU → SETTINGS → BASIC SETUP → MEASURING MODE "Level" → LEVEL SELECTION
5	On-site display: Select BASIC SETUP function group. Menu path: GROUP SELECTION →OPERATING MENU → SETTINGS → BASIC SETUP
6	Select a pressure unit via the PRESS. ENG. UNIT parameter, here mbar for example.
7	Select the "Height Linearized" option by means of the LEVEL MODE parameter.
8	Select the "Height + Volume" option by means of the COMB. MEASURAND parameter.
9	Select the unit for the 1st measured value via the HEIGHT UNIT parameter, here m for example.
10	Select the unit for the 2nd measured variable via the UNIT VOLUME parameter, here m3 for example.
11	Select LEVEL MIN parameter.
	Enter the minimum level to be expected, here 0 m for example.
12	Select LEVEL MAX parameter.
	Enter the maximum level to be expected, here 3 m (9.8 ft) for example.
13	Select the "Wet" option via the CALIBRATION MODE parameter (calibration mode for the 1st measured variable).
14	The pressure for the lower calibration point is present at the device, here 0 mbar for example.
	Select EMPTY CALIB. parameter.
	Enter the level value, here 0 m for example. Confirm the value to assign the pressure value present to the lower level value.
15	The pressure for the upper calibration point is present at the device, here 300 mbar (4.5 psi) for example.
	Select FULL CALIB. parameter.
	Enter the level value, here 3 m (9.8 ft) for example. Confirm the value to assign the pressure value present to the upper level value.
16	Result: The calibration for the 1st measured variable is carried out.

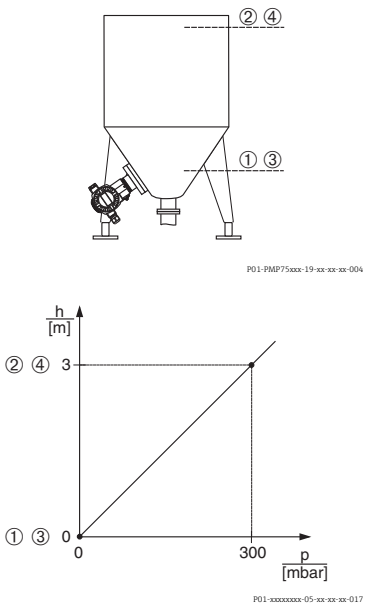

Fig. 17: Calibrating the 1st measured variable

1 See table, step 11.
2 See table, step 12.
3 See table, step 14.
4 See Table, step 15.

	Description
	Perform linearisation (calibration for the 2nd measured variable)
17	Change the function group. Menu path: (GROUP SELECTION →) OPERATING MENU → SETTINGS → LINEARISATION
18	Select TANK CONTENT MIN parameter.
	Specify the minimum tank contents to be expected, here 0 m^3 for example.
19	Select TANK CONTENT MAX parameter.
	Specify the maximum tank contents to be expected, here 5 m^3 for example.
20	On-site display: Select the "Editor table" option by means of the TABLE SELECTION parameter.
21	Select the "Semiautomatic" option by means of the LIN. EDIT MODE parameter.
22	Select the "New table" option by means of the EDITOR TABLE parameter.
23	Enter linearisation table (min. 2 points, max. 32 points).
	Fill the tank to the height of the 1st point.
	LINE-NUMB: confirm value displayed.
	X-VAL.: the hydrostatic pressure present is measured and converted to the corresponding level and displayed. On-site display, Digital communication: The X-VAL. displayed is saved by confirming the Y-value. See following line, Y-VAL. HART handheld terminal: Confirm X-VAL. displayed.
	Y-VAL.: enter the volume value, here 0 m^3 for example, and confirm the value.
24	On-site display If you want to enter another point for the linearisation table, select the "Next point" option and enter the point as described in step 23. If you want to finish entering the values and activate the linearisation table, select the "Accept input table" option. Digital communication: You can enter further points for the linearisation table as explained in step 23. Once all the points have been entered, the table must be activated by means of the TAB. ACTIVATE parameter.
25	Result: – The linearisation table has been entered. – The measured value display and the TANK CONTENT parameter display the 2nd measured value (here the volume). – The LEVEL BEFORE LIN parameter displays the 1st measured value (here the height). See also the following note, point 5.

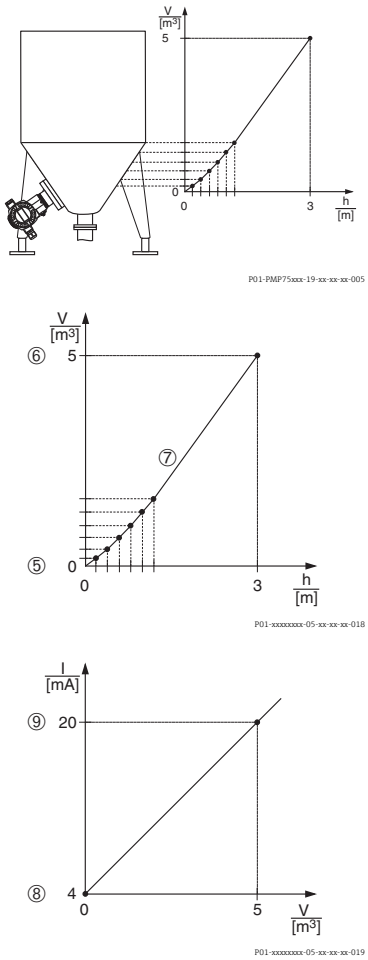

Fig. 18: Calibrating the 2nd measured variable

5 See table, step 18.
6 See table, step 19.
7 See table, steps 20 – 24.
8 See the following note, point 4.
9 See the following note, point 4.

1. For this level type, the measured variables "Height + %", "Height + Volume", "Height + Mass", "%-Height + %", "%-Height + Volume" and "%-Height + Mass" are available. → See Page 87 ff.
2. You can also specify customer-specific units. See parameter description for PRESS. ENG. UNIT (→ Page 77), HEIGHT UNIT (→ Page 90), UNIT VOLUME (→ Page 91) and MASS UNIT (→ Page 92).
3. Once you have selected the "Pressure Linearized" level type, the warning message "W710 Set span too small. Not allowed." can appear. At this stage the linearisation table already consists of two points as standard. It could be the case that the 2nd value, and thus the highest X-VAL. of the linearisation table, is smaller than the minimum span permitted (→ MINIMUM SPAN, Page 120). The message goes out as soon as the highest X-VAL. is larger than the minimum span.
4. A level value is assigned to both the lower and upper current value with the SET LRV (→ Page 102) and SET URV (→ Page 102) parameters.
   You can use the ASSIGN CURRENT parameter (→ Page 114) to specify whether the current output should depict the 1st or 2nd measured variable. Depending on the setting of the ASSIGN CURRENT parameter, enter the following values for SET LRV and SET URV:
   – ASSIGN CURRENT = tank content (factory setting) ⇒ %-value, volume value or mass value
   – ASSIGNMENT = height ⇒ level value

   The following applies for the setting ASSIGN CURRENT "Tank content":
   If you enter values for TANK CONTENT MIN (→ Page 104 or 107) and TANK CONTENT MAX (→ Page 104 or 107), the SET LRV and SET URV parameters are also changed. If you want to assign values other than those for TANK CONTENT MIN and TANK CONTENT MAX to the lower and upper current values, the desired values must be entered for SET LRV and SET URV.

   The following applies for the setting ASSIGN CURRENT "Height":
   If you enter values for LEVEL MIN (→ Page 93) and LEVEL MAX (→ Page 93), the SET LRV and SET URV parameters are also changed. If you want to assign values other than those for LEVEL MIN and LEVEL MAX to the lower and upper current values, the desired values must be entered for SET LRV and SET URV.
5. You can use the MENU DESCRIPTOR parameter (→ Page 111) to specify which measured value should be displayed on the on-site display.

5.6.2 Dry calibration and manual entry of the linearisation table

Example:
In this example, the height and the volume should be measured at the same time.

Prerequisite:
- This is a theoretical calibration, i.e. the points for the linearisation table are known.
- A minimum gap of 0.5 % of the distance between two points must be maintained. Spans for the "Pressure linearized" option: HYDR. PRESS MAX. – HYDR. PRESS MIN.; TANK CONTENT MAX. – TANK CONTENT MIN. Spans for the "Height linearized" option: LEVEL MAX – LEVEL MIN; TANK CONTENT MAX. – TANK CONTENT MIN.
- See also Operating Instructions for Deltabar S (BA00270P) or Cerabar S (BA00271P), Section "Level measurement" or Deltapilot S (BA00332P), Section "Level measurement".
- Due to the orientation of the device, there may be a shift in the measured value, i.e. when the container is empty, the MEASURED VALUE parameter does not display zero. → To perform a position adjustment see also Page 68, Table 6: Position adjustment.
- For a description of the parameters mentioned, see
  - Page 62, Table 2: MEASURING MODE
  - Page 77, Table 10: BASIC SETUP
  - Page 89, Table 12: BASIC SETUP – "Height Linearized" level type
  - Page 104, Table 18: LINEARISATION – on-site operation
  - Page 107, Table 19: LINEARISATION – Digital communication.
- For a description of further parameters, see
  - Page 100, Table 16: EXTENDED SETUP
  - Page 121, Table 28: PROCESS VALUES.

⚠ WARNING
Changing the measuring mode can affect the adjustment data!
This situation can result in product overflow.
▶ Check calibration data when the measuring mode is changed.

	Description
	Perform calibration for the 1st measured variable:
1	Perform calibration as per Section 5.4.2, steps 3 to 12.
2	Select the "Dry" option via the CALIBRATION MODE parameter (calibration mode for the 1st measured variable).
3	Enter the density of the fluid via the ADJUST DENSITY parameter, here 1 kg/dm³ for example.
4	If necessary, enter a level offset via the ZERO POSITION parameter, here 0 m for example.
5	Result: The calibration for the 1st measured variable is carried out.

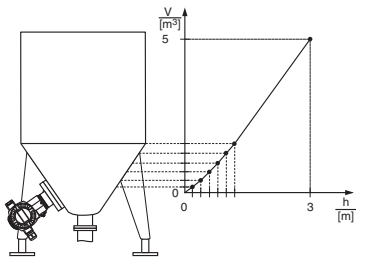

	Description
	Perform linearisation (calibration for the 2nd measured variable)
6	Change the function group. Menu path: (GROUP SELECTION →) OPERATING MENU → SETTINGS → LINEARISATION
7	Select TANK CONTENT MIN parameter.
	Specify the minimum tank contents to be expected, here 0 m^3 for example.
8	Select TANK CONTENT MAX parameter.
	Specify the maximum tank contents to be expected, here 5 m^3 for example.
9	On-site display: Select the "Editor table" option by means of the TABLE SELECTION parameter.
10	Select the "Manual" option by means of the LIN. EDIT MODE parameter.
11	Select the "New table" option by means of the EDITOR TABLE parameter.
12	Enter linearisation table (min. 2 points, max. 32 points).
	LINE-NUMB: confirm value displayed.
	X-VAL.: enter the height value and confirm.
	Y-VAL.: enter the volume value, here 0 m^3 for example, and confirm.
13	On-site display If you want to enter another point for the linearisation table, select the "Next point" option and enter the point as described in step 12. If you want to finish entering the values and activate the linearisation table, select the "Accept input table" option. Digital communication: You can enter further points for the linearisation table as explained in step 12. Once all the points have been entered, the table must be activated by means of the TAB. ACTIVATE parameter.
14	Result: – The linearisation table has been entered. – The measured value display and the TANK CONTENT parameter display the 2nd measured value (here the volume). – The LEVEL BEFORE LIN parameter displays the 1st measured value (here the height). See also the following note, point 5.

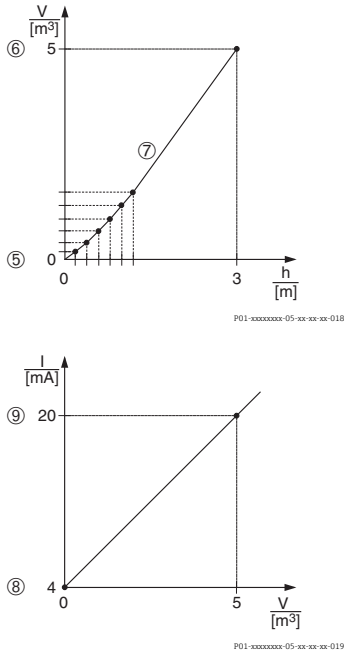

Fig. 19: Calibrating the 2nd measured variable

5 See table, step 7.
6 See table, step 8.
7 See table, steps 9 – 13.
8 See the following note, point 4.
9 See the following note, point 4.

1. For this level type, the measured variables "Height + %", "Height + Volume", "Height + Mass", "%-Height + %", "%-Height + Volume" and "%-Height + Mass" are available. → See Page 87 ff.
2. You can also specify customer-specific units. See parameter description for PRESS. ENG. UNIT (→ Page 77), HEIGHT UNIT (→ Page 90), UNIT VOLUME (→ Page 91) and MASS UNIT (→ Page 92).
3. Once you have selected the "Pressure Linearized" level type, the warning message "W710 Set span too small. Not allowed." can appear. At this stage the linearisation table already consists of two points as standard. It could be the case that the 2nd value, and thus the highest X-VAL. of the linearisation table, is smaller than the minimum span permitted

(→ MINIMUM SPAN, Page 120). The message goes out as soon as the highest X-VAL. is larger than the minimum span.

4. A level value is assigned to both the lower and upper current value with the SET LRV (→ Page 102) and SET URV (→ Page 102) parameters.
   You can use the ASSIGN CURRENT parameter (→ Page 114) to specify whether the current output should depict the 1st or 2nd measured variable. Depending on the setting of the ASSIGN CURRENT parameter, enter the following values for SET LRV and SET URV:
   – ASSIGN CURRENT = tank content (factory setting) ⇒ %- value, volume value or mass value
   – ASSIGNMENT = height ⇒ level value

   The following applies for the setting ASSIGN CURRENT "Tank content":
   If you enter values for TANK CONTENT MIN (→ Page 104 or 107) and TANK CONTENT MAX (→ Page 104 or 107), the SET LRV and SET URV parameters are also changed. If you want to assign values other than those for TANK CONTENT MIN and TANK CONTENT MAX to the lower and upper current values, the desired values must be entered for SET LRV and SET URV.

   The following applies for the setting ASSIGN CURRENT "Height":
   If you enter values for LEVEL MIN (→ Page 93) and LEVEL MAX (→ Page 93), the SET LRV and SET URV parameters are also changed. If you want to assign values other than those for LEVEL MIN and LEVEL MAX to the lower and upper current values, the desired values must be entered for SET LRV and SET URV.
5. You can use the MENU DESCRIPTOR parameter (→ Page 111) to specify which measured value should be displayed on the on-site display.

6 Flow measurement

6.1 Calibration

Example:
In this example, a volume flow should be measured in m^3/h.

- The "Flow measurement" measuring mode is only available for the Deltabar S differential pressure transmitter.
- See also Operating Instructions BA00270P Deltabar S, Section "Flow measurement".
- For a description of the parameters mentioned, see
  - Page 62, Table 2: MEASURING MODE
  - Page 68, Table 6: POSITION ADJUSTMENT
  - Page 96 ff, Table 12: BASIC SETUP
  - Page 102 ff, Table 15: EXTENDED SETUP.
- For a description of further parameters, see
  - Page 102, Table 15: EXTENDED SETUP
  - Page 122, Table 29: PROCESS VALUES.

⚠ WARNING
Changing the measuring mode can affect the adjustment data!
This situation can result in product overflow.
▶ Check calibration data when the measuring mode is changed.

	Description
1	Before configuring the device for your application, the pressure piping must be cleaned and the device filled with fluid. See Operating Instructions BA00270P.
2	Carry out position adjustment if necessary. See Page 68, Table 6: POSITION ADJUSTMENT.
3	If necessary, select the "Flow" measuring mode via the MEASURING MODE parameter. On-site display: Menu path: GROUP SELECTION → MEASURING MODE Digital communication: See Page 62
4	On-site display: Select BASIC SETUP function group. Menu path: GROUP SELECTION → OPERATING MENU → SETTINGS → BASIC SETUP
5	Select a pressure unit via the PRESS. ENG. UNIT parameter, here mbar for example.
6	Select the "Volume p. cond." option by means of the FLOW-MEAS. TYPE parameter.
7	Select a flow unit via the UNIT FLOW parameter, here m^3/h for example.
8	Select MAX. FLOW parameter.
	Enter the maximum flow value of the primary element, here 6000 m^3/h for example. See also layout sheet of primary element.
9	Select MAX PRESS. FLOW parameter.
	Enter the maximum pressure, here 400 mbar (6 psi) for example. See also layout sheet of primary element.
10	Result: The device is configured for flow measurement.

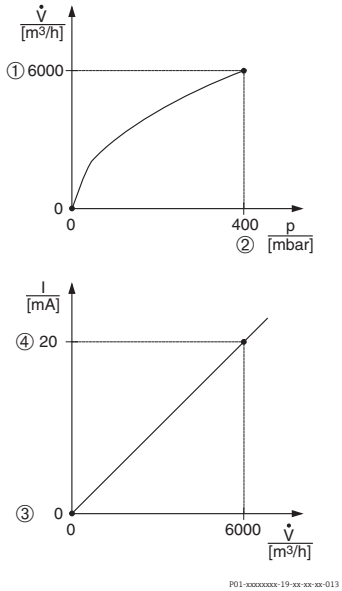

Fig. 20: Flow measurement calibration

1 See table, step 8.
2 See table, step 9.
3 See the following note, point 4.
4 See the following note, point 4.

1. You can also perform calibration by means of the QUICK SETUP menu. → See Page 66 ff, Table 5: QUICK SETUP menu.
2. Using the FLOW-MEAS. TYPE parameter, you can choose between the following flow types:
   – Volume p. cond. (volume under operating conditions)
   – Gas norm. cond. (norm volume under norm conditions in Europe: 1013.25 mbar and 273.15 K (0°C))
   – Gas std. cond. (standard volume under standard conditions in USA: 1013.25 mbar (14.7 psi) and 288. 15 K (15°C/59°F))
   – Mass
3. Depending on the flow type selected, you can choose between various units. You can also specify a customer-specific unit.
   See parameter description for PRESS. ENG. UNIT (→ Page 97), UNIT FLOW (→ Page 98), NORM FLOW UNIT (→ Page 98), STD. FLOW UNIT (→ Page 98) and MASS FLOW UNIT (→ Page 99).
4. A flow value or a pressure value is assigned to both the lower and upper current value with the SET LRV (→ Page 103) and SET URV (→ Page 104) parameters.
   You can use the LINEAR/SQROOT parameter (→ Page 114) to specify whether the current output should depict the linear pressure signal or the Flow (square root) flow signal. Depending on the setting of the LINEAR/SQROOT parameter, enter the following values for SET LRV and SET URV:
   – LINEAR/SQROOT = Flow (square root) (factory setting) ⇒ flow value
   – LINEAR/SQROOT = Differential pres. ⇒ pressure value

   The following applies for the setting LINEAR/SQROOT "Flow (square root)":
   As per the factory settings, the lower current value is set to equal zero and the upper current value is set to the MAX. FLOW value. If you enter a value for MAX. FLOW, the SET URV parameter is also changed. If you want to assign values other than zero and MAX. FLOW to the lower and upper current values, the desired values must be entered for SET LRV and SET URV.

   The following applies for the setting LINEAR/SQROOT "Differential pres.":
   As per the factory settings, the lower current value is set to equal zero and the upper current value is set to the MAX. PRESS. FLOW value. If you enter a value for MAX PRESS. FLOW, the SET URV parameter is also changed. If you want to assign values other than zero and MAX PRESS. FLOW to the lower and upper current values, the desired values must be entered for SET LRV and SET URV.
5. In the lower measuring range, small flow quantities (creepages) can lead to large measured value fluctuations. You can activate low flow cut-off via the LOW FLOW CUT-OFF parameter (→ Page 103).

6.2 Totalizers

Example:
In this example, the volume flow should be totalised and displayed in the unit m^3E^3. Negative flows should be added to the flow rate.

- For a description of the parameters mentioned, see
  - Page 109 ff, Table 18: TOTALIZER SETUP
  - Page 122 ff, Table 29: PROCESS VALUES
- Totalizer 1 can be reset. Totalizer 2 cannot be reset.

	Description
1	Calibrate the device as per Section 6.1.
2	Change the function group: (GROUP SELECTION →) OPERATING MENU → SETTINGS → TOTALIZER SETUP
3	Select a flow unit via the TOTALIZER 1 UNIT parameter, here m^3 E^3 for example.
4	Use the NEG. FLOW TOT. 1 parameter to specify the totalising mode for negative flows, here the "Positive" option for example.
5	Reset totalizer 1 to zero via the RESET TOTALIZER parameter.
6	Result: The TOTALIZER 1 and TOTAL. 1 OVERFLOW parameters display the totalised volume flow.

- You can also specify a customer-specific unit. → See parameter description for TOTALIZER 1 UNIT (→ Page 110) and TOTALIZER 2 UNIT (→ Page 111).
- The TOTALIZER 1 and TOTAL. 1 OVERFLOW parameters display the totalised flow value of the first totalizer. The TOTALIZER 2 and TOTAL. 2 OVERFLOW parameters display the totalised flow value of the second totalizer. → See Page 122 ff, PROCESS VALUES function group.
- You can use the MENU DESCRIPTOR parameter (→ Page 111) to specify which measured value should be displayed on the on-site display.

7 On-site display operating menu

The "Flow" measuring mode is only available for the Deltabar S differential pressure transmitter (not valid for (160 bar (2400 psi) and 250 bar (3750 psi) measuring cell). Depending on the parameter configuration, not all submenus and parameters are available. In the column "Measuring mode, Level mode or Level selection" all available operating modes are listed.

Level 1	Level 2	Level 3	Level 4	Measuring mode, Level mode or Level selection	Display ID	See page
LANGUAGE	LANGUAGE			all	079	62
MEASURING MODE	MEASURING MODE			all	389	62
		Level	LEVEL SELECTION		020	63
		Flow				
		Pressure				
QUICK SETUP	POS.ZERO ADJUST			all	685	64
	POS. INPUT VALUE				563	64
	SET LRV			Pressure	245	64
	SET URV			Pressure	246	64
	EMPTY CALIB.			Level	314	66
	FULL CALIB.			Level	315	66
	MAX. FLOW			Flow	311	67
	MAX PRESS. FLOW			Flow	634	67
	DAMPING VALUE			all	247	65
OPERATING MENU	**SETTINGS**	**POSITION ADJUST.**	POS.ZERO ADJUST	all	685	64
			POS. INPUT VALUE		563	64
			CALIB. OFFSET		319	68
		BASIC SETUP	PRESS. ENG. UNIT	Pressure	060	69
			CUSTOMER UNIT P		075	69
			CUST.UNIT FACT.P		317	69
			SET LRV		245	69
			SET URV		246	70
			GET LRV		309	70
			GET URV		310	70
			DAMPING VALUE		247	77
			PRESS. ENG. UNIT	Level Easy Pressure	060	70
			CUSTOMER UNIT P		075	71
			CUST.UNIT FACT.P		317	71
			OUTPUT UNIT		023	71
			CALIBRATION MODE		008	72
			EMPTY CALIB.	(Wet)	010	72
			EMPTY CALIB.	(Dry)	010	72
			FULL CALIB.	(Wet)	004	72
			FULL CALIB.	(Dry)	004	73

Level 1	Level 2	Level 3	Level 4	Measuring mode, Level mode or Level selection	Display ID	See page
			EMPTY PRESSURE	(Dry)	011	72
			FULL PRESSURE	(Dry)	005	73
			SET LRV		013	73
			SET URV		012	73
			DAMPING VALUE		247	73
			PRESS. ENG. UNIT	Level Easy Height	060	74
			CUSTOMER UNIT P		075	74
			CUST.UNIT FACT.P		317	74
			OUTPUT UNIT		023	75
			HEIGHT UNIT		003	75
			CALIBRATION MODE		008	75
			DENSITY UNIT		001	75
			ADJUST DENSITY		007	75
			EMPTY CALIB.	(Wet)	010	76
			EMPTY CALIB.	(Dry)	010	76
			FULL CALIB.	(Wet)	004	76
			FULL CALIB.	(Dry)	004	76
			EMPTY HEIGHT	(Dry)	009	76
			FULL HEIGHT	(Dry)	006	77
			SET LRV		013	77
			SET URV		012	77
			DAMPING VALUE		247	77
			PRESS. ENG. UNIT	Level Standard	060	77
			CUSTOMER UNIT P		075	78
			CUST.UNIT FACT.P		317	78
			LEVEL MODE		718	78
			LIN. MEASURAND	Linear	804	79
			HEIGHT UNIT		708	79
			CUSTOMER UNIT H		706	79
			CUST. UNIT FACT. H		705	80
			UNIT VOLUME		313	80
			CUSTOMER UNIT V		608	80
			CUST. UNIT FACT. V		607	81
			MASS UNIT		709	81
			CUSTOMER UNIT M		704	81
			CUST. UNIT FACT. M		703	82
			CALIBRATION MOD		392	82
			EMPTY CALIB.		314	82
			EMPTY PRESSURE		710	83
			FULL CALIB.		315	83
			FULL PRESSURE		711	83
			ADJUSTED DENSITY		810	83

Level 1	Level 2	Level 3	Level 4	Measuring mode, Level mode or Level selection	Display ID	See page
			DENSITY UNIT		812	83
			ADJUST DENSITY		316	83
			UNIT VOLUME		316	84
			CUSTOMER UNIT V		608	84
			CUST. UNIT FACT. V		607	84
			TANK VOLUME		858	84
			HEIGHT UNIT		708	85
			CUSTOMER UNIT H		706	85
			CUST. UNIT FACT. H		705	85
			TANK HEIGHT		859	85
			100% POINT		813	86
			ZERO POSITION		814	86
			SET LRV		719	86
			SET URV		720	86
			DAMPING VALUE		247	86
			LINd. MEASURAND	Pressure Linearized	805	87
			UNIT VOLUME		313	87
			CUSTOMER UNIT V		608	87
			CUST. UNIT FACT. V		607	88
			MASS UNIT		709	88
			CUSTOMER UNIT M		704	88
			CUST. UNIT FACT. M		703	89
			HYDR. PRESS MIN.		775	89
			HYDR. PRESS MAX.		761	89
			DAMPING VALUE		247	89
			COMB. MEASURAND	Height Linearized	806	90
			HEIGHT UNIT		708	90
			CUSTOMER UNIT H		706	90
			CUST. UNIT FACT. H		705	90
			UNIT VOLUME		313	91
			CUSTOMER UNIT V		608	91
			CUST. UNIT FACT. V		607	91
			MASS UNIT		709	92
			CUSTOMER UNIT M		704	92
			CUST. UNIT FACT. M		703	92
			LEVEL MIN		755	93
			LEVEL MAX		712	93
			CALIBRATION MODE		392	93
			EMPTY CALIB.		314	93
			EMPTY PRESSURE		710	94
			FULL CALIB.		315	94
			FULL PRESSURE		711	94

Level 1	Level 2	Level 3	Level 4	Measuring mode, Level mode or Level selection	Display ID	See page
			ADJUSTED DENSITY		810	94
			DENSITY UNIT		812	94
			ADJUST DENSITY		316	94
			HEIGHT UNIT		708	95
			CUSTOMER UNIT H		706	95
			CUST. UNIT FACT. H		705	95
			100% POINT		813	96
			ZERO POSITION		814	96
			DAMPING VALUE		247	96
			PRESS. ENG. UNIT	Flow	060	97
			CUSTOMER UNIT P		075	97
			CUST. UNIT FACT. P		317	97
			FLOW-MEAS. TYPE		640	98
			UNIT FLOW		391	98
			NORM FLOW UNIT		661	98
			STD. FLOW UNIT		660	98
			MASS FLOW UNIT		571	99
			CUSTOMER UNIT F		610	99
			CUST. UNIT FACT. F		609	99
			MAX. FLOW		311	100
			MAX PRESS. FLOW		634	100
			DAMPING VALUE		247	100
		EXTENDED SETUP	TEMP. ENG. UNIT	Pressure	318	100
			TEMP. ENG. UNIT	Level	318	101
			DENSITY UNIT		(001)/ (812)	101
			ADJUST DENSITY		(007)/ (316)	101
			PROCESS DENSITY		(025)/ (811)	101
			SET LRV		762	102
			SET URV		763	102
			TEMP. ENG. UNIT	Flow	318	103
			LOW FLOW CUT-OFF		442	103
			SET. L. FL. CUT-OFF		323	103
			SET LRV		637	103
			SET URV		638	104
		LINEARIZATION	TANK CONTENT MIN	Level	759	104
			TANK CONTENT MAX		713	104
			TABLE SELECTION		808	105
			LIN. EDIT MODE		397	105
			EDITOR TABLE		809	105
			LINE-NUMB:		549	105

Level 1	Level 2	Level 3	Level 4	Measuring mode, Level mode or Level selection	Display ID	See page
			Y-VAL:		551	105
			X-VAL:		550	106
			TABLE EDITOR		770	109
			MEASURING TABLE		549	106
			MEASURING TABLE		717	106
			TANK DESCRIPTION		815	106
		TOTALISER SETUP	TOTALIZER 1 UNIT	Flow	662, 398, 666, 664	110
			TOT. 1 USER UNIT		627	110
			FACT.U.U.TOTAL.1		329	110
			NEG. FLOW TOT. 1		400	110
			RESET TOTALISER1		331	111
			TOTALIZER 2 UNIT		663, 399, 667, 665	111
			TOT. 2 UNIT TEXT		628	111
			FACT.U.U.TOTAL.2		330	111
			NEG. FLOW TOT. 2		416	111
	SAFETY CONFIRM. See Safety Manual for Deltabar S (SD00189), Cerabar S (SD00190) or Deltapilot S (SD00213P).					
	DISPLAY	MAIN LINE CONT.		all	419	111
		MAIN DATA FORMAT			688	112
		ALTERNATE DATA			423	112
		DISPLAY CONTRAST			339	112
		DIGITS SET			840	112
	OUTPUT	OUTPUT CURRENT		all	254	112
		CURRENT CHARACT.			694, 695 696, 764	113
		OUTPUT FAIL MODE			388	113
		ALT.CURR.OUTPUT			597	114
		SET MAX. ALARM			342	114
		SET MIN. CURRENT			343	114
		ASSIGN CURRENT		Height Linearized	760	114
		LINEAR/SQROOT		Flow	390	114
	TRANSMITTER INFO	**HART DATA**	CURRENT MODE	all	052	115
			BUS ADDRESS		345	115
			DEVICE TYPE		002, 351, 802	115
			DEVICE REVISION		699	115
			PREAMBLE NUMBER		036	116
			MANUFACTOR ID		432	116
			HART MESSAGE		271	116
			HART DATE		481	116
		TRANSMITTER DATA	DEVICE SERIAL No	all	354	117
			ELECTR.SERIAL No		386	117

Level 1	Level 2	Level 3	Level 4	Measuring mode, Level mode or Level selection	Display ID	See page
			CUST. TAG NUMBER		055	117
			LONG TAG NUMBER		305	117
			ADDITIONAL INFO.		272	117
			DEVICE DESIGN.		350	117
			HARDWARE REV.		266	117
			SOFTWARE VERSION		264	117
			CONFIG RECORDER		352	117
			PCB TEMPERATURE		357	117
			Allowed Min.TEMP		358	117
			Allowed Max.TEMP		359	117
			DIP STATUS		363	118
		PROCESS CONNECTION	Pmax PROC. CONN.	all	570	118
			PROC.CONN.TYPE		482	118
			MAT.PROC.CONN. +		360	118
			MAT.PROC.CONN. -		361	118
			SEAL TYPE		362	119
		SENSOR DATA	SENSOR SER. No.	all	250	120
			PRESS.SENS LOLIM		484	120
			PRESS.SENS HILIM		485	120
			MINIMUM SPAN		591	120
			SENSOR MEAS.TYPE		581	120
			MAT. MEMBRANE		365	120
			FILLING FLUID		366	120
			Tmin SENSOR		368	120
			Tmax SENSOR		369	120
			SENS H/WARE REV		487	120
	PROCESS INFO	PROCESS VALUES	PRESSURE	all	301	121
			CORRECTED PRESS.		434	121
			SENSOR PRESSURE		584	121
			SENSOR TEMP.		367	121
			MEAS. VAL. TREND		378	121
			LEVEL BEFORE LIN	Linear Height Linearized	050	122
			TANK CONTENT	Pressure Linearized Height Linearized	370	122
			SUPPRESSED FLOW	Flow	375	123
			TOTALISER 1		652	123
			TOTAL.1 OVERFLOW		655	123
			TOTALISER 2		657	123
			TOTAL.2 OVERFLOW		658	123
		PEAK HOLD INDIC.	COUNTER:P > Pmax	all	380	123
			MAX. MEAS.PRESS.		383	123
			COUNTER:P < Pmin		467	123

Level 1	Level 2	Level 3	Level 4	Measuring mode, Level mode or Level selection	Display ID	See page
			MIN. MEAS.PRESS.		469	123
			COUNTER:T > Tmax		404	124
			MAX. MEAS.TEMP.		471	124
			COUNTER:T < Tmin		472	124
			MIN. MEAS.TEMP.		474	124
			PCB COUNT:T>Tmax		488	124
			PCB MAX. TEMP.		490	124
			PCB COUNT:T<Tmin		492	124
			PCB MIN. TEMP.		494	124
			RESET PEAKHOLD		382	124
	OPERATION	ENTER RESET CODE		all	047	124
		OPERATING HOURS			409	124
		INSERT PIN No			48	125
		HistoROM AVAIL.			831	125
		DOWNLOAD SELECT.			014	125
		HistoROM CONTROL			832	125
	DIAGNOSTICS	**SIMULATION**	SIMULATION MODE	all	413	126
			SIM. PRESSURE		414	126
			SIM.FLOW VALUE	Flow	639	126
			SIM. LEVEL	Level	714	126
			SIM. TANK CONT.	Level	715	126
			SIM. CURRENT		270	126
			SIM. ERROR NO.		476	127
		MESSAGES	ALARM STATUS	all	046	127
			LAST DIAG. CODE		564	127
			ACK. ALARM MODE		401	127
			ACK. ALARM		500	127
			RESET ALL ALARMS		603	128
			ERROR No.		600	128
			SELECT ALARMTYPE		595	128
			ALARM DELAY		336	128
			ALARM DISPL.TIME		480	128
		USER LIMITS	PminALARM WINDOW	all	332	129
			PmaxALARM WINDOW		333	129
			TminALARM WINDOW		334	129
			TmaxALARM WINDOW		335	129
	SERVICE	**SYSTEM 2**	CURR. TRIM 4mA	all	045	129
			CURR. TRIM 20mA		042	130
			OFFSET 4mA TRIM		043	130
			OFFSET 20mA TRIM		044	130

8 FieldCare operating menu

The "Flow" measuring mode is only available for the Deltabar S differential pressure transmitter (not valid for (160 bar (2400 psi) and 250 bar (3750 psi) measuring cell).
Depending on the parameter configuration, not all submenus and parameters are available.
In the column "Measuring mode, Level mode or Level selection" all available operating modes are listed.

Level 1	Level 2	Level 3	Level 4	Measuring mode, Level mode or Level selection	See page
MEASURING MODE	MEASURING MODE				62
	LEVEL SELECTION			Level	63
	LINEAR/SQROOT			Pressure and Flow	114
	HART PRIMARY VALUE IS			all	116
QUICK SETUP	**DEVICE INFO**	STATUS LOCKING (DIP STATUS)		all	118
		CUST. TAG NUMBER			117
		LONG TAG NUMBER			117
		ADDITIONAL INFO.			117
		HART MESSAGE			116
		HART DATE			116
	UNITS	PRESS. ENG. UNIT		Pressure	69
		CUST.UNIT FACT.P			69
		CUSTOMER UNIT P			69
		TEMP. ENG. UNIT			100
		PRESS. ENG. UNIT		Level Easy Pressure	70
		CUST.UNIT FACT.P			71
		CUSTOMER UNIT P			71
		PRESS. ENG. UNIT		Level Easy Height	74
		CUST.UNIT FACT.P			74
		CUSTOMER UNIT P			74
		PRESS. ENG. UNIT		Level Standard	77
		CUST.UNIT FACT.P			78
		CUSTOMER UNIT P			78
		TEMP. ENG. UNIT			100
		PRESS. ENG. UNIT		Flow	97
		CUST.UNIT FACT.P			97
		CUSTOMER UNIT P			97
		TEMP. ENG. UNIT			103
	RANGE VALUES	SET LRV		Pressure	64
		SET URV			64
		PRESS. SENS LOLIM			120
		PRESS. SENS HILIM			120
		LINEAR/SQROOT			114
		CALIB. OFFSET			68

Level 1	Level 2	Level 3	Level 4	Measuring mode, Level mode or Level selection	See page
		POS. ZERO ADJUST			64
		SET MIN. CURRENT			114
		DAMPING VALUE			65
		EMPTY PRESSURE		Level Standard	72
		FULL PRESSURE			73
		PRESS. SENS LOLIM			120
		PRESS. SENS HILIM			120
		CALIB. OFFSET			68
		POS. ZERO ADJUST			65
		SET MIN. CURRENT			114
		DAMPING VALUE			66
		EMPTY PRESSURE		Level Easy Pressure	72
		FULL PRESSURE			73
		PRESS. SENS LOLIM			120
		PRESS. SENS HILIM			120
		CALIB. OFFSET			68
		POS. ZERO ADJUST			65
		SET MIN. CURRENT			114
		DAMPING VALUE			73
		EMPTY PRESSURE		Level Easy Height	72
		FULL PRESSURE			73
		PRESS. SENS LOLIM			120
		PRESS. SENS HILIM			120
		CALIB. OFFSET			68
		POS. ZERO ADJUST			65
		SET MIN. CURRENT			114
		DAMPING VALUE			77
		MIN.PRESS. FLOW		Flow	67
		MAX.PRESS. FLOW			67
		PRESS. SENS LOLIM			120
		PRESS. SENS HILIM			120
		LINEAR/SQROOT			114
		CALIB. OFFSET			68
		POS. ZERO ADJUST			67
		SET MIN. CURRENT			114
		DAMPING VALUE			67
	FLOW CUT-OFF	LOW FLOW CUT-OFF		Flow	103
		SET.L.FL.CUT-OFF			103
	DISP/PV SETTINGS	FLOW-MEAS. TYPE		Flow	98
		MASS FLOW UNIT			99
		MAX. FLOW			100
		UNIT FLOW			98
		NORM FLOW UNIT			98

Level 1	Level 2	Level 3	Level 4	Measuring mode, Level mode or Level selection	See page
		STD. FLOW UNIT			98
	LEVEL ADJUST	EMPTY CALIB.		Level Standard	72
		EMPTY PRESSURE			72
		FULL CALIB.			72
		FULL PRESSURE			73
		LEVEL MODE			78
		LIN. MEASURAND			79
		CALIBRATION MODE			82
		OUTPUT UNIT		Level Easy Pressure	71
		CALIBRATION MODE			72
		EMPTY CALIB.			72
		EMPTY PRESSURE			72
		FULL CALIB.			72
		FULL PRESSURE			73
		OUTPUT UNIT		Level Easy Height	75
		HEIGHT UNIT			75
		CALIBRATION MODE			75
		EMPTY CALIB.			76
		EMPTY HEIGHT			76
		EMPTY PRESSURE			72
		FULL CALIB.			76
		FULL HEIGHT			77
		FULL PRESSURE			73
		DENSITY UNIT			75
		ADJUST DENSITY			75
	ALARM SETTINGS	OUTPUT FAIL MODE		all	113
		ALT. CURR. OUTPUT			114
		VIEW ALARMS SET.			131
OPERATING MENU	**SETTINGS**	**POSITION ADJUST.**	PRESSURE	all	123
			POS.ZERO ADJUST		68
			POS. INPUT VALUE		68
			CALIB. OFFSET		68
		BASIC SETUP	PRESS. ENG. UNIT	Pressure	69
			CUSTOMER UNIT P		69
			CUST. UNIT FACT. P		69
			PRESS. SENS. LOLIM		120
			PRESS. SENS. HILIM		120
			LINEAR/SQROOT		114
			SET LRV		69
			SET URV		70
			GET LRV		70
			GET URV		70
			DAMPING VALUE		70

Level 1	Level 2	Level 3	Level 4	Measuring mode, Level mode or Level selection	See page
		BASIC SETUP	PRESS. ENG. UNIT	Level Easy Pressure	70
			CUSTOMER UNIT P		71
			CUST. UNIT FACT. P		71
			PRESS. SENS. LOLIM		120
			PRESS. SENS. HILIM		120
			OUTPUT UNIT		71
			CALIBRATION MODE		72
			EMPTY CALIB.		72
			EMPTY PRESSURE		72
			FULL CALIB.		73
			FULL PRESSURE		73
			SET LRV		73
			SET URV		73
			DAMPING VALUE		73
		BASIC SETUP	PRESS. ENG. UNIT	Level Easy Height	74
			CUSTOMER UNIT P		74
			CUST. UNIT FACT. P		74
			PRESS. SENS. LOLIM		120
			PRESS. SENS. HILIM		120
			OUTPUT UNIT		75
			HEIGHT UNIT		75
			CALIBRATION MODE		75
			DENSITY UNIT		75
			ADJUST DENSITY		75
			EMPTY CALIB.		76
			EMPTY HEIGHT		76
			EMPTY PRESSURE		72
			FULL CALIB.		76
			FULL HEIGHT		77
			FULL PRESSURE		73
			SET LRV		77
			SET URV		77
			DAMPING VALUE		77
		BASIC SETUP	PRESS. ENG. UNIT	Level Standard LEVEL MODE = Linear, LIN. MEASURAND = **% (Height)** CALIBRATION MODE = **Dry**	77
			CUSTOMER UNIT P		78
			CUST. UNIT FACT. P		78
			PRESS. SENS. LOLIM		120
			PRESS. SENS. HILIM		120
			LEVEL MODE		78
			LIN. MEASURAND		79
			HEIGHT UNIT		79
			CUSTOMER UNIT H		79
			CUSTOMER UNIT H		80

Level 1	Level 2	Level 3	Level 4	Measuring mode, Level mode or Level selection	See page
			CALIBRATION MODE		82
			DENSITY UNIT		83
			ADJUST DENSITY		83
			100% POINT		86
			ZERO POSITION		86
			SET LRV		86
			SET URV		86
			DAMPING VALUE		86
		BASIC SETUP	PRESS. ENG. UNIT	Level Standard LEVEL MODE = Linear, LIN. MEASURAND = **% (Height)** CALIBRATION MODE = **Wet**	77
			CUSTOMER UNIT P		78
			CUST. UNIT FACT. P		78
			PRESS. SENS. LOLIM		120
			PRESS. SENS. HILIM		120
			LEVEL MODE		78
			LIN. MEASURAND		79
			CALIBRATION MODE		82
			EMPTY CALIB.		82
			EMPTY PRESSURE		83
			FULL CALIB.		83
			FULL PRESSURE		83
			SET LRV		86
			SET URV		86
			DAMPING VALUE		86
		BASIC SETUP	PRESS. ENG. UNIT	Level Standard LEVEL MODE = Linear, LIN. MEASURAND = **Height** CALIBRATION MODE = **Dry**	77
			CUSTOMER UNIT P		78
			CUST. UNIT FACT. P		78
			PRESS. SENS. LOLIM		120
			PRESS. SENS. HILIM		120
			LEVEL MODE		78
			LIN. MEASURAND		79
			HEIGHT UNIT		79
			CUSTOMER UNIT H		79
			CUSTOMER UNIT H		80
			CALIBRATION MODE		82
			DENSITY UNIT		83
			ADJUST DENSITY		83
			ZERO POSITION		86
			SET LRV		86
			SET URV		86
			DAMPING VALUE		86

Level 1	Level 2	Level 3	Level 4	Measuring mode, Level mode or Level selection	See page
		BASIC SETUP	PRESS. ENG. UNIT	Level Standard LEVEL MODE = Linear, LIN. MEASURAND = **Height** CALIBRATION MODE = **Wet**	77
			CUSTOMER UNIT P		78
			CUST. UNIT FACT. P		78
			PRESS. SENS. LOLIM		120
			PRESS. SENS. HILIM		120
			LEVEL MODE		78
			LIN. MEASURAND		79
			HEIGHT UNIT		85
			CUSTOMER UNIT H		79
			CUSTOMER UNIT H		80
			CALIBRATION MODE		82
			EMPTY CALIB.		82
			EMPTY PRESSURE		83
			FULL CALIB.		83
			FULL PRESSURE		83
			ADJUST DENSITY		83
			SET LRV		86
			SET URV		86
			DAMPING VALUE		86
		BASIC SETUP	PRESS. ENG. UNIT	Level Standard LEVEL MODE = Linear, LIN. MEASURAND = **Volume** CALIBRATION MODE = **Dry**	77
			CUSTOMER UNIT P		78
			CUST. UNIT FACT. P		78
			PRESS. SENS. LOLIM		120
			PRESS. SENS. HILIM		120
			LEVEL MODE		78
			LIN. MEASURAND		79
			HEIGHT UNIT		79
			UNIT VOLUME		80
			CUSTOMER UNIT V		80
			CUST. UNIT FACT. V		81
			CALIBRATION MODE		82
			DENSITY UNIT		83
			ADJUST DENSITY		83
			UNIT VOLUME		84
			CUSTOMER UNIT V		84
			CUST. UNIT FACT. V		84
			TANK VOLUME		84
			TANK HEIGHT		85
			ZERO POSITION		86
			SET LRV		86
			SET URV		86
			DAMPING VALUE		86

Level 1	Level 2	Level 3	Level 4	Measuring mode, Level mode or Level selection	See page
		BASIC SETUP	PRESS. ENG. UNIT	Level Standard LEVEL MODE = Linear, LIN. MEASURAND = **Volume** CALIBRATION MODE = **Wet**	77
			CUSTOMER UNIT P		78
			CUST. UNIT FACT. P		78
			PRESS. SENS. LOLIM		120
			PRESS. SENS. HILIM		120
			LEVEL MODE		78
			LIN. MEASURAND		79
			UNIT VOLUME		84
			CUSTOMER UNIT V		84
			CUST. UNIT FACT. V		84
			CALIBRATION MODE		82
			EMPTY CALIB.		82
			EMPTY PRESSURE		83
			FULL CALIB.		83
			FULL PRESSURE		83
			SET LRV		86
			SET URV		86
			DAMPING VALUE		86
		BASIC SETUP	PRESS. ENG. UNIT	Level Standard LEVEL MODE = Linear, LIN. MEASURAND = **Mass** CALIBRATION MODE = **Dry**	77
			CUSTOMER UNIT P		78
			CUST. UNIT FACT. P		78
			PRESS. SENS. LOLIM		120
			PRESS. SENS. HILIM		120
			LEVEL MODE		78
			LIN. MEASURAND		79
			HEIGHT UNIT		85
			MASS UNIT		81
			CUSTOMER UNIT M		81
			CUST. UNIT FACT. M		82
			CALIBRATION MODE		82
			DENSITY UNIT		83
			ADJUST DENSITY		83
			UNIT VOLUME		84
			CUSTOMER UNIT V		84
			CUST. UNIT FACT. V		84
			TANK VOLUME		84
			TANK HEIGHT		85
			ZERO POSITION		86
			SET LRV		86
			SET URV		86
			DAMPING VALUE		86

Level 1	Level 2	Level 3	Level 4	Measuring mode, Level mode or Level selection	See page
		BASIC SETUP	PRESS. ENG. UNIT	Level Standard LEVEL MODE = Linear, LIN. MEASURAND = **Mass** CALIBRATION MODE = **Wet**	77
			CUSTOMER UNIT P		78
			CUST. UNIT FACT. P		78
			PRESS. SENS. LOLIM		120
			PRESS. SENS. HILIM		120
			LEVEL MODE		78
			LIN. MEASURAND		79
			MASS UNIT		81
			CUSTOMER UNIT M		81
			CUST. UNIT FACT. M		82
			CALIBRATION MODE		82
			EMPTY CALIB.		82
			EMPTY PRESSURE		83
			FULL CALIB.		83
			FULL PRESSURE		83
			SET LRV		86
			SET URV		86
			DAMPING VALUE		86
		BASIC SETUP	PRESS. ENG. UNIT	Level Standard LEVEL MODE = Pressure Linearized LIN. MEASURAND = **Pressure and %**	70
			CUSTOMER UNIT P		71
			CUST. UNIT FACT. P		71
			PRESS. SENS. LOLIM		120
			PRESS. SENS. HILIM		120
			LEVEL MODE		78
			LINd. MEASURAND		87
			HYDR. PRESS MIN.		89
			HYDR. PRESS MAX.		89
			DAMPING VALUE		89
		BASIC SETUP	PRESS. ENG. UNIT	Level Standard LEVEL MODE = Pressure Linearized LIN. MEASURAND = **Pressure and Volume**	70
			CUSTOMER UNIT P		71
			CUST. UNIT FACT. P		71
			PRESS. SENS. LOLIM		120
			PRESS. SENS. HILIM		120
			LEVEL MODE		78
			LINd. MEASURAND		87
			UNIT VOLUME		87
			CUSTOMER UNIT V		87
			CUST. UNIT FACT V		88
			HYDR. PRESS MIN.		89
			HYDR. PRESS MAX.		89
			DAMPING VALUE		89

Level 1	Level 2	Level 3	Level 4	Measuring mode, Level mode or Level selection	See page
		BASIC SETUP	PRESS. ENG. UNIT	Level Standard LEVEL MODE = Pressure Linearized LIN. MEASURAND = **Pressure and Mass**	70
			CUSTOMER UNIT P		71
			CUST. UNIT FACT. P		71
			PRESS. SENS. LOLIM		120
			PRESS. SENS. HILIM		120
			LEVEL MODE		78
			LINd. MEASURAND		87
			MASS UNIT		88
			CUSTOMER UNIT M		88
			CUST. UNIT FACT. M		89
			HYDR. PRESS MIN.		89
			HYDR. PRESS MAX.		89
			DAMPING VALUE		89
		BASIC SETUP	PRESS. ENG. UNIT	Level Standard LEVEL MODE = Height Linearized COMB. MEASURAND = **% Height and %** CALIBRATION MODE = **Dry**	74
			CUSTOMER UNIT P		74
			CUST. UNIT FACT. P		74
			PRESS. SENS. LOLIM		120
			PRESS. SENS. HILIM		120
			LEVEL MODE		78
			COMB. MEASURAND		90
			HEIGHT UNIT		95
			CUSTOMER UNIT H		95
			CUSTOMER UNIT H		95
			LEVEL MIN.		93
			LEVEL MAX.		93
			CALIBRATION MODE		93
			DENSITY UNIT		94
			ADJUST DENSITY		94
			100% POINT		96
			ZERO POSITION		96
			DAMPING VALUE		96
		BASIC SETUP	PRESS. ENG. UNIT	Level Standard LEVEL MODE = Height Linearized COMB. MEASURAND = **% Height and %** CALIBRATION MODE = **Wet**	74
			CUSTOMER UNIT P		74
			CUST. UNIT FACT. P		74
			PRESS. SENS. LOLIM		120
			PRESS. SENS. HILIM		120
			LEVEL MODE		78
			COMB. MEASURAND		90
			LEVEL MIN.		93
			LEVEL MAX.		93
			CALIBRATION MODE		93
			EMPTY CALIB.		93
			EMPTY PRESSURE		94

Level 1	Level 2	Level 3	Level 4	Measuring mode, Level mode or Level selection	See page
			FULL CALIB.		94
			FULL PRESSURE		94
			DAMPING VALUE		96
		BASIC SETUP	PRESS. ENG. UNIT	Level Standard LEVEL MODE = Height Linearized COMB. MEASURAND = **% Height and Volume** CALIBRATION MODE = **Dry**	74
			CUSTOMER UNIT P		74
			CUST. UNIT FACT. P		74
			PRESS. SENS. LOLIM		120
			PRESS. SENS. HILIM		120
			LEVEL MODE		78
			COMB. MEASURAND		90
			HEIGHT UNIT		95
			CUSTOMER UNIT H		95
			CUST. UNIT FACT. H		95
			UNIT VOLUME		91
			CUSTOMER UNIT V		91
			CUST. UNIT FACT. V		91
			LEVEL MIN.		93
			LEVEL MAX.		93
			CALIBRATION MODE		93
			DENSITY UNIT		94
			ADJUST DENSITY		94
			100% POINT		96
			ZERO POSITION		96
			DAMPING VALUE		96
		BASIC SETUP	PRESS. ENG. UNIT	Level Standard LEVEL MODE = Height Linearized COMB. MEASURAND = **% Height and Volume** CALIBRATION MODE = **Wet**	74
			CUSTOMER UNIT P		74
			CUST. UNIT FACT. P		74
			PRESS. SENS. LOLIM		120
			PRESS. SENS. HILIM		120
			LEVEL MODE		78
			COMB. MEASURAND		90
			UNIT VOLUME		91
			CUSTOMER UNIT V		91
			CUST. UNIT FACT. V		91
			LEVEL MIN.		93
			LEVEL MAX.		93
			CALIBRATION MODE		93
			EMPTY CALIB.		93
			EMPTY PRESSURE		94
			FULL CALIB.		94
			FULL PRESSURE		94
			DAMPING VALUE		96

Level 1	Level 2	Level 3	Level 4	Measuring mode, Level mode or Level selection	See page
		BASIC SETUP	PRESS. ENG. UNIT	Level Standard LEVEL MODE = Height Linearized COMB. MEASURAND = **% Height and Mass** CALIBRATION MODE = **Dry**	74
			CUSTOMER UNIT P		74
			CUST. UNIT FACT. P		74
			PRESS. SENS. LOLIM		120
			PRESS. SENS. HILIM		120
			LEVEL MODE		78
			COMB. MEASURAND		90
			HEIGHT UNIT		95
			CUSTOMER UNIT H		95
			CUST. UNIT FACT. H		95
			MASS UNIT		92
			CUSTOMER UNIT M		92
			CUST. UNIT FACT. M		92
			LEVEL MIN.		93
			LEVEL MAX.		93
			CALIBRATION MODE		93
			DENSITY UNIT		94
			ADJUST DENSITY		94
			100% POINT		96
			ZERO POSITION		96
			DAMPING VALUE		96
		BASIC SETUP	PRESS. ENG. UNIT	Level Standard LEVEL MODE = Height Linearized COMB. MEASURAND = **% Height and Mass** CALIBRATION MODE = **Wet**	74
			CUSTOMER UNIT P		74
			CUST. UNIT FACT. P		74
			PRESS. SENS. LOLIM		120
			PRESS. SENS. HILIM		120
			LEVEL MODE		78
			COMB. MEASURAND		90
			MASS UNIT		92
			CUSTOMER UNIT M		92
			CUST. UNIT FACT. M		92
			LEVEL MIN.		93
			LEVEL MAX.		93
			CALIBRATION MODE		93
			EMPTY CALIB.		93
			EMPTY PRESSURE		94
			FULL CALIB.		94
			FULL PRESSURE		94
			DAMPING VALUE		96

Level 1	Level 2	Level 3	Level 4	Measuring mode, Level mode or Level selection	See page
		BASIC SETUP	PRESS. ENG. UNIT	Level Standard LEVEL MODE = Height Linearized COMB. MEASURAND = **Height and Volume** CALIBRATION MODE = **Dry**	74
			CUSTOMER UNIT P		90
			CUST. UNIT FACT. P		90
			PRESS. SENS. LOLIM		120
			PRESS. SENS. HILIM		120
			LEVEL MODE		78
			COMB. MEASURAND		90
			HEIGHT UNIT		90
			CUSTOMER UNIT H		90
			CUST. UNIT FACT. H		90
			UNIT VOLUME		91
			CUSTOMER UNIT V		91
			CUST. UNIT FACT. V		91
			LEVEL MIN.		93
			LEVEL MAX.		93
			CALIBRATION MODE		93
			DENSITY UNIT		94
			ADJUST DENSITY		94
			ZERO POSITION		96
			DAMPING VALUE		96
		BASIC SETUP	PRESS. ENG. UNIT	Level Standard LEVEL MODE = Height Linearized COMB. MEASURAND = **Height and Volume** CALIBRATION MODE = **Wet**	74
			CUSTOMER UNIT P		90
			CUST. UNIT FACT. P		90
			PRESS. SENS. LOLIM		120
			PRESS. SENS. HILIM		120
			LEVEL MODE		78
			COMB. MEASURAND		90
			HEIGHT UNIT		90
			CUSTOMER UNIT H		90
			CUST. UNIT FACT. H		90
			UNIT VOLUME		91
			CUSTOMER UNIT V		91
			CUST. UNIT FACT. V		91
			LEVEL MIN.		93
			LEVEL MAX.		93
			CALIBRATION MODE		93
			EMPTY CALIB.		93
			EMPTY PRESSURE		94
			FULL CALIB.		94
			FULL PRESSURE		94
			ADJUST DENSITY		94
			DAMPING VALUE		96

Level 1	Level 2	Level 3	Level 4	Measuring mode, Level mode or Level selection	See page
		BASIC SETUP	PRESS. ENG. UNIT	Level Standard LEVEL MODE = Height Linearized COMB. MEASURAND = **Height and Mass** CALIBRATION MODE = **Dry**	74
			CUSTOMER UNIT P		90
			CUST. UNIT FACT. P		90
			PRESS. SENS. LOLIM		120
			PRESS. SENS. HILIM		120
			LEVEL MODE		78
			COMB. MEASURAND		90
			HEIGHT UNIT		90
			CUSTOMER UNIT H		90
			CUSTOMER UNIT H		90
			MASS UNIT		92
			CUSTOMER UNIT M		92
			CUST. UNIT FACT. M		92
			LEVEL MIN.		93
			LEVEL MAX.		93
			CALIBRATION MODE		93
			DENSITY UNIT		94
			ADJUST DENSITY		94
			ZERO POSITION		96
			DAMPING VALUE		96
		BASIC SETUP	PRESS. ENG. UNIT	Level Standard LEVEL MODE = Height Linearized COMB. MEASURAND = **Height and Mass** CALIBRATION MODE = **Wet**	74
			CUSTOMER UNIT P		90
			CUST. UNIT FACT. P		90
			PRESS. SENS. LOLIM		120
			PRESS. SENS. HILIM		120
			LEVEL MODE		78
			COMB. MEASURAND		90
			HEIGHT UNIT		90
			CUSTOMER UNIT H		90
			CUSTOMER UNIT H		90
			MASS UNIT		92
			CUSTOMER UNIT M		92
			CUST. UNIT FACT. M		92
			LEVEL MIN.		93
			LEVEL MAX.		93
			CALIBRATION MODE		93
			EMPTY CALIB.		93
			EMPTY PRESSURE		94
			FULL CALIB.		94
			FULL PRESSURE		94
			ADJUST DENSITY		94
			DAMPING VALUE		96

Level 1	Level 2	Level 3	Level 4	Measuring mode, Level mode or Level selection	See page
		BASIC SETUP	PRESS. ENG. UNIT	Level Standard LEVEL MODE = Height Linearized COMB. MEASURAND = **Height and %** CALIBRATION MODE = **Dry**	74
			CUSTOMER UNIT P		90
			CUST. UNIT FACT. P		90
			PRESS. SENS. LOLIM		120
			PRESS. SENS. HILIM		120
			LEVEL MODE		78
			COMB. MEASURAND		90
			HEIGHT UNIT		90
			CUSTOMER UNIT H		90
			CUSTOMER UNIT H		90
			LEVEL MIN		93
			LEVEL MAX		93
			CALIBRATION MODE		93
			DENSITY UNIT		94
			ADJUST DENSITY		94
			ZERO POSITION		96
			DAMPING VALUE		96
		BASIC SETUP	PRESS. ENG. UNIT	Level Standard LEVEL MODE = Height Linearized COMB. MEASURAND = **Height and %** CALIBRATION MODE = **Wet**	74
			CUSTOMER UNIT P		90
			CUST. UNIT FACT. P		90
			PRESS. SENS. LOLIM		120
			PRESS. SENS. HILIM		120
			LEVEL MODE		78
			COMB. MEASURAND		90
			HEIGHT UNIT		90
			CUSTOMER UNIT H		90
			CUSTOMER UNIT H		90
			LEVEL MIN.		93
			LEVEL MAX.		93
			CALIBRATION MODE		93
			EMPTY CALIB.		93
			EMPTY PRESSURE		94
			FULL CALIB.		94
			FULL PRESSURE		94
			ADJUST DENSITY		94
			DAMPING VALUE		96
		BASIC SETUP	PRESS. ENG. UNIT	Flow	97
			CUSTOMER UNIT P		97
			CUST. UNIT FACT. P		97
			PRESS. SENS. LOLIM		120
			PRESS. SENS. HILIM		120
			LINEAR/SQROOT		114
			MIN PRESS. FLOW		67

Level 1	Level 2	Level 3	Level 4	Measuring mode, Level mode or Level selection	See page
			MAX PRESS. FLOW		100
			FLOW-MEAS TYPE		98
			UNIT FLOW		98
			CUSTOMER UNIT F		99
			CUST. UNIT FACT. F		99
			MAX. DURCHFLUSS		100
			LOW FLOW CUT-OFF		103
			SET. L. FL. CUT-OFF		103
			DAMPING VALUE		100
		EXTENDED SETUP	TEMP. ENG. UNIT	Flow	100
			TEMP. ENG. UNIT	Level	101
			DENSITY UNIT	Level Standard	101
			ADJUST DENSITY		101
			PROCESS DENSITY		101
			SET LRV	Pressure Linearized, Height Linearized	102
			SET URV	Pressure Linearized, Height Linearized	102
			DENSITY UNIT	Level Easy Pressure	101
			ADJUST DENSITY		101
			PROCESS DENSITY		101
			ADJUST DENSITY	Level Easy Height	101
			DENSITY UNIT		101
			PROCESS DENSITY		101
			TEMP. ENG. UNIT	Flow	103
			SET LRV		103
			SET URV		104
		LINEARIZATION	TANK CONTENT MIN	Pressure Linearized, Height Linearized	107
			TANK CONTENT MAX		107
			TABLE SELECTION		107
			LIN. EDIT MODE		107
			EDITOR TABLE		108
			LINE-NUMB:		108
			X-VAL (Manual):		108
			X-VAL (Semiauto.):		108
			Y-VAL:		108
			ACTIV LIN.TAB.Y		109
			ACTIV LIN.TAB.X		109
			TANK DESCRIPTION		109
			TABLE ACTIVATE		109
		TOTALISER SETUP	TOTAL.1 ENG.UNIT	Flow	110
			TOT. 1 USER UNIT		110
			FACT.U.U.TOTAL.1		110

Level 1	Level 2	Level 3	Level 4	Measuring mode, Level mode or Level selection	See page
			NEG. FLOW TOT. 1		110
			RESET TOTALISER1		111
			TOTAL.2 ENG.UNIT		111
			TOT. 2 UNIT TEXT		111
			FACT.U.U.TOTAL.2		111
			NEG. FLOW TOT. 2		111
	SAFETY CONFIRM. See Safety Manual for Deltabar S (SD00189), Cerabar S (SD00190) or Deltapilot S (SD00213P).				
	DISPLAY	MAIN LINE CONT.		all	111
		LANGUAGE			62
		MAIN DATA FORMAT			112
		ALTERNATE DATA			112
		DISPLAY CONTRAST			112
		DIGITS SET			112
	OUTPUT	OUTPUT CURRENT		all	112
		CURRENT CHARACT.			113
		OUTPUT FAIL MODE			113
		ALT.CURR.OUTPUT			114
		SET MAX. ALARM			114
		SET MIN. CURRENT			114
		LINEAR/SQROOT		Pressure and Flow	114
		ASSIGN CURRENT		Height Linearized	114
	TRANSMITTER DATA	**HART DATA**	HART VERSION	all	114
			CURRENT MODE		115
			BUS ADDRESS		115
			DEVICE TYPE		115
			DEVICE REVISION		115
			BURST MODE		115
			BURST OPTION		115
			PREAMBLE NUMBER		116
			MANUFACTOR ID		116
			MESSAGE		116
			HART DATE		116
			HART PRIMARY VALUE IS		116
			PRIMARY VALUE		116
			SECONDARY VAL.IS		116
			SECONDARY VALUE		116
			THIRD VALUE IS		116
			THIRD VALUE		116
			4TH VALUE IS		117
			4TH VALUE		117
		TRANSMITTER DATA	DEVICE SERIAL No	all	117
			ELECTR.SERIAL No		117

Level 1	Level 2	Level 3	Level 4	Measuring mode, Level mode or Level selection	See page
			CUST. TAG NUMBER		117
			LONG TAG NUMBER		117
			ADDITIONAL INFO.		117
			DEVICE DESIGN.		117
			HARDWARE REV.		117
			SOFTWARE VERSION		117
			CONFIG RECORDER		117
			PCB TEMPERATURE		117
			Allowed Min.TEMP		117
			Allowed Max.TEMP		117
			DIP STATUS		118
		PROCESS CONNECTION	Pmax PROC. CONN.	all	118
			PROC.CONN.TYPE		118
			MAT.PROC.CONN. +		118
			MAT.PROC.CONN. -		118
			SEAL TYPE		119
			BOLTS MATERIAL		119
			NUTS MATERIAL		119
			DRAIN VENT MAT.		119
			DRAIN VENT POS.		119
			THREAD PROCESS		119
			MOUNTING THREAD		119
			REMOTE SEAL +		119
			REMOTE SEAL -		119
			DIAPHRAG.MAT. +		119
			DIAPHRAG.MAT. -		119
			NR OF CHEM SEAL		120
			FILL FLUID		120
		SENSOR DATA	SENSOR SER. No.	all	120
			PRESS.SENS LOLIM		120
			PRESS.SENS HILIM		120
			MINIMUM SPAN		120
			SENSOR MEAS.TYPE		120
			MAT. MEMBRANE		120
			FILLING FLUID		120
			Tmin SENSOR		120
			Tmax SENSOR		120
			SENS H/WARE REV		120
	PROCESS INFO	PROCESS VALUES	MEASURED VALUE	Pressure	121
			PRESSURE		121
			CORRECTED PRESS.		121
			SENSOR PRESSURE		121
			SENSOR TEMP.		121

Level 1	Level 2	Level 3	Level 4	Measuring mode, Level mode or Level selection	See page
			MEAS. VAL. TREND		121
			MEASURED VALUE	Level	122
			PRESSURE		122
			CORRECTED PRESS.		122
			SENSOR PRESSURE		122
			SENSOR TEMP.		122
			MEAS. VAL. TREND		122
			LEVEL BEFORE LIN		122
			TANK CONTENT	Pressure Linearized, Height Linearized	122
			MEASURED VALUE	Flow	122
			PRESSURE		123
			CORRECTED PRESS.		123
			SENSOR PRESSURE		123
			SENSOR TEMP.		123
			MEAS. VAL. TREND		123
			SUPPRESSED FLOW		123
			TOTALIZER 1		123
			TOTAL.1 OVERFLOW		123
			TOTALIZER 2		123
			TOTAL.2 OVERFLOW		123
		PEAK HOLD INDIC.	COUNTER:P > Pmax	all	123
			COUNTER:P < Pmin		123
			MAX. MEAS.PRESS.		123
			MIN. MEAS.PRESS.		123
			COUNTER:T > Tmax		124
			COUNTER:T < Tmin		124
			MAX. MEAS.TEMP.		124
			MIN. MEAS.TEMP.		124
			PCB COUNT:T>Tmax		124
			PCB COUNT:T<Tmin		124
			PCB MAX. TEMP.		124
			PCB MIN. TEMP.		124
			RESET PEAKHOLD		124
	OPERATION	ENTER RESET CODE		all	124
		OPERATING HOURS			124
		INSERT PIN No			125
		HistoROM AVAIL.			125
		DOWNLOAD SELECT.			125
		HistoROM CONTROL			125
	DIAGNOSTICS	**SIMULATION**	SIMULATION MODE	all	126
			SIM. PRESSURE		126
			SIM.FLOW VALUE		126

Level 1	Level 2	Level 3	Level 4	Measuring mode, Level mode or Level selection	See page
			SIM. LEVEL		126
			SIM. TANK CONT.		126
			SIM. CURRENT		126
			SIM. ERROR NO.		127
		MESSAGES	ALARM STATUS	all	127
			LAST DIAG. CODE		127
			ACK. ALARM MODE		127
			ACK. ALARM		127
			RESET ALL ALARMS		128
			ERROR No.		128
			SELECT ALARMTYPE (Overview alarms)		128 (131)
			ALARM DELAY		128
			ALARM DISPL.TIME		128
		USER LIMITS	PminALARM WINDOW	all	129
			PmaxALARM WINDOW		129
			TminALARM WINDOW		129
			TmaxALARM WINDOW		129
	SERVICE	**System2**	CURR. TRIM 4mA	all	129
			CURR. TRIM 20mA		130
			OFFSET 4mA TRIM		130
			OFFSET 20mA TRIM		130

9 Description of parameters

- The following tables list all the parameters as per the menu structure of the on-site display. Each table corresponds to a function group in the menu tree.
- The menu structure for on-site operation and the digital communication are different.
- In the operating program or HART handheld terminal, additional parameters are displayed. These parameters are marked accordingly.
- The menu path of the on-site display is indicated in the header of each table. You can use this path to get to the parameters in question.
- The menu has a different structure depending on the measuring mode selected. This means that some function groups are only displayed for one measuring mode, e.g. the "LINEARISATION" function group for the "Level" measuring mode. If certain requirements have to be met for a function group, these are listed in the first row of the table.
- Some parameters are only displayed if other parameters are appropriately configured. For example, the EMPTY CALIB. parameter is not displayed in the Quick Setup menu ("Level" measuring mode) unless the "Linear" option was selected for the LEVEL MODE parameter and the "Wet" option was selected for the CALIBRATION MODE parameter. There is a comment in the parameter description here stating: Note: prerequisite: LEVEL MODE = Linear and CALIBRATION MODE = Wet.
- Parameter names are written in upper case in the text.
- In the "Parameter name" column, the unique identification number (ID) of the parameter is indicated in brackets. This ID only appears on the on-site display.

Table 1: GROUP SELECTION → LANGUAGE – on-site operation

Parameter name	Description
LANGUAGE (079) Selection	Select the menu language for the on-site display. ▪ In the operating program and in the HART handheld terminal, the LANGUAGE parameter is arranged in the DISPLAY function group. ▪ Select the menu language for FieldCare via the "Extras" menu → "Options" → "Display" tab → "Tool language" area. **Factory setting:** English

Table 2: GROUP SELECTION → MEASURING MODE – on-site operation

Parameter name	Description
MEASURING MODE (389) Selection	Select the measuring mode. The operating menu is structured according to the selected measuring mode. **⚠ WARNING** **Changing the measuring mode can affect the adjustment data!** This situation can result in product overflow. ▶ Check calibration data when the measuring mode is changed. **Options:** ▪ Pressure ▪ Level ▪ Deltabar S: Flow **Factory setting:** ▪ Cerabar S and Deltabar S: Pressure ▪ Deltapilot S: Level

Table 2: GROUP SELECTION → MEASURING MODE – on-site operation	
Parameter name	**Description**
LEVEL SELECTION (020) Options	Select level mode. **Prerequisite:** ▪ MEASURING MODE = Level ▪ In the "Level Easy Pressure" and "Level Easy Height" level modes, the values entered are not tested as extensively as in the "Level Standard" level mode. The values entered for EMPTY CALIB./FULL CALIB., EMPTY PRESSURE/FULL PRESSURE, EMPTY HEIGHT/FULL HEIGHT and SET LRV/SET URV must have a minimum interval of 1% for the "Level Easy Pressure" and "Level Easy Height" level modes. The value will be rejected with a warning message if the values are too close together. Further limit values are not checked; i.e. the values entered must be appropriate for the sensor and the measuring task so that the measuring device can measure correctly. → For an overview of the different level modes and types, see Page 8, Section 5.1 "Overview of level measurement". ▪ The "Level Easy Pressure" and "Level Easy Height" level modes encompass fewer parameters than the "Level Standard" mode and are used for quick and easy configuration of a level application. ▪ Customer-specific units of fill level, volume and mass or a linearization table may only be entered in the "Level Standard" level mode. ▪ Where the device is intended for use as a subsystem in a safety function (SIL), a "Device configuration with enhanced parameter security" (SAFETY CONFIRM.) is only possible for the "Level" operating mode in the "Level Easy Pressure" level mode. All parameters previously entered are checked after a password is entered. Once the "Level Easy Height" or "Level Standard" has been selected, the configuration will first have to be reset to the ex-works setting using the RESET parameter (menu path: (GROUP SELECTION →) OPERATING MENU → OPERATION) using the reset code "7864". → For additional information, see the Safety Manual for Deltabar S (SD00189), Cerabar S (SD00190) or Deltapilot S (SD00213P). **Options:** ▪ Level Easy Pressure Specify two pressure-level value pairs for this level mode. The pressure measured value is converted directly to the unit which is selected via the OUTPUT UNIT parameter (→ Page 71). Two calibration modes, "Wet" and "Dry", are available. – Wet calibration takes place by filling and emptying the container. In the case of two different levels, the level, volume, mass or percentage value entered is assigned to the pressure measured at this point in time. – Dry calibration is a theoretical calibration. For this calibration, specify two pressure-level value pairs via the EMPTY CALIB., EMPTY PRESSURE, FULL CALIB. and FULL PRESSURE parameters. → Parameter descriptions see Page 72 ff. ▪ Level Easy Height For this level mode, specify a height unit, density and two height-level value pairs. The pressure measured value is converted to a height value using the density entered and the height unit. Two calibration modes, "Wet" and "Dry", are available. – Wet calibration takes place by filling and emptying the container. In the case of two different levels, the level, volume, mass or percentage value entered is assigned to the converted height value. – Dry calibration is a theoretical calibration. For this calibration, specify two height-level value pairs via the EMPTY CALIB., EMPTY HEIGHT, FULL CALIB. and FULL HEIGHT parameters. → Parameter descriptions see Page 76 ff. ▪ Level standard Once you have selected this level mode, you can use the LEVEL MODE parameter (→ Page 78) to choose between "Linear", "Pressure Linearized" and "Height Linearized". **Factory setting:** Level Easy Pressure
→ For LEVEL SELECTION = "Level Easy Pressure" see Page 70, Table 8. → For LEVEL SELECTION = "Level Easy Height" see Page 73, Table 9. → For LEVEL SELECTION = "Level standard" see Page 77, Table 10.	

Table 3: (GROUP SELECTION →) QUICK SETUP "Pressure"	
Parameter name	**Description**
This menu displays the most important parameters for the "Pressure" measuring mode. **Prerequisite:** ▪ MEASURING MODE = Pressure	
POS. ZERO ADJUST (685) Entry	Position adjustment – the pressure difference between zero (set point) and the measured pressure need not be known. Due to the orientation of the device, there may be a shift in the measured value, i.e. for example, when the container is empty, the MEASURED VALUE parameter does not display zero. **Example:** – MEASURED VALUE = 2.2 mbar (0.033 psi) – Correct the MEASURED VALUE via the POS. ZERO ADJUST parameter with the "Confirm" option. This means that you are assigning the value 0.0 to the pressure present. – MEASURED VALUE (after pos. zero adjust) = 0.0 mbar – The current value is also corrected. The CALIB. OFFSET parameter displays the resulting pressure difference (offset) by which the MEASURED VALUE was corrected. **Prerequisite:** ▪ This parameter is displayed for Deltabar S, Cerabar S with gauge pressure sensor and Deltapilot S. **Options:** ▪ Abort ▪ Confirm **Factory setting:** Abort
POS. INPUT VALUE (563) Entry	Position adjustment – the pressure difference between zero (set point) and the measured pressure need not be known. To correct the pressure difference, you need a reference measurement value (e. g. from a reference device). Due to the orientation of the device, there may be a shift in the measured value, i.e. for example, when the container is empty, the MEASURED VALUE parameter does not display zero or the desired value. **Example:** – MEASURED VALUE = 0.5 mbar (0.0075 psi) – For the POS. INPUT VALUE parameter, specify the desired set point for the MEASURED VALUE, e.g. 2 mbar. (MEASURED $VALUE_{new}$ = POS. INPUT VALUE) – MEASURED VALUE (after entry for POS. INPUT VALUE) = 2.0 mbar (0.03 psi) – The CALIB. OFFSET parameter displays the resulting pressure difference (offset) by which the MEASURED VALUE was corrected. CALIB. OFFSET = MEASURED $VALUE_{old}$ – POS. INPUT VALUE, here: CALIB. OFFSET = 0.5 mbar (0.0075 psi) – 2.0 mbar (0.03 psi) = – 1.5 mbar (0.0225 psi)) – The current value is also corrected. **Prerequisite:** ▪ This parameter is displayed for Cerabar S with absolute pressure sensors. **Factory setting:** 0.0
SET LRV (245) Entry	Set lower range value – without reference pressure. Enter pressure value for the lower current value (4 mA). **Factory setting:** 0.0 or as per order specifications
SET URV (246) Entry	Set upper range value – without reference pressure. Enter pressure value for the upper current value (20 mA). **Factory setting:** High sensor limit (→ see PRESS. SENS HILIM, Page 120) or as per order specifications

Table 3: (GROUP SELECTION →) QUICK SETUP "Pressure"	
Parameter name	**Description**
DAMPING VALUE (247) Entry	Enter damping time (time constant τ). The damping affects the speed at which all subsequent elements, such as the on-site display, measured value and current output react to a change in the pressure. **Input range:** 0.0...999.0 s **Factory setting:** 2.0 s or as per order specifications

Table 4: (GROUP SELECTION →) QUICK SETUP "Level"	
Parameter name	**Description**
This menu displays the most important parameters for the "Level" measuring mode. **Prerequisite**: ▪ MEASURING MODE = Level	
POS. ZERO ADJUST (685) Entry	Position adjustment – the pressure difference between zero (set point) and the measured pressure need not be known. Due to the orientation of the device, there may be a shift in the measured value, i.e. when the container is empty, the MEASURED VALUE parameter does not display zero. **Example:** – MEASURED VALUE = 2.2 mbar (0.033 psi) – Correct the MEASURED VALUE via the POS. ZERO ADJUST parameter with the "Confirm" option. This means that you are assigning the value 0.0 to the pressure present. – MEASURED VALUE (after pos. zero adjust) = 0.0 mbar – The current value is also corrected. The CALIB. OFFSET parameter displays the resulting pressure difference (offset) by which the MEASURED VALUE was corrected. **Prerequisite:** ▪ This parameter is displayed for Deltabar S, Cerabar S with gauge pressure sensor and Deltapilot S. **Options:** ▪ Abort ▪ Confirm **Factory setting:** 0.0
POS. INPUT VALUE (563) Entry	Position adjustment – the pressure difference between zero (set point) and the measured pressure need not be known. To correct the pressure difference, you need a reference measurement value (e. g. from a reference device). Due to the orientation of the device, there may be a shift in the measured value, i.e. when the container is empty, the MEASURED VALUE parameter does not display zero or the desired value. **Example:** – MEASURED VALUE = 0.5 mbar (0.0075 psi) – For the POS. INPUT VALUE parameter, specify the desired set point for the MEASURED VALUE, e.g. 2.0 mbar (0.03 psi). (MEASURED VALUE $_{new}$ = POS. INPUT VALUE) – MEASURED VALUE (after entry for POS. INPUT VALUE) = 2.0 mbar (0.03 psi) – The CALIB. OFFSET parameter displays the resulting pressure difference (offset) by which the MEASURED VALUE was corrected. CALIB. OFFSET = MEASURED VALUE$_{old}$ – POS. INPUT VALUE, here: CALIB. OFFSET = 0.5 mbar (0.0075 psi) – 2.0 mbar (0.03 psi) = – 1.5 mbar (0.0225 psi)) – The current value is also corrected. **Prerequisite:** ▪ This parameter is displayed for Cerabar S with absolute pressure sensors. **Factory setting:** 0.0

Table 4: (GROUP SELECTION →) QUICK SETUP "Level"	
Parameter name	**Description**
EMPTY CALIB. (314)/ (010) Entry	Enter level value for the lower calibration point (container empty). The container is either empty or part full. By entering a value for this parameter, you are assigning a level value to the pressure present at the device. **Prerequisite:** ▪ LEVEL SELECTION = Level Easy Pressure (→ see also Page 63), CALIBRATION MODE = Wet (→ see also Page 72) ▪ LEVEL SELECTION = Level Standard (→ see also Page), LEVEL MODE = Linear (→ see also Page 78), CALIBRATION MODE = Wet (→ see also Page 82) For this parameter, the on-site display shows the level value to be entered and the pressure present at the device. In order for the level value to be saved together with the pressure present at the device, the entry field for the level value must first be activated using the ⊞ or ⊟ key before confirming with the Ⓔ key. This applies also if the level value is to remain unchanged. **Factory setting:** 0.0
FULL CALIB. (315)/(004) Entry	Enter level value for the upper calibration point (container full). The container is either completely or almost full. By entering a value for this parameter, you are assigning a level value to the pressure present at the device. **Prerequisite:** ▪ LEVEL SELECTION = Level Easy Pressure (→ see also Page 63), CALIBRATION MODE = Wet (→ see also Page 72) ▪ LEVEL SELECTION = Level Standard, LEVEL MODE = Linear (→ see also Page 78), CALIBRATION MODE = Wet (→ see also Page 82) For this parameter, the on-site display shows the level value to be entered and the pressure present at the device. In order for the level value to be saved together with the pressure present at the device, the entry field for the level value must first be activated using the ⊞ or ⊟ key before confirming with the Ⓔ key. This applies also if the level value is to remain unchanged. **Factory setting:** 100.0
DAMPING VALUE (247) Entry	Enter damping time (time constant τ). The damping affects the speed at which all subsequent elements, such as the on-site display, measured value and current output react to a change in the pressure. **Input range:** 0.0...999.0 s **Factory setting:** 2.0 s or as per order specifications

Table 5: (GROUP SELECTION →) QUICK SETUP "Flow"	
Parameter name	**Description**
This menu displays the most important parameters for the "Flow" measuring mode. **Prerequisite**: ▪ Deltabar S differential pressure transmitter ▪ MEASURING MODE = Flow	

Table 5: (GROUP SELECTION →) QUICK SETUP "Flow"	
Parameter name	**Description**
POS. ZERO ADJUST (685) Entry	Position adjustment – the pressure difference between zero (set point) and the measured pressure need not be known. (A reference pressure is present at the device.) Due to the orientation of the device, there may be a shift in the measured value, i.e. when the container is empty, the MEASURED VALUE parameter does not display zero. **Example:** – MEASURED VALUE = 2.2 mbar (0,033 psi) – Correct the MEASURED VALUE via the POS. ZERO ADJUST parameter with the "Confirm" option. This means that you are assigning the value 0.0 to the pressure present. – MEASURED VALUE (after pos. zero adjust) = 0.0 mbar – The current value is also corrected. The CALIB. OFFSET parameter displays the resulting pressure difference (offset) by which the MEASURED VALUE was corrected. **Selection:** ▪ Abort ▪ Confirm **Factory setting:** 0.0
MAX. FLOW (311) Entry	Enter maximum flow of primary element. See also layout sheet of primary element. The maximum flow is assigned to the maximum pressure which you enter via MAX PRESS. FLOW. Use the LINEAR/SQROOT parameter (→ Page 114) to specify the current signal for the "Flow" measuring mode. The following applies for the "Flow (square root)" setting: If you enter a new value for MAX. FLOW, the value for SET URV is also changed. Use SET URV to assign a flow to the upper current value. If you want to assign the upper current value a value other than that for MAX. FLOW, you must enter the desired value for SET URV. (→ SET URV, Page 104). **Factory setting:** 1.0
MAX PRESS. FLOW (634) Entry	Enter maximum pressure of primary element. → See layout sheet of primary element. This value is assigned to the maximum flow value (→ see MAX. FLOW). Use the LINEAR/SQROOT parameter (→ Page 114) to specify the current signal for the "Flow" measuring mode. The following applies for the "Differential pres." setting: If you enter a new value for MAX PRESS. FLOW, the value for SET URV is also changed. Use SET URV to assign a pressure value to the upper current value. If you want to assign the upper current value a value other than that for MAX PRESS. FLOW, you must enter the desired value for SET URV. (→ SET URV, Page 104). **Factory setting:** High sensor limit (→ See PRESS. SENS HILIM, Page 120)
MIN. PRESS. FLOW Display	Display of the pressure value at minimum flow rate (= 0). **Factory setting:** 0 **Prerequisite:** Digital communication
DAMPING VALUE (247) Entry	Enter damping time (time constant τ). The damping affects the speed at which all subsequent elements, such as the on-site display, measured value and current output react to a change in the pressure. **Input range:** 0.0...999.0 s **Factory setting:** 2.0 s or as per order specifications

Table 6: (GROUP SELECTION →) OPERATING MENU → SETTINGS → POSITION ADJUSTMENT	
Parameter name	**Description**
Due to the orientation of the device, there may be a shift in the measured value, i.e. when the container is empty, the measured value does not display zero. Deltabar S and Cerabar S offer three different ways of performing a position adjustment. Recommendation: ▪ The pressure difference between zero (set point) and the measured pressure need not be known. – POS. ZERO ADJUST: Deltabar S or Cerabar S with gauge pressure sensor or Deltapilot S. – POS. INPUT VALUE: Cerabar S with absolute pressure sensor. ▪ The pressure difference between zero (set point) and the measured pressure is known. – CALIB. OFFSET: Deltabar S, Cerabar S with gauge pressure sensor, Cerabar S with absolute pressure sensor or Deltapilot S.	
POS. ZERO ADJUST (685) Entry	Position adjustment – the pressure difference between zero (set point) and the measured pressure need not be known. **Example:** – MEASURED VALUE = 2.2 mbar (0.033 psi) – Correct the MEASURED VALUE via the POS. ZERO ADJUST parameter with the "Confirm" option. This means that you are assigning the value 0.0 to the pressure present. – MEASURED VALUE (after pos. zero adjust) = 0.0 mbar – The current value is also corrected. The CALIB. OFFSET parameter displays the resulting pressure difference (offset) by which the MEASURED VALUE was corrected. **Selection:** ▪ Abort ▪ Confirm **Factory setting:** 0.0
POS. INPUT VALUE (563) Entry	Position adjustment – the pressure difference between zero (set point) and the measured pressure need not be known. To correct the pressure difference, you need a reference measurement value (e. g. from a reference device). **Example:** – MEASURED VALUE = 0.5 mbar (0.0075 psi) – For the POS. INPUT VALUE parameter, specify the desired set point for the MEASURED VALUE, e.g. 2.0 mbar (0.03 psi). (MEASURED $VALUE_{new}$ = POS. INPUT VALUE) – MEASURED VALUE (after entry for POS. INPUT VALUE) = 2.0 mbar (0.03 psi) – The CALIB. OFFSET parameter displays the resulting pressure difference (offset) by which the MEASURED VALUE was corrected. CALIB. OFFSET = MEASURED $VALUE_{old}$ – POS. INPUT VALUE, here: CALIB. OFFSET = 0.5 mbar (0.0075 psi) – 2.0 mbar (0.03 psi) = – 1.5 mbar (0.0225 psi)) – The current value is also corrected. **Factory setting:** 0.0
CALIB. OFFSET (319) Entry	Position adjustment - the pressure difference between zero (set point) and the measured pressure is known. **Example:** – MEASURED VALUE = 2.2 mbar (0.033 psi) – Via the CALIB. OFFSET parameter, enter the value by which the MEASURED VALUE should be corrected. To correct the MEASURED VALUE to 0.0 mbar, you must enter the value 2.2 here. (MEASURED $VALUE_{new}$ = MEASURED $VALUE_{old}$ – CALIB. OFFSET) – MEASURED VALUE (after entry for calib. offset) = 0.0 mbar – The current value is also corrected. **Factory setting:** 0.0

Table 7: (GROUP SELECTION →) OPERATING MENU → SETTINGS → BASIC SETUP "Pressure"	
Parameter name	**Description**
Prerequisite: ▪ MEASURING MODE = Pressure	
PRESS. ENG. UNIT (060) Selection	Select pressure unit. If a new pressure unit is selected, all pressure-specific parameters are converted and displayed with the new unit. **Options:** ▪ mbar, bar ▪ mmH2O, mH2O, inH2O, ftH2O 1) ▪ Pa, hPa, kPa, MPa ▪ psi ▪ mmHg, inHg 2) ▪ Torr ▪ g/cm^2, kg/cm^2 ▪ lb/ft^2 ▪ atm ▪ gf/cm^2, kgf/cm^2 ▪ User unit, → See also the following parameter description for CUSTOMER UNIT P and CUST. UNIT FACT. P. 1) The conversion factor of the pressure units refers to a reference temperature of 4 °C (39.2 °F). 2) The conversion factor of the pressure units refers to a reference temperature of 0 °C (32 °F). **Factory setting:** Depends on the sensor nominal measuring range mbar or bar or as per order specifications
CUSTOMER UNIT P (075) Entry	Enter text (unit) for customer-specific pressure unit. You can enter a maximum of eight alphanumeric characters here. → See also CUST. UNIT FACT. P. **Prerequisite:** ▪ PRESS. ENG. UNIT = User unit Only the first five characters are shown on the on-site display. For example, if "crates" is specified as the customer-specific unit, "crate" is displayed. If the unit contains a slash, up to eight characters can be shown on the on-site display. The maximum number of characters in the counter is again limited to five. For example, if "crates/m2" is specified as the customer-specific unit, "crate/m2" is displayed. In the FieldCare, all eight characters are displayed. In the HART handheld terminal, the customer-specific unit is only displayed in the CUSTOMER UNIT P parameter. The measured value is displayed with the additional text "User Unit". **Factory setting:** _ _ _ _ _ _ _ _
CUST. UNIT FACT. P (317) Entry	Enter conversion factor for a customer-specific pressure unit. The conversion factor must be entered in relation to the SI unit "Pa". → See also CUSTOMER UNIT P. **Prerequisite:** ▪ PRESS. ENG. UNIT = User unit **Example:** – You want the measured value to be displayed in "PU" (PU: packing unit). – MEASURED VALUE =10000 Pa ≙ 1 PU – Entry CUSTOMER UNIT P: PU – Entry CUST. UNIT FACT. P: 0.0001 – Result: MEASURED VALUE = 1 PU **Factory setting:** 1.0
SET LRV (245) Entry	Set lower range value – without reference pressure. Enter pressure value for the lower current value (4 mA). **Factory setting:** 0.0 or as per order specifications

Table 7: (GROUP SELECTION →) OPERATING MENU → SETTINGS → BASIC SETUP "Pressure"	
Parameter name	**Description**
SET URV (246) Entry	Set upper range value – without reference pressure. Enter pressure value for the upper current value (20 mA). **Factory setting:** High sensor limit (→ See PRESS. SENS HILIM, Page 120)
GET LRV (309) Entry	Set lower range value – reference pressure is present at device. The pressure for the lower current value (4 mA) is present at device. With the "Confirm" option, you assign the lower current value to the pressure value present. On-site display: the pressure value present is displayed in the bottom line. **Options:** ▪ Abort ▪ Confirm
GET URV (310) Entry	Set upper range value – reference pressure is present at device. The pressure for the upper current value (20 mA) is present at device. With the "Confirm" option, you assign the upper current value to the pressure value present. On-site display: the pressure value present is displayed in the bottom line. **Options:** ▪ Abort ▪ Confirm
DAMPING VALUE (247) Entry	Enter damping time (time constant τ). The damping affects the speed at which all subsequent elements, such as the on-site display, measured value and current output react to a change in the pressure. **Input range:** 0.0...999.0 s **Factory setting:** 2.0 s or as per order specifications

Table 8: (GROUP SELECTION→) OPERATING MENU → SETTINGS → BASIC SETUP "Level", LEVEL SELECTION "Level Easy Pressure"	
The following parameters are displayed if you have selected the "Level Easy Pressure" option for the LEVEL SELECTION parameter. Specify two pressure-level value pairs for this level mode. Two calibration modes, "Wet" and "Dry", are available. **Prerequisite**: ▪ MEASURING MODE = Level ▪ LEVEL SELECTION = Level Easy Pressure	
PRESS. ENG. UNIT (060) Selection	Select pressure unit. If a new pressure unit is selected, all pressure-specific parameters are converted and displayed with the new unit. **Options:** ▪ mbar, bar ▪ mmH2O, mH2O, inH2O, ftH2O 1) ▪ Pa, hPa, kPa, MPa ▪ psi ▪ mmHg, inHg 2) ▪ Torr ▪ g/cm^2, kg/cm^2 ▪ lb/ft^2 ▪ atm ▪ gf/cm^2, kgf/cm^2 ▪ User unit, → See also the following parameter description for CUSTOMER UNIT P and CUST. UNIT FACT. P. 1) The conversion factor of the pressure units refers to a reference temperature of 4 °C (39.2 °F). 2) The conversion factor of the pressure units refers to a reference temperature of 0 °C (32 °F). **Factory setting:** Depends on the sensor nominal measuring range mbar or bar or as per order specifications

Table 8: (GROUP SELECTION→) OPERATING MENU → SETTINGS → BASIC SETUP "Level", LEVEL SELECTION "Level Easy Pressure"	
CUSTOMER UNIT P (075) Entry	Enter text (unit) for customer-specific pressure unit. You can enter a maximum of eight alphanumeric characters here. → See also CUST. UNIT FACT. P. **Prerequisite:** ▪ PRESS. ENG. UNIT = User unit Only the first five characters are shown on the on-site display. For example, if "crates" is specified as the customer-specific unit, "crate" is displayed. If the unit contains a slash, up to eight characters can be shown on the on-site display. The maximum number of characters in the counter is again limited to five. For example, if "crates/m2" is specified as the customer-specific unit, "crate/m2" is displayed. In the FieldCare, all eight characters are displayed. In the HART handheld terminal, the customer-specific unit is only displayed in the CUSTOMER UNIT P parameter. The measured value is displayed with the additional text "User Unit". **Factory setting:** – – – – – – – –
CUST. UNIT FACT. P (317) Entry	Enter conversion factor for a customer-specific pressure unit. The conversion factor must be entered in relation to the SI unit "Pa". → See also CUSTOMER UNIT P. **Prerequisite:** ▪ PRESS. ENG. UNIT = User unit **Example:** – You want the measured value to be displayed in "PU" (PU: packing unit). – MEASURED VALUE =10000 Pa ≙ 1 PU – Entry CUSTOMER UNIT P: PU – Entry CUST. UNIT FACT. P: 0.0001 – Result: MEASURED VALUE = 1 PU **Factory setting:** 1.0
OUTPUT UNIT (023) Selection	Select unit for measured value display and MEASURED VALUE parameter (→ Page 121). The selected unit is used only to describe the measured value. This means that when selecting a new output unit, the measured value is not converted. Example: ▪ current measured value: 0.3 ft ▪ new output unit: m ▪ new measured value: 0.3 m (0.98 ft) **Options** ▪ % ▪ mm, cm, dm, m ▪ ft, inch ▪ cm^3, dm^3, m^3,m^3 E^3 ▪ l, hl ▪ ft^3, ft^3 E^3 ▪ gal, bbl, Igal ▪ g, kg, t ▪ lb, ton, oz **Factory setting:** %

Table 8: (GROUP SELECTION→) OPERATING MENU → SETTINGS → BASIC SETUP "Level", LEVEL SELECTION "Level Easy Pressure"	
CALIBRATION MODE (008) Selection	Select calibration mode. **Options:** ▪ Wet Wet calibration takes place by filling and emptying the container. In the case of two different levels, the level, volume, mass or percentage value entered is assigned to the pressure measured at this point in time. (→ See also this table, parameter descriptions for EMPTY CALIB. and FULL CALIB.) ▪ Dry Dry calibration is a theoretical calibration. For this calibration, specify two pressure-level value pairs via the following parameters: EMPTY CALIB., EMPTY PRESSURE, FULL CALIB. and FULL PRESSURE. **Factory setting:** Wet
EMPTY CALIB. (010) Entry	Enter level, volume, mass or percentage value for the lower calibration point (container empty). The container is either empty or part full. By entering a value for this parameter, you assign a level, volume, mass or percentage value to the pressure present at the device. The unit is selected via the OUTPUT UNIT parameter (→ Page 71). **Prerequisite:** ▪ CALIBRATION MODE = Wet For this parameter, the on-site display shows the level value to be entered and the pressure present at the device. In order for the level value to be saved together with the pressure present at the device, the entry field for the level value must first be activated using the ⊞ or ⊟ key before confirming with the Ⓔ key. This applies also if the level value is to remain unchanged. **Factory setting:** 0.0
FULL CALIB. (004) Entry	Enter height, volume or mass value for the upper calibration point (container full). The container is either completely or almost full. By entering a value for this parameter, you assign a height, volume or mass value to the pressure present at the device. The unit is selected via the OUTPUT UNIT parameter (→ Page 71). **Prerequisite:** ▪ CALIBRATION MODE = Wet For this parameter, the on-site display shows the level value to be entered and the pressure present at the device. In order for the level value to be saved together with the pressure present at the device, the entry field for the level value must first be activated using the ⊞ or ⊟ key before confirming with the Ⓔ key. This applies also if the level value is to remain unchanged. **Factory setting:** 100.0
EMPTY CALIB. (010) Entry	Enter level, volume, mass or percentage value for the lower calibration point (container empty). The values entered for the EMPTY CALIB. and EMPTY PRESSURE parameters form the pressure-level value pair for the lower calibration point. The unit is selected via the OUTPUT UNIT parameter (→ Page 71). **Prerequisite:** ▪ CALIBRATION MODE = Dry **Factory setting:** 0.0
EMPTY PRESSURE (011) Entry	Enter pressure value for the lower calibration point (container empty). → See also EMPTY CALIB. **Prerequisite:** ▪ CALIBRATION MODE = Dry **Factory setting:** 0.0

Table 8: (GROUP SELECTION→) OPERATING MENU → SETTINGS → BASIC SETUP "Level", LEVEL SELECTION "Level Easy Pressure"	
FULL CALIB. (004) Entry	Enter height, volume, mass or percentage value for the upper calibration point (container full). The values entered for the FULL CALIB. and FULL PRESSURE parameters form the pressure-level value pair for the upper calibration point. The unit is selected via the OUTPUT UNIT parameter (→ Page 71). **Prerequisite:** ▪ CALIBRATION MODE = Dry **Factory setting:** 100.0
FULL PRESSURE (005) Entry	Enter pressure value for the upper calibration point (container full). → See also FULL CALIB. **Prerequisite:** ▪ CALIBRATION MODE = Dry **Factory setting:** 100.0
SET LRV (013) Entry	Enter value for the lower current value (4 mA). The unit is selected via the OUTPUT UNIT parameter (→ Page 71). **Factory setting:** 0.0
SET URV (012) Entry	Enter value for the upper current value (20 mA). The unit is selected via the OUTPUT UNIT parameter (→ Page 71). **Factory setting:** 100.0
DAMPING VALUE (247) Entry	Enter damping time (time constant τ). The damping affects the speed at which all subsequent elements, such as the on-site display, measured value and current output react to a change in the pressure. **Input range:** 0.0 to 999.0 s **Factory setting:** 2.0 s or as per order specifications

Table 9: (GROUP SELECTION→) OPERATING MENU → SETTINGS → BASIC SETUP "Level", LEVEL SELECTION "Level Easy Height"
The following parameters are displayed if you have selected the "Level Easy Height" option for the LEVEL SELECTION parameter. For this level mode, specify a height unit, density and two height-level value pairs. The pressure measured value is converted to a height value using the density entered and the height. Two calibration modes, "Wet" and "Dry", are available. **Prerequisite**: ▪ MEASURING MODE = Level ▪ LEVEL SELECTION = Level Easy Height

Table 9: (GROUP SELECTION→) OPERATING MENU → SETTINGS → BASIC SETUP "Level", LEVEL SELECTION "Level Easy Height"	
PRESS. ENG. UNIT (060) Options	Select pressure unit. If a new pressure unit is selected, all pressure-specific parameters are converted and displayed with the new unit. **Options:** ▪ mbar, bar ▪ mmH2O, mH2O, inH2O, ftH2O 1) ▪ Pa, hPa, kPa, MPa ▪ psi ▪ mmHg, inHg 2) ▪ Torr ▪ g/cm^2, kg/cm^2 ▪ lb/ft^2 ▪ atm ▪ gf/cm^2, kgf/cm^2 ▪ User unit, → See also the following parameter description for CUSTOMER UNIT P and CUST. UNIT FACT. P. 1) The conversion factor of the pressure units refers to a reference temperature of 4 °C (39.2 °F). 2) The conversion factor of the pressure units refers to a reference temperature of 0 °C (32 °F). **Factory setting:** Depends on the sensor nominal measuring range mbar or bar or as per order specifications
CUSTOMER UNIT P (075) Entry	Enter text (unit) for customised pressure unit. You can enter a maximum of eight alphanumeric characters here. → See also CUST. UNIT FACT. P. **Prerequisite:** ▪ PRESS. ENG. UNIT = User unit Only the first five characters are shown on the on-site display. For example, if "crates" is specified as the customer-specific unit, "crate" is displayed. If the unit contains a slash, up to eight characters can be shown on the on-site display. The maximum number of characters in the counter is again limited to five. For example, if "crates/m2" is specified as the customer-specific unit, "crate/m2" is displayed. In the FieldCare, all eight characters are displayed. In the HART handheld terminal, the customised unit is displayed only in the CUSTOMER UNIT P parameter. The measured value is displayed with the additional text "User Unit". **Factory setting:** – – – – – – – –
CUST. UNIT FACT. P (317) Entry	Enter conversion factor for a customer-specific pressure unit. The conversion factor must be entered in relation to the SI unit "Pa". → See also CUSTOMER UNIT P. **Prerequisite:** ▪ PRESS. ENG. UNIT = User unit **Example:** – You want the measured value to be displayed in "PU" (PU: packing unit). – MEASURED VALUE =10000 Pa ≙ 1 PU – Entry CUSTOMER UNIT P: PU – Entry CUST. UNIT FACT. P: 0.0001 – Result: MEASURED VALUE = 1 PU **Factory setting:** 1.0

Table 9: (GROUP SELECTION→) OPERATING MENU → SETTINGS → BASIC SETUP "Level", LEVEL SELECTION "Level Easy Height"	
OUTPUT UNIT (023) Options	Select unit for measured value display and MEASURED VALUE parameter (→ Page 121). The selected unit is used only to describe the measured value. This means that when selecting a new output unit, the measured value is not converted. Example: ▪ current measured value: 0.3 ft ▪ new output unit: m ▪ new measured value: 0.3 m (0.98 ft) **Options:** ▪ % ▪ mm, cm, dm, m ▪ ft, inch ▪ cm^3, dm^3, m^3,m^3 E^3 ▪ l, hl ▪ ft^3, ft^3 E^3 ▪ gal, bbl, Igal ▪ g, kg, t ▪ lb, ton, oz **Factory setting:** %
HEIGHT UNIT (003) Options	Select height unit. The measured pressure is converted to the chosen height unit using the DENSITY UNIT and ADJUST DENSITY parameters. **Options:** ▪ mm ▪ cm ▪ dm ▪ m ▪ inch ▪ ft **Factory setting:** m
CALIBRATION MODE (008) Options	Select calibration mode. **Options:** ▪ Wet Wet calibration takes place by filling and emptying the container. The measured pressure is converted to the chosen height unit using the HEIGHT UNIT, DENSITY UNIT and ADJUST DENSITY parameters. In the case of two different levels, the level, volume, mass or percentage value entered is assigned to the converted height value. ▪ Dry Dry calibration is a theoretical calibration. For this calibration, specify two height-level value pairs via the EMPTY CALIB., EMPTY HEIGHT, FULL CALIB. and FULL HEIGHT parameters. **Factory setting:** Dry
DENSITY UNIT (001) Options	Select density unit. The measured pressure is converted to a height using the HEIGHT UNIT, DENSITY UNIT and ADJUST DENSITY parameters. **Options:** ▪ g/cm^3 ▪ kg/dm^3 ▪ kg/m^3 ▪ US lb/in^3 ▪ US lb/ft^3 **Factory setting:** kg/dm^3
ADJUST DENSITY (007) Entry	Enter density of fluid. The measured pressure is converted to a height using the HEIGHT UNIT, DENSITY UNIT and ADJUST DENSITY parameters. **Factory setting:** 1.0

Table 9: (GROUP SELECTION→) OPERATING MENU → SETTINGS → BASIC SETUP "Level", LEVEL SELECTION "Level Easy Height"	
EMPTY CALIB. (010) Entry	Enter level, volume, mass or percentage value for the lower calibration point (container empty). The container is either empty or part full. The measured pressure is converted to a height value using the HEIGHT UNIT, DENSITY UNIT and ADJUST DENSITY parameters and displayed. Using the parameter EMPTY CALIB., you assign a level, volume, mass or percentage value to the height value. The unit is selected via the OUTPUT UNIT parameter (→ Page 75). **Prerequisite:** ▪ CALIBRATION MODE = Wet For this parameter, the on-site display shows the level value to be entered and the pressure present at the device. In order for the level value to be saved together with the pressure present at the device, the entry field for the level value must first be activated using the ⊞ or ⊟ key before confirming with the Ⓔ key. This applies also if the level value is to remain unchanged. **Factory setting:** 0.0
FULL CALIB. (004) Entry	Enter level, volume, mass or percentage value for the upper calibration point (container full). The container is either completely or almost full. Using the parameters HEIGHT UNIT, DENSITY UNIT and ADJUST DENSITY, the measured pressure is converted to a height value and displayed. Using the parameter FULL CALIB., you assign a level, volume, mass or percentage value to the height value. The unit is selected via the OUTPUT UNIT parameter (→ Page 75). **Prerequisite:** ▪ CALIBRATION MODE = Wet For this parameter, the on-site display shows the level value to be entered and the pressure present at the device. In order for the level value to be saved together with the pressure present at the device, the entry field for the level value must first be activated using the ⊞ or ⊟ key before confirming with the Ⓔ key. This applies also if the level value is to remain unchanged. **Factory setting:** 100.0
EMPTY CALIB. (010) Entry	Enter level, volume, mass or percentage value for the lower calibration point (container empty). The values entered for the EMPTY CALIB. and EMPTY HEIGHT parameters form the height-level value pair for the lower calibration point. The unit is selected via the OUTPUT UNIT parameter (→ Page 75). **Prerequisite:** ▪ CALIBRATION MODE = Dry **Factory setting:** 0.0
EMPTY HEIGHT (009) Entry	Height value for the lower calibration point (container empty). The unit is selected via the HEIGHT UNIT parameter (→ Page 75). → See also EMPTY CALIB. **Prerequisite:** ▪ CALIBRATION MODE = Dry **Factory setting:** Upper range limit (URL) coverted to an height unit
FULL CALIB. (004) Entry	Enter level, volume, mass or percentage value for the upper calibration point (container full). The values entered for the FULL CALIB. and FULL HEIGHT parameters form the height-level value pair for the upper calibration point. The unit is selected via the OUTPUT UNIT parameter (→ Page 75). **Prerequisite:** ▪ CALIBRATION MODE = Dry **Factory setting:** 100.0

Table 9: (GROUP SELECTION→) OPERATING MENU → SETTINGS → BASIC SETUP "Level", LEVEL SELECTION "Level Easy Height"	
FULL HEIGHT (006) Entry	Enter height value for the upper calibration point (container full). The unit is selected via the HEIGHT UNIT parameter (→ Page 75). → See also FULL CALIB. **Prerequisite:** ▪ CALIBRATION MODE = Dry **Factory setting:** 0.0
SET LRV (013) Entry	Enter level, volume, mass or percentage value for the lower current value (4 mA). The unit is selected via the OUTPUT UNIT parameter (→ Page 75). **Factory setting:** 0.0
SET URV (012) Entry	Enter level, volume, mass or percentage value for the upper current value (20 mA). The unit is selected via the OUTPUT UNIT parameter (→ Page 75). **Factory setting:** 100.0
DAMPING VALUE (247) Entry	Enter damping time (time constant τ). The damping affects the speed at which all subsequent elements, such as the on-site display, measured value and current output react to a change in the pressure. **Input range:** 0.0 to 999.0 s **Factory setting:** 2.0 s or as per order specifications

Table 10: (GROUP SELECTION →) OPERATING MENU → SETTINGS → BASIC SETUP "Level" LEVEL SELECTION "Level Standard"	
Parameter name	**Description**
Prerequisite: ▪ MEASURING MODE = level ▪ LEVEL SELECTION = Level Standard	
PRESS. ENG. UNIT (060) Selection	Select pressure unit. If a new pressure unit is selected, all pressure-specific parameters are converted and displayed with the new unit. **Options:** ▪ mbar, bar ▪ mmH2O, mH2O, inH2O, ftH2O 1) ▪ Pa, hPa, kPa, MPa ▪ psi ▪ mmHg, inHg 2) ▪ Torr ▪ g/cm^2, kg/cm^2 ▪ lb/ft^2 ▪ atm ▪ gf/cm^2, kgf/cm^2 ▪ User unit, → See also the following parameter description for CUSTOMER UNIT P and CUST. UNIT FACT. P. 1) The conversion factor of the pressure units refers to a reference temperature of 4 °C (39.2 °F). 2) The conversion factor of the pressure units refers to a reference temperature of 0 °C (32 °F). **Factory setting:** Depends on the sensor nominal measuring range mbar or bar or as per order specifications

Table 10: (GROUP SELECTION →) OPERATING MENU → SETTINGS → BASIC SETUP "Level" LEVEL SELECTION "Level Standard"	
Parameter name	**Description**
CUSTOMER UNIT P (075) Entry	Enter text (unit) for customer-specific pressure unit. You can enter a maximum of eight alphanumeric characters here. → See also CUST. UNIT FACT. P. **Prerequisite:** ▪ PRESS. ENG. UNIT = User unit Only the first five characters are shown on the on-site display. For example, if "crates" is specified as the customer-specific unit, "crate" is displayed. If the unit contains a slash, up to eight characters can be shown on the on-site display. The maximum number of characters in the counter is again limited to five. For example, if "crates/m2" is specified as the customer-specific unit, "crate/m2" is displayed. In the FieldCare, all eight characters are displayed. In the HART handheld terminal, the customer-specific unit is only displayed in the CUSTOMER UNIT P parameter. The measured value is displayed with the additional text "User Unit". **Factory setting:** – – – – – – – –
CUST. UNIT FACT. P (317) Entry	Enter conversion factor for a customer-specific pressure unit. The conversion factor must be entered in relation to the SI unit "Pa". → See also CUSTOMER UNIT P. **Prerequisite:** ▪ PRESS. ENG. UNIT = User unit **Example:** – You want the measured value to be displayed in "PU" (PU: packing unit). – MEASURED VALUE =10000 Pa ≙ 1 PU – Entry CUSTOMER UNIT P: PU – Entry CUST. UNIT FACT. P: 0.0001 – Result: MEASURED VALUE = 1 PU **Factory setting:** 1.0
LEVEL MODE (718) Selection	Select level type. **Options:** ▪ Linear: the measured variable (level, volume, mass or %) is in direct proportion to the measured pressure. → See also Page 79 ff, Table 9. ▪ Pressure Linearized: the measured variable (volume, mass or %) is not in direct proportion to the measured pressure such as in the case of containers with a conical outlet. For the calibration, enter a linearisation table with at least 2 and not more than 32 points. → See also Page 87 ff, Table 10. ▪ Height Linearized: select this level type if you require two measured variables or if the container shape is given with value pairs, e.g. height and volume. The following combinations are possible: – Height + Volume – Height + Mass – Height + % – %-Height + Volume – %-Height + Mass – %-Height + % Perform two calibrations for this level type. First for the measured variable height or %-height like for the "Linear" option and then for the measured variable volume, mass or % like for the "Pressure Linearized" option. → See also Page 89 ff, Table 11. **Factory setting:** Linear
→ For LEVEL MODE = Linear, see Page 79, Table 9. → For LEVEL MODE = Pressure Linearized, see Page 87, Table 10. → For LEVEL MODE = Height Linearized, see Page 89, Table 11.	

Table 11: (GROUP SELECTION →) OPERATING MENU → SETTINGS → BASIC SETUP "Level", LEVEL MODE "Linear"	
Parameter name	**Description**
The following parameters are displayed if you selected the "Linear" option for the LEVEL MODE parameter. For this level type, the measured variable (level, volume, mass or %) is in direct proportion to the measured pressure. **Prerequisite**: ▪ MEASURING MODE = Level . ▪ LEVEL SELECTION = Level Standard ▪ LEVEL MODE = Linear	
LIN. MEASURAND (804) Selection	Select measured variable. **Options:** ▪ Level ▪ Volume ▪ Mass ▪ % (Level) **Factory setting:** % (Level)
HEIGHT UNIT (708) Selection	Select level unit. **Prerequisite:** ▪ LIN. MEASURAND = Level **Options:** ▪ mm ▪ cm ▪ dm ▪ m ▪ inch ▪ ft ▪ User unit, → see also the following parameter description for CUSTOMER UNIT H and CUST. UNIT FACT. H. **Factory setting:** m
CUSTOMER UNIT H (706) Entry	Enter text (unit) for customer-specific level unit. You can enter a maximum of eight alphanumeric characters here. → See also CUST. UNIT FACT. H. **Prerequisite:** ▪ LIN. MEASURAND = Level, HEIGHT UNIT = User unit Only the first five characters are shown on the on-site display. For example, if "crates" is specified as the customer-specific unit, "crate" is displayed. If the unit contains a slash, up to eight characters can be shown on the on-site display. The maximum number of characters in the counter is again limited to five. For example, if "crates/m2" is specified as the customer-specific unit, "crate/m2" is displayed. In the FieldCare, all eight characters are displayed. In the HART handheld terminal, the customer-specific unit is only displayed in the CUSTOMER UNIT H parameter. The measured value is displayed with the additional text "User Unit". **Factory setting:** _ _ _ _ _ _ _ _

Table 11: (GROUP SELECTION →) OPERATING MENU → SETTINGS → BASIC SETUP "Level", LEVEL MODE "Linear"	
Parameter name	**Description**
CUST. UNIT FACT. H (705) Entry	Enter conversion factor for a customer-specific level unit. The conversion factor must be entered in relation to the SI unit "m". → See also CUSTOMER UNIT H. **Prerequisite:** ▪ LIN. MEASURAND = Level, HEIGHT UNIT = User unit **Example:** – You want the measured value to be displayed in "PU" (PU: packing unit). – MEASURED VALUE = 0.5 m (1.6 ft) ≙ 1 PU – Entry CUSTOMER UNIT H: PU – Entry CUST. UNIT FACT. H: 2 – Result: MEASURED VALUE = 1 PU **Factory setting:** 1.0
UNIT VOLUME (313) Selection	Select volume unit. **Prerequisite:** ▪ LIN. MEASURAND = Volume **Options:** ▪ l ▪ hl ▪ cm^3 ▪ dm^3 ▪ m^3 ▪ m^3 E^3 ▪ ft ▪ ft^3 E^3 ▪ gal ▪ Igal ▪ bbl ▪ User unit, → see also the following parameter description for CUSTOMER UNIT V and CUST. UNIT FACT. V. **Factory setting:** m^3
CUSTOMER UNIT V (608) Entry	Enter text (unit) for customer-specific volume unit. You can enter a maximum of eight alphanumeric characters here. → See also CUST. UNIT FACT. V **Prerequisite:** ▪ LIN. MEASURAND = Volume, UNIT VOLUME = User unit Only the first five characters are shown on the on-site display. For example, if "crates" is specified as the customer-specific unit, "crate" is displayed. If the unit contains a slash, up to eight characters can be shown on the on-site display. The maximum number of characters in the counter is again limited to five. For example, if "crates/m2" is specified as the customer-specific unit, "crate/m2" is displayed. In the FieldCare, all eight characters are displayed. In the HART handheld terminal, the customer-specific unit is only displayed in the CUSTOMER UNIT H parameter. The measured value is displayed with the additional text "User Unit". **Factory setting:** _ _ _ _ _ _ _ _

Table 11: (GROUP SELECTION →) OPERATING MENU → SETTINGS → BASIC SETUP "Level", LEVEL MODE "Linear"	
Parameter name	**Description**
CUST. UNIT FACT. V (607) Entry	Enter conversion factor for a customer-specific volume unit. The conversion factor must be entered in relation to the SI unit "m^3". → See also CUSTOMER UNIT V. **Prerequisite:** ▪ LIN. MEASURAND = Volume, UNIT VOLUME = User unit **Example:** – You want the measured value to be displayed in "buckets". – MEASURED VALUE = 0.01 m3 ≙ 1 bucket – Entry CUSTOMER UNIT V: bucket – Entry CUST. UNIT FACT. V: 100 – Result: MEASURED VALUE = 1 bucket **Factory setting:** 1.0
MASS UNIT (709) Selection	Select mass unit. **Prerequisite:** ▪ LIN. MEASURAND = Mass **Options:** ▪ g ▪ kg ▪ t ▪ oz ▪ lb ▪ ton ▪ User unit, → see also the following parameter description for CUSTOMER UNIT M and CUST. UNIT FACT. M. **Factory setting:** kg
CUSTOMER UNIT M (704) Entry	Enter text (unit) for customer-specific mass unit. You can enter a maximum of eight alphanumeric characters here. → See also CUST. UNIT FACT. M. **Prerequisite:** ▪ LIN. MEASURAND = Mass, MASS UNIT = User unit Only the first five characters are shown on the on-site display. For example, if "crates" is specified as the customer-specific unit, "crate" is displayed. If the unit contains a slash, up to eight characters can be shown on the on-site display. The maximum number of characters in the counter is again limited to five. For example, if "crates/m2" is specified as the customer-specific unit, "crate/m2" is displayed. In the FieldCare, all eight characters are displayed. In the HART handheld terminal, the customer-specific unit is only displayed in the CUSTOMER UNIT M parameter. The measured value is displayed with the additional text "User Unit". **Factory setting:** _ _ _ _ _ _ _ _

Table 11: (GROUP SELECTION →) OPERATING MENU → SETTINGS → BASIC SETUP "Level", LEVEL MODE "Linear"	
Parameter name	**Description**
CUST. UNIT FACT. M (703) Entry	Enter conversion factor for a customer-specific mass unit. The conversion factor must be entered in relation to the SI unit "kg". → See also CUSTOMER UNIT M. **Prerequisite:** ▪ LIN. MEASURAND = Mass, MASS UNIT = User unit **Example:** – You want the measured value to be displayed in "buckets". – MEASURED VALUE = 10 kg ≙ 1 bucket – Entry CUSTOMER UNIT M: bucket – Entry CUST. UNIT FACT. M: 0.1 – Result: MEASURED VALUE = 1 bucket **Factory setting:** 1.0
CALIBRATION MODE (392) Selection	Select calibration mode. **Options:** ▪ Wet Wet calibration takes place by filling and emptying the container. This calibration mode requires two pressure-level value pairs to be entered. In the case of two different levels, the level value is entered and the pressure measured at this moment is assigned to the level value. → See also the following parameter description for EMPTY CALIB., EMPTY PRESSURE, FULL CALIB. and FULL PRESSURE. ▪ Dry Dry calibration is a theoretical calibration which you can carry out even if the device is not mounted or the container is empty. – For the "Level" measured variable, the density of the fluid (→ see Page 83, ADJUST DENSITY) must be entered. – For the "Volume" measured variable, the density of the fluid and the tank volume and tank height must be entered (→ see Page 83, ADJUST DENSITY, TANK VOLUME and TANK HEIGHT). – For the "Mass" measured variable, the tank volume and the tank height must be entered (→ see Page 84, TANK VOLUME and TANK HEIGHT). The density must also be entered in the case of a zero point shift (level offset) (→ see Page 83, ADJUST DENSITY). – For the "%" measured variable, the density of the fluid must be entered and a level assigned to the 100 % point (→ see Page 83 and 86, ADJUST DENSITY and 100% POINT). If the measurement should not start at the mounting location of the device, a level offset must be entered (→ see Page 86, ZERO POSITION). LIN. MEASURAND: "% (Level)", "Mass" and "Volume": If the change to dry calibration is made after a wet calibration, the density must be entered correctly using the ADJUST DENSITY and DENSITY PROCESS parameter before changing the calibration mode. → See also Page 101. **Factory setting:** Wet
EMPTY CALIB. (314) Entry	Enter level value for the lower calibration point (container empty). The container is either empty or part full. By entering a value for this parameter, you are assigning a level value to the pressure present at the device. → See also EMPTY PRESSURE. **Prerequisite:** ▪ CALIBRATION MODE = Wet For this parameter, the on-site display shows the level value to be entered and the pressure present at the device. In order for the level value to be saved together with the pressure present at the device, the entry field for the level value must first be activated using the ⊞ or ⊟ key before confirming with the E key. This applies also if the level value is to remain unchanged. **Factory setting:** 0.0

Table 11: (GROUP SELECTION →) OPERATING MENU → SETTINGS → BASIC SETUP "Level", LEVEL MODE "Linear"	
Parameter name	**Description**
EMPTY PRESSURE (710) Display	Displays the pressure value for the lower calibration point (container empty). → See also EMPTY CALIB. **Prerequisite:** ▪ CALIBRATION MODE = Wet **Factory setting:** 0.0
FULL CALIB. (315) Entry	Enter level value for the upper calibration point (container full). The container is either completely or almost full. By entering a value for this parameter, you are assigning a level value to the pressure present at the device. → See also FULL PRESSURE. **Prerequisite:** ▪ CALIBRATION MODE = Wet For this parameter, the on-site display shows the level value to be entered and the pressure present at the device. In order for the level value to be saved together with the pressure present at the device, the entry field for the level value must first be activated using the ⊞ or ⊟ key before confirming with the E key. This applies also if the level value is to remain unchanged. **Factory setting:** 100.0
FULL PRESSURE (711) Display	Displays the pressure value for the upper calibration point (container full). → See also FULL CALIB. **Prerequisite:** ▪ CALIBRATION MODE = Wet **Factory setting:** High sensor limit (→ see PRESS. SENS HILIM, Page 120)
ADJUSTED DENSITY (810) Display	Displays the density calculated from the upper and lower level point. **Prerequisite:** ▪ CALIBRATION MODE = Wet, LIN. MEASURAND = Level
DENSITY UNIT (812) Selection	Select density unit. **Prerequisite:** ▪ LIN. MEASURAND = Level, CALIBRATION MODE = Dry ▪ LIN. MEASURAND = % (Level), CALIBRATION MODE = Dry ▪ LIN. MEASURAND = Volume, CALIBRATION MODE = Dry ▪ LIN. MEASURAND = Mass, CALIBRATION MODE = Dry **Options:** ▪ g/cm^3 ▪ kg/dm^3 ▪ kg/m^3 ▪ US lb/in^3 ▪ US lb/ft^3 **Factory setting:** kg/dm^3
ADJUST DENSITY (316) Entry	Enter density of fluid. **Prerequisite:** ▪ CALIBRATION MODE = Dry **Factory setting:** 1.0 (kg/dm^3)

Table 11: (GROUP SELECTION →) OPERATING MENU → SETTINGS → BASIC SETUP "Level", LEVEL MODE "Linear"	
Parameter name	**Description**
UNIT VOLUME (313) Selection	Select volume unit. **Prerequisite:** ▪ LIN. MEASURAND = Volume **Options:** ▪ l ▪ hl ▪ cm^3 ▪ dm^3 ▪ m^3 ▪ m^3 E^3 ▪ ft ▪ ft^3 E^3 ▪ gal ▪ Igal ▪ bbl ▪ User unit, → see also the following parameter description for CUSTOMER UNIT V and CUST. UNIT FACT. V. **Factory setting:** m^3
CUSTOMER UNIT V (608) Entry	Enter text (unit) for customer-specific volume unit. You can enter a maximum of eight alphanumeric characters here. → See also CUST. UNIT FACT. V **Prerequisite:** ▪ LIN. MEASURAND = Volume, UNIT VOLUME = User unit Only the first five characters are shown on the on-site display. For example, if "crates" is specified as the customer-specific unit, "crate" is displayed. If the unit contains a slash, up to eight characters can be shown on the on-site display. The maximum number of characters in the counter is again limited to five. For example, if "crates/m2" is specified as the customer-specific unit, "crate/m2" is displayed. In the FieldCare, all eight characters are displayed. In the HART handheld terminal, the customer-specific unit is only displayed in the CUSTOMER UNIT H parameter. The measured value is displayed with the additional text "User Unit". **Factory setting:** _ _ _ _ _ _ _ _
CUST. UNIT FACT. V (607) Entry	Enter conversion factor for a customer-specific volume unit. The conversion factor must be entered in relation to the SI unit "m^3". → See also CUSTOMER UNIT V. **Prerequisite:** ▪ LIN. MEASURAND = Volume, UNIT VOLUME = User unit **Example:** – You want the measured value to be displayed in "buckets". – MEASURED VALUE = 0.01 m3 ≙ 1 bucket – Entry CUSTOMER UNIT V: bucket – Entry CUST. UNIT FACT. V: 100 – Result: MEASURED VALUE = 1 bucket **Factory setting:** 1.0
TANK VOLUME (858) Entry	Enter tank volume. **Prerequisite:** ▪ LIN. MEASURAND = Volume, CALIBRATION MODE = Dry ▪ LIN. MEASURAND = Mass, CALIBRATION MODE = Dry **Factory setting:** 1.0 m^3

Table 11: (GROUP SELECTION →) OPERATING MENU → SETTINGS → BASIC SETUP "Level", LEVEL MODE "Linear"	
Parameter name	**Description**
HEIGHT UNIT (708) Selection	Select level unit. **Prerequisite:** ▪ LIN. MEASURAND = % (Level), CALIBRATION MODE = Dry **Options:** ▪ mm ▪ dm ▪ cm ▪ m ▪ inch ▪ ft ▪ User unit, → see also the following parameter description for CUSTOMER UNIT H and CUST. UNIT FACT. H. **Factory setting:** m
CUSTOMER UNIT H (706) Entry	Enter text (unit) for customer-specific level unit. You can enter a maximum of eight alphanumeric characters here. → See also CUST. UNIT FACT. H. **Prerequisite:** ▪ LIN. MEASURAND = % (Level), CALIBRATION MODE = Dry, HEIGHT UNIT = User unit Only the first five characters are shown on the on-site display. For example, if "crates" is specified as the customer-specific unit, "crate" is displayed. If the unit contains a slash, up to eight characters can be shown on the on-site display. The maximum number of characters in the counter is again limited to five. For example, if "crates/m2" is specified as the customer-specific unit, "crate/m2" is displayed. In the FieldCare, all eight characters are displayed. In the HART handheld terminal, the customer-specific unit is only displayed in the CUSTOMER UNIT H parameter. The measured value is displayed with the additional text "User Unit". **Factory setting:** _ _ _ _ _ _ _ _
CUST. UNIT FACT. H (705) Entry	Enter conversion factor for a customer-specific level unit. The conversion factor must be entered in relation to the SI unit "m". → See also CUSTOMER UNIT H. **Prerequisite:** ▪ LIN. MEASURAND = % (Level), CALIBRATION MODE = Dry, HEIGHT UNIT = User unit **Example:** – You want the measured value to be displayed in "PU" (PU: packing unit). – MEASURED VALUE = 0.5 m (1.6 ft) ≙ 1 PU – Entry CUSTOMER UNIT H: PU – Entry CUST. UNIT FACT. H: 2 – Result: MEASURED VALUE = 1 PU **Factory setting:** 1.0
TANK HEIGHT (859) Entry	Enter tank height. **Prerequisite:** ▪ LIN. MEASURAND = Volume, CALIBRATION MODE = Dry ▪ LIN. MEASURAND = Mass, CALIBRATION MODE = Dry **Factory setting:** 1.0 m

Table 11: (GROUP SELECTION →) OPERATING MENU → SETTINGS → BASIC SETUP "Level", LEVEL MODE "Linear"	
Parameter name	**Description**
100% POINT (813) Entry	Enter level value for 100% point. **Prerequisite:** ▪ LIN. MEASURAND = % (Level), CALIBRATION MODE = Dry **Example:** – The 100 %-point should correspond to 4 m (13 ft). – Select the "m" unit via the HEIGHT UNIT parameter. – Enter the value "4" for this parameter (100% POINT). **Factory setting:** 1.0
ZERO POSITION (814) Entry	Enter value for level offset. If the measurement should not start at the mounting location of the device, e.g. for containers with a sump, carry out zero point shift (level offset). **Prerequisite:** ▪ CALIBRATION MODE = Dry **Factory setting:** 0.0 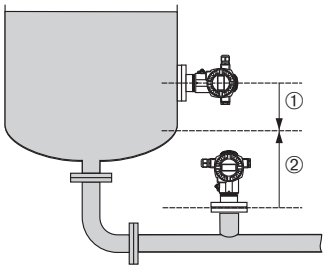 *Fig. 21: Zero point shift* *1 Device is mounted above the level lower range value: a positive value has to be entered for ZERO POSITION.* *2 Device is mounted below the level lower range value: a negative value has to be entered for ZERO POSITION.*
SET LRV (719) Entry	Enter level value for the lower current value (4 mA). **Factory setting:** 0.0
SET URV (720) Entry	Enter level value for the upper current value (20 mA). **Factory setting:** 100.0
DAMPING VALUE (247) Entry	Enter damping time (time constant τ). The damping affects the speed at which all subsequent elements, such as the on-site display, measured value and current output react to a change in the pressure. **Input range:** 0.0...999.0 s **Factory setting:** 2.0 s or as per order specifications

Table 12: (GROUP SELECTION →) OPERATING MENU → SETTINGS → BASIC SETUP "Level", LEVEL MODE "Pressure Linearized"	
Parameter name	**Description**
The following parameters are displayed if you selected the "Pressure Linearized" option for the LEVEL MODE parameter. For this level type, the measured variable (volume, mass or %) is not in direct proportion to the measured pressure. For the calibration, enter a linearisation table with at least 2 and not more than 32 points. **Prerequisite**: ▪ MEASURING MODE = Level ▪ LEVEL SELECTION = Level Standard ▪ LEVEL MODE = Pressure Linearized	
LINd. MEASURAND (805) Selection	Select measured variable. **Options:** ▪ Pressure and Volume ▪ Pressure and Mass ▪ Pressure and % **Factory setting:** Pressure and %
UNIT VOLUME (313) Selection	Select volume unit. **Prerequisite:** ▪ LINd. MEASURAND = Pressure and Volume **Options:** ▪ l ▪ hl ▪ cm^3 ▪ dm^3 ▪ m^3 ▪ m^3 E^3 ▪ ft ▪ ft^3 E^3 ▪ gal ▪ Igal ▪ bbl ▪ User unit, → see also the following parameter description for CUSTOMER UNIT V and CUST. UNIT FACT. V. **Factory setting:** m^3
CUSTOMER UNIT V (608) Entry	Enter text (unit) for customer-specific volume unit. You can enter a maximum of eight alphanumeric characters here. → See also CUST. UNIT FACT. V **Prerequisite:** ▪ LINd. MEASURAND = Pressure and Volume, UNIT VOLUME = User unit Only the first five characters are shown on the on-site display. For example, if "crates" is specified as the customer-specific unit, "crate" is displayed. If the unit contains a slash, up to eight characters can be shown on the on-site display. The maximum number of characters in the counter is again limited to five. For example, if "crates/m2" is specified as the customer-specific unit, "crate/m2" is displayed. In the FieldCare, all eight characters are displayed. In the HART handheld terminal, the customer-specific unit is only displayed in the CUSTOMER UNIT V parameter. The measured value is displayed with the additional text "User Unit". **Factory setting:** – – – – – – – –

Table 12: (GROUP SELECTION →) OPERATING MENU → SETTINGS → BASIC SETUP "Level", LEVEL MODE "Pressure Linearized"	
Parameter name	**Description**
CUST. UNIT FACT. V (607) Entry	Enter conversion factor for a customer-specific volume unit. The conversion factor must be entered in relation to the SI unit "m^3". → See also CUSTOMER UNIT V. **Prerequisite:** ▪ LINd. MEASURAND = Pressure and Volume, UNIT VOLUME = User unit **Example:** – You want the measured value to be displayed in "buckets". – MEASURED VALUE = 0.01 m3 ≙ 1 bucket – Entry CUSTOMER UNIT V: bucket – Entry CUST. UNIT FACT. V: 100 – Result: MEASURED VALUE = 1 bucket **Factory setting:** 1.0
MASS UNIT (709) Selection	Select mass unit. **Prerequisite:** ▪ LINd. MEASURAND = Pressure and Mass **Options:** ▪ g ▪ kg ▪ t ▪ oz ▪ lb ▪ ton ▪ User unit, → see also the following parameter description for CUSTOMER UNIT M and CUST. UNIT FACT. M. **Factory setting:** kg
CUSTOMER UNIT M (704) Entry	Enter text (unit) for customer-specific mass unit. You can enter a maximum of eight alphanumeric characters here. → See also CUST. UNIT FACT. M. **Prerequisite:** ▪ LINd. MEASURAND = Pressure and Mass, MASS UNIT = User unit Only the first five characters are shown on the on-site display. For example, if "crates" is specified as the customer-specific unit, "crate" is displayed. If the unit contains a slash, up to eight characters can be shown on the on-site display. The maximum number of characters in the counter is again limited to five. For example, if "crates/m2" is specified as the customer-specific unit, "crate/m2" is displayed. In the FieldCare, all eight characters are displayed. In the HART handheld terminal, the customer-specific unit is only displayed in the CUSTOMER UNIT M parameter. The measured value is displayed with the additional text "User Unit". **Factory setting:** _ _ _ _ _ _ _ _

Table 12: (GROUP SELECTION →) OPERATING MENU → SETTINGS → BASIC SETUP "Level", LEVEL MODE "Pressure Linearized"	
Parameter name	**Description**
CUST. UNIT FACT. M (703) Entry	Enter conversion factor for a customer-specific mass unit. The conversion factor must be entered in relation to the SI unit "kg". → See also CUSTOMER UNIT M. **Prerequisite:** ▪ LINd. MEASURAND = Pressure and Mass, MASS UNIT = User unit **Example:** – You want the measured value to be displayed in "buckets". – MEASURED VALUE = 10 kg ≙ 1 bucket – Entry CUSTOMER UNIT M: bucket – Entry CUST. UNIT FACT. M: 0.1 – Result: MEASURED VALUE = 1 bucket **Factory setting:** 1.0
HYDR. PRESS MIN. (775) Entry	Enter the minimum hydrostatic pressure to be expected. The input limits for the calibration (editing limits) are derived from the value entered. The closer the value entered corresponds to the minimum hydrostatic pressure to be expected, the more accurate the measurement result. **Factory setting:** 0.0
HYDR. PRESS MAX. (761) Entry	Enter the maximum hydrostatic pressure to be expected. The input limits for the calibration (editing limits) are derived from the value entered. The closer the value entered corresponds to the maximum hydrostatic pressure to be expected, the more accurate the measurement result. **Factory setting:** High sensor limit (→ See PRESS. SENS HILIM, Page 120)
DAMPING VALUE (247) Entry	Enter damping time (time constant τ). The damping affects the speed at which all subsequent elements, such as the on-site display, measured value and current output react to a change in the pressure. **Input range:** 0.0...999.0 s **Factory setting:** 2.0 s or as per order specifications

Table 13: (GROUP SELECTION →) OPERATING MENU → SETTINGS → BASIC SETUP "Level", LEVEL MODE "Height Linearized"	
Parameter name	**Description**
The following parameters are displayed if you selected the "Height Linearized" option for the LEVEL MODE parameter. Select this level type if you require two measured variables or if the container shape is given with value pairs, e.g. height and volume. The following combinations are possible: ▪ Height + Volume ▪ Height + Mass ▪ Height + % ▪ %-Height + Volume ▪ %-Height + Mass ▪ %-Height + % The 1st measured variable (%-Height or Height) must be in direct proportion to the measured pressure. The 2nd measured variable (Volume, Mass or %) must not be in direct proportion. A linearisation table must be entered for the 2nd measured variable. The 2nd measured variable is assigned to the 1st measured variable by means of this table. **Prerequisite**: ▪ MEASURING MODE = Level ▪ LEVEL SELECTION = Level Standard ▪ LEVEL MODE = Height Linearized	

Table 13: (GROUP SELECTION →) OPERATING MENU → SETTINGS → BASIC SETUP "Level", LEVEL MODE "Height Linearized"	
Parameter name	**Description**
COMB. MEASURAND (806) Selection	Select measured variable. **Options:** ▪ Height and Volume ▪ Height and Mass ▪ Height and % ▪ %-Height and Volume ▪ %-Height and Mass ▪ %-Height and % **Factory setting:** %-Height and %
HEIGHT UNIT (708) Selection	Select level unit for the 1st measured variable. **Prerequisite:** ▪ COMB. MEASURAND = Height and Volume, Height and Mass or Height and % **Options:** ▪ mm ▪ dm ▪ cm ▪ m ▪ inch ▪ ft ▪ User unit, → see also the following parameter description for CUSTOMER UNIT H and CUST. UNIT FACT. H. **Factory setting:** m
CUSTOMER UNIT H (706) Entry	Enter text (unit) for customer-specific level unit. You can enter a maximum of eight alphanumeric characters here. → See also CUST. UNIT FACT. H. **Prerequisite:** ▪ COMB. MEASURAND = Height and Volume, HEIGHT UNIT = User unit ▪ COMB. MEASURAND = Height and Mass, HEIGHT UNIT = User unit ▪ COMB. MEASURAND = Height and %, HEIGHT UNIT = User unit Only the first five characters are shown on the on-site display. For example, if "crates" is specified as the customer-specific unit, "crate" is displayed. If the unit contains a slash, up to eight characters can be shown on the on-site display. The maximum number of characters in the counter is again limited to five. For example, if "crates/m2" is specified as the customer-specific unit, "crate/m2" is displayed. In the FieldCare, all eight characters are displayed. In the HART handheld terminal, the customer-specific unit is only displayed in the CUSTOMER UNIT H parameter. The measured value is displayed with the additional text "User Unit". **Factory setting:** _ _ _ _ _ _ _ _
CUST. UNIT FACT. H (705) Entry	Enter conversion factor for a customer-specific level unit. The conversion factor must be entered in relation to the SI unit "m". → See also CUSTOMER UNIT H. **Prerequisite:** ▪ COMB. MEASURAND = Height and Volume, HEIGHT UNIT = User unit ▪ COMB. MEASURAND = Height and Mass, HEIGHT UNIT = User unit ▪ COMB. MEASURAND = Height and %, HEIGHT UNIT = User unit **Example:** – You want the measured value to be displayed in "PU" (PU: packing unit). – MEASURED VALUE = 0.5 m (1,6 ft) ≙ 1 PU – Entry CUSTOMER UNIT H: PU – Entry CUST. UNIT FACT. H: 2 – Result: MEASURED VALUE = 1 PU **Factory setting:** 1.0

Table 13: (GROUP SELECTION →) OPERATING MENU → SETTINGS → BASIC SETUP "Level", LEVEL MODE "Height Linearized"	
Parameter name	**Description**
UNIT VOLUME (313) Selection	Select the volume unit for the 2nd measured value. **Prerequisite:** ▪ COMB. MEASURAND = Height and Volume or %-Height and Volume **Options:** ▪ l ▪ hl ▪ cm^3 ▪ dm^3 ▪ m^3 ▪ m^3 E^3 ▪ ft ▪ ft^3 E^3 ▪ gal ▪ Igal ▪ bbl ▪ User unit, → see also the following parameter description for CUSTOMER UNIT V and CUST. UNIT FACT. V. **Factory setting:** m^3
CUSTOMER UNIT V (608) Entry	Enter text (unit) for customer-specific volume unit. You can enter a maximum of eight alphanumeric characters here. → See also CUST. UNIT FACT. V **Prerequisite:** ▪ COMB. MEASURAND = Height and Volume, HEIGHT UNIT = User unit ▪ COMB. MEASURAND = %-Height and Volume, HEIGHT UNIT = User unit Only the first five characters are shown on the on-site display. For example, if "crates" is specified as the customer-specific unit, "crate" is displayed. If the unit contains a slash, up to eight characters can be shown on the on-site display. The maximum number of characters in the counter is again limited to five. For example, if "crates/m2" is specified as the customer-specific unit, "crate/m2" is displayed. In the FieldCare, all eight characters are displayed. In the HART handheld terminal, the customer-specific unit is only displayed in the CUSTOMER UNIT V parameter. The measured value is displayed with the additional text "User Unit". **Factory setting:** – – – – – – – –
CUST. UNIT FACT. V (607) Entry	Enter conversion factor for a customer-specific volume unit. The conversion factor must be entered in relation to the SI unit "m^3". → See also CUSTOMER UNIT V. **Prerequisite:** ▪ COMB. MEASURAND = Height and Volume, HEIGHT UNIT = User unit ▪ COMB. MEASURAND = %-Height and Volume, HEIGHT UNIT = User unit **Example:** – You want the measured value to be displayed in "buckets". – MEASURED VALUE = 0.01 m3 ≙ 1 bucket – Entry CUSTOMER UNIT V: bucket – Entry CUST. UNIT FACT. V: 100 – Result: MEASURED VALUE = 1 bucket **Factory setting:** 1.0

Table 13: (GROUP SELECTION →) OPERATING MENU → SETTINGS → BASIC SETUP "Level", LEVEL MODE "Height Linearized"	
Parameter name	**Description**
MASS UNIT (709) Selection	Select the mass unit for the 2nd measured value. **Prerequisite:** ▪ COMB. MEASURAND = Height and Mass or %-Height and Mass **Options:** ▪ g ▪ kg ▪ t ▪ oz ▪ lb ▪ ton ▪ User unit, → see also the following parameter description for CUSTOMER UNIT M and CUST. UNIT FACT. M. **Factory setting:** kg
CUSTOMER UNIT M (704) Entry	Enter text (unit) for customer-specific mass unit. You can enter a maximum of eight alphanumeric characters here. → See also CUST. UNIT FACT. M. **Prerequisite:** ▪ COMB. MEASURAND = Height and Mass, MASS UNIT = User unit ▪ COMB. MEASURAND = %-Height and Mass, MASS UNIT = User unit Only the first five characters are shown on the on-site display. For example, if "crates" is specified as the customer-specific unit, "crate" is displayed. If the unit contains a slash, up to eight characters can be shown on the on-site display. The maximum number of characters in the counter is again limited to five. For example, if "crates/m2" is specified as the customer-specific unit, "crate/m2" is displayed. In the FieldCare, all eight characters are displayed. In the HART handheld terminal, the customer-specific unit is only displayed in the CUSTOMER UNIT M parameter. The measured value is displayed with the additional text "User Unit". **Factory setting:** _ _ _ _ _ _ _ _
CUST. UNIT FACT. M (703) Entry	Enter conversion factor for a customer-specific mass unit. The conversion factor must be entered in relation to the SI unit "kg". → See also CUSTOMER UNIT M. **Prerequisite:** ▪ COMB. MEASURAND = Height and Mass, MASS UNIT = User unit ▪ COMB. MEASURAND = %-Height and Mass, MASS UNIT = User unit **Example:** – You want the measured value to be displayed in "buckets". – MEASURED VALUE = 10 kg ≙ 1 bucket – Entry CUSTOMER UNIT M: bucket – Entry CUST. UNIT FACT. M: 0.1 – Result: MEASURED VALUE = 1 bucket **Factory setting:** 1.0

Table 13: (GROUP SELECTION →) OPERATING MENU → SETTINGS → BASIC SETUP "Level", LEVEL MODE "Height Linearized"	
Parameter name	**Description**
LEVEL MIN (755) Entry	Enter the minimum level to be expected. The input limits for the calibration (editing limits) are derived from the value entered. The closer the value entered corresponds to the minimum level to be expected, the more accurate the measurement result. ▪ The following applies for the setting LEVEL MODE "Height Linearized" and ASSIGN CURRENT "Linear": If you enter a new value for LEVEL MIN, the value for SET LRV is also changed. Use SET LRV to assign a height to the lower current value. If you want to assign the lower current value a value other than that for LEVEL MIN, you must enter the desired value for SET LRV. (→ SET LRV, Page 102 and ASSIGN CURRENT, Page 114) **Factory setting:** 0.0
LEVEL MAX (712) Entry	Enter the maximum level to be expected. The input limits for the calibration (editing limits) are derived from the value entered. The closer the value entered corresponds to the maximum level to be expected, the more accurate the measurement result. ▪ The following applies for the setting LEVEL MODE "Height Linearized" and ASSIGN CURRENT "Linear": If you enter a new value for LEVEL MAX, the value for SET URV is also changed. Use SET URV to assign a height to the upper current value. If you want to assign the upper current value a value other than that for LEVEL MAX, you must enter the desired value for SET URV. (→ SET URV, Page 102 and ASSIGN CURRENT, Page 114) **Factory setting:** 100.0
CALIBRATION MODE (392) Selection	Select the calibration mode for the calibration of the 1st measured variable. **Options:** ▪ Wet Wet calibration takes place by filling the container. This calibration mode requires two pressure-level value pairs to be entered. In the case of two different levels, the level value is entered and the pressure measured at this moment is assigned to the level value. → See also the following parameter description for EMPTY CALIB., EMPTY PRESSURE, FULL CALIB. and FULL PRESSURE. ▪ Dry Dry calibration is a theoretical calibration which you can carry out even if the device is not mounted or the container is empty. – For the "Level" measured variable, the density of the fluid (→ see Page 94, ADJUST DENSITY) must be entered. – For the "%" measured variable, the density of the fluid must be entered and a level assigned to the 100 % point (→ see Page 94, ADJUST DENSITY and 100% POINT). If the measurement should not start at the mounting location of the device, a level offset must be entered (→ see Page 96, ZERO POSITION). If the change to dry calibration is made after a wet calibration, the density must be entered correctly using the ADJUST DENSITY and DENSITY PROCESS parameter before changing the calibration mode. → See also Page 101. **Factory setting:** Wet
EMPTY CALIB. (314) Entry	Enter level value for the lower calibration point (container empty). The container is either empty or part full. By entering a value for this parameter, you are assigning a level value to the pressure present at the device. → See also EMPTY PRESSURE. **Prerequisite:** ▪ CALIBRATION MODE = Wet **Factory setting:** 0.0

Table 13: (GROUP SELECTION →) OPERATING MENU → SETTINGS → BASIC SETUP "Level", LEVEL MODE "Height Linearized"	
Parameter name	**Description**
EMPTY PRESSURE (710) Display	Displays the pressure value for the lower calibration point (container empty). → See also EMPTY CALIB. **Prerequisite:** ▪ CALIBRATION MODE = Wet
FULL CALIB. (315) Entry	Enter level value for the upper calibration point (container full). The container is either completely or almost full. By entering a value for this parameter, you are assigning a level value to the pressure present at the device. → See also FULL PRESSURE. **Prerequisite:** ▪ CALIBRATION MODE = Wet **Factory setting:** 100.0
FULL PRESSURE (711) Display	Displays the pressure value for the upper calibration point (container full). → See also FULL CALIB. **Prerequisite:** ▪ CALIBRATION MODE = Wet **Factory setting:** High sensor limit (→ see PRESS. SENS HILIM, Page 120)
ADJUSTED DENSITY (810) Display	Displays the density calculated from the upper and lower level point. **Prerequisite:** ▪ COMB. MEASURAND = Height and Volume, CALIBRATION MODE = Wet ▪ COMB. MEASURAND = Height and Mass, CALIBRATION MODE = Wet ▪ COMB. MEASURAND = Height and %, CALIBRATION MODE = Wet
DENSITY UNIT (812) Selection	Select density unit. **Prerequisite:** ▪ COMB. MEASURAND = %-Height and %, CALIBRATION MODE = Dry ▪ COMB. MEASURAND = %-Height and Volume, CALIBRATION MODE = Dry ▪ COMB. MEASURAND = %-Height and Mass, CALIBRATION MODE = Dry ▪ COMB. MEASURAND = Height and %, CALIBRATION MODE = Dry ▪ COMB. MEASURAND = Height and Volume, CALIBRATION MODE = Dry ▪ COMB. MEASURAND = Height and Mass, CALIBRATION MODE = Dry **Options:** ▪ g/cm^3 ▪ kg/dm^3 ▪ kg/m^3 ▪ US lb/in^3 ▪ US lb/ft^3 **Factory setting:** kg/dm^3
ADJUST DENSITY (316) Entry	Enter density of fluid. **Prerequisite:** ▪ CALIBRATION MODE = Dry **Factory setting:** 1.0 (kg/dm^3)

Table 13: (GROUP SELECTION →) OPERATING MENU → SETTINGS → BASIC SETUP "Level", LEVEL MODE "Height Linearized"	
Parameter name	**Description**
HEIGHT UNIT (708) Selection	Select level unit. **Prerequisite:** ▪ COMB. MEASURAND = %-Height and Volume, CALIBRATION MODE = Dry ▪ COMB. MEASURAND = %-Height and Mass, CALIBRATION MODE = Dry ▪ COMB. MEASURAND = %-Height + %, CALIBRATION MODE = Dry **Options:** ▪ mm ▪ dm ▪ cm ▪ m ▪ inch ▪ ft ▪ User unit, → see also the following parameter description for CUSTOMER UNIT H and CUST. UNIT FACT. H. **Factory setting:** m
CUSTOMER UNIT H (706) Entry	Enter text (unit) for customer-specific level unit. You can enter a maximum of eight alphanumeric characters here. → See also CUST. UNIT FACT. H. **Prerequisite:** ▪ COMB. MEASURAND = %-Height and Volume, CALIBRATION MODE = Dry, HEIGHT UNIT = User unit ▪ COMB. MEASURAND = %-Height and Mass, CALIBRATION MODE = Dry, HEIGHT UNIT = User unit ▪ COMB. MEASURAND = %-Height and %, CALIBRATION MODE = Dry, HEIGHT UNIT = User unit Only the first five characters are shown on the on-site display. For example, if "crates" is specified as the customer-specific unit, "crate" is displayed. If the unit contains a slash, up to eight characters can be shown on the on-site display. The maximum number of characters in the counter is again limited to five. For example, if "crates/m2" is specified as the customer-specific unit, "crate/m2" is displayed. In the FieldCare, all eight characters are displayed. In the HART handheld terminal, the customer-specific unit is only displayed in the CUSTOMER UNIT H parameter. The measured value is displayed with the additional text "User Unit". **Factory setting:** – – – – – – – –
CUST. UNIT FACT. H (705) Entry	Enter conversion factor for a customer-specific level unit. The conversion factor must be entered in relation to the SI unit "m". → See also CUSTOMER UNIT H. **Prerequisite:** ▪ COMB. MEASURAND = %-Height and Volume, CALIBRATION MODE = Dry, HEIGHT UNIT = User unit ▪ COMB. MEASURAND = %-Height and Mass, CALIBRATION MODE = Dry, HEIGHT UNIT = User unit ▪ COMB. MEASURAND = %-Height and %, CALIBRATION MODE = Dry, HEIGHT UNIT = User unit **Example:** – You want the measured value to be displayed in "PU" (PU: packing unit). – MEASURED VALUE = 0.5 m (1.6 ft) ≙ 1 PU – Entry CUSTOMER UNIT H: PU – Entry CUST. UNIT FACT. H: 2 – Result: MEASURED VALUE = 1 PU **Factory setting:** 1.0

Table 13: (GROUP SELECTION →) OPERATING MENU → SETTINGS → BASIC SETUP "Level", LEVEL MODE "Height Linearized"	
Parameter name	**Description**
100% POINT (813) Entry	Enter level value for 100% point. **Prerequisite:** ▪ COMB. MEASURAND = %-Height and Volume, CALIBRATION MODE = Dry ▪ COMB. MEASURAND = %-Height and Mass, CALIBRATION MODE = Dry ▪ COMB. MEASURAND = %-Height + %, CALIBRATION MODE = Dry **Example:** – The 100 %-point should correspond to 4 m (13 ft). – Select the "m" unit via the HEIGHT UNIT parameter. – Enter the value "4" for this parameter (100% POINT). **Factory setting:** 1.0
ZERO POSITION (814) Entry	Enter value for level offset. If the measurement should not start at the mounting location of the device, e.g. for containers with a sump, carry out zero point shift (level offset). **Prerequisite:** ▪ CALIBRATION MODE = Dry 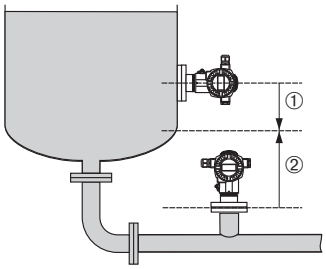 *Fig. 22: Zero point shift* *1 Device is mounted above the level lower range value: a positive value has to be entered for ZERO POSITION.* *2 Device is mounted below the level lower range value: a negative value has to be entered for ZERO POSITION.* **Factory setting:** 0.0
DAMPING VALUE (247) Entry	Enter damping time (time constant τ). The damping affects the speed at which all subsequent elements, such as the on-site display, measured value and current output react to a change in the pressure. **Input range:** 0.0...999.0 s **Factory setting:** 2.0 s or as per order specifications

Table 14: (GROUP SELECTION →) OPERATING MENU → SETTINGS → BASIC SETUP "Flow"	
Parameter name	**Description**
Prerequisite: ▪ MEASURING MODE = Flow	

Table 14: (GROUP SELECTION →) OPERATING MENU → SETTINGS → BASIC SETUP "Flow"	
Parameter name	**Description**
PRESS. ENG. UNIT (060) Selection	Select pressure unit. If a new pressure unit is selected, all pressure-specific parameters are converted and displayed with the new unit. **Options:** ▪ mbar, bar ▪ mmH2O, mH2O, inH2O, ftH2O 1) ▪ Pa, hPa, kPa, MPa ▪ psi ▪ mmHg, inHg 2) ▪ Torr ▪ g/cm^2, kg/cm^2 ▪ lb/ft^2 ▪ atm ▪ gf/cm^2, kgf/cm^2 ▪ User unit, → See also the following parameter description for CUSTOMER UNIT P and CUST. UNIT FACT. P. 1) The conversion factor of the pressure units refers to a reference temperature of 4 °C (39.2 °F). 2) The conversion factor of the pressure units refers to a reference temperature of 0 °C (32 °F). **Factory setting:** Depends on the sensor nominal measuring range mbar or bar or as per order specifications
CUSTOMER UNIT P (075) Entry	Enter text (unit) for customer-specific pressure unit. You can enter a maximum of eight alphanumeric characters here. → See also CUST. UNIT FACT. P. **Prerequisite:** ▪ PRESS. ENG. UNIT = User unit Only the first five characters are shown on the on-site display. For example, if "crates" is specified as the customer-specific unit, "crate" is displayed. If the unit contains a slash, up to eight characters can be shown on the on-site display. The maximum number of characters in the counter is again limited to five. For example, if "crates/m2" is specified as the customer-specific unit, "crate/m2" is displayed. In the FieldCare, all eight characters are displayed. In the HART handheld terminal, the customer-specific unit is only displayed in the CUSTOMER UNIT P parameter. The measured value is displayed with the additional text "User Unit". **Factory setting:** _ _ _ _ _ _ _ _
CUST. UNIT FACT. P (317) Entry	Enter conversion factor for a customer-specific pressure unit. The conversion factor must be entered in relation to the SI unit "Pa". → See also CUSTOMER UNIT P. **Prerequisite:** ▪ PRESS. ENG. UNIT = User unit **Example:** – You want the measured value to be displayed in "PU" (PU: packing unit). – MEASURED VALUE =10000 Pa ≙ 1 PU – Entry CUSTOMER UNIT P: PU – Entry CUST. UNIT FACT. P: 0.0001 – Result: MEASURED VALUE = 1 PU **Factory setting:** 1.0

Table 14: (GROUP SELECTION →) OPERATING MENU → SETTINGS → BASIC SETUP "Flow"	
Parameter name	**Description**
FLOW-MEAS. TYPE (640) Selection	Select the flow type. **Options:** ▪ Volume p. cond. (volume under operating conditions) ▪ Vol. norm. cond. (norm volume under norm conditions in Europe: 1013.25 mbar and 273.15 K (0°C)) ▪ Vol. std. cond. (standard volume under standard conditions in USA: 1013.25 mbar (14.7 psi) and 288.15 K (15°C/59°F)) ▪ Mass (mass under operating conditions) **Factory setting:** Volume p. cond.
UNIT FLOW (391) Selection	Select volume flow unit. When a new flow unit is selected, all flow-specific parameters are converted and displayed with the new unit within a flow mode (FLOW-MEAS. TYPE). When the flow mode is changed, conversion is not possible. **Prerequisite:** ▪ FLOW-MEAS. TYPE = Volume p. cond. **Options:** ▪ m3/s, m3/min, m3/h, m3/day ▪ l/s, l/min, l/h ▪ hl/s, hl/min, hl/day ▪ ft3/s, ft3/min, ft3/h, ft3/day ▪ ACFS, ACFM, ACFH, ACFD ▪ ozf/s, ozf/min ▪ US Gal/s, US Gal/min, US Gal/h, US Gal/day ▪ Imp. Gal/s, Imp. Gal/min, Imp. Gal/h ▪ bbl/s, bbl/min, bbl/h, bbl/day ▪ User unit, → see also this table, parameter description for CUSTOMER UNIT F and CUST. UNIT FACT. F **Factory setting:** m^3/s
NORM FLOW UNIT (661) Selection	Select norm volume flow unit. When a new flow unit is selected, all flow-specific parameters are converted and displayed with the new unit within a flow mode (FLOW-MEAS. TYPE). When the flow mode is changed, conversion is not possible. **Prerequisite:** ▪ FLOW-MEAS. TYPE = Vol. norm conditions **Options:** ▪ Nm3/s, Nm3/min, Nm3/h, Nm3/day ▪ User unit, → see also this table, parameter description for CUSTOMER UNIT F and CUST. UNIT FACT. F **Factory setting:** Nm^3/s
STD. FLOW UNIT (660) Selection	Select standard volume flow unit. When a new flow unit is selected, all flow-specific parameters are converted and displayed with the new unit within a flow mode (FLOW-MEAS. TYPE). When the flow mode is changed, conversion is not possible. **Prerequisite:** ▪ FLOW-MEAS. TYPE = Vol. std. conditions **Options:** ▪ Sm3/s, Sm3/min, Sm3/h, Sm3/day ▪ SCFS, SCFM, SCFH, SCFD ▪ User unit, → see also this table, parameter description for CUSTOMER UNIT F and CUST. UNIT FACT. F **Factory setting:** Sm^3/s

Table 14: (GROUP SELECTION →) OPERATING MENU → SETTINGS → BASIC SETUP "Flow"	
Parameter name	**Description**
MASS FLOW UNIT (571) Selection	Select mass flow unit. When a new flow unit is selected, all flow-specific parameters are converted and displayed with the new unit within a flow mode (FLOW-MEAS. TYPE). When the flow mode is changed, conversion is not possible. **Prerequisite:** ▪ FLOW-MEAS. TYPE = Mass **Options:** ▪ g/s, kg/s, kg/min, kg/min, kg/h ▪ t/s, t/min, t/h, t/day ▪ oz/s, oz/min ▪ lb/s, lb/min, lb/h ▪ ton/s, ton/min, ton/h, ton/day ▪ User unit, → see also the following parameter description for CUSTOMER UNIT F and CUST. UNIT FACT. F **Factory setting:** kg/s
CUSTOMER UNIT F (610) Entry	Enter text (unit) for customer-specific flow unit. You can enter a maximum of eight alphanumeric characters here. → See also CUST. UNIT FACT. F. **Prerequisite:** ▪ UNIT FLOW = User unit ▪ NORM FLOW UNIT = User unit ▪ STD. FLOW UNIT = User unit ▪ MASS FLOW UNIT = User unit Only the first five characters are shown on the on-site display. For example, if "crates" is specified as the customer-specific unit, "crate" is displayed. If the unit contains a slash, up to eight characters can be shown on the on-site display. The maximum number of characters in the counter is again limited to five. For example, if "crates/m2" is specified as the customer-specific unit, "crate/m2" is displayed. In the FieldCare, all eight characters are displayed. In the HART handheld terminal, the customer-specific unit is only displayed in the CUSTOMER UNIT F parameter. The measured value is displayed with the additional text "User Unit". **Factory setting:** – – – – – – – –
CUST. UNIT FACT. F (609) Entry	Enter conversion factor for a customer-specific flow unit. The conversion factor must be entered in relation to an appropriate SI unit, e.g. m^3/s for the "Volume p. cond." flow mode. → See also CUSTOMER UNIT F. **Prerequisite:** ▪ UNIT FLOW = User unit ▪ NORM FLOW UNIT = User unit ▪ STD. FLOW UNIT = User unit ▪ MASS FLOW UNIT = User unit **Example:** – You want the measured value to be displayed in "bucket/h". – MEASURED VALUE =0.01 m3/s ≙ 3600 bucket/h – Entry CUSTOMER UNIT F: bucket/h – Entry CUST. UNIT FACT. F: 360000 – Result: MEASURED VALUE = 3600 bucket/h **Factory setting:** 1.0

Table 14: (GROUP SELECTION →) OPERATING MENU → SETTINGS → BASIC SETUP "Flow"	
Parameter name	**Description**
MAX. FLOW (311) Entry	Enter maximum flow of primary element. → See also layout sheet of primary element. The maximum flow is assigned to the maximum pressure which you enter via MAX PRESS. FLOW. Use the LINEAR/SQROOT parameter (→ Page 114) to specify the current signal for the "Flow" measuring mode. The following applies for the "Flow (square root)" setting: If you enter a new value for MAX. FLOW, the value for SET URV is also changed. Use SET URV to assign a flow to the upper current value. If you want to assign the upper current value a value other than that for MAX. FLOW, you must enter the desired value for SET URV. (→ SET URV, Page 104). **Factory setting:** 1.0
MAX PRESS. FLOW (634) Entry	Enter maximum pressure of primary element. → See layout sheet of primary element. This value is assigned to the maximum flow value (→ see MAX. FLOW). Use the LINEAR/SQROOT parameter (→ Page 114) to specify the current signal for the "Flow" measuring mode. The following applies for the "Differential pres." setting: If you enter a new value for MAX PRESS. FLOW, the value for SET URV is also changed. Use SET URV to assign a pressure value to the upper current value. If you want to assign the upper current value a value other than that for MAX PRESS. FLOW, you must enter the desired value for SET URV. (→ SET URV, Page 104). **Factory setting:** High sensor limit (→ see PRESS. SENS HILIM, Page 120)
DAMPING VALUE (247) Entry	Enter damping time (time constant τ). The damping affects the speed at which all subsequent elements, such as the on-site display, measured value and current output react to a change in the pressure. **Input range:** 0.0...999.0 s **Factory setting:** 2.0 s or as per order specifications

Table 15: (GROUP SELECTION →) OPERATING MENU → SETTINGS → EXTENDED SETUP "Pressure"	
Parameter name	**Description**
Prerequisite: ▪ MEASURING MODE = Pressure	
TEMP. ENG. UNIT (318) Selection	Select the unit for the temperature measured values. → See also PCB TEMPERATURE (Page 117) and SENSOR TEMP. (Page 121). **Options:** ▪ °C ▪ °F ▪ K ▪ R **Factory setting:** °C

Table 16: (GROUP SELECTION →) OPERATING MENU → SETTINGS → EXTENDED SETUP "Level"	
Parameter name	**Description**
Prerequisite: ▪ MEASURING MODE = Level	

Table 16: (GROUP SELECTION →) OPERATING MENU → SETTINGS → EXTENDED SETUP "Level"	
Parameter name	**Description**
TEMP. ENG. UNIT (318) Selection	Select the unit for the temperature measured values. → See also PCB TEMPERATURE (Page 117) and SENSOR TEMP. (Page 122). **Options:** ▪ °C ▪ °F ▪ K ▪ R **Factory setting:** °C
DENSITY UNIT (001)/ (812) Options	Select density unit. **Options:** ▪ g/cm^3 ▪ kg/dm^3 ▪ kg/m^3 ▪ US lb/in^3 ▪ US lb/ft^3 **Factory setting:** kg/dm^3
ADJUST DENSITY (007)/(316) Entry	Enter density of fluid. **⚠ CAUTION** **Note Dependencies when setting parameters!** ▶ LIN. MEASURAND: "% (Level)", "Mass" and "Volume" and MEASUAND KOMB.: If a change to dry calibration is made after a wet calibration using the CALIBRATION MODE parameter (→ Page 82 or 93), the density for this parameter must be entered correctly before changing the calibration mode. ▶ In the event that the pressure falls with increasing levels (LIN. MEASURED: Volume), such as in the case of a residual volume measurement, a negative value shall be entered for this parameter. **Factory setting:** 1.0 (kg/dm^3)
PROCESS DENSITY (025)/(811) Entry	Enter a new density value for density correction. The calibration was carried out with the medium water, for example. Now the container is to be used for another fluid with another density. The calibration is corrected appropriately by entering the new density value in the PROCESS DENSITY parameter. LIN. MEASURAND: "% (Level)", "Mass" and "Volume" and MEASUAND KOMB.: If a change to dry calibration is made after a wet calibration using the CALIBRATION MODE parameter (→ Page 82 or 93), the density for this parameter must be entered correctly before changing the calibration mode. In the event that the pressure falls with increasing levels (LIN. MEASURED: Volume), such as in the case of a residual volume measurement, a negative value shall be entered for this parameter. **Factory setting:** 1.0

Table 16: (GROUP SELECTION →) OPERATING MENU → SETTINGS → EXTENDED SETUP "Level"	
Parameter name	**Description**
SET LRV (762) Entry	Enter value for the lower current value (4 mA). **Prerequisite:** ▪ LEVEL MODE = Pressure Linearized or Height Linearized ▪ For the LEVEL MODE "Height Linearized", you can use the ASSIGN CURRENT parameter (→ Page 114) to specify whether the current output should depict the 1st or 2nd measured variable (height or tank content). Depending on the setting of the ASSIGN CURRENT parameter, enter the following value for SET LRV: – ASSIGN CURRENT = tank content (factory setting) ⇒ %- value, volume value or mass value – ASSIGN CURRENT = height ⇒ level value The following applies for the LEVEL MODE "Pressure Linearized" or LEVEL MODE "Height Linearized" + ASSIGN CURRENT "Tank content": ▪ If you enter a new value for TANK CONTENT MIN, the value for SET LRV is also changed. If you want to assign the lower current value a value other than that for TANK CONTENT MIN, you must enter the desired value for SET LRV. (→ TANK CONTENT MIN, Page 104 or 107.) The following applies for the LEVEL MODE "Height Linearized" + ASSIGN CURRENT "Height": ▪ If you enter a new value for LEVEL MIN, the value for SET LRV is also changed. If you want to assign the lower current value a value other than that for LEVEL MIN, you must enter the desired value for SET LRV. (→ LEVEL MIN, Page 93.) **Factory setting:** 0.0
SET URV (763) Entry	Enter value for the upper current value (20 mA). **Prerequisite:** ▪ LEVEL MODE = Pressure Linearized or Height Linearized ▪ For the LEVEL MODE "Height Linearized", you can use the ASSIGN CURRENT parameter (→ Page 114) to specify whether the current output should depict the 1st or 2nd measured variable (height or tank content). Depending on the setting of the ASSIGN CURRENT parameter, enter the following value for SET URV: – ASSIGN CURRENT = tank content (factory setting) ⇒ %- value, volume value or mass value – ASSIGN CURRENT = height ⇒ level value The following applies for the LEVEL MODE "Pressure Linearized" or LEVEL MODE "Height Linearized" + ASSIGN CURRENT "Tank content": ▪ If you enter a new value for TANK CONTENT MAX, the value for SET URV is also changed. If you want to assign the upper current value a value other than that for TANK CONTENT MAX, you must enter the desired value for SET URV. (→ TANK CONTENT MAX, Page 104 or 107.) The following applies for the LEVEL MODE "Height Linearized" + ASSIGN CURRENT "Height": ▪ If you enter a new value for LEVEL MAX, the value for SET URV is also changed. If you want to assign the lower current value a value other than that for LEVEL MAX, you must enter the desired value for SET URV. (→ LEVEL MAX, Page 93.) **Factory setting:** 100.0

Table 17: (GROUP SELECTION →) OPERATING MENU → SETTINGS → EXTENDED SETUP "Flow"	
Parameter name	**Description**
Prerequisite: ▪ MEASURING MODE = Flow	

Table 17: (GROUP SELECTION →) OPERATING MENU → SETTINGS → EXTENDED SETUP "Flow"	
Parameter name	**Description**
TEMP. ENG. UNIT (318) Selection	Select the unit for the temperature measured value. → See also PCB TEMPERATURE (Page 117) and SENSOR TEMP. (Page 123). **Options:** ▪ °C ▪ °F ▪ K ▪ R **Factory setting:** °C
LOW FLOW CUT-OFF (442) Selection	Switches "low flow cut-off" function on and off. In the lower measuring range, small flow quantities (creepages) can lead to large measured value fluctuations. Switching on this function stops these flow quantities from being recorded. → See also SET. L. FL. CUT-OFF. **Options:** ▪ Off ▪ On **Factory setting:** Off
SET. L. FL. CUT-OFF (323) Entry	Enter switch-off point of low flow cut-off. The hysteresis between the switch-on point and the switch-off point is always 1 % of the end flow value. → See also LOW FLOW CUT-OFF. **Prerequisite:** ▪ LOW FLOW CUT-OFF = on **Input range:** Switch-off point: 0...50 % of end flow value (→ MAX. FLOW). 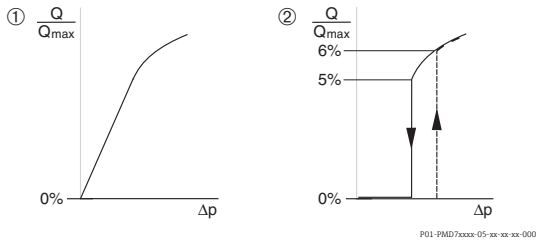 **Factory setting:** 5 % (of end flow value)
SET LRV (637) Entry	Depending on the setting in the LINEAR/SQROOT parameter (→ Page 114), enter a flow value or a pressure value for the lower current value (4 mA) here. ▪ LINEAR/SQROOT = Flow (square root) (factory setting) ⇒ flow value ▪ LINEAR/SQROOT = Differential pres. ⇒ pressure value **Factory setting:** 0

Table 17: (GROUP SELECTION →) OPERATING MENU → SETTINGS → EXTENDED SETUP "Flow"	
Parameter name	**Description**
SET URV (638) Entry	Depending on the setting in the LINEAR/SQROOT parameter (→ Page 114), enter a flow value or a pressure value for the upper current value (20 mA) here. ▪ LINEAR/SQROOT = Flow (square root) (factory setting) ⇒ flow value ▪ LINEAR/SQROOT = Differential pres. ⇒ pressure value The following applies for the setting LINEAR/SQROOT "Flow (square root)": ▪ If you enter a new value for MAX. FLOW, the value for SET URV is also changed. If you want to assign the upper current value a value other than that for MAX. FLOW, you must enter the desired value for SET URV. (→ MAX. FLOW, Page 100). The following applies for the setting LINEAR/SQROOT "Differential pres.": ▪ If you enter a new value for MAX PRESS. FLOW, the SET URV value is also changed. If you want to assign the upper current value a value other than that for MAX PRESS. FLOW, you must enter the desired value for SET URV. (→ MAX PRESS. FLOW, Page 100). **Factory setting:** MAX. FLOW

Table 18: (GROUP SELECTION →) OPERATING MENU → SETTINGS → LINEARISATION – on-site operation	
Parameter name	**Description**
Prerequisite: ▪ MEASURING MODE = Level ▪ LEVEL MODE = Pressure Linearized or Height Linearized	
TANK CONTENT MIN (759) Entry	Enter the minimum tank contents to be expected. The input limits for the calibration (editing limits) are derived from the value entered. The closer the value entered corresponds to the minimum tank content to be expected, the more accurate the measurement result. ▪ If you enter a new value for TANK CONTENT MIN, the value for SET LRV is also changed. Use SET LRV to assign a %-value, volume value or mass value to the lower current value. If you want to assign the lower current value a value other than that for TANK CONTENT MIN, you must enter the desired value for SET LRV. (→ SET LRV, Page 102). ▪ For the setting LEVEL MODE "Height Linearized" and ASSIGN CURRENT "Linear", the TANK CONTENT MIN parameter does not affect the SET LRV parameter. (→ SET LRV, Page 102 and ASSIGN CURRENT, Page 114) **Factory setting:** 0.0
TANK CONTENT MAX (713) Entry	Enter the maximum tank contents to be expected. The input limits for the subsequent calibration (editing limits) are derived from the value entered. The closer the value entered corresponds to the maximum tank content to be expected, the more accurate the measurement result. ▪ If you enter a new value for TANK CONTENT MAX, the value for SET URV is also changed. Use SET URV to assign a %-value, volume value or mass value to the upper current value. If you want to assign the upper current value a value other than that for TANK CONTENT MAX, you must enter the desired value for SET URV. (→ SET URV, Page 102.) ▪ For the setting LEVEL MODE "Height Linearized" and ASSIGN CURRENT "Linear", the TANK CONTENT MAX parameter does not affect the SET URV parameter. (→ SET URV, Page 102 and ASSIGN CURRENT, Page 114) **Factory setting:** 100.0

Table 18: (GROUP SELECTION →) OPERATING MENU → SETTINGS → LINEARISATION – on-site operation

Parameter name	Description
TABLE SELECTION (808) Selection	Select table. The device works with a measuring and an editor table. The measuring table is used to calculate the measured value. To make sure measuring also runs properly when entering a new table, there is another table, the editor table, for entering new values. **Options:** ▪ View meas. table ▪ Editor table **Factory setting:** View meas. table
LIN. EDIT MODE (397) Selection	Select the entry mode for the linearisation table. **Prerequisite:** ▪ TABLE SELECTION = Editor table **Options:** ▪ Manual: the container neither has to be filled nor emptied for this entry mode. Enter the value pairs for the linearisation table. ▪ Semiautomatic: the container is filled or emptied in stages in this entry mode. The device automatically records the hydrostatic pressure. The associated volume, mass or %-value is entered. **Factory setting:** Manual
EDITOR TABLE (809) Selection	Select table. **Prerequisite:** ▪ TABLE SELECTION = editor table **Options:** ▪ New table: enter new linearisation table. ▪ Edit measure table: The measuring table is loaded as an editor table so that changes can be made. → See also TAB. SELECTION ▪ Continue edit: Edit an editor table that already exists. → See also TABLE EDITOR (770) **Factory setting:** New table
EDITOR TABLE Entry ("Semiautomatic" edit mode) – LINE-NUMB (549) – Y-VAL. (551)	Enter table in the "Semiautomatic" editing mode. A linearisation table must have at least 2 points and may not have more than 32 points. A point consists of LINE-NUMB, X-VAL. and Y-VAL. For this editing mode, the container is filled or emptied in stages. **Example:** Enter point for LEVEL MODE = Pressure Linearized – LINE-NUMB: confirm value displayed. – Y-VAL.: depending on the setting in the LINd. MEASURAND parameter, enter the volume, mass or % value. – X-VAL.: the hydrostatic pressure present is displayed and saved by confirming the Y-value. **Example:** Enter point for LEVEL MODE = Height Linearized – LINE-NUMB: confirm value displayed. – Y-VAL.: depending on the setting in the COMB. MEASURAND parameter, enter the volume, mass or % value. – X-VAL.: the hydrostatic pressure present is measured. Depending on the setting in the COMB. MEASURAND parameter, the measured pressure is converted to a level unit or a % and displayed. The value is saved by confirming the Y-value. **Factory setting:** LINE-NUMB = 1, X-VAL. = 0.0, Y-VAL. = 0.0

Table 18: (GROUP SELECTION →) OPERATING MENU → SETTINGS → LINEARISATION – on-site operation	
Parameter name	**Description**
EDITOR TABLE Entry ("manual" edit mode) – LINE-NUMB (549) – Y-VAL. (551) – X-VAL. (550)	Enter table in the "manual" editing mode. A linearisation table must have at least 2 points and may not have more than 32 points. A point consists of a line number, X-value and Y-value. The container neither has to be filled nor emptied for this editing mode. **Example:** Enter point for LEVEL MODE = Pressure Linearized – LINE-NUMB: confirm value displayed. – X-VAL.: enter pressure value. – Y-VAL.: depending on the setting in the LINd. MEASURAND parameter, enter the related volume, mass or % value. **Example:** Enter point for LEVEL MODE = Height Linearized – LINE-NUMB: confirm value displayed. – X-VAL.: the hydrostatic pressure present is measured. Depending on the setting in the COMB. MEASURAND parameter, enter a level value or % value. – Y-VAL.: depending on the setting in the COMB. MEASURAND parameter, enter the related volume, mass or % value. **Factory setting:** LINE-NUMB = 1, X-VAL. = 0.0, Y-VAL. = 0.0
EDITOR TABLE (770) Options	Select the function for the editor table. **Options:** ▪ Next point: enter next point. ▪ Last input point: jump back to previous point to correct a mistake for example. ▪ Accept input table: save editor table as measuring table. This overwrites the old measuring table. ▪ Abort: save values entered up to this point for the editor table and display next parameter. The editor table is not activated as a measuring table. ▪ Insert point: see example below. ▪ Delete point: the current point is deleted. See example below. **Example:** Add point, in this case between the 4th and 5th point for example – Select point 5 via the EDITOR TABLE/LINE NUMB parameter. – Confirm current X and Y values with Enter. – Using the TABLE EDITOR (770) parameter, select the option "Insert point". – Point 5 is displayed for the TABLE EDITOR/LINE NUMB parameter. New values for the X-VAL and Y-VAL parameters. **Example:** delete point, in this case the 5th point for example – Select point 5 via the EDITOR TABLE/LINE NUMB parameter. – Using the TABLE EDITOR (770) parameter, select the option "Delete point". – The 5th point is deleted. All of the following points are pushed up one number i.e. following deletion, the 6th point becomes Point 5. **Factory setting:** Next point
MEASURING TABLE (549) Display	A point of the linearisation table saved (measuring table) appears on the display The parameter first displays the first point of the linearisation table. By entering a line number, you can directly display the corresponding point in the linearisation table.
MEASURING TABLE (717) Selection	Select the function for the measuring table. **Options:** ▪ Next point: view next point of the measuring table. ▪ Last input point: view previous point of the measuring table. ▪ Abort: cancel measuring table display. Display next parameter. **Factory setting:** Next point
TANK DESCRIPTION (815) Entry	Enter tank description. (max. 32 alphanumeric characters) **Factory setting:** _

Table 19: (GROUP SELECTION →) OPERATING MENU → SETTINGS → LINEARISATION – Digital communication	
Parameter name	**Description**
Prerequisite: ▪ MEASURING MODE = Level ▪ LEVEL MODE = Pressure Linearized or Height Linearized	
TANK CONTENT MIN Entry	Enter the minimum tank contents to be expected. The input limits for the calibration (editing limits) are derived from the value entered. The closer the value entered corresponds to the minimum tank content to be expected, the more accurate the measurement result. ▪ If you enter a new value for TANK CONTENT MIN, the value for SET LRV is also changed. Use SET LRV to assign a %-value, volume value or mass value to the lower current value. If you want to assign the lower current value a value other than that for TANK CONTENT MIN, you must enter the desired value for SET LRV. (→ SET LRV, Page 102). ▪ For the setting LEVEL MODE "Height Linearized" and ASSIGN CURRENT "Linear", the TANK CONTENT MIN parameter does not affect the SET LRV parameter. (→ SET LRV, Page 102 and ASSIGN CURRENT, Page 114) **Factory setting:** 0.0
TANK CONTENT MAX Entry	Enter the maximum tank contents to be expected. The input limits for the subsequent calibration (editing limits) are derived from the value entered. The closer the value entered corresponds to the maximum tank content to be expected, the more accurate the measurement result. ▪ If you enter a new value for TANK CONTENT MAX, the value for SET URV is also changed. Use SET URV to assign a %-value, volume value or mass value to the upper current value. If you want to assign the upper current value a value other than that for TANK CONTENT MAX, you must enter the desired value for SET URV. (→ SET URV, Page 102.) ▪ For the setting LEVEL MODE "Height Linearized" and ASSIGN CURRENT "Linear", the TANK CONTENT MAX parameter does not affect the SET URV parameter. (→ SET URV, Page 102 and ASSIGN CURRENT, Page 114) **Factory setting:** 100.0
TABLE SELECTION Selection	Select table. The device works with a measuring and an editor table. The measuring table is used to calculate the measured value. To make sure measuring also runs properly when entering a new table, there is another table, the editor table, for entering new values. **Options:** ▪ View meas. table ▪ Editor table **Factory setting:** View meas. table
LIN. EDIT MODE Selection	Select the entry mode for the linearisation table. **Prerequisite:** ▪ TABLE SELECTION = Editor table **Options:** ▪ Manual: The container neither has to be filled nor emptied for this entry mode. Enter the value pairs for the linearisation table. ▪ Semiautomatic: the container is filled or emptied in stages in this entry mode. The device automatically records the hydrostatic pressure. The associated volume, mass or %-value is entered. **Factory setting:** Manual

Table 19: (GROUP SELECTION →) OPERATING MENU → SETTINGS → LINEARISATION – Digital communication	
Parameter name	**Description**
EDITOR TABLE Selection	Select table. **Prerequisite:** ▪ TABLE SELECTION = Editor table **Options:** ▪ New table: Enter new linearisation table. ▪ View meas. table: View saved linearisation table and change points if necessary. ▪ Continue edit: Edit a linearisation table that already exists. Operating program: ▪ If you select the "View meas. table" option, the saved measuring table is loaded in the operating priogram. Use the "Lin.-Tab." window to view the entire table, change values if necessary and write the modified table to the device. ▪ If you change a value via the X-VAL. or Y-VAL. parameters, the table in the "Lin.-Tab." window is not updated. To view the table saved in the device, this table must first be read out of the device. **Factory setting:** New table
LINE-NUMB Entry	Enter the line number for the linearisation table. A linearisation table must have at least 2 points and may not have more than 32 points. ▪ TABLE SELECTION = View meas. table Via this parameter you can select the point of the linearisation table which should be displayed. ▪ TABLE SELECTION = Editor table Enter a point via the LINE-NUMB, X-VAL. and Y-VAL. parameters. → See also this table, parameter description for LIN. EDIT MODE, X-VAL. ("Manual" entry mode), X-VAL. ("Semiautomatic" entry mode) and Y-VAL. In the operating program, you can enter a complete linearisation table (Menu "Device Operation" → "Device Functions" → "Additional Functions" → "Linearization Table").
X-VAL. ("Manual" entry mode) Entry	Enter the pressure value for the linearisation table. → See also LIN. EDIT MODE, LINE-NUMB and Y-VAL. **Prerequisite:** ▪ TABLE SELECTION = Editor table
X-VAL. ("Semiautomatic" entry mode) Display	In the "Semiautomatic" entry mode, the container is filled or emptied in stages. The X-VAL. displays the measured hydrostatic pressure. **Prerequisite:** ▪ TABLE SELECTION = Editor table **Operating program** The X-VAL. is saved by confirming the Y-value. **HART Handheld** Confirm X-VAL. displayed. → See also LIN. EDIT MODE, LINE-NUMB and Y-VAL.
Y-VAL. Entry	Enter the volume, mass or %-value belonging to the X-VAL. for the linearisation table. **Prerequisite:** ▪ TABLE SELECTION = Editor table Depending on the setting in the LINd. MEASURAND or COMB. MEASURAND parameters, enter a volume, mass or %-value here. → See also this table, parameter description for LIN. EDIT MODE, LINE-NUMB, X-VAL. ("Manual" entry mode), X-VAL. ("Semiautomatic" entry mode).

Table 19: (GROUP SELECTION →) OPERATING MENU → SETTINGS → LINEARISATION – Digital communication	
Parameter name	**Description**
EDITOR TABLE Options	Select the function for the editor table. **Prerequisite:** ▪ TABLE SELECTION = Editor table **Options:** ▪ Next point: without function ▪ Last input point: without function ▪ Accept input table: save editor table as measuring table. This overwrites the old measuring table. ▪ Abort: save values entered up to this point for the editor table and display next parameter. The editor table is not activated as a measuring table. ▪ Insert point: see example below. ▪ Delete point: the current point is deleted. See example below. **Example:** Add point, in this case between the 4th and 5th point for example – Select point 5 via the LINE NUMB parameter. – Using the TABLE EDITOR parameter, select the option "Insert point". – Point 5 is displayed for the LINE NUMB parameter. New values for the X-VAL and Y-VAL parameters. **Example:** delete point, in this case the 5th point for example – Select point 5 via the LINE NUMB parameter. – Using the TABLE EDITOR parameter, select the option "Delete point". – The 5th point is deleted. All of the following points are pushed up one number i.e. following deletion, the 6th point becomes Point 5. **Factory setting:** Next point
ACTIV LIN. TAB. X Display	An X-value of the linearisation table already saved appears on the display You can select a point of the linearisation table via the LINE-NUMB parameter. **Prerequisite:** ▪ TABLE SELECTION = View meas. table In the operating program, you can view the entire saved table (Menu "Device Operation" → "Device Functions" → "Additional Functions" → "Linearization Table").
ACTIV LIN. TAB. Y Display	A Y-value of the linearisation table already saved appears on the display You can select a point of the linearisation table via the LINE-NUMB parameter. **Prerequisite:** ▪ TABLE SELECTION = View meas. table In the operating program, you can view the entire saved table (Menu "Device Operation" → "Device Functions" → "Additional Functions" → "Linearization Table").
TANK DESCRIPTION Entry	Enter tank description. (max. 32 alphanumeric characters) **Factory setting:** _
TABLE ACTIVATE	Save editor table as measuring table. This overwrites the old measuring table.

Table 20: (GROUP SELECTION →) OPERATING MENU → SETTINGS → TOTALIZER SETUP	
Parameter name	**Description**
Prerequisite: ▪ MEASURING MODE = Flow	

Table 20: (GROUP SELECTION →) OPERATING MENU → SETTINGS → TOTALIZER SETUP	
Parameter name	**Description**
TOTALIZER 1 UNIT (398), (666), (664), (662) Selection	Select unit for totalizer 1. Depending on the setting in the FLOW-MEAS. TYPE parameter (→ Page 98) this parameter offers a list of volume, norm volume, standard volume and mass units. When a new volume or mass unit is selected, totalizer-specific parameters are converted and displayed with the new unit within a unit group. When the flow mode is changed, the totalizer value is not converted. The 3-digit ID number on the on-site display depends on the FLOW-MEAS. TYPE selected: – (398): FLOW-MEAS. TYPE "Volume p. cond." – (662): FLOW-MEAS. TYPE "Mass" – (664): FLOW-MEAS. TYPE "Gas. std. cond." – (666): FLOW-MEAS. TYPE "Gas. norm conditions" **Factory setting:** m^3
TOT. 1 USER UNIT (627) Entry	Enter text (unit) for customer-specific unit for totalizer 1. You can enter a maximum of eight alphanumeric characters here. → See also FACT. U. U. TOTAL. 1. **Prerequisite:** ▪ TOTALIZER 1 UNIT = User unit Only the first five characters are shown on the on-site display. For example, if "crates" is specified as the customer-specific unit, "crate" is displayed. If the unit contains a slash, up to eight characters can be shown on the on-site display. The maximum number of characters in the counter is again limited to five. For example, if "crates/m2" is specified as the customer-specific unit, "crate/m2" is displayed. In the FieldCare, all eight characters are displayed. In the HART handheld terminal, the customer-specific unit is only displayed in the TOT. 1 USER UNIT parameter. The measured value is displayed with the additional text "User Unit". **Factory setting:** – – – – – – – –
FACT. U. U. TOTAL. 1 (329) Entry	Enter conversion factor for a customer-specific unit for totalizer 1. The conversion factor must be entered in relation to an appropriate SI unit, e.g. m^3 for the "Volume p. cond." FLOW-MEAS. TYPE. → See also TOT. 1 USER UNIT. **Prerequisite:** ▪ TOTALIZER 1 UNIT = User unit **Example:** You want the measured value to be displayed in "buckets". – MEASURED VALUE =1 m3 ≙ 100 buckets – Entry TOT. 1 USER UNIT: bucket – Entry FACT. U. U. TOTAL. 1: 100 – Result: MEASURED VALUE = 100 buckets **Factory setting:** 1.0
NEG. FLOW TOT. 1 (400) Selection	Specify way of counting negative flows for totalizer 1. 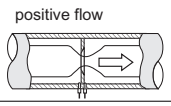 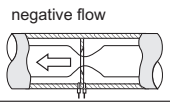 Options: positive flow / negative flow Inc. on. neg. flow: Total increases / Total increases Dec. on neg. flow: Total increases / Total decreases Stop on neg. flow: Total increases / Total remains constant P01-xMD7xxxx-16-xx-xx-xx-003 **Factory setting:** Inc. on neg. flow

Table 20: (GROUP SELECTION →) OPERATING MENU → SETTINGS → TOTALIZER SETUP	
Parameter name	**Description**
RESET TOTALIZER1 (331) Selection	You reset totalizer 1 to zero with this parameter. **Options:** ▪ Abort (do not reset) ▪ Reset **Factory setting:** Abort
TOTALIZER 2 UNIT (399), (663), (665), (667) Selection	Select unit for totalizer 2. → See also TOTAL 1. ENG. UNIT. The 3-digit ID number on the on-site display depends on the FLOW-MEAS. TYPE selected: – (399): FLOW-MEAS. TYPE "Volume p. cond." – (663): FLOW-MEAS. TYPE "Mass" – (665): FLOW-MEAS. TYPE "Vol. std. cond." – (667): FLOW-MEAS. TYPE "Vol. norm conditions" **Factory setting:** m^3
TOT. 2 USER UNIT (628) Entry	Enter text (unit) for customer-specific unit for totalizer 2. → See also TOT. 1 USER UNIT. **Prerequisite:** ▪ TOTALIZER 2 UNIT = User unit **Factory setting:** – – – – – – – –
FACT. U. U. TOTAL. 2 (330) Selection	Enter conversion factor for a customer-specific unit for totalizer 2. → See also FACT. U. U. TOTAL. 1. **Prerequisite:** ▪ TOTALIZER 2 UNIT = User unit **Factory setting:** 1.0
NEG. FLOW TOT. 2 (416) Selection	Specify way of counting negative flows for totalizer 2. → See NEG. FLOW TOT. 1. **Factory setting:** Positive

Table 21: (GROUP SELECTION →) OPERATING MENU → DISPLAY	
Parameter name	**Description**
MENU DESCRIPTOR (419) Selection	Specify contents for the main line of the on-site display in the measuring mode. → See also Operating Instructions BA00270P (Deltabar S), BA00271P (Cerabar S) or BA00332P (Deltapilot S), Section "On-site display". **Options:** ▪ Main measured value (PV) ▪ Main measured value (%) ▪ Pressure ▪ Flow ▪ Level ▪ Tank content ▪ Current ▪ Temperature ▪ Error number ▪ Totalizer 1 ▪ Totalizer 2 The selection depends on the measuring mode chosen. **Factory setting:** Main measured value (PV)

Table 21: (GROUP SELECTION →) OPERATING MENU → DISPLAY	
Parameter name	**Description**
MAIN DATA FORMAT (688) Selection	Specifies the number of places after the decimal point for the value displayed in the main line. → See also Operating Instructions BA00270P (Deltabar S), BA00271P (Cerabar S) or (BA00332P) Deltapilot S, Section "On-site display". **Options:** ▪ Auto ▪ x.x ▪ x.xx ▪ x.xxx ▪ x.xxxx ▪ x.xxxxx **Factory setting:** Auto
ALTERNATE DATA (423) Selection	Switch on "Alternating display" mode. In this display mode, the on-site display alternates between the following measured values depending on the measuring mode selected. – Pressure: Main measured value (PV), Pressure, Temperature and Current – Level Standard: Main measured value (PV), Pressure, Level, Tank content, Temperature and Current – Level Easy: Main measured value (PV), Pressure, Temperature and Current – Flow: Main measured value (PV), Pressure, Flow, Temperature, Current, Totalizer 1 and Totalizer 2 **Options:** ▪ Off ▪ On **Factory setting:** Off
DISPLAY CONTRAST (339) Entry	Adjust contrast of on-site display. You specify the contrast of the display with a number. Changes are only accepted as single steps, i.e. to change the value from "8" to "4", you need to save four times. You can also adjust the contrast of the display by means of the keys on the electronic insert or at the device. → See also Operating Instructions BA00270P (Deltabar S), BA00271P (Cerabar S) or BA00332P (Deltapilot S), Section "Function of operating keys". **Input range:** 4...13, 4: contrast weaker (brighter), 13: contrast stronger (darker). **Factory setting:** 8
DIGITS SETS (840) Display	This parameter is used to check the correct display of characters and digits on the user interface. If the characters and digits are displayed correctly, this parameter displays the string "0123456789.-".

Table 22: (GROUP SELECTION →) OPERATING MENU → OUTPUT	
Parameter name	**Description**
OUTPUT CURRENT (254) Display	Displays the current current value.

Table 22: (GROUP SELECTION →) OPERATING MENU → OUTPUT	
Parameter name	**Description**
CURR. CHARACT. (694), (695), (696), (764) Selection	Select curve of current output. **Options:** 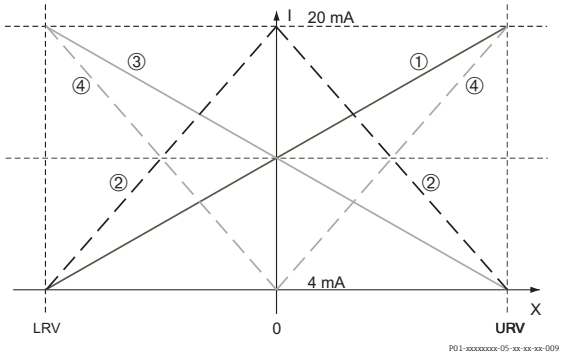 *Fig. 23: Illustration of current output curves* *1 Linear: lower range value = 4 mA, upper range value = 20 mA* *2 Bi-linear: lower range value = 4 mA, centre or zero = 20 mA, upper range value = 4 mA* *3 Linear inverse: lower range value = 20 mA, upper range value = 4 mA* *4 Bi-linear inverse: lower range value = 20 mA, centre or zero = 4 mA, upper range value = 20 mA* *LRV Lower range value* *URV Upper range value* *I Current* *X Measured value (Pressure/Level/Flow)* *The "CURR. CHARACT." function refers to the operating mode previously selected.* The 3-digit ID number on the on-site display depends on the MEASURING MODE selected: – (694): MEASURING MODE "Pressure" or MEASURING MODE "Flow" with the setting for LINEAR/SQROOT "Differential pres. – (695): MEASURING MODE "Flow" with the setting LINEAR/SQROOT "Flow (square root)" – (696): MEASURING MODE "Level", LEVEL MODE "Linear" or "Pressure Linearized" and LEVEL MODE "Height Linearized" with the setting for ASSIGN CURRENT "Level" – (764): MEASURING MODE "Level", LEVEL MODE "Height Linearized" with the setting for ASSIGN CURRENT "Tank content" **Factory setting:** Linear
OUTPUT FAIL MODE (388) Entry	Select the current value in the event of an alarm. In the event of an alarm, the current and the bargraph assume the current value specified with this parameter. **Options:** ▪ Max. alarm (110%): can be set between 21...23 mA ▪ Hold meas. value: last measured value is kept. ▪ Min. alarm (−10%): 3.6 mA → See also this table SET MAX. ALARM and Operating Instructions BA00270P (Deltabar S), BA00271P (Cerabar S) or BA00332P (Deltapilot S), Section "Setting current output for alarm". **Factory setting:** Max. alarm 110% (22 mA)

Table 22: (GROUP SELECTION →) OPERATING MENU → OUTPUT	
Parameter name	**Description**
ALT. CURR. OUTPUT (597) Selection	Set current output if sensor limits undershot or overshot. **Options:** ▪ Normal/NE43: the current output assumes the value set via the OUTPUT FAIL MODE and SET MAX. ALARM parameters. ▪ Special: – Lower sensor limit undershot (E120): Current output = 3.6 mA – Upper sensor limit overshot (E115): current output assumes the value set via the SET MAX. ALARM parameter. Attention : when using the case "special", the behavior is limited to an over/ underpressure in a range LRL -10%, URL +10%. **Factory setting:** Normal/NE43
SET MAX. ALARM (342) Entry	Enter current value for maximum alarm current. → See also OUTPUT FAIL MODE. **Input range:** 21...23 mA **Factory setting:** 22 mA
SET MIN. CURRENT (343) Entry	Enter lower current limit. Some switching units sometimes do not accept currents less than 4.0 mA. **Options:** ▪ 3.8 mA ▪ 4.0 mA **Factory setting:** 3.8 mA
ASSIGN CURRENT (760) Selection	Specify current signal for the "Level" measuring mode. See also SET LRV (→ Page 102) and SET URV (→ Page 102). **Prerequisite:** ▪ MEASURING MODE = Level, LEVEL MODE = Height Linearized **Options:** ▪ Height ▪ Tank content **Factory setting:** Tank content
LINEAR/SQROOT (390) Selection	Specify current signal for the "Flow" measuring mode. See also SET LRV (→ Page 103) and SET URV (→ Page 104). **Prerequisite:** ▪ MEASURING MODE = Flow or Pressure **Options:** ▪ Differential pres.: the linear pressure signal is used for the current output. ▪ Flow (square root): the root flow signal is used for the current output. The "Flow (square root)" current signal is indicated on the on-site display with a root symbol. **Factory setting:** Pressure

Table 23: (GROUP SELECTION →) OPERATING MENU → TRANSMITTER INFO → HART DATA	
Parameter name	**Description**
HART VERSION Display	Displays the HART Version.

Table 23: (GROUP SELECTION →) OPERATING MENU → TRANSMITTER INFO → HART DATA	
Parameter name	**Description**
CURRENT MODE (052) Selection	Set the current mode for HART communication. **Selection via on-site display and FieldCare:** ▪ Signaling Measured value transmission by the current value ▪ Fixed Fixed current 4.0 mA (multidrop mode) (Measured value transmission only via HART digital communication) **Factory setting:** Signaling **Selection via HART Handheld Terminal:** ▪ enabled Measured value transmission by the current value ▪ disabled Fixed current 4.0 mA (multidrop mode) (Measured value transmission only via HART digital communication) **Factory setting:** enabled
BUS ADDRESS (345) Entry	Enter the address for the exchange of data with the HART protocol. (HART 5.0: range 0 to 15, wherein if the address = 0 this produces the "Signaling" setting; HART 6.0/7.0: range 0 to 63) **Factory setting:** 0
DEVICE TYPE (351) Display	Displays the device type in decimal numerical format, here Deltabar S: 23 The extended device type is a composition of the manufacturer number (17) and the device type (23). **Prerequisite:** ▪ Deltabar S differential pressure transmitter
DEVICE TYPE (802) Display	Displays the device type in decimal numerical format, here Cerabar S: 24 The extended device type is a composition of the manufacturer number (17) and the device type (24). **Prerequisite:** ▪ Pressure transmitter Cerabar S
DEVICE TYPE (002) Display	Displays the device type in decimal numerical format, here Deltapilot S: 26 The extended device type is a composition of the manufacturer number (17) and the device type (26). **Prerequisite:** ▪ Pressure transmitter Deltapilot S
DEVICE NAME STR. Display	Displays the device name (16 alphanumeric characters). **Prerequisite:** ▪ Digital communication
DEVICE REVISION (699) Display	Displays the device revision
BURST MODE Selection	Switches "Burst Mode" function on and off. **Selection:** ▪ On ▪ Off **Prerequisite:** ▪ Digital communication
BURST OPTION Entry	Use this parameter to specify which command is sent to the master. **Prerequisite:** ▪ Digital communication **Factory setting:** 3 (HART commando 3)

Table 23: (GROUP SELECTION →) OPERATING MENU → TRANSMITTER INFO → HART DATA	
Parameter name	**Description**
PREAMBLE NUMBER (036) Entry	Enter the number of preambles in the HART protocol. (Synchronisation of the modem modules along a transmission path, each modem module could "swallow" a byte - at least 2 bytes must arrive.) **Input range:** 2...20 **Factory setting:** 5
MANUFACTOR ID (432) Display	Displays the manufacturer number in a decimal numerical format. Here: 17 Endress+Hauser
HART MESSAGE (271) Entry	Enter message (max. 32 alphanumeric characters). On command from the master, this message is sent via the HART protocol. **Factory setting:** _ or as per order specifications
HART DATE (481) Entry	Enter the date of the last configuration change. **Factory setting:** DD.MM.YY (date of final test)
HART PRIMARY VALUE IS Display	This parameter displays the following measured value depending on the measuring mode selected: – Measuring mode "Pressure": PRESSURE – "Level" measuring mode, "Linear" or "Pressure Linearized" level type: LEVEL BEFORE LIN – Measuring mode "Level", level type "Height Linearized": TANK CONTENT – Measuring mode "Flow": SUPPRESSED FLOW → See also PRIMARY VALUE. **Prerequisite:** ▪ Digital communication
PRIMARY VALUE Display	Displays the primary value. → See also HART PRIMARY VALUE IS. **Prerequisite:** ▪ Digital communication
SECONDARY VAL. IS	Select second process value. You can choose between the following process values depending on the measuring mode selected: – PRESSURE – CORRECTED PRESS. – SENSOR PRESSURE – SENSOR TEMP. – PCB TEMPERATURE – SUPPRESSED FLOW – TOTALIZER 1 – TOTALIZER 2 – LEVEL BEFORE LIN – TANK CONTENT **Prerequisite:** ▪ Digital communication
SECONDARY VALUE	Display second process value. → See also SECONDARY VAL. IS. **Prerequisite:** ▪ Digital communication
THIRD VALUE IS	Select third process value. → See also SECONDARY VAL. IS. **Prerequisite:** ▪ Digital communication
THIRD VALUE	Display third process value. → See also SECONDARY VAL. IS. **Prerequisite:** ▪ Digital communication

Table 23: (GROUP SELECTION →) OPERATING MENU → TRANSMITTER INFO → HART DATA	
Parameter name	**Description**
4TH VALUE IS	Select fourth process value. → See also SECONDARY VAL. IS. **Prerequisite:** ▪ Digital communication
4TH VALUE	Display fourth process value. → See also SECONDARY VAL. IS. **Prerequisite:** ▪ Digital communication

Table 24: (GROUP SELECTION →) OPERATING MENU → TRANSMITTER INFO → TRANSMITTER DATA	
Parameter name	**Description**
DEVICE SERIAL No (354) Display	Displays the serial number of the device (11 alphanumeric characters).
ELECTR. SERIAL No (386) Display	Displays the serial number of the main electronics (11 alphanumeric characters).
CUST. TAG NUMBER (055) Entry	Enter TAG number (max. 8 alphanumeric characters). **Factory setting:** _ _ _ _ _ _ _ _ or as per order specifications
LONG TAG NUMBER (305) Entry	Enter TAG number (max. 32 alphanumeric characters). **Factory setting:** _ or as per order specifications
ADDITIONAL INFO. (272) Entry	Enter tag description (max. 16 alphanumeric characters). **Factory setting:** _ _ _ _ _ _ _ _ _ _ _ _ _ _ _ _ _ or as per order specifications
DEVICE DESIGN. (350) Display	Displays the device designation and order code.
HARDWARE REV. (266) Display	Displays the revision number of the main electronics e.g.: V02.00.00
SOFTWARE VERSION (264) Display	Displays the software version e.g.: V02.10.00
CONFIG RECORDER (352) Display	Displays the configuration counter. This counter is increased by one with each change to a parameter or group. The counter counts to 65535 and then starts again at zero. Changes in the parameters of the DISPLAY function group do not increase the counter.
PCB TEMPERATURE (357) Display	Displays the measured temperature of the main electronics.
ALLOWED MIN. TEMP (358) Display	Displays the lower temperature limit of the main electronics.
ALLOWED MAX. TEMP (359) Display	Displays the upper temperature limit of the main electronics.

Table 24: (GROUP SELECTION →) OPERATING MENU → TRANSMITTER INFO → TRANSMITTER DATA	
Parameter name	**Description**
DIP STATUS (363) Display	Displays the status of DIP switch 1 on the electronic insert. You can lock or unlock parameters relevant to the measured value with DIP switch 1. If operation is locked by means of the INSERT PIN No. parameter, you can only unlock operation again by means of this parameter. (→ INSERT PIN NO, see Page 125.) → See also Operating Instructions BA00270P (Deltabar S), BA00271P (Cerabar S) or BA00332P (Deltapilot S), Section "Locking/unlocking operation". **Display:** ▪ On (locking switched on) ▪ Off (locking switched off) **Factory setting:** Off (locking switched off)

Table 25: (GROUP SELECTION →) OPERATING MENU → TRANSMITTER INFO → PROCESS CONNECTION	
Parameter name	**Description**
Pmax PROC. CONN. (570) Entry	For entering and displaying the maximum permitted pressure of the process connection. **Factory setting:** In accordance with nameplate data (→ see also Operating Instructions BA00270P (Deltabar S), BA00271P (Cerabar S) or BA00332P (Deltapilot S), Section nameplate)
PROC. CONN. TYPE (482) Selection	For selecting and displaying the process connection type. **Options:** ▪ Not used ▪ Unknown ▪ Special ▪ Oval flange ▪ Thread female ▪ Thread male ▪ Flange ▪ Remote seal
MAT. PROC. CONN. + (360) Selection	For selecting and displaying the material of the process connection (P+). → See also parameter description for MAT. PROC. CONN. - **Options:** ▪ Not used ▪ Unknown ▪ Special ▪ Steel ▪ 304 st. steel ▪ 316 st. steel ▪ Alloy C ▪ Monel ▪ Tantalum ▪ Titanium ▪ PTFE (Teflon) ▪ 316L st. steel ▪ PVC ▪ Inconel ▪ PVDF ▪ ECTFE **Factory setting:** As per order specifications
MAT. PROC. CONN. - (361) Selection	For selecting and displaying the material of the process connection (P−). → See also parameter description for MAT. PROC. CONN. + **Prerequisite:** ▪ Deltabar S differential pressure transmitter

Table 25: (GROUP SELECTION →) OPERATING MENU → TRANSMITTER INFO → PROCESS CONNECTION	
Parameter name	**Description**
SEAL TYPE (362) Selection	For selecting and displaying the material of the process seal. **Options:** ▪ Not used ▪ Unknown ▪ Special ▪ FKM Viton ▪ NBR ▪ EPDM ▪ Urethane ▪ IIR ▪ Kalrez ▪ FKM Viton oxyg ▪ CR ▪ MVQ ▪ PTFE glass ▪ PTFE graphite ▪ PTFE oxygen ▪ Copper ▪ Copper f. oxygen **Factory setting:** As per order specifications
BOLTS MATERIAL	For selecting and displaying the material of the bolts. **Prerequisite:** ▪ Digital communication
NUTS MATERIAL	For selecting and displaying the material of the nuts. **Prerequisite:** ▪ Digital communication
DRAIN VENT MAT.	For selecting and displaying the material of the vent valves. **Prerequisite:** ▪ Digital communication
DRAIN VENT POS.	For selecting and displaying the position of the vent valves. **Prerequisite:** ▪ Digital communication
THREAD	For selecting and displaying the process connection thread. **Prerequisite:** ▪ Digital communication
MOUNTING THREAD	For selecting and displaying the ways of securing the device. **Prerequisite:** ▪ Digital communication
REMOTE SEAL +	For selecting and displaying the diaphragm seal type on the positive side. **Prerequisite:** ▪ Digital communication
REMOTE SEAL −	For selecting and displaying the diaphragm seal type on the negative side. **Prerequisite:** ▪ Digital communication
DIAPHRAG. MAT. +	For selecting and displaying the material of the process isolating diaphragm on the positive side. **Prerequisite:** ▪ Digital communication
DIAPHRAG. MAT. −	For selecting and displaying the material of the process isolating diaphragm on the negative side. **Prerequisite:** ▪ Digital communication

Table 25: (GROUP SELECTION →) OPERATING MENU → TRANSMITTER INFO → PROCESS CONNECTION	
Parameter name	**Description**
NR OF REMOTE SEAL	For selecting and displaying the number of diaphragm seals. **Prerequisite:** ▪ Digital communication
FILL FLUID	For selecting and displaying the diaphragm seal fill fluid. **Prerequisite:** ▪ Digital communication

Table 26: (GROUP SELECTION →) OPERATING MENU → TRANSMITTER INFO → SENSOR DATA (all measuring modes)	
Parameter name	**Description**
SENSOR SER. No. (250) Display	Displays the serial number of the sensor (11 alphanumeric characters).
PRESS. SENS LOLIM (484) Display	Displays the lower measuring limit of the sensor.
PRESS. SENS HILIM (485) Display	Displays the upper measuring limit of the sensor.
MINIMUM SPAN (591) Display	Displays the smallest possible span.
SENSOR MEAS.TYPE (581) Display	Displays the sensor type. ▪ Deltabar S = differential ▪ Cerabar S with gauge pressure sensor = relative ▪ Cerabar S with absolute pressure sensor = absolute ▪ Deltapilot S = relative
Pmin SENS. DAMAGE (251) Display	Displays the minimum permissible absolute pressure of the sensor (vacuum-proofing).
Pmax SENS. DAMAGE (252) Display	Displays the maximum permissible absolute pressure of the sensor (overpressure-proofing).
MAT. MEMBRANE (365) Display	Displays the material of the process isolating diaphragm. **Factory setting:** As per version in the order code → For Deltabar S, see Technical Information TI00382P, for Cerabar S, see Technical Information TI00383P or for Deltapilot S, see Technical Information TI00416P, "Ordering information" section.
FILLING FLUID (366) Display	Displays the filling fluid.
Tmin SENSOR (368) Display	Displays the lower nominal temperature limit of the sensor.
Tmax SENSOR (369) Display	Displays the upper nominal temperature limit of the sensor.
SENS H/WARE REV (487) Display	Displays the revision number of the sensor hardware. e.g.: 1

Table 27: (GROUP SELECTION →) OPERATING MENU → PROCESSINFO → PROCESS VALUES "Pressure"	
Parameter name	**Description**
Prerequisite: ▪ MEASURING MODE = pressure	

Table 27: (GROUP SELECTION →) OPERATING MENU → PROCESSINFO → PROCESS VALUES "Pressure"	
Parameter name	**Description**
MEASURED VALUE (679)	Displays the measured value In the "Pressure" measuring mode, this value corresponds to the PRESSURE parameter. **Prerequisite:** ▪ Digital communication **On-site operation:** ▪ For on-site operation, the MEASURED VALUE parameter is displayed on the 1st level.
PRESSURE (301) Display	Displays the measured pressure after sensor recalibration, position adjustment and damping. This value corresponds to the MEASURED VALUE parameter in the "Pressure" measuring mode. 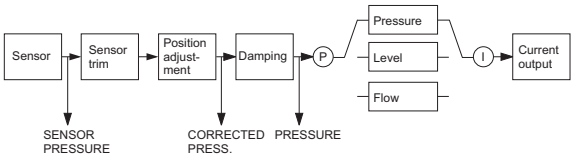 P01-xMx7xxxx-05-xx-xx-xx-009
CORRECTED PRESS. (434) Display	Displays the measured pressure after sensor trim and position adjustment and before damping. → See also PRESSURE diagram.
SENSOR PRESSURE (584) Display	Displays the measured pressure before sensor trim, position adjustment and damping. → See also PRESSURE diagram.
SENSOR TEMP. (367) Display	Displays the temperature currently measured in the sensor. This temperature can deviate from the process temperature.
MEAS. VAL. TREND (378) Display	Displays the trend of the pressure measured value. Possibilities: increasing, decreasing, constant

Table 28: (GROUP SELECTION →) OPERATING MENU → PROCESSINFO → PROCESS VALUES "Level"	
Parameter name	**Description**
Prerequisite: ▪ MEASURING MODE = Level	
MEASURED VALUE (679)	Displays the measured value In the "Level" measuring mode with "Linear" level type, this value corresponds to the LEVEL BEFORE LIN parameter In the "Level" measuring mode with "Height Linearized" or "Pressure Linearized" level type, this value corresponds to the TANK CONTENT parameter. **Prerequisite:** ▪ Digital communication **On-site operation:** ▪ For on-site operation, the MEASURED VALUE parameter is displayed on the 1st level.

Table 28: (GROUP SELECTION →) OPERATING MENU → PROCESSINFO → PROCESS VALUES "Level"	
Parameter name	**Description**
PRESSURE (301) Display	Displays the measured pressure after sensor recalibration, position adjustment and damping. This value corresponds to the MEASURED VALUE parameter in the "Pressure" measuring mode. 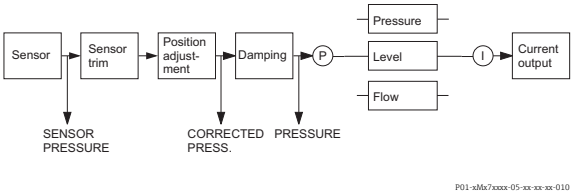
CORRECTED PRESS. (434) Display	Displays the measured pressure after sensor trim and position adjustment and before damping. → See also PRESSURE diagram.
SENSOR PRESSURE (584) Display	Displays the measured pressure before sensor trim, position adjustment and damping. → See also PRESSURE diagram.
SENSOR TEMP. (367) Display	Displays the temperature currently measured in the sensor. This temperature can deviate from the process temperature.
MEAS. VAL. TREND (378) Display	Displays the trend of the pressure measured value. Possibilities: increasing, decreasing, constant
LEVEL BEFORE LIN (050) Display	Displays the level value prior to linearisation. **Prerequisite:** ▪ LEVEL MODE = Linear or Height Linearized Depending on the setting for the LIN. MEASURAND or COMB. MEASURAND parameter, this parameter displays the current level in % or in a unit of level.
TANK CONTENT (370) Display	Displays the level value after linearisation. **Prerequisite:** ▪ LEVEL MODE = Pressure Linearized or Height Linearized Depending on the settings for the LINd. MEASURAND or COMB. MEASURAND parameter, the current tank content is displayed in % or in a unit of volume or mass. This value corresponds to the MEASURED VALUE.

Table 29: (GROUP SELECTION →) OPERATING MENU → PROCESSINFO → PROCESS VALUES "Flow"	
Parameter name	**Description**
Prerequisite: ▪ MEASURING MODE = Flow	
MEASURED VALUE (679)	Displays the measured value In the "Flow" measuring mode, this value corresponds to the SUPPRESSED FLOW parameter. **Prerequisite:** ▪ Digital communication **On-site operation:** ▪ For on-site operation, the MEASURED VALUE parameter is displayed on the 1st level.

Table 29: (GROUP SELECTION →) OPERATING MENU → PROCESSINFO → PROCESS VALUES "Flow"	
Parameter name	**Description**
PRESSURE (301) Display	Displays the measured pressure after sensor recalibration, position adjustment and damping. This value corresponds to the MEASURED VALUE parameter in the "Pressure" measuring mode. 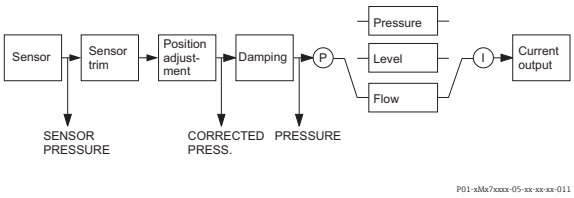
CORRECTED PRESS. (434) Display	Displays the measured pressure after sensor trim and position adjustment and before damping. → See also PRESSURE diagram.
SENSOR PRESSURE (584) Display	Displays the measured pressure before sensor trim, position adjustment and damping. → See also PRESSURE diagram.
SENSOR TEMP. (367) Display	Displays the temperature currently measured in the sensor. This temperature can deviate from the process temperature.
MEAS. VAL. TREND (378) Display	Displays the trend of the pressure measured value. Possibilities: increasing, decreasing, constant
SUPPRESSED FLOW (375) Display	Displays the current flow. Depending on the flow mode selected (→ FLOW-MEAS. TYPE), a volume flow, mass flow, standard volume flow or corrected volume flow is displayed.
TOTALIZER 1 (652) Display	Displays the total flow value of totalizer 1. You can reset the value with the RESET TOTALIZER 1 parameter. The TOTAL. 1 OVERFLOW parameter displays the overflow. **Example:** The value 123456789 m^3 is displayed as follows: – TOTALIZER 1: 3456789 m^3 – TOTAL. 1 OVERFLOW: 12 E7
TOTAL. 1 OVERFLOW (655) Display	Displays the overflow value of totalizer 1. → See also TOTALIZER 1.
TOTALIZER 2 (657) Display	Displays the total flow value of totalizer 2. You cannot reset totalizer 2. The TOTAL. 2 OVERFLOW parameter displays the overflow. → See also example for TOTALIZER 1.
TOTAL. 2 OVERFLOW (658) Display	Displays the overflow value of totalizer 2. → See also TOTALIZER 2 and example for TOTALIZER 1.

Table 30: (GROUP SELECTION →) OPERATING MENU → PROCESSINFO → PEAK HOLD INDICATOR	
Parameter name	**Description**
COUNTER:P > Pmax (380) Display	Displays the overpressure counter of the sensor The limit value is: upper nominal pressure limit of sensor + 10 % of upper nominal pressure limit of sensor. You can reset this counter by means of the RESET PEAKHOLD parameter.
MAX. MEAS. PRESS. (383) Display	Displays the largest measured pressure value (peak hold indicator). You can reset this indicator by means of the RESET PEAKHOLD parameter.
COUNTER P < Pmin (467) Display	Displays the vacuum pressure counter of the sensor The limit value is: lower nominal pressure limit of sensor – 10 % of upper nominal pressure limit of sensor. You can reset this counter by means of the RESET PEAKHOLD parameter.
MIN. MEAS. PRESS. (469) Display	Displays the smallest measured pressure value (peak hold indicator). You can reset this indicator by means of the RESET PEAKHOLD parameter.

Table 30: (GROUP SELECTION →) OPERATING MENU → PROCESSINFO → PEAK HOLD INDICATOR	
Parameter name	**Description**
COUNTER:T > Tmax (404) Display	Displays the number of times the specified temperature range of the sensor has been overshot. You can reset this counter by means of the RESET PEAKHOLD parameter.
MAX. MEAS. TEMP. (471) Display	Displays the largest measured temperature in the sensor (peak hold indicator). You can reset this indicator by means of the RESET PEAKHOLD parameter.
COUNTER:T < Tmin (472) Display	Displays the number of times the specified temperature range of the sensor has been undershot. You can reset this counter by means of the RESET PEAKHOLD parameter.
MIN. MEAS. TEMP. (474) Display	Displays the smallest measured temperature in the sensor (peak hold indicator). You can reset this indicator by means of the RESET PEAKHOLD parameter.
PCB COUNT:T > Tmax (488) Display	Displays the number of times the specified temperature range of the electronics has been overshot.
PCB MAX. TEMP. (490) Display	Displays the largest electronics temperature measured.
PCB COUNT:T < Tmin (492) Display	Displays the number of times the specified temperature range of the electronics has been undershot.
PCB MIN. TEMP. (494) Display	Displays the smallest electronics temperature measured.
RESET PEAKHOLD (382) Selection	This parameter lists all the peak hold indicator parameters that can be reset. You can select the peak hold indicators you want to reset. **Options:** ▪ None ▪ Max. pressure ▪ Min. pressure ▪ Pmax history ▪ Pmin history ▪ Max. temp. ▪ Min. temp. ▪ Tmax history ▪ Tmin history ▪ Reset all **Factory setting:** None

Table 31: (GROUP SELECTION →) OPERATING MENU → OPERATING	
Parameter name	**Description**
ENTER RESET CODE (047) Entry	Reset parameters completely or partially to factory values or delivery status. → See also Operating Instructions BA00270P (Deltabar S), BA00271P (Cerabar S) or BA00332P (Deltapilot S), Section "Factory setting" (reset). **Factory setting:** 0
OPERATING HOURS (409) Display	Displays the hours of operation. This parameter cannot be reset.

Table 31: (GROUP SELECTION →) OPERATING MENU → OPERATING	
Parameter name	**Description**
INSERT PIN NO (048) Entry	For entering a code to lock or unlock operation. ▪ The -symbol on the on-site display indicates that operation is locked. Parameters which refer to how the display appears, e.g. LANGUAGE and DISPLAY CONTRAST can still be altered. ▪ If operation is locked by means of the DIP-switch, you can only unlock operation again by means of the DIP-switch. If operation is locked by means of the on-site display or remote operation e.g. FieldCare, you can unlock operation again by means of the on-site display or using remote operation. → See also Operating Instructions BA00270P (Deltabar S), BA00271P (Cerabar S) or BA00332P (Deltapilot S), Section "Locking/unlocking operation". **Options:** ▪ Lock: enter a number between 0...9999 which is ≠100. ▪ Unlock: enter the number 100. **Factory setting:** 100
HistoROM AVAIL. (831) Display	Indicates whether the optional HistoROM®/M-DAT memory module is connected to the electronic insert. → See also Operating Instructions BA00270P (Deltabar S), BA00271P (Cerabar S) or BA00332P (Deltapilot S), Section "HistoROM®/M-DAT (optional)". **Options:** ▪ Yes (HistoROM®/M-DAT is attached to the electronic insert) ▪ No (HistoROM®/M-DAT is not attached to the electronic insert)
DOWNLOAD SELECT (014) Options	Select download function from HistoROM to device. The selection has no effect on an upload from the device to the HistoROM. **Prerequisite:** ▪ A HistoROM®/M-DAT is attached to the electronic insert (HistoROM AVAIL. = yes) **Options:** ▪ Configuration copy: For this option, all parameters apart from the DEVICE SERIAL No, DEVICE DESIGN., CUST. TAG NUMBER, LONG TAG NUMBER, ADDITIONAL INFO., BUS ADDRESS, CURRENT MODE and the parameters of the POSITION ADJUSTMENT and PROCESS CONNECTION group are overwritten. ▪ Device replacement: With this option, all parameters except for DEVICE SERIAL No, DEVICE DESIGN. and the parameters of the POSITION ADJUSTMENT and PROCESS CONNECTION group are overwritten. ▪ Electronics replace: With this option, all parameters except for the parameters of the POSITION ADJUSTMENT group are overwritten. **Factory setting:** Copy config. (if HistoROM®/M-DAT is attached to the electronic insert)
HistoROM CONTROL (832) Selection	For selecting the direction for copying the data. → See also Operating Instructions BA00270P (Deltabar S), BA00271P (Cerabar S) or BA00332P (Deltapilot S), Section "HistoROM®/M-DAT (optional)". **Prerequisite:** ▪ A HistoROM®/M-DAT is attached to the electronic insert (HistoROM AVAIL. = yes) **Options:** ▪ Abort ▪ HistoROM → Device ▪ Device → HistoROM **Factory setting:** Abort (if HistoROM®/M-DAT is connected to the electronic insert)

Table 32: (GROUP SELECTION →) OPERATING MENU → DIAGNOSTICS → SIMULATION	
Parameter name	**Description**
SIMULATION MODE (413) Selection	Switch on simulation and select simulation type. Any simulation running is switched off if the measuring mode or level type is changed. **Options**: ▪ None ▪ Pressure, → see also this table parameter description for SIM. PRESSURE ▪ Flow (only differential pressure transmitter), → see also this table parameter description for SIM. FLOW VALUE ▪ Level, → see also this table parameter description for SIM. LEVEL ▪ Tank content, → see also this table parameter description for SIM. TANK CONT. ▪ Current, → see also this table parameter description for SIM. CURRENT Note: "Square root" has to be selected in the LINEAR/SQROOT parameter to ensure the current output corresponds to the simulated flow value. ▪ Alarm/warning, , → see also this table parameter description for SIM. ERROR NO. 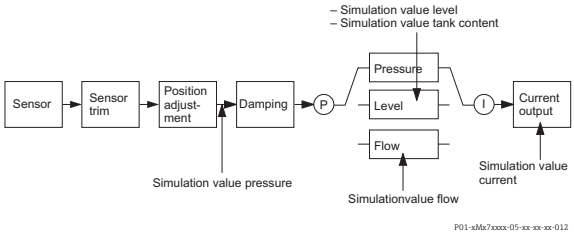 **Factory setting:** None
SIM. PRESSURE (414) Entry	Enter simulation value. → See also SIMULATION MODE. **Prerequisite:** ▪ SIMULATION MODE = Pressure **Factory setting:** Current pressure measured value
SIM. FLOW VALUE (639) Entry	Enter simulation value. → See also SIMULATION MODE. **Prerequisite:** ▪ MEASURING MODE = Flow and SIMULATION MODE = Flow
SIM. LEVEL (714) Entry	Enter simulation value. → See also SIMULATION MODE. **Prerequisite:** ▪ MEASURING MODE = Level and SIMULATION MODE = Level
SIM. TANK CONT. (715) Entry	Enter simulation value. → See also SIMULATION MODE. **Prerequisites:** ▪ MEASURING MODE = Level, LEVEL MODE = Pressure Linearized and SIMULATION MODE = Tank content ▪ MEASURING MODE = Level, LEVEL MODE = Height Linearized and SIMULATION MODE = Tank content
SIM. CURRENT (270) Entry	Enter simulation value. → See also SIMULATION MODE. **Prerequisite:** ▪ SIMULATION MODE = Current value **Factory setting:** Current current value

Table 32: (GROUP SELECTION →) OPERATING MENU → DIAGNOSTICS → SIMULATION	
Parameter name	**Description**
SIM. ERROR NO. (476) Entry	**⚠ CAUTION** **Note Dependencies when setting parameters!** ▶ The SIMULATION parameter overwrites fault states (alarm/warning) that are actually present. When the simulation is ended, the fault states (alarm/warning) still persist but are no longer displayed! When the device is restarted it returns to its fault state. Enter message number. → See also SIMULATION MODE. → See also these Operating Instructions, Section 10.1 "Messages", "Code" table column. **Prerequisite:** ▪ SIMULATION MODE = Alarm/Warning **Factory setting:** 613 (simulation active)

Table 33: (GROUP SELECTION →) OPERATING MENU → DIAGNOSTICS → MESSAGES	
Parameter name	**Description**
ALARM STATUS (046) Display	Displays the current messages present. → See also these Operating Instructions, Section 10.1. "Messages" and Section 10.3 "Confirming messages". **On-site display** ▪ The measured value display shows the message with the highest priority. ▪ The ALARM STATUS parameter shows all the messages in descending order of priority. You can scroll through all the messages present with the ⊞ or ⊟ key. **Operating program** ▪ The "Status" field and the ALARM STATUS parameter show the message with the highest priority.
LAST DIAG. CODE (564) Display	Displays the last messages that occurred and were eliminated. ▪ On-site display: you can scroll through the last 15 messages with the ⊞ or ⊟ key. ▪ Digital communication: the last message appears on the display. ▪ Use the RESET ALL ALARMS parameter to delete the messages listed in the LAST DIAG. CODE parameter.
ACK. ALARM MODE (401) Selection	Switch on acknowledge alarm mode. → See also ACK. ALARM. **Options:** ▪ On ▪ Off **Factory setting:** Off
ACK. ALARM (500) Selection	Acknowledge alarm. **Prerequisite:** ▪ ACK. ALARM MODE = on **Options:** ▪ Abort ▪ Confirm The cause of the alarm must be eliminated, the message must be acknowledged via the ACK. ALARM parameter and, where applicable, the ALARM DISPL. TIME (→ Page 128) has to have elapsed before the device starts measuring again following an alarm. → See also these Operating Instructions, Section 10.3 "Confirming messages". **Factory setting:** Abort

Table 33: (GROUP SELECTION →) OPERATING MENU → DIAGNOSTICS → MESSAGES	
Parameter name	**Description**
RESET ALL ALARMS (603) Selection	Use this parameter to reset all the messages of the LAST DIAG. CODE parameter. **Options:** ▪ Abort ▪ Confirm **Factory setting:** Abort
ERROR No. Entry	For "Error"-type messages, you can decide whether the device should behave as in the event of an alarm (A) or as in the event of a warning (W). Enter the corresponding message number for this parameter. → See also SELECT ALARMTYPE. → See also these Operating Instructions, Section 10.1 "Messages" and Section 10.2 "Response of outputs to errors". **Prerequisite:** ▪ Digital communication
SELECT ALARMTYPE (595) – Entry (600) – Selection	For "Error"-type messages, you can decide whether the device should behave as in the event of an alarm (A) or as in the event of a warning (W). → See also ERROR No. → See also these Operating Instructions, Section 10.2 "Response of outputs to errors". **Options**: ▪ Alarm (A): output current assumes a defined value. ▪ Warning (W): device continues measuring **On-site operation:** 1. Enter the corresponding message number for ERROR No. field. 2. Select "Alarm" or "Warning" option. **Digital communication:** 1. Enter the corresponding message number via the ERROR No. parameter. 2. Use the SELECT ALARMTYPE parameter to select the "Alarm" or "Warning" option.
ALARM DELAY (336) Entry	Enter alarm response time for all "Error" messages. There is no alarm if the cause of the error is eliminated within the alarm delay time. **Input range:** 0...100 s **Factory setting:** 0.0 s
ALARM DISPL. TIME (480) Entry	Enter alarm display time for all "Error" messages. Once the cause of the error is rectified, the alarm display time starts running. The following applies if the setting for ACK. ALARM MODE = on: If an alarm appears and the alarm display time elapses before the alarm has been acknowledged, the message will be cleared once it has been acknowledged. → See also these Operating Instructions, Section 10.3 "Confirming messages". **Input range:** 0...999.9 s **Factory setting:** 0.0 s

Table 34: (GROUP SELECTION →) OPERATING MENU → DIAGNOSTICS → USER LIMITS	
Parameter name	**Description**
Pmin ALARM WINDOW (332) Entry	Customer-specific process monitoring – enter lower pressure limit. You can use the SELECT ALARMTYPE parameter to enter how the device responds if the operating pressure undershoots the specified value. → See also these Operating Instructions, Section 10.1 "Messages", table, Code E730 and Section 10.2 "Response of outputs to errors". **Factory setting:** Low sensor limit ▪ 1.1 (→ For the low sensor limit, see PRESS. SENS LOLIM.)
Pmax ALARM WINDOW (333) Entry	Customer-specific process monitoring – enter upper pressure limit. You can use the SELECT ALARMTYPE parameter to enter how the device responds if the operating pressure exceeds the specified value. → See also these Operating Instructions, Section 10.1 "Messages", table, Code E731 and Section 10.2 "Response of outputs to errors". **Factory setting:** High sensor limit ▪ 1.1 (→ For the high sensor limit, see PRESS. SENS HILIM.)
Tmin ALARM WINDOW (334) Entry	Customer-specific process monitoring – enter lower temperature limit. You can use the SELECT ALARMTYPE parameter to enter how the device responds if the sensor temperature undershoots the specified value. → See also these Operating Instructions, Section 10.1 "Messages", table, Code E732 and Section 10.2 "Response of outputs to errors". **Factory setting:** Lower sensor temperature application limit – 10 K (→ For the lower temperature application limit, see Tmin SENSOR)
Tmax ALARM WINDOW (335) Entry	Customer-specific process monitoring – enter upper temperature limit. You can use the SELECT ALARMTYPE parameter to enter how the device responds if the sensor temperature exceeds the specified value. → See also these Operating Instructions, Section 10.1 "Messages", table, Code E733 and Section 10.2 "Response of outputs to errors". **Factory setting:** Upper sensor temperature application limit +10 K (→ For the upper temperature application limit, see Tmax SENSOR)

Table 35: (GROUP SELECTION →) OPERATING MENU → SERVICE → SYSTEM 2	
Parametername	**Beschreibung**
CURR. TRIM 4mA (045) Entry	Enter current value for the lower point (4 mA) of the current output trim line. You can adapt the current output to the transmission conditions with this parameter and CURR. TRIM 20mA. Perform current trim for the lower point as follows: 1. Select SIMULATION group. (Menu path: (GROUP SELECTION) → OPERATING MENU → DIAGNOSTICS → SIMULATION) 2. Select option "Current" via SIMULATION parameter. 3. Enter "4 mA" for SIM. CURRENT parameter. 4. Select SYSTEM 2 group. (Menu path: (GROUP SELECTION) → OPERATING MENU → SERVICE) 5. Enter the current value measured with the switching unit for the CURR. TRIM 4mA parameter. **Input range:** Measured current (3.8 mA to 4.2 mA) **Factory setting:** 4 mA

Table 35: (GROUP SELECTION →) OPERATING MENU → SERVICE → SYSTEM 2	
Parametername	**Beschreibung**
CURR. TRIM 20mA (042) Entry	Enter current value for the upper point (20 mA) of the current output trim line. You can adapt the current output to the transmission conditions with this parameter and CURR. TRIM 4mA. Perform current trim for the upper point as follows: 1. Select SIMULATION group. (Menu path: (GROUP SELECTION) → OPERATING MENU → DIAGNOSTICS → SIMULATION) 2. Select option "Current" via SIMULATION parameter. 3. Enter "20 mA" for SIM. CURRENT parameter. 4. Select SYSTEM 2 group. (Menu path: (GROUP SELECTION) → OPERATING MENU → SERVICE) 5. Enter the current value measured with the switching unit for the CURR. TRIM 20mA parameter. **Input range:** Measured current (19 mA to 21 mA) **Factory setting:** 20 mA
OFFSET 4mA TRIM (043) Display	Displays the difference between 4 mA and the value entered for the CURRENT TRIM 4mA parameter. **Factory setting:** 0
OFFSET 20mA TRIM (044) Display	Displays the difference between 20 mA and the value entered for the CURRENT TRIM 20mA parameter. **Factory setting:** 0

10 Troubleshooting

10.1 Messages

The following table lists all the possible messages that can occur.
The device differentiates between the error types "Alarm", "Warning" and "Error". You may specify whether the instrument should react as if for an "Alarm" or "Warning" for "Error" messages.
→ See "Error type/NA 64" column and parameter descriptions for ERROR No. and SELECT ALARMTYPE (→ Page 128).

In addition, the "Error type/NA 64" column classifies the messages in accordance with NAMUR Recommendation NA 64:
- Break down: indicated with "B"
- Maintenance need: indicated with "C" (check request)
- Function check: indicated with "T" (in service)

Error message display on the on-site display:
- The measured value display shows the message with the highest priority. → See "Priority" column.
- The ALARM STATUS (→ Page 127) parameter shows all the messages present in descending order of priority. You can scroll through all the messages present with the ⊞ key or ⊟ key.

Message display via the digital communication:
- The ALARM STATUS (→ Page 127) parameter shows the message with the highest priority. → See "Priority" column.
- If the device detects a defect in the on-site display during initialization, special error messages are generated. → For the error messages, see Page 140, Section 10.1.1 "On-site display error messages".
- For support and further information, please contact Endress+Hauser Service.

Code	Error type/ NA 64	Corresponds NE 107	Message/description	Cause	Measure	Priority
101 (A101)	Alarm B	Failure (F)	B>Sensor electronic EEPROM error	– Electromagnetic effects are greater than specifications in the technical data. → See Technical Information TI00382P (Deltabar S), TI00383P (Cerabar S) or TI00416P (Deltapilot S). This message normally only appears briefly. – Sensor defect.	– Wait a few minutes. – Restart the device. Perform reset (Code 62). – Block off electromagnetic effects or eliminate source of disturbance. – Replace sensor.	17
102 (W102)	Warning C	Maintenance request (M)	C>Checksum error in EEPROM: peakhold segment	– Main electronics defect. Correct measurement can continue as long as you do not need the peak hold indicator function.	– Replace main electronics.	53
106 (W106)	Warning C	Funktion check (C)	C>Downloading - please wait	– Downloading.	– Wait for download to complete.	52

Code	Error type/ NA 64	Corresponds NE 107	Message/description	Cause	Measure	Priority
110 (A110)	Alarm B	Failure (F)	B>Checksum error in EEPROM: configuration segment	– The supply voltage is disconnected when writing. – Electromagnetic effects are greater than specifications in the technical data. → See Technical Information TI00382P (Deltabar S), TI00383P (Cerabar S) or TI00416P (Deltapilot S). – Main electronics defect.	– Reestablish supply voltage. Perform reset (Code 7864) if necessary. Carry out calibration again. – Block off electromagnetic effects or eliminate sources of disturbance. – Replace main electronics.	6
113 (A113)	Alarm B	Failure (F)	B>ROM failure in transmitter electronic	– Main electronics defect.	– Replace main electronics.	1
115 (E115)	Error B factory setting: Warning C	Out of specification (S)	B>Sensor overpressure	– Overpressure present. – Sensor defect.	– Reduce pressure until message disappears. – Replace sensor.	29
116 (W116)	Warning C	Maintenance request (M)	C>Download error, repeat download	– The file is defect. – During the download, the data are not correctly transmitted to the processor, e.g. because of open cable connections, spikes (ripple) on the supply voltage or electromagnetic effects.	– Use another file. – Check cable connection PC – transmitter. – Block off electromagnetic effects or eliminate sources of disturbance. – Perform reset (Code 7864) and carry out calibration again. – Repeat download.	36
120 (E120)	Error B factory setting: Warning C	Out of specification (S)	B>Sensor low pressure	– Pressure too low. – Sensor defect.	– Increase pressure until message disappears. – Replace sensor.	30
121 (A121)	Alarm B	Failure (F)	B>Checksum error in factory segment of EEPROM	– Main electronics defect.	– Replace main electronics.	5
122 (A122)	Alarm B	Failure (F)	B>Sensor not connected	– Cable connection sensor –main electronics disconnected. – Electromagnetic effects are greater than specifications in the technical data. → See Technical Information TI00382P (Deltabar S), TI00383P (Cerabar S) or TI00416P (Deltapilot S). – Main electronics defect. – Sensor defect.	– Check cable connection and repair if necessary. – Block off electromagnetic effects or eliminate source of disturbance. – Replace main electronics. – Replace sensor.	13
130 (A130)	Alarm B	Failure (F)	B>EEPROM is defect.	– Main electronics defect.	– Replace main electronics.	10
131 (A131)	Alarm B	Failure (F)	B>Checksum error in EEPROM: min/max segment	– Main electronics defect.	– Replace main electronics.	9
132 (A132)	Alarm B	Failure (F)	B>Checksum error in totalizer EEPROM	– Main electronics defect.	– Replace main electronics.	7

Code	Error type/ NA 64	Corresponds NE 107	Message/description	Cause	Measure	Priority
133 (A133)	Alarm B	Failure (F)	B>Checksum error in History EEPROM	– An error occurred when writing. – Main electronics defect.	– Perform reset (Code 7864) and carry out calibration again. – Replace electronics.	8
602 (W602)	Warning C	Funktion check (C)	C>Linearisation curve not monotone	– The linearisation table is not monotonic increasing or decreasing.	– Add to linearisation table or perform linearisation again.	57
604 (W604)	Warning C	Funktion check (C)	C>Linearisation table not valid. Less than 2 points or points too close	From software version "02.10.xx" onwards, there is no min. span for the Y-points.		
				– The linearisation table consists of less than 2 points. – At least 2 points in the linearisation table are too close together. A minimum gap of 0.5 % of the distance between two points must be maintained. Spans for the "Pressure linearized" option: HYDR. PRESS MAX. – HYDR. PRESS MIN.; TANK CONTENT MAX. – TANK CONTENT MIN. Spans for the "Height linearized" option: LEVEL MAX – LEVEL MIN; TANK CONTENT MAX. – TANK CONTENT MIN.	– Add to linearisation table. If necessary, perform linearisation again. – Correct linearisation table and accept again.	58
613 (W613)	Warning I	Funktion check (C)	I>Simulation is active	– Simulation is switched on, i.e. the device is not measuring at present.	– Switch off simulation.	60
620 (E620)	Error C Factory setting: Warning C	Out of specification (S)	C>Current output out of range	The current is outside the permitted range 3.8 to 20.5 mA. – The pressure applied is outside the set measuring range (but within the sensor range). – Loose connection at sensor cable	– Check pressure applied, reconfigure measuring range if necessary (→ See also these Operating Instructions, chapter 4 to 6.) – Perform reset (Code 7864) and carry out calibration again. – Wait a short period of time and tighten the connection, or avoid loose connection.	49
700 (W700)	Warning C	Maintenance request (M)	C>Last configuration not stored	– An error occurred when writing or reading configuration data or the power supply was disconnected. – Main electronics defect.	– Perform reset (Code 7864) and carry out calibration again. – Replace main electronics.	54
701 (W701)	Warning C	Funktion check (C)	C>Measuring chain config. exceeds sensor range	– The calibration carried out would result in the sensor nominal operating range being undershot or overshot.	– Carry out calibration again.	50

Code	Error type/ NA 64	Corresponds NE 107	Message/description	Cause	Measure	Priority
702 (W702)	Warning C	Maintenance request (M)	C>HistoROM data not consistent.	– Data were not written correctly to the HistoROM, e.g. if the HistoROM was detached during the writing process. – HistoROM does not have any data.	– Repeat upload. – Perform reset (Code 7864) and carry out calibration again. – Copy suitable data to the HistoROM. (→ See also Operating Instructions BA00270P (Deltabar S), BA00271P (Cerabar S) or BA00332P (Deltapilot S), Section "Copying configuration data".)	55
703 (A703)	Alarm B	Failure (F)	B>Measurement error	– Fault in the main electronics. – Main electronics defect.	– Briefly disconnect device from the power supply. – Replace main electronics.	22
704 (A704)	Alarm B	Funktion check (C)	B>Measurement error	– Fault in the main electronics. – Main electronics defect.	– Briefly disconnect device from the power supply. – Replace main electronics.	12
705 (A705)	Alarm B	Failure (F)	B>Measurement error	– Fault in the main electronics. – Main electronics defect.	– Briefly disconnect device from the power supply. – Replace main electronics.	21
706 (W706)	Warning C	Maintenance request (M)	C>Configuration in HistoROM and device not identical	– Configuration (parameters) in the HistoROM and in the device is not identical.	– Copy data from the device to the HistoROM. – Copy data from the HistoROM to the device. The message remains if the HistoROM and the device have different software versions. The message goes out if you copy the data from the device to the HistoROM. – Device reset codes such as 7864 do not have any effect on the HistoROM. That means that if you do a reset, the configurations in the HistoROM and in the device may not be the same. → See also Operating Instructions BA00270P (Deltabar S), BA00271P (Cerabar S), BA00332P (Deltapilot S) Section "Copying configuration data".	59
707 (A707)	Alarm B	Funktion check (C)	B>X-VAL. of lin. table out of edit limits.	– At least one X-VALUE in the linearisation table is either below the value for HYDR. PRESS MIN. or MIN. LEVEL or above the value for HYDR. PRESS. MAX. or LEVEL MAX.	– Carry out calibration again. (→ See also these Operating Instructions, chapter 5.)	38
710 (W710)	Warning C	Funktion check (C)	B>Set span too small. Not allowed.	– Values for calibration (e.g. lower range value and upper range value) are too close together. – The sensor was replaced and the customer-specific configuration does not suit the sensor. – Unsuitable download carried out.	– Adjust calibration to suit sensor. (→ See also Page 120, parameter description MINIMUM SPAN.) – Adjust calibration to suit sensor. – Replace sensor with a suitable sensor. – Check configuration and perform download again.	51

Code	Error type/ NA 64	Corresponds NE 107	Message/description	Cause	Measure	Priority
711 (A711)	Alarm B	Funktion check (C)	B>LRV or URV out of edit limits	– Lower range value and/or upper range value undershoot or overshoot the sensor range limits. – The sensor was replaced and the customer-specific configuration does not suit the sensor. – Unsuitable download carried out.	– Reconfigure lower range value and/or upper range value to suit the sensor. Pay attention to position factor. – Reconfigure lower range value and/or upper range value to suit the sensor. Pay attention to position factor. – Replace sensor with a suitable sensor. – Check configuration and perform download again.	37
713 (A713)	Alarm B	Funktion check (C)	B>100% POINT level out of edit limits	– The sensor was replaced.	– Carry out calibration again.	39
715 (E715)	Error C Factory setting: Warning C	Out of specification (S)	C>Sensor over temperature	– The temperature measured in the sensor is greater than the upper nominal temperature of the sensor. (→ See also Page 120, parameter description Tmax SENSOR.) – Unsuitable download carried out.	– Reduce process temperature/ ambient temperature. – Check configuration and perform download again.	32
716 (E716)	Error B Factory setting: Alarm B	Failure (F)	B>Process isolating diaphragm broken	– Sensor defect.	– Replace sensor. – Reduce pressure.	24
717 (E717)	Error C Factory setting: Warning C	Out of specification (S)	C>Transmitter over temperature	– The temperature measured in the electronics is greater than the upper nominal temperature of the electronics (+88 °C). – Unsuitable download carried out.	– Reduce ambient temperature. – Check configuration and perform download again.	34
718 (E718)	Error C Factory setting: Warning C	Out of specification (S)	C>Transmitter under temperature	– The temperature measured in the electronics is smaller than the lower nominal temperature of the electronics (−43 °C). – Unsuitable download carried out.	– Increase ambient temperature. Insulate device if necessary. – Check configuration and perform download again.	35
719 (A719)	Alarm B	Funktion check (C)	B>Y-VAL of lin. table out of edit limits	– At least on Y-VALUE in the linearisation table is below the MIN. TANK CONTANT or above the MAX. TANK CONTENT.	– Carry out calibration again.	40

Code	Error type/ NA 64	Corresponds NE 107	Message/description	Cause	Measure	Priority
720 (E720)	Error C Factory setting: Warning C	Out of specification (S)	C>Sensor under temperature	– The temperature measured in the sensor is smaller than the lower nominal temperature of the sensor. (→ See also Page 120, parameter description Tmin SENSOR.) – Unsuitable download carried out. – Loose connection at sensor cable	– Increase process temperature/ ambient temperature. – Check configuration and perform download again. – Wait a short period of time and tighten the connection, or avoid loose connection.	33
721 (A721)	Alarm B	Funktion check (C)	B>ZERO POSITION level out of edit limits	– LEVEL MIN or LEVEL MAX has been changed.	– Perform reset (Code 2710) and carry out calibration again.	41
722 (A722)	Alarm B	Funktion check (C)	B>EMPTY CALIB. or FULL CALIB. out of edit limits	– LEVEL MIN or LEVEL MAX has been changed.	– Perform reset (Code 2710) and carry out calibration again.	42
723 (A723)	Alarm B	Funktion check (C)	B>MAX. FLOW out of edit limits	– FLOW-MEAS. TYPE has been changed.	– Carry out calibration again.	43
725 (A725)	Alarm B	Failure (F)	B>Sensor connection error, cycle disturbance	– Electromagnetic effects are greater than specifications in the technical data. → See Technical Information TI00382P (Deltabar S), TI00383P (Cerabar S) or TI00416P (Deltapilot S). – Setscrew loose. – Sensor or main electronics defect.	– Block off electromagnetic effects or eliminate source of disturbance. – Retighten setscrew with 1 Nm (0,74 lbf ft) (see chapter "Rotating the housing" in BA00270P (Deltabar S), BA00271P (Cerabar S), BA00332P (Deltapilot S). – Replace sensor or main electronics.	25
726 (E726)	Error C Factory setting: ▪ Deltapilot: Warning C ▪ Deltabar/ Cerabar: Alarm C	Out of specification (S)	C>Sensor temperature error - overrange	– Electromagnetic effects are greater than specifications in the technical data. → See Technical Information TI00382P (Deltabar S), TI00383P (Cerabar S) or TI00416P (Deltapilot S). – Process temperature is outside permitted range. – Sensor defect.	– Block off electromagnetic effects or eliminate source of disturbance. – Check temperature present, reduce or increase if necessary. – If the process temperature is within the permitted range, replace sensor.	31

Code	Error type/ NA 64	Corresponds NE 107	Message/description	Cause	Measure	Priority
727 (E727)	Error C Factory setting: Warning C	Out of specification (S)	C>Sensor pressure error - overrange	– Electromagnetic effects are greater than specifications in the technical data. → See Technical Information TI00382P (Deltabar S), TI00383P (Cerabar S) or TI00416P (Deltapilot S). – Pressure is outside permitted range. – Sensor defect.	– Block off electromagnetic effects or eliminate source of disturbance. – Check pressure present, reduce or increase if necessary. – If the pressure is within the permitted range, replace sensor.	28
728 (A728)	Alarm B	Failure (F)	B>RAM error	– Fault in the main electronics. – Main electronics defect.	– Briefly disconnect device from the power supply. – Replace main electronics.	2
729 (A729)	Alarm B	Failure (F)	B>RAM error	– Fault in the main electronics. – Main electronics defect.	– Briefly disconnect device from the power supply. – Replace main electronics.	3
730 (E730)	Error C Factory setting: Warning C	Out of specification (S)	C>LRV user limits exceeded	– Pressure measured value has undershot the value specified for the Pmin ALARM WINDOW parameter. – Loose connection at sensor cable	– Check system/pressure measured value. – Change value for Pmin ALARM WINDOW if necessary. (→ See also Page 129, parameter description Pmin ALARM WINDOW.) – Wait a short period of time and tighten the connection, or avoid loose connection.	46
731 (E731)	Error C Factory setting: Warning C	Out of specification (S)	C>URV user limits exceeded	– Pressure measured value has overshot the value specified for the Pmax ALARM WINDOW parameter. – Loose connection at sensor cable	– Check system/pressure measured value. – Change value for Pmax ALARM WINDOW if necessary. (→ See also Page 129, parameter description Pmax ALARM WINDOW.) – Wait a short period of time and tighten the connection, or avoid loose connection.	45
732 (E732)	Error C Factory setting: Warning C	Out of specification (S)	C>LRV Temp. User limits exceeded	– Temperature measured value has undershot the value specified for the Tmin ALARM WINDOW parameter.	– Check system/temperature measured value. – Change value for Tmin ALARM WINDOW if necessary. (→ See also Page 129, parameter description Tmin ALARM WINDOW.)	48
733 (E733)	Error C Factory setting: Warning C	Out of specification (S)	C>URV Temp. User limits exceeded	– Temperature measured value has overshot the value specified for the Tmax ALARM WINDOW parameter.	– Check system/temperature measured value. – Change value for Tmax ALARM WINDOW if necessary. (→ See also Page 129, parameter description Tmax ALARM WINDOW.)	47
736 (A736)	Alarm B	Failure (F)	B>RAM error	– Fault in the main electronics. – Main electronics defect.	– Briefly disconnect device from the power supply. – Replace main electronics.	4
737 (A737)	Alarm B	Failure (F)	B>Measurement error	– Fault in the main electronics. – Main electronics defect.	– Briefly disconnect device from the power supply. – Replace main electronics.	20

Code	Error type/ NA 64	Corresponds NE 107	Message/description	Cause	Measure	Priority
738 (A738)	Alarm B	Failure (F)	B>Measurement error	– Fault in the main electronics. – Main electronics defect.	– Briefly disconnect device from the power supply. – Replace main electronics.	19
739 (A739)	Alarm B	Failure (F)	B>Measurement error	– Fault in the main electronics. – Main electronics defect.	– Briefly disconnect device from the power supply. – Replace main electronics.	23
740 (E740)	Error C Factory setting: Warning C	Maintenance request (M)	C>Calculation overflow, bad configuration	– Level measuring mode: the measured pressure has undershot the value for HYDR. PRESS. MIN. or overshot the value for HYDR. PRESS MAX. – Level measuring mode: The measured level did not reach the LEVEL MIN value or exceeded the LEVEL MAX value. – Flow measuring mode: the measured pressure has undershot the value for MAX. PRESS FLOW.	– Check configuration and carry out calibration again if necessary. – Select a device with a suitable measuring range. – Check configuration and carry out calibration again if necessary. (→ See also parameter description LEVEL MIN., Page 93.) – Check configuration and carry out calibration again if necessary. – Select a device with a suitable measuring range.	27
741 (A741)	Alarm B	Funktion check (C)	B>TANK HEIGHT out of edit limits	– LEVEL MIN or LEVEL MAX has been changed.	– Perform reset (Code 2710) and carry out calibration again.	44
742 (A742)	Alarm B	Failure (F)	B>Sensor connection error (upload)	– Electromagnetic effects are greater than specifications in the technical data. → See Technical Information TI00382P (Deltabar S), TI00383P (Cerabar S) or TI00416P (Deltapilot S). This message normally only appears briefly. – Cable connection sensor – main electronics disconnected. – Sensor defect.	– Wait a few minutes. – Perform reset (Code 7864) and carry out calibration again. – Check cable connection and repair if necessary. – Replace sensor.	18
743 (E743)	Alarm B	Failure (F)	B>Electronic PCB error during initialisation	– This message normally only appears briefly. – Main electronics defect.	– Wait a few minutes. – Restart the device. Perform reset (Code 62). – Replace main electronics.	14
744 (A744)	Alarm B	Failure (F)	B>Main electronic PCB error	– Electromagnetic effects are greater than specifications in the technical data. → See Technical Information TI00382P (Deltabar S), TI00383P (Cerabar S) or TI00416P (Deltapilot S). – Main electronics defect.	– Restart the device. Perform reset (Code 62). – Block off electromagnetic effects or eliminate source of disturbance. – Replace main electronics.	11
745 (W745)	Warning C	Maintenance request (M)	C>Sensor data unknown	– Sensor does not suit the device (electronic sensor nameplate). Device continues measuring.	– Replace sensor with a suitable sensor.	56

Code	Error type/ NA 64	Corresponds NE 107	Message/description	Cause	Measure	Priority
746 (W746)	Warning C	Funktion check (C)	C>Sensor connection error - initialising	– Electromagnetic effects are greater than specifications in the technical data. This message normally only appears briefly. → See Technical Information TI00382P (Deltabar S), TI00383P (Cerabar S) or TI00416P (Deltapilot S). – Overpressure or low pressure present.	– Wait a few minutes. – Restart the device. Perform reset (Code 7864). – Block off electromagnetic effects or eliminate source of disturbance. – Reduce or increase pressure.	26
747 (A747)	Alarm B	Failure (F)	B>Sensor software not compatible to electronics	– Sensor does not suit the device (electronic sensor nameplate).	– Replace sensor with a suitable sensor.	16
748 (A748)	Alarm B	Failure (F)	B>Memory failure in signal processor	– Electromagnetic effects are greater than specifications in the technical data. → See Technical Information TI00382P (Deltabar S), TI00383P (Cerabar S) or TI00416P (Deltapilot S). – Main electronics defect.	– Block off electromagnetic effects or eliminate source of disturbance. – Replace main electronics.	15

10.1.1 On-site display error messages

If the device detects a defect in the on-site display during initialization, the following error messages can be displayed:

Message	Measure
Initialization, VU Electr. Defect A110	Exchange on-site display.
Initialization, VU Electr. Defect A114	
Initialization, VU Electr. Defect A281	
Initialization, VU Checksum Err. A110	
Initialization, VU Checksum Err. A112	
Initialization, VU Checksum Err. A171	

10.2 Response of outputs to errors

The device differentiates between the error types Alarm, Warning and Error.
→ See also Section 10.1 "Messages" und Page 112 ff, Table 22: OUTPUT and Page 127 ff, Table 31: MESSAGES.

Output	A (Alarm)	W (Warning)	E (Error: Alarm/Warning)
Current output	Assumes the value specified via the OUTPUT FAIL MODE[1)], ALT. CURR. OUTPUT[1] and SET MAX. ALARM[1] parameter. → See also the following section "Configuring current output for an alarm".	Device continues measuring.	For this error, you can enter whether the device should react as in the event of an alarm or as in the event of a warning. See corresponding "Alarm" or "Warning" column. (→ See also these Operating Instructions, parameter description SELECT ALARM TYPE.)
Bargraph (on-site display)	The bargraph adopts the value defined by the OUTPUT FAIL MODE [1] parameter.	The bargraph adopts the value which corresponds to the current value.	→ See this table, column "Alarm" or "Warning".
On-site display	– The measured value and message are displayed alternately – Measured value display: ϟ -symbol is permanently displayed. Message display – 3-digit number such as A122 and description	– The measured value and message are displayed alternately – Measured value display: ϟ -symbol flashes. Message display: – 3-digit number such as W613 and description	– The measured value and message are displayed alternately – Measured value display: see corresponding "Alarm" or "Warning" column Message display: – 3-digit number such as E731 and description
Remote operation (Digital communication)	In the case of an alarm, the ALARM STATUS[2)] parameter displays a 3-digit number such as 122 for "Sensor not connected".	In the case of a warning, the ALARM STATUS[2] parameter displays a 3-digit number such as 613 for "Simulation is active".	In the case of an error, the ALARM STATUS[2] parameter displays a 3-digit number such as 731 for "URV user limits exceeded".

1) Menu path: (GROUP SELECTION →) OPERATING MENU → OUTPUT

2) Menu path: (GROUP SELECTION →) OPERATING MENU → MESSAGES

10.3 Confirming messages

Depending on the settings for the ALARM DISPL. TIME (→ Page 128) and ACK. ALARM MODE (→ Page 127) parameters, the following measures should be taken to clear a message:

Settings [1]	Measures
– ALARM DISPL. TIME = 0 s – ACK. ALARM MODE = off	– Rectify cause of the message (see also Section 10.1).
– ALARM DISPL. TIME > 0 s – ACK. ALARM MODE = off	– Rectify cause of the message (see also Section 10.1). – Wait for the alarm display time to elapse.
– ALARM DISPL. TIME = 0 s – ACK. ALARM MODE = on	– Rectify cause of the message (see also Section 10.1). – Confirm message using ACK. ALARM parameter.
– ALARM DISPL. TIME > 0 s – ACK. ALARM MODE = on	– Rectify cause of the message (see also Section 10.1). – Confirm message using ACK. ALARM parameter. – Wait for the alarm display time to elapse. If a message appears and the alarm display time elapses before the message has been acknowledged, the message will be cleared once it has been acknowledged.

1) Menu path for ALARM DISPL. TIME and ACK. ALARM MODE: (GROUP SELECTION →) OPERATING MENU → DIAGNOSTICS → MESSAGES

If the on-site display displays a message, you can delete it with the E key.
If there are several messages, the on-site display shows the message which has the highest priority (see also Section 10.1). Once you have deleted this message using the E key, the message with the next highest priority is displayed. You can use the E key to delete each message, one after the other.
The ALARM STATUS parameter continues to display all the messages present.

Index

Numerics

100% POINT (813), "Height linearized" level type 96
100% POINT (813), "Linear" level type 86
4TH VALUE 117
4TH VALUE IS 117

A

ACK. ALARM (500) 127
ACK. ALARM MODE (401) 127
ACTIV LIN. TAB. X. 109
ACTIV LIN. TAB. Y. 109
ADDITIONAL INFO. (272) 117
ADJUST DENSITY (007), "Level Easy Height" level selection 75
ADJUST DENSITY (007)/(316), "Level" extended setup 101
ADJUST DENSITY (316), "Height linearized" level type . 94
ADJUST DENSITY (316), "Linear" level type 83
ADJUSTED DENSITY (810), "Height linearized" level type . 94
ADJUSTED DENSITY (810), "Linear" level type 83
ALARM DELAY (336) 128
ALARM DISPL. TIME (480) 128
ALARM STATUS (046) 127
ALLOWED MAX. TEMP (359) 117
ALLOWED MIN. TEMP (358) 117
ALT. CURR. OUTPUT (597) 114
ALTERNATE DATA (423) 112
ASSIGN CURRENT (760) 114

B

BOLTS MATERIAL. 119
BURST MODE. 115
BURST OPTION 115
BUS ADDRESS (345) 115

C

CALIB. OFFSET (319) 68
CALIBRATION MODE (008), "Level Easy Height" level selection 75
CALIBRATION MODE (008), "Level Easy Pressure" level selection 72
CALIBRATION MODE (392), "Height linearized" level type 93
CALIBRATION MODE (392), "Linear" level type. 82
COMB. MEASURAND (806). 90
CONFIG RECORDER (352) 117
CORRECTED PRESS. (434), "Flow" measuring mode . . 123
CORRECTED PRESS. (434), "Level" measuring mode . . 122
CORRECTED PRESS. (434), "Pressure" measuring mode . . . 121
COUNTER P > Pmax (380) 123
COUNTER P Pmin (467) 123
COUNTER T > Tmax (404) 124
COUNTER T Tmin (472) 124
CURR. CHARACT. (694), (695), (696), (764) 113
CURR. TRIM 20mA (042) 130
CURR. TRIM 4mA (045) 129
CURRENT MODE (052) 115
CUST. TAG NUMBER (055) 117
CUST. UNIT FACT. F (609) 99
CUST. UNIT FACT. H (705), "Height linearized" level type . 90, 95
CUST. UNIT FACT. H (705), "Linear" level type 80, 85
CUST. UNIT FACT. M (703), "Height linearized" level type 92
CUST. UNIT FACT. M (703), "Linear" level type. 82
CUST. UNIT FACT. M (703), "Pressure linearized" level type 89
CUST. UNIT FACT. P (317) 69, 71, 74, 78, 97
CUST. UNIT FACT. V (607), "Height linearized" level type . 91
CUST. UNIT FACT. V (607), "Linear" level type 81, 84
CUST. UNIT FACT. V (607), "Pressure linearized" level type 88
CUSTOMER UNIT F (610) 99
CUSTOMER UNIT H (706), "Height linearized" level type. . 90, 95
CUSTOMER UNIT H (706), "Linear" level type 79, 85
CUSTOMER UNIT M (704), "Height linearized" level type . 92
CUSTOMER UNIT M (704), "Linear" level type 81
CUSTOMER UNIT M (704), "Pressure linearized" level type 88
CUSTOMER UNIT P (075) 69, 71, 74, 78, 97
CUSTOMER UNIT V (608), "Height linearized" level type. . 91
CUSTOMER UNIT V (608), "Linear" level type 80, 84
CUSTOMER UNIT V (608), "Pressure linearized" level type 87

D

DAMPING VALUE (247) . 65–67, 70, 73, 77, 86, 89, 96, 100
DENSITY UNIT (001), "Level Easy Height" level selection. . 75
DENSITY UNIT (001)/(812), "Level" extended setup . 101
DENSITY UNIT (812), "Height linearized" level type 94
DENSITY UNIT (812), "Linear" level type 83
DEVICE DESIGN. (350) 117
DEVICE REVISION (699) 115
DEVICE SERIAL No (354). 117
DEVICE TYPE (002), Deltapilot S 115
DEVICE TYPE (351), Deltabar S 115
DEVICE TYPE (802), Cerabar S 115
DIAPHRAG. MAT. -. 119
DIAPHRAG. MAT. + ... 119
DIGITS SETS (840) 112
DIP STATUS (363) 118
DISPLAY CONTRAST (339) 112
DOWNLOAD SELECT (014). 125
DRAIN VENT MAT. 119
DRAIN VENT POS. 119

E

EDITOR TABLE (770), on-site operation 106
EDITOR TABLE (809), on-site operation 105
EDITOR TABLE, digital communication 108–109
ELECTR. SERIAL No (386) 117
EMPTY CALIB. (010), "Level Easy Height" level selection . . 76
EMPTY CALIB. (010), "Level Easy Pressure" level selection 72
EMPTY CALIB. (314), "Height linearized" level type . . . 93
EMPTY CALIB. (314), "Linear" level type 82
EMPTY CALIB. (314)/(010), QUICK SETUP 66
EMPTY HEIGHT. (009), "Level Easy Height" level selection 76
EMPTY PRESSURE (011), "Level Easy Pressure" level selection 72
EMPTY PRESSURE (710), "Height linearized" level type 94
EMPTY PRESSURE (710), "Linear" level type 83
ENTER RESET CODE (047) 124
ERROR No. 128

F

FACT. U. U. TOTAL. 1 (329) 110
FACT. U. U. TOTAL. 2 (330) 111
FILL FLUID 120
FILLING FLUID (366) 120
FLOW-MEAS. TYPE (640) 98
FULL CALIB. (004), "Level Easy Height" level selection. 76
FULL CALIB. (004), "Level Easy Pressure" level selection . . 72–73
FULL CALIB. (315), "Height linearized" level type 94
FULL CALIB. (315), "Linear" level type 83
FULL CALIB. (315)/(004), QUICK SETUP 66
FULL HEIGHT (006), "Level Easy Height" level selection 77
FULL PRESSURE (005), "Level Easy Pressure" level selection 73
FULL PRESSURE (711), "Height linearized" level type . . 94
FULL PRESSURE (711), "Linear" level type 83

G

GET LRV (309), "Pressure" measuring mode 70
GET URV (310), "Pressure" measuring mode 70

H

HARDWARE REV. (266) 117
HART DATE (481) 116
HART MESSAGE (271) 116
HART PRIMARY VALUE IS 116
HART VERSION (585) 114
HEIGHT UNIT (011), "Level Easy Height" level selection 75
HEIGHT UNIT (708), "Height linearized" level type . 90, 95
HEIGHT UNIT (708), "Linear" level type 79, 85
HistoROM AVAIL. (831) 125
HistoROM CONTROL (832) 125
HYDR. PRESS MAX. (761) 89
HYDR. PRESS MIN. (775) 89

I

INSERT PIN NO (048) 125

L

LANGUAGE (079) 62
LAST DIAG. CODE (564) 127
LEVEL BEFORE LIN (050) 122
LEVEL MAX (712) 93
LEVEL MIN (755) 93
LEVEL MODE (718) 78
LEVEL SELECTION (020) 63
LIN. EDIT MODE (397), on-site operation 105
LIN. EDIT MODE, digital communication 107
LIN. MEASURAND (804) 79
LINd. MEASURAND (805) 87
LINEAR/SQROOT (390) 114
LINE-NUMB (549), on-site operation 105–106
LINE-NUMB, digital communication 108
LONG TAG NUMBER (305) 117
LOW FLOW CUT-OFF (442) 103

M

MAIN DATA FORMAT (688) 112
MANUFACTOR ID (432) 116
MASS FLOW UNIT (571) 99
MASS UNIT (709), "Height linearized" level type 92
MASS UNIT (709), "Linear" level type 81
MASS UNIT (709), "Pressure linearized" level type 88
MAT. MEMBRANE (365) 120
MAT. PROC. CONN. - (361) 118
MAT. PROC. CONN. + (360) 118
MAX PRESS. FLOW (634) 67, 100
MAX. FLOW (311) 67, 100
MAX. MEAS. PRESS. (383) 123
MAX. MEAS. TEMP. (471) 124
MEAS. VAL. TREND (378) 121–123
MEASURED VALUE, "Flow" measuring mode 122
MEASURED VALUE, "Level" measuring mode 121
MEASURED VALUE, "Pressure" measuring mode 121
MEASURING MODE (389), on-site display 62
MEASURING TABLE (549) 106
MEASURING TABLE (717) 106
MENU DESCRIPTOR (419) 111
MIN. MEAS. PRESS. (469) 123
MIN. MEAS. TEMP. (474) 124
MIN. PRESS. FLOW 67
MINIMUM SPAN (591) 120
MOUNTING THREAD 119

N

NEG. FLOW TOT. 1 (400) 110
NEG. FLOW TOT. 2 (416) 111
NORM FLOW UNIT (661) 98
NR OF REMOTE SE 120
NUTS MATERIAL 119

O

OFFSET 20mA TRIM (044) 130
OFFSET 4mA TRIM (043) 130
OPERATING HOURS (409) 124
OUTPUT CURRENT (254) 112
OUTPUT FAIL MODE (388) 113

OUTPUT UNIT (023), "Level Easy Height" level selection . . 75
OUTPUT UNIT (023), "Level Easy Pressure" level selection . 71

P
PCB COUNT
T Tmin (492) 124
PCB COUNT T 124
PCB COUNT T > Tmax (488) 124
PCB MAX. TEMP. (490) 124
PCB MIN. TEMP. (494) 124
PCB TEMPERATURE (357) 117
Pmax ALARM WINDOW (333) 129
Pmax PROC. CONN. (570) 118
Pmax SENS. DAMAGE (252) 120
Pmin ALARM WINDOW (332) 129
Pmin SENS. DAMAGE (251) 120
POS. INPUT VALUE (563) 64–65, 68
POS. ZERO ADJUST (685) 64–65, 67–68
PREAMBLE NUMBER (036) 116
PRESS. ENG. UNIT (060) 69–70, 74, 77, 97
PRESS. SENS HILIM (485) 120
PRESS. SENS LOLIM (484) 120
PRESSURE (301), "Flow" measuring mode 123
PRESSURE (301), "Level" measuring mode 122
PRESSURE, "Pressure" measuring mode 121
PRIMARY VALUE 116
PROC. CONN. TYPE (482) 118
PROCESS DENSITY (025)/(811) 101

Q
Quick Setup "Flow" menu 66
Quick Setup "Level" menu 65
Quick Setup "Pressure" menu 64

R
REMOTE SEAL - 119
REMOTE SEAL + ... 119
RESET ALL ALARMS (603) 128
RESET PEAKHOLD (382) 124
RESET TOTALIZER1 (331) 111

S
SEAL TYPE (362) 119
SECONDARY VAL. IS 116
SECONDARY VALUE 116
SELECT ALARMTYPE (595), (600) 128
SENS H/WARE REV (487) 120
SENSOR MEAS.TYPE (581) 120
SENSOR PRESSURE (584), "Pressure" measuring mode 121–122
SENSOR PRESSURE (584), "Safety confirm." group 123
SENSOR SER. No. (250) 120
SENSOR TEMP. (367) 121–123
SET LRV (013), "Level Easy Height" level selection 77
SET LRV (013), "Level Easy Pressure" level selection . . . 73
SET LRV (245), "Pressure" measuring mode 64, 69
SET LRV (637), "Flow" extended setup 103
SET LRV (719), "Level" basic setup 86
SET LRV (762), "Level" extended setup 102
SET MAX. ALARM (342) 114
SET MIN. CURRENT (343) 114
SET URV (012), "Level Easy Height" level selection 77
SET URV (012), "Level Easy Pressure" level selection . . . 73
SET URV (246), "Pressure" measuring mode 64, 70
SET URV (638), "Flow" extended setup 104
SET URV (720), "Level" basic setup 86
SET URV (763), "Level" extended setup 102
SET. L. FL. CUT-OFF (323) 103
Sicherheitshinweise 4
SIM. CURRENT (270) 126
SIM. ERROR NO. (476) 127
SIM. LEVEL (714) 126
SIM. PRESSURE (414) 126
SIM. TANK CONT. (715) 126
SIM.FLOW VALUE (639) 126
SIMULATION MODE (413) 126
SOFTWARE VERSION (264) 117
STD. FLOW UNIT (660) 98
SUPPRESSED FLOW (375) 123

T
TABLE ACTIVATE 109
TABLE SELECTION (808), on-site operation 105
TABLE SELECTION, digital communication 107
TANK CONTENT (370) 122
TANK CONTENT MAX (713) 104, 107
TANK CONTENT MIN (759) 104, 107
TANK DESCRIPTION (815) 106, 109
TANK HEIGHT (859) 85
TANK VOLUME (858) 84
TEMP. ENG. UNIT (318), "Flow" measuring mode . . . 103
TEMP. ENG. UNIT (318), "Level" measuring mode . . . 101
TEMP. ENG. UNIT (318), "Pressure" measuring mode 100
THIRD VALUE 116
THIRD VALUE IS 116
THREAD 119
Tmax ALARM WINDOW (335) 129
Tmax SENSOR (369) 120
Tmin ALARM WINDOW (334) 129
Tmin SENSOR (368) 120
TOT. 1 USER UNIT (627) 110
TOT. 2 USER UNIT (628) 111
TOTAL. 1 OVERFLOW (655) 123
TOTAL. 2 OVERFLOW (658) 123
TOTALIZER 1 (652) 123
TOTALIZER 1 UNIT (398), (662), (664), (666) 110
TOTALIZER 2 (657) 123
TOTALIZER 2 UNIT (399), (663), (665), (667) 111

U
UNIT FLOW (391) 98
UNIT VOLUME (313), "Height linearized" level type 91
UNIT VOLUME (313), "Linear" level type 80, 84
UNIT VOLUME (313), "Pressure linearized" level type . . 87

X
X-VAL. (550), on-site operation 106
X-VAL., digital communication 108

Y

Y-VAL. (551), on-site operation 105–106
Y-VAL., digital communication 108

Z

ZERO POSITION (814), "Height linearized" level type . . 96
ZERO POSITION (814), "Linear" level type 86

146

147

www.addresses.endress.com

Endress+Hauser
People for Process Automation

A.9.5 Safety instructions

XA00235P-F/00/A3/16.17
71383446

Products Solutions Services

Safety Instructions
Deltabar S
PMD75, FMD77, FMD78

4-20 mA HART, PROFIBUS PA, FOUNDATION Fieldbus

ATEX: II 1/2 G Ex ia IIC T6...T4 Ga/Gb
IECEx: Ex ia IIC T6...T4 Ga/Gb

DE Dokument: XA00235P-F
Sicherheitshinweise für elektrische Betriebsmittel für explosionsgefährdete Bereiche → 🗎 5

EN Document: XA00235P-F
Safety instructions for electrical apparatus for explosion-hazardous areas → 🗎 13

FR Document: XA00235P-F
Conseils de sécurité pour matériels électriques destinés aux zones explosibles → 🗎 21

Endress+Hauser
People for Process Automation

BG - Правила за техниката на безопасност за електрически средства за производство във взривоопасни зони. Ако не разбирате езика на това ръководство има възможност да си поръчате при нас едно ръководство, преведено на езика на Вашата страна.
ЕС декларация за съответствие
Производителят Endress+Hauser декларира с това заявление за съответствие и с предявяването на сертификата CE, че този продукт отговаря на изискванията на съответните европейски директиви. Прилаганите директиви, норми и документи са указани в заявлението за съответствие.

CS - Bezpečnostní pokyny pro elektrické přístroje v místech s nebezpečím výbuchu. Pokud nemáte možnost přečíst si tento návod, můžete si u nás objednat návod přeložený do svého jazyka.
EU prohlášení o shodě
Společnost Endress+Hauser prohlašuje prostřednictvím tohoto prohlášení a použitím značky CE, že tento výrobek vyhovuje příslušným evropským směrnicím. Zmíněné směrnice, normy a dokumenty jsou uvedeny v Prohlášení o shodě.

DA - Sikkerhedsforskrifter for elektriske apparater certificeret til brug i eksplosionsfarlige områder. Hvis du ikke forstår denne manual, kan en oversat kopi af den på dit eget sprog bestilles fra os.
EU-overensstemmelseserklæring
Med denne overensstemmelseserklæring og tilføjelsen af CE-mærket sikrer producenten Endress+Hauser, at produktet er i overensstemmelse med relevante europæiske direktiver. Dokumentation for overensstemmelsen gives i de anførte direktiver, standarder og dokumenter.

EL - Οδηγίες ασφαλείας ηλεκτρικών συσκευών για επικίνδυνες για έκρηξη περιοχές. Σε περίπτωση που δεν μπορείτε να διαβάσετε αυτές τις οδηγίες, τότε μπορείτε να παραγγείλετε ένα αντίτυπο μεταφρασμένο στη γλώσσα σας.
Δήλωση συμμόρφωσης ΕΕ
Με αυτή τη δήλωση πιστότητας και την τοποθέτηση του σήματος CE ο κατασκευαστής Endress+Hauser δηλώνει, ότι αυτό το προϊόν συμορφώνεται με τις ευρωπαϊκές οδηγίες που πρέπει να εφαρμοστούν. Οι οδηγίες, τα πρότυπα και τα έγγραφα που εφαρμόστηκαν αναφέρονται στη δήλωση πιστότητας.

ES - Instrucciones de seguridad de aparatos eléctricos homologados para su utilización en áreas expuestas a riesgos de deflagración. Si no entiende este manual, puede pedir un ejemplar en su idioma.
Declaración UE de conformidad
Por la presente declaración y la inclusión de la marca CE, el fabricante Endress+Hauser, declara que el producto cumple con las directivas europeas pertinentes. Las directivas, normas y documentos de aplicación se indican en la declaración de conformidad.

ET - Ohutusjuhised plahvatusohtlikus keskkonnas kasutatavate elektriseadmete kohta. Kui Te ei saa käesolevast juhendist aru, võite meilt tellida Teie riigikeelde tõlgitud juhendi.
ELi vastavusdeklaratsioon
Tootja Endress+Hauser kinnitab juurdelisatud vastavusdeklaratsiooni esitamisega ja CE-märgise kandmisega tootele, et käesolev toode vastab kohaldatavate Euroopa Liidu direktiivide nõuetele. Kohaldatavad direktiivid, standardid ja dokumendid on ära toodud vastavusdeklaratsioonis.

FI - Turvallisuusohjeita sähkölaitteille, jotka on vahvistettu käytettäväksi räjähdysvaarallisilla alueilla. Jos et ymmärrä tätä käsikirjaa, voit tilata meiltä käännöksen omalla kansallisella kielellä.
EU-vaatimustenmukaisuusvakuutus
Valmistaja Endress+Hauser vakuuttaa tällä vaatimustenmukaisuustodistuksella ja CE-merkin kiinnittämisellä, että tämä tuote täyttää sovellettavien EU-direktiivien määräykset. Sovellettavat direktiivit, normit ja dokumentit on merkitty vaatimustenmukaisuustodistukseen.

HR - Sigurnosni naputci za elektromaterijal u sredini u kojoj prijeti opasnost od eksplozije. Ako Vam nije moguće čitati ovaj naputak, onda imate mogućnost da kod nas naručite naputak sastavljen na Vašem materinskom jeziku.
EU izjava o sukladnosti
Dobavljač Endress+Hauser jamči ovom izjavom i stavljanjem oznake CE da ovaj proizvod udovoljava zahtjevima europskih direktiva koje su na snazi. U izjavi o usuglašenosti se navode direktive, norme i dokumenti koji su na snazi.

HU - Biztonsági információk robbanásveszélyes területre való elektromos eszközökhöz. Amennyiben nem tudja elolvasni ezt az útmutatót, akkor megrendelheti az Ön anyanyelvére leforditva is.
EU-megfelelőségi nyilatkozat
Az Endress+Hauser mint gyártó jelen megfelelőségi nyilatkozattal és a CE-jelzés felhelyezésével kijelenti, hogy ez a termék megfelel az alkalmazandó európai irányelveknek. Az alkalmazott irányelvek, szabványok és dokumentumok a megfelelőségi nyilatkozatban fel vannak tüntetve.

IT - Istruzioni di sicurezza per apparecchiature elettriche certificate per l'utilizzo in aree con pericolo di esplosione. Se il presente manuale non risulta comprensibile potete ordinarcene una copia tradotta nella vostra lingua.
Dichiarazione di conformità UE
Con questa dichiarazione e con l'applicazione del marchio CE, il costruttore Endress+Hauser, assicura che il prodotto è conforme alle direttive europee vigenti. Prova della conformità è fornita dall'osservanza delle direttive, delle norme e dei documenti elencati.

LT - Elektros įrenginio saugumo nurodymai, susiję su sprogimo zonomis. Jeigu negalite perskaityti šios instrukcijos, kreipkitės į mus, kad užsisakytumėte į jūsų gimtąją kalbą išverstą instrukciją.
ES atitikties deklaracija
Gamintojas Endress+Hauser šia atitikties deklaracija ir CE ženklinimu patvirtina, kad gaminys atitinka taikytinas ES direktyvas. Taikomos direktyvos, normos ir dokumentai yra pateikiami atitikties deklaracijoje.

LV - Drošības norādījumi elektrisko darba instrumentu lietošanai apgabalos, kas pakļauti sprādzienbīstamībai. Ja Jums nav iespēju izlasīt šos norādījumus, Jūs varat pasūtīt pie mums tulkojumu Jūsu valsts valodā.
ES atbilstības deklarācija
Ražotājs Endress+Hauser ar šo atbilstības apliecinājumu un CE zīmola lietojumu apstiprina, ka produkts izgatavots sakaņā ar atbilstošajām Eiropas vadlīnijām. Piemērotās vadlīnijas, normas un dokumenti atrunāti atbilstības apliecinājumā.

NL - Veiligheidsinstructies voor elektrisch materieel in explosiegevaarlijke omgeving. Wanneer u deze handleiding niet kunt lezen, kunt u een in uw landstaal vertaalde handleiding bij ons bestellen.
EU-conformiteitsverklaring
De leverancier Endress+Hauser waarborgt met deze verklaring en het aanbrengen van het CE-teken, dat dit product overeenstemt met de geldende Europese richtlijnen. De geldende richtlijnen, normen en documenten zijn aangegeven in de conformiteitsverklaring.

PL - Wskazówki dot. bezpieczeństwa dla urządzeń elektrycznych stosowanych w obszarze zagrożonym wybuchem. Jeśli niniejsza instrukcja napisana jest w języku, którym się nie posługujesz, możesz zamówić u nas przetłumaczony dokument.
Deklaracja zgodności UE
Producent Endress+Hauser w niniejszej deklaracji zgodności wraz z nadaniem znaku CE oświadcza, że produkt ten jest zgodny z obowiązującą Europejską Dyrektywą. Zastosowane wytyczne, normy oraz dukumenty podane są w deklaracji zgodności.

PT - Instruções de segurança para dispositivos eléctricos certificados para utilização em áreas de risco de incêndio. Se não compreender este manual, pode encomendar-nos directamente uma cópia na sua língua.
Declaração UE de conformidade
Com esta declaração de conformidade e a aplicação da marca CE, o fabricante Endress+Hauser, garante que o produto obedece às directivas europeias a aplicar. As directivas, normas e documentos são apresentadas na declaração de conformidade.

RO - Indicații de siguranță pentru mijloacele de producție electrice pentru zonele periclitate de explozie. Dacă nu puteți citi aceste instrucțiuni, atunci puteți comanda la noi instrucțiunile traduse în limba țării dumneavoastră.
Declarația UE de conformitate
Producătorul Endress+Hauser declară prin declarația de conformitate alăturată și prin aplicarea semnului CE că acest produs corespunde directivelor europene aplicabile. Directivele, normele aplicate și documentele sunt menționate în declarația de conformitate.

SK - Bezpečnostné pokyny pre elektrické zariadenie prevádzkované v priestoroch s nebezpečenstvom výbuchu. Ak nemáte možnosť prečítať si tento návod, môžete si u nás objednať návod preložený do svojho jazyka.
EÚ vyhlásenie o zhode
Spoločnosť Endress+Hauser vyhlasuje prostredníctvom tohto vyhlásenia o konformite a použitím značky CE, že tento výrobok vyhovuje príslušným európskym smerniciam. Zmieňované smernice, normy a dokumenty sú uvedené vo Vyhlásení o konformite.

SL - Varnostni napotki glede električne opreme, namenjene za uporabo v eksplozivnih območjih. Če teh navodil ne morete razumeti, lahko pri nas naročite prevod v vaš jezik.
Izjava EU o skladnosti
Proizvajalec Endress+Hauser s to izjavo o skladnosti in navedbo oznake CE izjavlja, da je ta izdelek skladen s predpisanimi evropskimi smernicami. Upoštevane smernice, standardi in dokumenti so navedeni v izjavi o skladnosti.

SV - Säkerhetsföreskrifter för elektrisk utrustning certifierad för användning i explosionsfarliga områden. Om du inte förstår denna manual, kan en översatt kopia på ditt eget språk beställas från oss.
EU-försäkran om överensstämmelse
Endress+Hauser försäkrar med vidstående försäkran om överensstämmelse och med CE-märkningen att denna produkt överensstämmer med de tillämpbara europeiska riktlinjerna. De tillämpade riktlinjerna, normerna och dokumenten anges i försäkran om överensstämmelse.

EU-Konformitätserklärung
EU-Declaration of Conformity
Déclaration UE de Conformité

Endress+Hauser
People for Process Automation

CE

Company **Endress+Hauser GmbH+Co. KG, Hauptstraße 1, 79689 Maulburg**

erklärt als Hersteller in alleiniger Verantwortung, dass das Produkt
declares as manufacturer under sole responsibility, that the product
déclare sous sa seule responsabilité en qualité de fabricant que le produit

Product **DELTABAR S**

PMD75, FMD77, FMD78

Regulations den folgenden Europäischen Richtlinien entspricht:
conforms to following European Directives:
est conforme aux prescriptions des Directives Européennes suivantes :

ATEX	2014/34/EU (L96/309)
EMC	2014/30/EU (L96/79)
RoHS	2011/65/EU (L174/88)

Standards angewandte harmonisierte Normen oder normative Dokumente:
applied harmonized standards or normative documents:
normes harmonisées ou documents normatifs appliqués:

EN 50581	(2012)	EN 60079-0+A11(2013)	(2012)	EN 60079-31	(2014)
EN 61010-1	(2010)	EN 60079-11	(2012)		
EN 61326-1	(2013)	EN 60079-26	(2015)		
EN 61326-2-3	(2013)				
EN 61326-2-5	(2013)				

Certification EG-Baumusterprüfbescheinigung Nr. KEMA 03 ATEX 1561
EC-Type Examination Certificate No.
Numéro de l'attestation d'examen CE de typ

Ausgestellt von/issued by/délivré par DEKRA Certification B.V. (0344)
Qualitätssicherung TÜV Nord CERT (GmbH) (0044)
Quality assurance
Système d'assurance qualité

Maulburg, 27.02.2017
Endress + Hauser GmbH + Co. KG

i.V. Arno Götz

i.V. Dr. Arno Götz
Abteilungsleiter Produktsicherheit
Department Manager Product Safety
Responsable de certification

EG 03 034 -f

Deltabar S PMD75, FMD77, FMD78

4-20 mA HART, PROFIBUS PA, FOUNDATION Fieldbus

Inhaltsverzeichnis

Zugehörige Dokumentation 6
Ergänzende Dokumentation 6
Herstellerbescheinigungen 6
Herstelleradresse 6
Weitere Normen 6
Erweiterter Bestellcode 6
Sicherheitshinweise: Allgemein 9
Sicherheitshinweise: Besondere Bedingungen 9
Sicherheitshinweise: Installation 10
Sicherheitshinweise: Zone 0 10
Temperaturtabellen 11
Anschlusswerte 11

Zugehörige Dokumentation

Dieses Dokument ist fester Bestandteil der folgenden Betriebsanleitungen:

HART
- BA00270P/00
- BA00274P/00

PROFIBUS PA
- BA00294P/00
- BA00296P/00

FOUNDATION Fieldbus
- BA00301P/00
- BA00303P/00

Ergänzende Dokumentation

Explosionsschutz-Broschüre: CP00021Z/11

Die Explosionsschutz-Broschüre ist verfügbar:
- Im Download-Bereich der Endress+Hauser Internetseite: www.endress.com -> Downloads -> Suchbereich: Dokumentation -> Dokumentation: Broschüren und Kataloge -> Textsuche: CP00021Z
- Bei Geräten mit Dokumentation auf CD: Auf der CD

Herstellerbescheinigungen

EU-Konformitätserklärung

→ 🗎 3

EU-Baumusterprüfbescheinigung

Zertifikatsnummer:
KEMA 03 ATEX 1561

Liste der angewendeten Standards: Siehe EU-Konformitätserklärung.

IEC-Konformitätserklärung

Zertifikatsnummer:
IECEx KEM06.0011

Das Anbringen der Zertifikatsnummer bescheinigt die Konformität mit den folgenden Normen (abhängig von der Geräteausführung):
- IEC 60079-0 : 2011
- IEC 60079-11 : 2011
- IEC 60079-26 : 2014

Herstelleradresse

Endress+Hauser GmbH+Co. KG
Hauptstraße 1
79689 Maulburg, Deutschland

Adresse des Fertigungswerks: Siehe Typenschild.

Weitere Normen

Für die fachgerechte Installation sind unter anderem die folgende Normen in ihrer aktuellen Version zu beachten:
- IEC/EN 60079-14: "Explosionsgefährdete Bereiche - Teil 14: Projektierung, Auswahl und Errichtung elektrischer Anlagen"
- EN 1127-1: "Explosionsfähige Atmosphären - Explosionsschutz - Teil 1: Grundlagen und Methodik"

Erweiterter Bestellcode

Der erweiterte Bestellcode (Extended order code) wird auf dem Typenschild dargestellt, das auf dem Gerät gut sichtbar angebracht ist. Weitere Informationen zum Typenschild: Siehe Betriebsanleitung.

Aufbau des Erweiterten Bestellcodes

PMD75, FMD7x	–	**********	+	A*B*C*D*E*F*G*..
(Gerätetyp)		*(Grundspezifikationen)*		*(Optionale Spezifikationen)*

* = Platzhalter
An diesen Positionen wird eine Option dargestellt (Zahl oder Buchstabe), die aus der Spezifikation gewählt wurde.

Grundspezifikationen

In den Grundspezifikationen werden diejenigen Merkmale festgelegt, die für das Gerät zwingend notwendig sind (Muss-Merkmale). Die Anzahl der Positionen ist abhängig von der Anzahl der verfügbaren Merkmale. Die gewählte Option eines Merkmals kann dabei aus mehreren Positionen bestehen.

Optionale Spezifikationen

In den optionalen Spezifikationen werden zusätzliche Merkmale für das Gerät festgelegt (Kann-Merkmale). Die Anzahl der Positionen ist abhängig von der Anzahl der verfügbaren Merkmale. Um die Merkmale zu identifizieren, sind sie zweistellig aufgebaut (z.B. JA). Die erste Position (Kennung) steht für eine Merkmalsgruppe und besteht aus einer Zahl oder einem Buchstaben (z.B. J = Test, Zeugnis). An zweiter Position wird der Wert dargestellt, der für das Merkmal innerhalb der Gruppe steht (z.B. A = 3.1 Material (mediumberührt), Abnahmeprüfzeugnis).

Nähere Informationen zum Gerät den folgenden Tabellen entnehmen. Sie beschreiben die einzelnen Ex-relevanten Positionen und Kennungen innerhalb des erweiterten Bestellcodes.

Erweiterter Bestellcode: Deltabar S

Die folgenden Angaben bilden einen Auszug aus der Produktstruktur ab und dienen der Zuordnung:
- Dieser Dokumentation zum Gerät (anhand des erweiterten Bestellcodes auf dem Typenschild).
- Der im Dokument angegebenen Geräteoptionen.

Gerätetyp

PMD75

Grundspezifikationen

Position 1 (Zulassung)		
Gewählte Option		**Beschreibung**
PMD75	1	ATEX II 1/2 G Ex ia IIC T6...T4 Ga/Gb
	6 [1)]	ATEX II 1/2 G Ex ia IIC T6...T4 Ga/Gb, WHG
	I	IECEx Ex ia IIC T6...T4 Ga/Gb

1) Nur in Zusammenhang mit Position 2 (Ausgang, Bedienung) = A, B, C, D, E, F

Position 2 (Ausgang, Bedienung)		
Gewählte Option		**Beschreibung**
PMD75	A, B, C	4-20 mA HART
	D, E, F	4-20 mA HART, L_i = 0
	M, N, O	PROFIBUS PA
	P, Q, R	FOUNDATION Fieldbus

Position 10 (Zusatzausstattung 1)		
Gewählte Option		**Beschreibung**
PMD75	M	Überspannungsschutz

Position 11 (Zusatzausstattung 2)		
Gewählte Option		**Beschreibung**
PMD75	G	Separatgehäuse, Kabellänge siehe Zusatzspez. + Gehäuse Montagehalter, Wand/Rohr, 316L
	M	Überspannungsschutz

Optionale Spezifikationen

Kennung Jx (Test, Zeugnis)		
Gewählte Option		**Beschreibung**
PMD75	JN [1)]	Transmitter für Umgebungstemperatur −50 °C/-58 °F

1) Nur in Zusammenhang mit Position 1 (Zulassung) = 1, I

Die folgenden Angaben bilden einen Auszug aus der Produktstruktur ab und dienen der Zuordnung:
- Dieser Dokumentation zum Gerät (anhand des erweiterten Bestellcodes auf dem Typenschild).
- Der im Dokument angegebenen Geräteoptionen.

Gerätetyp

FMD77, FMD78

Grundspezifikationen

Position 1 (Zulassung)		
Gewählte Option		**Beschreibung**
FMD7x	1	ATEX II 1/2 G Ex ia IIC T6...T4 Ga/Gb
	6 [1)]	ATEX II 1/2 G Ex ia IIC T6...T4 Ga/Gb, WHG
	I	IECEx Ex ia IIC T6...T4 Ga/Gb

1) Nur in Zusammenhang mit Position 2 (Ausgang, Bedienung) = A, B, C, D, E, F

Position 2 (Ausgang, Bedienung)		
Gewählte Option		**Beschreibung**
FMD7x	A, B, C	4-20 mA HART
	D, E, F	4-20 mA HART, L_i = 0
	M, N, O	PROFIBUS PA
	P, Q, R	FOUNDATION Fieldbus

Position 11 (Zusatzausstattung 1)		
Gewählte Option		**Beschreibung**
FMD7x	M	Überspannungsschutz

Position 12 (Zusatzausstattung 2)		
Gewählte Option		**Beschreibung**
FMD7x	G	Separatgehäuse, Kabellänge siehe Zusatzspez. + Gehäuse Montagehalter, Wand/Rohr, 316L
	M	Überspannungsschutz

Optionale Spezifikationen

Kennung Jx (Test, Zeugnis)		
Gewählte Option		**Beschreibung**
FMD7x	JN [1)]	Transmitter für Umgebungstemperatur −50 °C/-58 °F

1) Nur in Zusammenhang mit Position 1 (Zulassung) = 1, I

Sicherheitshinweise: Allgemein

- Installations- und Sicherheitshinweise der Betriebsanleitung beachten.
- Das Personal muss für Montage, elektrische Installation, Inbetriebnahme und Wartung des Geräts folgende Bedingungen erfüllen:
  - Verfügt über Qualifikation, die seiner Funktion und Tätigkeit entspricht
  - Ist ausgebildet im Explosionsschutz
  - Ist vertraut mit den nationalen Vorschriften
- Gerät gemäß Herstellerangaben und nationaler Vorschriften installieren.
- Gerät nur für Messstoffe einsetzen, gegen die die prozessberührenden Materialien hinreichend beständig sind.
- Elektrostatische Aufladung vermeiden:
  - Von Kunststoffflächen (z.B. Gehäuse, Sensorelement, Sonderlackierung, angehängte Zusatzschilder, ..)
  - Von isolierten Kapazitäten (z.B. isolierte metallische Schilder)

Sicherheitshinweise: Besondere Bedingungen

- Bei Prozessanschlüssen aus Kunststoff oder bei Kunststoffbeschichtungen: Elektrostatische Aufladung der Kunststoffflächen vermeiden.
- Bei Flanschen und Plattierungen aus Titan oder Zirkonium: Reib- und Schlagfunken vermeiden.
- Bei zusätzlicher oder alternativer Sonderlackierung des Gehäuses oder anderer metallener Oberflächen:
  - Gefahr von elektrostatischer Auf- und Entladung beachten.
  - Oberflächen nicht trocken reiben.

Sicherheitshinweise: Installation

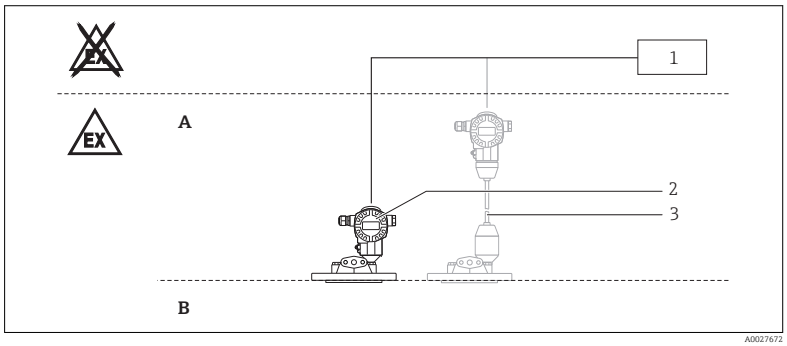

A Zone 1, Elektronik
B Zone 0, Prozess
1 Bescheinigtes zugehöriges Betriebsmittel
2 PMD75, FMD77, FMD78
3 Option: Separatgehäuse

Nach einer Gehäuse-Ausrichtung (Verdrehen): Arretierschraube wieder fest anziehen.

Eigensicherheit

- Der eigensichere Eingangsstromkreis des Geräts ist erdfrei. Seine Spannungsfestigkeit von min. 500 V_{eff} ist gegen Erde ausgeführt.
- Beim Zusammenschalten des Geräts mit bescheinigten eigensicheren Ex ib-Stromkreisen mit Explosionsgruppe IIC oder IIB: Zündschutzart ändert sich in Ex ib IIC oder Ex ib IIB. Beim Anschluss eines eigensicheren Ex ib-Stromkreises: Sensor nicht in Zone 0 einsetzen.

Überspannungsschutz

Gerätetyp PMD75, Grundspezifikation, Position 10 + 11 (Zusatzausstattung 1 + 2) = M
Gerätetyp FMD77, FMD78, Grundspezifikation, Position 11 + 12 (Zusatzausstattung 1 + 2) = M
Der eigensichere Eingangsstromkreis des Geräts ist erdfrei. Seine Spannungsfestigkeit von min. 290 V_{eff} ist gegen Erde ausgeführt.

Sicherheitshinweise: Zone 0

- Bei explosionsfähigen Dampf-Luft-Gemischen: Gerät nur unter atmosphärischen Bedingungen betreiben.
  - Temperatur: −20 … +60 °C
  - Druck: 80 … 110 kPa (0,8 … 1,1 bar)
  - Luft mit normalem Sauerstoffgehalt, üblicherweise 21 % (V/V)
- Wenn keine explosionsfähigen Gemische vorliegen oder Zusatzmaßnahmen getroffen sind: Gerät gemäß seiner Herstellerspezifikation auch außerhalb der atmosphärischen Bedingungen betreibbar.
- Zugehörige Geräte mit galvanischer Trennung zwischen eigensicheren und nicht eigensicheren Stromkreisen bevorzugen.
- Konstruktionsbedingt ist bei diesem Gerät ein Überspannungsschutz nicht erforderlich.

Temperaturtabellen

Zündschutzart	Temperaturklasse	Prozesstemperatur T_p (process)	Umgebungstemperatur T_a (ambient): Gehäuse
ATEX: II 1/2 G Ex ia IIC T6...T4 Ga/Gb IECEx: Ex ia IIC T6...T4 Ga/Gb	T6	≤ 80 °C	−40 °C ≤ T_a ≤ +40 °C
	T4	≤ 120 °C [1]	−40 °C ≤ T_a ≤ +70 °C

1) Nur Gerätetyp PMD75

Maximale Umgebungstemperatur am Gehäuse einhalten.

Gerätetyp PMD75
Die Prozesstemperaturen beziehen sich auf die Temperatur an der Trennmembran.

Gerätetyp FMD77
Deratings von der Prozesstemperatur zur Umgebungstemperatur am Gehäuse für verschiedene Einbausituationen und auch funktionale Aspekte: Siehe Betriebsanleitung.

Gerätetyp FMD78
Der externe Wärmeeinfluss ist nur vom Einbauort des Geräts selbst abhängig. Daher muss eine ausreichende Kapillarlänge bestellt werden, um das Gehäuse an einer Stelle mit zulässiger Umgebungstemperatur zu befestigen.

Optionale Spezifikation, Kennung Jx (Test, Zeugnis) = JN
Untere Umgebungstemperaturgrenze für den Explosionsschutz ändert sich auf −50 °C.

Anschlusswerte

Grundspezifikation, Position 2 (Ausgang, Bedienung) = A, B, C, D, E, F

Energieversorgung
U_i ≤ 30 V_{DC} I_i ≤ 300 mA P_i ≤ 1 W C_i ≤ 11,8 nF L_i ≤ 225 µH [1] oder L_i = 0 [2]

1) Grundspezifikation, Position 2 (Ausgang, Bedienung) = A, B, C
2) Grundspezifikation, Position 2 (Ausgang, Bedienung) = D, E, F

Grundspezifikation, Position 2 (Ausgang, Bedienung) = M, N, O, P, Q, R

Energieversorgung	
FISCO	Entity
U_i ≤ 17,5 V_{DC} I_i ≤ 500 mA P_i ≤ 5,5 W C_i ≤ 5 nF L_i ≤ 10 µH	U_i ≤ 24 V_{DC} I_i ≤ 250 mA P_i ≤ 1,2 W C_i ≤ 5 nF L_i ≤ 10 µH

Deltabar S PMD75, FMD77, FMD78

4-20 mA HART, PROFIBUS PA, FOUNDATION Fieldbus

Table of contents

Associated documentation 14
Supplementary documentation 14
Manufacturer's certificates 14
Manufacturer address 14
Other standards 14
Extended order code 14
Safety instructions: General 17
Safety instructions: Special conditions 17
Safety instructions: Installation 18
Safety instructions: Zone 0 18
Temperature tables 19
Connection data 19

Associated documentation

This document is an integral part of the following Operating Instructions:

HART
- BA00270P/00
- BA00274P/00

PROFIBUS PA
- BA00294P/00
- BA00296P/00

FOUNDATION Fieldbus
- BA00301P/00
- BA00303P/00

Supplementary documentation

Explosion-protection brochure: CP00021Z/11

The Explosion-protection brochure is available:
- In the download area of the Endress+Hauser website:
  www.endress.com -> Downloads -> Media Type: Documentation -> Documentation Type: Brochures and catalogs -> Text Search: CP00021Z
- On the CD for devices with CD-based documentation

Manufacturer's certificates

EU Declaration of Conformity

→ 🗎 3

EU type-examination certificate

Certificate number:
KEMA 03 ATEX 1561

List of applied standards: See EU Declaration of Conformity.

IEC Declaration of Conformity

Certificate number:
IECEx KEM06.0011

Affixing the certificate number certifies conformity with the following standards (depending on the device version):
- IEC 60079-0 : 2011
- IEC 60079-11 : 2011
- IEC 60079-26 : 2014

Manufacturer address

Endress+Hauser GmbH+Co. KG
Hauptstraße 1
79689 Maulburg, Germany

Address of the manufacturing plant: See nameplate.

Other standards

Among other things, the following standards shall be observed in their current version for proper installation:
- IEC/EN 60079-14: "Explosive atmospheres - Part 14: Electrical installations design, selection and erection"
- EN 1127-1: "Explosive atmospheres - Explosion prevention and protection - Part 1: Basic concepts and methodology"

Extended order code

The extended order code is indicated on the nameplate, which is affixed to the device in such a way that it is clearly visible. Additional information about the nameplate is provided in the associated Operating Instructions.

Structure of the extended order code

PMD75, FMD7x	–	**********	+	A*B*C*D*E*F*G*..
(Device type)		*(Basic specifications)*		*(Optional specifications)*

* = Placeholder
At this position, an option (number or letter) selected from the specification is displayed instead of the placeholders.

Basic specifications

The features that are absolutely essential for the device (mandatory features) are specified in the basic specifications. The number of positions depends on the number of features available.
The selected option of a feature can consist of several positions.

Optional specifications

The optional specifications describe additional features for the device (optional features).
The number of positions depends on the number of features available. The features have a 2-digit structure to aid identification (e.g. JA). The first digit (ID) stands for the feature group and consists of a number or a letter (e.g. J = Test, Certificate). The second digit constitutes the value that stands for the feature within the group (e.g. A = 3.1 material (wetted parts), inspection certificate).

More detailed information about the device is provided in the following tables. These tables describe the individual positions and IDs in the extended order code which are relevant to hazardous locations.

Extended order code: Deltabar S

The following specifications reproduce an extract from the product structure and are used to assign:
- This documentation to the device (using the extended order code on the nameplate).
- The device options cited in the document.

Device type

PMD75

Basic specifications

Position 1 (Approval)		
Selected option		**Description**
PMD75	1	ATEX II 1/2 G Ex ia IIC T6...T4 Ga/Gb
	6 [1)]	ATEX II 1/2 G Ex ia IIC T6...T4 Ga/Gb, WHG
	I	IECEx Ex ia IIC T6...T4 Ga/Gb

1) Only in connection with Position 2 (Output, Operating) = A, B, C, D, E, F

Position 2 (Output, Operating)		
Selected option		**Description**
PMD75	A, B, C	4-20 mA HART
	D, E, F	4-20 mA HART, L_i = 0
	M, N, O	PROFIBUS PA
	P, Q, R	FOUNDATION Fieldbus

Position 10 (Additional Option 1)		
Selected option		Description
PMD75	M	Overvoltage protection

Position 11 (Additional Option 2)		
Selected option		Description
PMD75	G	Separate housing, cable length see additional spec. + housing mounting bracket, wall/pipe, 316L
	M	Overvoltage protection

Optional specifications

ID Jx (Test, Certificate)		
Selected option		Description
PMD75	JN [1)]	Ambient temperature transmitter −50 °C/-58 °F

1) Only in connection with Position 1 (Approval) = 1, I

The following specifications reproduce an extract from the product structure and are used to assign:
- This documentation to the device (using the extended order code on the nameplate).
- The device options cited in the document.

Device type

FMD77, FMD78

Basic specifications

Position 1 (Approval)		
Selected option		Description
FMD7x	1	ATEX II 1/2 G Ex ia IIC T6...T4 Ga/Gb
	6 [1)]	ATEX II 1/2 G Ex ia IIC T6...T4 Ga/Gb, WHG
	I	IECEx Ex ia IIC T6...T4 Ga/Gb

1) Only in connection with Position 2 (Output, Operating) = A, B, C, D, E, F

Position 2 (Output, Operating)		
Selected option		Description
FMD7x	A, B, C	4-20 mA HART
	D, E, F	4-20 mA HART, L_i = 0
	M, N, O	PROFIBUS PA
	P, Q, R	FOUNDATION Fieldbus

Position 11 (Additional Option 1)		
Selected option		Description
FMD7x	M	Overvoltage protection

Position 12 (Additional Option 2)		
Selected option		**Description**
FMD7x	G	Separate housing, cable length see additional spec. + housing mounting bracket, wall/pipe, 316L
	M	Overvoltage protection

Optional specifications

ID Jx (Test, Certificate)		
Selected option		**Description**
FMD7x	JN [1)]	Ambient temperature transmitter −50 °C/-58 °F

1) Only in connection with Position 1 (Approval) = 1, I

Safety instructions: General

- Comply with the installation and safety instructions in the Operating Instructions.
- Staff must meet the following conditions for mounting, electrical installation, commissioning and maintenance of the device:
  - Be suitably qualified for their role and the tasks they perform
  - Be trained in explosion protection
  - Be familiar with national regulations
- Install the device according to the manufacturer's instructions and national regulations.
- Only use the device in media to which the wetted materials have sufficient durability.
- Avoid electrostatic charging:
  - Of plastic surfaces (e.g. housing, sensor element, special varnishing, attached additional plates, ..)
  - Of isolated capacities (e.g. isolated metallic plates)

Safety instructions: Special conditions

- In the case of process connections made of polymeric material or with polymeric coatings, avoid electrostatic charging of the plastic surfaces.
- For light metal flanges or flange faces (e.g. titanium, zirconium), avoid sparks caused by impact and friction.
- In the event of additional or alternative special varnishing on the housing or other metal parts:
  - Observe the danger of electrostatic charging and discharge.
  - Do not rub surfaces with a dry cloth.

Safety instructions: Installation

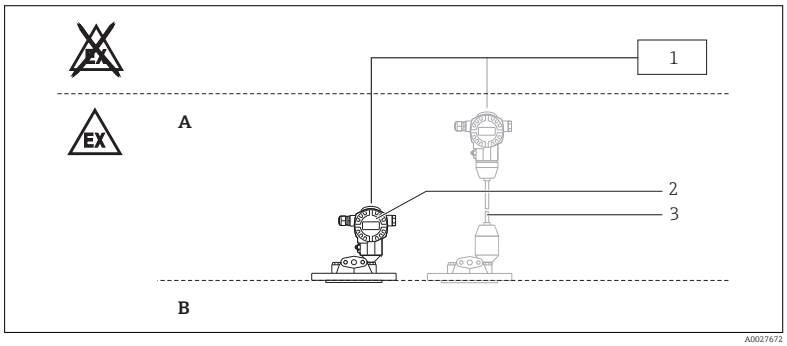

A Zone 1, Electronic
B Zone 0, Process
1 Certified associated apparatus
2 PMD75, FMD77, FMD78
3 Option: Separate housing

After aligning (rotating) the housing, retighten the fixing screw.

Intrinsic safety

- The intrinsically safe input power circuit of the device is isolated from ground. The dielectric strength is at least 500 V_{rms}.
- When the device is connected to certified intrinsically safe circuits of Category Ex ib for Equipment Groups IIC and IIB, the type of protection changes to Ex ib IIC and Ex ib IIB. Do not operate the sensor in Zone 0 if connecting to an intrinsically safe circuit of Category Ex ib.

Overvoltage protection

Device type PMD75, Basic specification, Position 10 + 11 (Additional Option 1 + 2) = M
Device type FMD77, FMD78, Basic specification, Position 11 + 12 (Additional Option 1 + 2) = M
The intrinsically safe input power circuit of the device is isolated from ground. The dielectric strength is at least 290 V_{rms}.

Safety instructions: Zone 0

- In the event of potentially explosive vapor/air mixtures, only operate the device under atmospheric conditions.
  - Temperature: −20 to +60 °C
  - Pressure: 80 to 110 kPa (0.8 to 1.1 bar)
  - Air with normal oxygen content, usually 21 % (V/V)
- If no potentially explosive mixtures are present, or if additional protective measures have been taken, the device may also be operated under non-atmospheric conditions in accordance with the manufacturer's specifications.
- Associated devices with galvanic isolation between the intrinsically safe and non-intrinsically safe circuits are preferred.
- Overvoltage protection is not required depending on the design of this device.

Temperature tables

Type of protection	Temperature class	Process temperature T_p (process)	Ambient temperature T_a (ambient): housing
ATEX: II 1/2 G Ex ia IIC T6...T4 Ga/Gb IECEx: Ex ia IIC T6...T4 Ga/Gb	T6	≤ 80 °C	−40 °C ≤ T_a ≤ +40 °C
	T4	≤ 120 °C [1]	−40 °C ≤ T_a ≤ +70 °C

1) Only Device type PMD75

Do not exceed the max. ambient temperature at the housing.

Device type PMD75
The process temperatures refer to the temperature at the separation membrane.

Device type FMD77
Deratings between process temperature and ambient temperature at the housing depending on the way of installation as well as functional aspects: See Operating Instructions.

Device type FMD78
The external heat influence depends only on the mountig position of the transmitter itself. Therefore a sufficient capillary length to mount the housing at a position with an allowed ambient temperature must be ordered.

Optional specification, ID Jx (Test, Certificate) = JN
Lower limit of the ambient temperature for explosion protection changes to −50 °C.

Connection data

Basic specification, Position 2 (Output, Operating) = A, B, C, D, E, F

Power supply
U_i ≤ 30 V_{DC} I_i ≤ 300 mA P_i ≤ 1 W C_i ≤ 11.8 nF L_i ≤ 225 µH [1] or L_i = 0 [2]

1) Basic specification, Position 2 (Output, Operating) = A, B, C
2) Basic specification, Position 2 (Output, Operating) = D, E, F

Basic specification, Position 2 (Output, Operating) = M, N, O, P, Q, R

Power supply	
FISCO	Entity
U_i ≤ 17.5 V_{DC} I_i ≤ 500 mA P_i ≤ 5.5 W C_i ≤ 5 nF L_i ≤ 10 µH	U_i ≤ 24 V_{DC} I_i ≤ 250 mA P_i ≤ 1.2 W C_i ≤ 5 nF L_i ≤ 10 µH

Deltabar S PMD75, FMD77, FMD78

4-20 mA HART, PROFIBUS PA, FOUNDATION Fieldbus

Sommaire

Documentation correspondante 22
Documentation complémentaire 22
Certificats constructeur 22
Adresse du fabricant 22
Autres normes 22
Référence de commande étendue 22
Conseils de sécurité : Généralités 25
Conseils de sécurité : Conditions particulières 25
Conseils de sécurité : Installation 26
Conseils de sécurité : Zone 0 26
Tableaux des températures 27
Valeurs de raccordement 27

Documentation correspondante

Le présent document fait partie intégrante des manuels de mise en service suivants :

HART
- BA00270P/00
- BA00274P/00

PROFIBUS PA
- BA00294P/00
- BA00296P/00

FOUNDATION Fieldbus
- BA00301P/00
- BA00303P/00

Documentation complémentaire

Brochure sur la protection contre les explosions : CP00021Z/11

La brochure sur la protection contre les explosions est disponible :
- Dans la zone de téléchargement sur le site Internet Endress+Hauser : www.endress.com -> Téléchargements -> Type de média : Documentation -> Type de documentation : Brochures et catalogues -> Recherche texte : CP00021Z
- Pour les appareils avec documentation sur CD : Sur le CD

Certificats constructeur

Déclaration UE de conformité

→ 🗎 3

Attestation d'examen UE de type

Numéro de certificat :
KEMA 03 ATEX 1561

Liste des normes appliquées : Voir la Déclaration UE de conformité.

Déclaration CEI de conformité

Numéro de certificat :
IECEx KEM06.0011

En apposant le numéro de certificat, on certifie la conformité aux normes suivantes (en fonction de l'exécution de l'appareil) :
- IEC 60079-0 : 2011
- IEC 60079-11 : 2011
- IEC 60079-26 : 2014

Adresse du fabricant

Endress+Hauser GmbH+Co. KG
Hauptstraße 1
79689 Maulburg, Allemagne

Adresse du site de production : Voir plaque signalétique.

Autres normes

Pour une installation conforme, il convient, entre autres, de respecter les normes suivantes dans leur version actuelle :
- IEC/EN 60079-14 : "Atmosphères explosives - Partie 14 : Conception, sélection et construction des installations électriques"
- EN 1127-1 : "Atmosphères explosives - Prévention de l'explosion et protection contre l'explosion - Partie 1 : Notions fondamentales et méthodologie"

Référence de commande étendue

La référence de commande étendue (Extended order code) est indiquée sur la plaque signalétique qui est apposée de façon bien visible sur l'appareil. Pour plus d'informations sur la plaque signalétique : Voir manuel de mise en service correspondant.

Structure de la référence de commande étendue

PMD75, FMD7x	–	**********	+	A*B*C*D*E*F*G*..
(Type d'appareil)		*(Spécifications de base)*		*(Spécifications optionnelles)*

* = Caractère de remplacement
Position pour une option sélectionnée dans la spécification (chiffre ou lettre).

Spécifications de base

Les caractéristiques indispensables pour l'appareil sont définies dans les spécifications de base. Le nombre de positions dépend du nombre de caractéristiques disponibles, l'option choisie pour une caractéristique pouvant être composée de plusieurs positions.

Spécifications optionnelles

Les caractéristiques additionnelles de l'appareil sont décrites dans les spécifications optionnelles. Le nombre de positions dépend du nombre de caractéristiques disponibles. Afin d'identifier les caractéristiques, elles sont composées de deux caractères (par ex. JA). La première position (identifiant), qui correspond à un groupe de caractéristiques (par ex. J = Test, certificat) se compose d'un chiffre ou d'une lettre. La deuxième position représente la valeur qui correspond à la caractéristique au sein du groupe (par ex. A = Matériau 3.1 (en contact avec le produit), certificat de réception).

Pour plus d'informations sur l'appareil, voir les tableaux suivants. Chaque caractère Ex ou chaque identifiant de la référence de commande étendue est décrit ici.

Référence de commande étendue : Deltabar S

Les indications suivantes représentent un extrait de la structure du produit et permettent l'affectation :
- De cette documentation à l'appareil (à l'aide de la référence de commande étendue sur la plaque signalétique).
- Des options d'appareil indiquées dans le document.

Type d'appareil

PMD75

Spécifications de base

Position 1 (Agrément)		
Option sélectionnée		**Description**
PMD75	1	ATEX II 1/2 G Ex ia IIC T6...T4 Ga/Gb
	6 [1]	ATEX II 1/2 G Ex ia IIC T6...T4 Ga/Gb, WHG
	I	IECEx Ex ia IIC T6...T4 Ga/Gb

1) Seulement en combinaison avec Position 2 (Sortie, programmation) = A, B, C, D, E, F

Position 2 (Sortie, programmation)		
Option sélectionnée		**Description**
PMD75	A, B, C	4-20 mA HART
	D, E, F	4-20 mA HART, L_I = 0
	M, N, O	PROFIBUS PA
	P, Q, R	FOUNDATION Fieldbus

Position 10 (Option supplémentaire 1)		
Option sélectionnée		**Description**
PMD75	M	Parafoudre

Position 11 (Option supplémentaire 2)		
Option sélectionnée		**Description**
PMD75	G	Boîtier séparé, longueur de câble voir spécif. complément. + boîtier étrier de montage, mural/tube, 316L
	M	Parafoudre

Spécifications optionnelles

Identifiant Jx (Test, certificat)		
Option sélectionnée		**Description**
PMD75	JN [1)]	Transmetteur de température ambiante −50 °C/-58 °F

1) Seulement en combinaison avec Position 1 (Agrément) = 1, I

Les indications suivantes représentent un extrait de la structure du produit et permettent l'affectation :
- De cette documentation à l'appareil (à l'aide de la référence de commande étendue sur la plaque signalétique).
- Des options d'appareil indiquées dans le document.

Type d'appareil

FMD77, FMD78

Spécifications de base

Position 1 (Agrément)		
Option sélectionnée		**Description**
FMD7x	1	ATEX II 1/2 G Ex ia IIC T6...T4 Ga/Gb
	6 [1)]	ATEX II 1/2 G Ex ia IIC T6...T4 Ga/Gb, WHG
	I	IECEx Ex ia IIC T6...T4 Ga/Gb

1) Seulement en combinaison avec Position 2 (Sortie, programmation) = A, B, C, D, E, F

Position 2 (Sortie, programmation)		
Option sélectionnée		**Description**
FMD7x	A, B, C	4-20 mA HART
	D, E, F	4-20 mA HART, L_i = 0
	M, N, O	PROFIBUS PA
	P, Q, R	FOUNDATION Fieldbus

Position 11 (Option supplémentaire 1)		
Option sélectionnée		**Description**
FMD7x	M	Parafoudre

Position 12 (Option supplémentaire 2)		
Option sélectionnée		Description
FMD7x	G	Boîtier séparé, longueur de câble voir spécif. complément. + boîtier étrier de montage, mural/tube, 316L
	M	Parafoudre

Spécifications optionnelles

Identifiant Jx (Test, certificat)		
Option sélectionnée		Description
FMD7x	JN [1]	Transmetteur de température ambiante −50 °C/-58 °F

1) Seulement en combinaison avec Position 1 (Agrément) = 1, I

Conseils de sécurité : Généralités

- Tenir compte des conseils d'installation et de sécurité du manuel de mise en service.
- Le personnel réalisant le montage, l'installation électrique, la mise en service et la maintenance de l'appareil doit remplir les conditions suivantes :
  - Disposer de la qualification correspondant à ses fonctions et à ses activités
  - Etre formé sur la protection contre les explosions
  - Etre informé sur les directives nationales en vigueur
- Installer l'appareil d'après les instructions du fabricant et les directives nationales en vigueur.
- N'utiliser l'appareil que dans des produits contre lesquels les matériaux en contact sont suffisamment résistants.
- Eviter le chargement électrostatique :
  - De surfaces synthétiques (par ex. boîtier, élément sensible, vernis spécial, plaques additionnelles attachées...)
  - De capacités isolées (par ex. plaques métalliques isolées)

Conseils de sécurité : Conditions particulières

- En cas de raccords process en matière synthétique ou avec revêtements synthétiques : Eviter le chargement électrostatique des surfaces synthétiques.
- Dans le cas de brides et placages en titane ou zirconium : Eviter les étincelles dues aux frottements ou aux chocs.
- En cas de vernis spécial supplémentaire ou alternatif du boîtier ou d'autres surfaces métalliques :
  - Prendre en compte un risque de charge ou de décharge électrostatique.
  - Ne pas frotter les surfaces avec un chiffon sec.

Conseils de sécurité : Installation

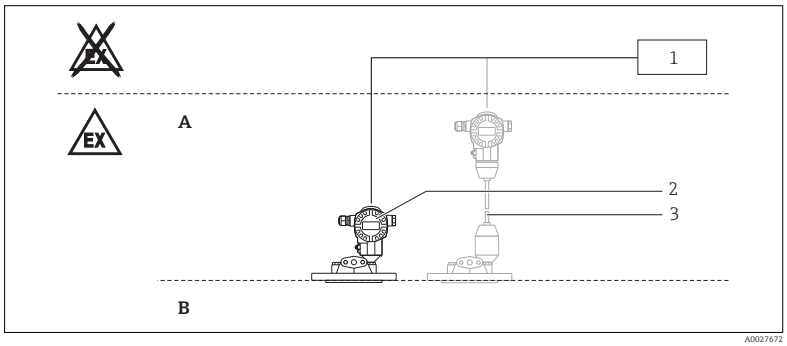

A Zone 1, Electronique
B Zone 0, Process
1 Matériel électrique associé certifié
2 PMD75, FMD77, FMD78
3 Option : Boîtier séparé

Après l'orientation du boîtier (rotation) : Serrer fortement les vis de verrouillage.

Sécurité intrinsèque

- Le circuit d'entrée à sécurité intrinsèque de l'appareil est isolé de la terre. Sa tenue diélectrique est de min. 500 V_{eff} par rapport à la terre.
- En cas de connexion de l'appareil à des circuits à sécurité intrinsèque de la catégorie Ex ib avec le groupe d'explosion IIC ou IIB : Le mode de protection se modifie comme suit : Ex ib IIC ou Ex ib IIB. Lors du raccordement d'un circuit à sécurité intrinsèque Ex ib : Ne pas utiliser le capteur en zone 0.

Parafoudre

Type d'appareil PMD75, Spécifications de base, Position 10 + 11 (Option supplémentaire 1 + 2) = M
Type d'appareil FMD77, FMD78, Spécifications de base, Position 11 + 12 (Option supplémentaire 1 + 2) = M
Le circuit d'entrée à sécurité intrinsèque de l'appareil est isolé de la terre. Sa tenue diélectrique est de min. 290 V_{eff} par rapport à la terre.

Conseils de sécurité : Zone 0

- En cas de mélanges explosifs vapeur-air : N'utiliser l'appareil que sous des conditions atmosphériques.
  - Température : −20 … +60 °C
  - Pression : 80 … 110 kPa (0,8 … 1,1 bar)
  - Air avec concentration normale en oxygène, généralement 21 % (V/V)
- En l'absence de mélange explosif ou si des mesures complémentaires ont été prises : Appareil utilisable selon les spécifications du fabricant même en dehors des conditions atmosphériques.
- Préférer les appareils associés avec séparation galvanique entre les circuits avec et sans sécurité intrinsèque.
- Du fait de sa construction, un parafoudre n'est pas nécessaire pour cet appareil.

Tableaux des températures

Mode de protection	Classe de température	Température de process T_p (process)	Température ambiante T_a (ambient) : Boîtier
ATEX : II 1/2 G Ex ia IIC T6...T4 Ga/Gb IECEx : Ex ia IIC T6...T4 Ga/Gb	T6	≤ 80 °C	−40 °C ≤ T_a ≤ +40 °C
	T4	≤ 120 °C [1]	−40 °C ≤ T_a ≤ +70 °C

1) Seulement Type d'appareil PMD75

Ne pas dépasser la température ambiante max. au boîtier.

Type d'appareil PMD75
Les températures de process se réfèrent à la température à la membrane de séparation.

Type d'appareil FMD77
Déclassement de la température de process par rapport à la température ambiante au boîtier en fonction des différents modes de montage ainsi que des aspects fonctionnels : Voir manuel de mise en service.

Type d'appareil FMD78
L'influence externe de la chaleur ne dépend que de l'emplacement de montage du transmetteur lui-même. Par conséquent, il faut commander une longueur de capillaire suffisante pour monter le boîtier à un endroit avec une température ambiante admissible.

Spécifications optionnelles, Identifiant Jx (Test, certificat) = JN
Le seuil de température ambiante inférieur pour la protection contre les explosions passe à −50 °C.

Valeurs de raccordement

Spécifications de base, Position 2 (Sortie, programmation) = A, B, C, D, E, F

Alimentation
U_i ≤ 30 V_{DC} I_i ≤ 300 mA P_i ≤ 1 W C_i ≤ 11,8 nF L_i ≤ 225 µH [1] ou L_i = 0 [2]

1) Spécifications de base, Position 2 (Sortie, programmation) = A, B, C
2) Spécifications de base, Position 2 (Sortie, programmation) = D, E, F

Spécifications de base, Position 2 (Sortie, programmation) = M, N, O, P, Q, R

Alimentation	
FISCO	Entity
U_i ≤ 17,5 V_{DC} I_i ≤ 500 mA P_i ≤ 5,5 W C_i ≤ 5 nF L_i ≤ 10 µH	U_i ≤ 24 V_{DC} I_i ≤ 250 mA P_i ≤ 1,2 W C_i ≤ 5 nF L_i ≤ 10 µH

71383446

www.addresses.endress.com

Endress+Hauser

People for Process Automation

A.9.6 Material certificates

EK1900513

Lamineries MATTHEY

Lamineries MATTHEY,
branch of Notz Metall AG
Montagu 38
Case postale
CH-2520 La Neuveville

Tél. +41 32 752 32 32
Fax +41 32 752 32 00
www.matthey.ch

Métaux laminés à froid
Kaltgewalzte Metalle
Cold rolled metals

Cuivre au béryllium
Beryllium kupfer
Beryllium Copper

Abnahmeprüfzeugnis nach EN 10204-3.1
Los Nr. : 1012432-01 **Prüfzeugnis Nr. : 1**

La Neuveville, 05.07.2019

Lieferanschrift
BERSTSCHEIBEN SCHLESINGER GmbH
Gewerbering 20
DE - 58579 Schalksmühle

Kunde :	**010539**	
I/Bestellung :	**7704**	
U/AB :	**CC-15896**	vom 22.05.2019
U/Lieferschein :	**BL-17343**	vom 05.07.2019
Gelieferte Menge :	**97 kg**	

U/Artikel : **D310A058.0X0.050AA** **1.4435 - Nichtrostender Stahl X2CrNiMo18-14-3 / ~ AISI 316L**

I/Artikel : Rs0050AA0058 Kundenspezifikation: TLB 410000176-F

Schmelze Nr. : 0523543 **Chemische Zusammensetzung**

Element	Fe	C	Si	Mn	P	S	Cr	Mo
Einheit	%	%	%	%	%	%	%	%
Sollwert	Rest	<= 0.03	<= 1	<= 2	<= 0.045	<= 0.015	17 - 19	2.5 - 3
Wert	Rest	= 0.024	= 0.5	= 1.01	= 0.025	= 0.001	= 17.45	= 2.72
Element	N	Ni	Cu					
Einheit	%	%	%					
Sollwert	<= 0.11	12.5 - 15						
Wert	= 0.043	= 12.8	= 0.29					

Abmessungen	Einheit	Ergebnis	Min.	Max.
Dicke	mm	**0.0489**	0.0470	0.0530
Dreite	mm	**58.14**	58.00	58.20

Mechanische Eigenschaften	Einheit	Ergebnis	Min.	Max.
Härte	HV	**168**		228
Zugfestigkeit, Rm	N/mm2	**713**	485	850
Dehngrenze, Rp0.2%	N/mm2	**569**	170	
Bruchdehnung A50mm	%	**42.1**	40.0	

Sonstige Eigenschaften	Einheit	Ergebnis	Min.	Max.
Rauigkeit Ra	µm	**0.08**		0.20
Korngrössen-Kennzahl (ASTM E112 oder ISO 643):		**11.5**	8.5	99.0

Lamineries MATTHEY

Lamineries Matthey
a unit of NOTZ METAL SA
Montagu 38
Case postale
CH-2520 La Neuveville

Tél. +41 32 752 32 32
Fax +41 32 752 32 00
www.matthey.ch

Métaux laminés à froid
Kaltgewalzte Metalle
Cold rolled metals

Cuivre au béryllium
Berylliumkupfer
Beryllium Copper

Zusätzliche Informationen
Werkstoff-Verwechslungsprüfung: i.O.
Sicht- und Masskontrolle : i.O.
IK-Beständ. (ASTM A262-E/G28(A-B)/ISO3651-2):i.O.
Zustand: lösungsgeglüht/weich
Entfettet, Oberflächenspannung >= 38 mN/m
Oberfläche gemäss EN 10088-2 OK
Gemäss NACE MR0175/ISO15156
Gemäss NACE MR0103/ISO17945

Es wird bestätigt, dass die Lieferung den Vereinbarungen der Auftragsbestätigung entspricht.

Lamineries MATTHEY,
branch of Notz Metall AG
Giovanni Rizzolo
Abnahmebeauftragte

Rizzolo Giovanni

Lamineries MATTHEY

Lamineries MATTHEY,
branch of Notz Metall AG
Montagu 38
Case postale
CH-2520 La Neuveville

Tél. +41 32 752 32 32
Fax +41 32 752 32 00
www.matthey.ch

Métaux laminés à froid
Kaltgewalzte Metalle
Cold rolled metals

Cuivre au béryllium
Berylliumkupfer
Beryllium Copper

Inspection Certificate according to EN 10204-3.1
Batch No. : 1012432-01 **Certificate No. : 1**

La Neuveville, 05.07.2019

Ship-to
BERSTSCHEIBEN SCHLESINGER GmbH
Gewerbering 20
DE - 58579 Schalksmühle

Customer :	**010539**	
Y/Order :	**7704**	
O/Confirmation :	**CC-15896**	dated 22.05.2019
O/Delivery Note :	**BL-17343**	dated 05.07.2019
Delivered Qty :	**97 kg**	

O/Part No. : **D310A058.0X0.050AA** **1.4435 - Stainless steel / X2CrNiMo18-14-3 / ~ AISI 316L**

Y/Part No. : Rs0050AA0058 Customer specification: TLB 410000176-F

Heat No. : 0523543 **Chemical composition**

Element	Fe	C	Si	Mn	P	S	Cr	Mo
Unit	%	%	%	%	%	%	%	%
Limit	Rem.	<= 0.03	<= 1	<= 2	<= 0.045	<= 0.015	17 - 19	2.5 - 3
Value	Rem.	= 0.024	= 0.5	= 1.01	= 0.025	= 0.001	= 17.45	= 2.72
Element	N	Ni	Cu					
Unit	%	%	%					
Limit	<= 0.11	12.5 - 15						
Value	= 0.043	= 12.8	= 0.29					

Dimensional attributes	Unit	Result	Min.	Max.
Thickness	mm	**0.0489**	0.0470	0.0530
Width	mm	**58.14**	58.00	58.20

Mechanical properties	Unit	Result	Min.	Max.
Hardness	HV	**168**		228
Tensile Strength, Rm	N/mm2	**713**	485	850
Yield Stress, Rp0.2%	N/mm2	**569**	170	
Elongation A50mm	%	**42.1**	40.0	

Other properties	Unit	Result	Min.	Max.
Roughness Ra	µm	**0.08**		0.20
Grain size number (ASTM E112 or ISO 643):		**11.5**	8.5	99.0

Lamineries MATTHEY

Lamineries Matthey
a unit of NOTZ METAL SA
Montagu 38
Case postale
CH-2520 La Neuveville

Tél. +41 32 752 32 32
Fax +41 32 752 32 00
www.matthey.ch

Métaux laminés à froid
Kaltgewalzte Metalle
Cold rolled metals

Cuivre au béryllium
Berylliumkupfer
Beryllium Copper

Additional information
Test of material confusion: ok
Visual and dimensional control: ok
Inter. Cor. (ASTM A262-E/G28 (A-B)/ISO 3651-2):ok
Temper: (solution) annealed
Degreased, surface tension >= 38 mN/m
Surface according to EN 10088-2 OK
According to NACE MR0175/ISO15156
According to NACE MR0103/ISO17945

We hereby confirm that the shipment corresponds to the stipulations of the order acknowledgment.

Lamineries MATTHEY SA
branch of Notz Metall AG
Giovanni Rizzolo
Inspector / Expert

Rizzolo Giovanni

Berstscheiben Schlesinger GmbH Schalksmühle Seit 1912	**Umstempelbescheinigung für Werkstoffe EN 10204-3.1** CERTIFICATE FOR MATERIAL EN 10204-3.1

Besteller / Customer: **Endress + Hauser SE & Co. KG**

Bestell-Nr / Order-no: **625/1017974484**

Zeichnungsnummer / Drawing-no: **211007188-B**

E+H Materialnummer: **71023198**

Zeugnisnummer / Certificate-no: **Batch No.: 1012432-01 Certificate No.: 1**

E+H-Identnummer / E+H-identnumber: **0XKN5**

Wir bestätigen hiermit, dass die gelieferten **Teile** **0049m00002** aus **Werkstoff** **1.4435** in den **Abmessungen** **0,050 x 58mm**, ausgewiesen durch **Abnahmeprüfzeugnis 3.1** nach EN 10204 der **Firma** **Lamineries MATTHEY,** gefertigt wurden und die **Stempelung** **EK1900513** vor dem Trennen durchgeführt worden ist.

We herewith confirm, that the supplied parts 0049m00002 are made of material 1.4435 with dimensions 0,050 x 58mm approved with Mill Test Certificate 3.1 acc. EN 10204 of company Lamineries MATTHEY and the stamping EK1900513 has been transferred before the cutting process.

Kennzeichnung alt / marking old: **1012432-01**

Kennzeichnung neu / marking new: **EK1900513 / 0XKN5**

Mit der Umstempelung beauftragt / Permission for stamping has been given to:

Herr Albrecht (A):

Das Umstempeln erfolgt mit Zustimmung des RWTÜV (TÜV-Az.: 8114413340)
Stamping will be done with permission of the RWTÜV (control-no. 8114413340)

Datum: 12.10.2020

Berstscheiben Schlesinger GmbH

i.A. J. Werthschulte

INSPECTION CERTIFICATE ACC. TO EN 10204 3.1

检 验 报 告 证 书 EN 10204 3.1

TO：GLOBAL TEK（XI'AN）CO. , LTD 时硕科技（西安）有限公司　　CERTIFICATE NO.(证书编号)：21C074

PART DESCRIPTION (品名):	Flange SD5 w.o.l.ex	PART NO./REV (零件号/版本)：	71192934/REV H	HEAT TREATMENT NUMBER 铸件炉批号：	M182

MATERIAL SPECIFICATION（材质标准）：EN 10213:2007+A1:2016 GX5 CrNiMo 19-11-2 1.4408 & ASTM A 351/A 351 M-18 CF3M (ACCORDING TO E+H'S TLB 410000205-D REQUIREMENT，根据E+H公司TLB 410000205技术文件要求)

1、CHEMICAL ANALYSIS（化学成份分析）

QUANTITY (pcs)	C (%)	Si (%)	Mn (%)	P (%)	S (%)	Cr (%)	Mo (%)	Ni (%)	Cu (%)	N (%)	Ferrite ratio (%)
数量(件)	0.03 max	1.50 max	1.50 max	0.035 max	0.025 max	18.00-20.00	2.00-2.50	9.00-12.00	0.50 max	0.15 max	>3, ≤15
480	0.023	0.87	1.03	0.020	0.017	18.69	2.27	10.91	0.11	0.07	10.92

合 格 PASS

2、MECHANICAL PROPERTIES （机械性能分析）

TEST BAR SIZE（试 棒 尺 寸）：d_0=Φ5±0.04　　L_0=25±0.25

TENSILE TEST AT ROOM TEMPERATURE 室温下拉力试验				Impact Test 冲击试验		Hardness Values 硬度测试
$R_{p0.2}$	$R_{p1.0}$	Rm	A	K_V		HB
屈服强度	屈服强度	抗 拉 强 度	伸 长 率	Individual Values 单值	Mean Value 平均值	硬度
(MPa)	(MPa)	(MPa)	(%)	(J)		(HB)
195min	220min	440-640 min	30 min	60 min		241 max
285	322	542	51	157	156	160
				152		
				160		

合 格 PASS

SOLUTION TREATMENT (1080-1150℃) 固 溶 化 处 理 (1080-1150℃)	
TEMPERATURE (℃) 温 度 (℃)	1080
HOLDING TIME (HR) 保 温 时 间（小时）	0.5
COOLING MEDIA 冷 却 介 质	WATER 水

3、INTERGRANULAR CORROSION TEST (晶间腐蚀测试)

M182	The intergranular corrosion test per EN ISO 3651-2, procedure A and ASTM A262, Practice E : Accept 晶间腐蚀试验依据 EN ISO 3651-2, procedure A 及 ASTM A262, Practice E：合格

4、CASTING VISUAL INSPECTION AND DIMENSION MEASUREMENT: ACCEPT (毛坯外观和尺寸检测：接收)；

5、IDENTIFICATION TEST： ACCEPT（鉴别测试：接收）；

6、IN ACCORDING TO AD2000-W0/W5/W10（按照AD2000 W0/W5/W10）；

7、IN ACCORDANCE TO NACE (MR0175/MR0103) （材料按照NACE (MR0175/MR0103)。

It is hereby certify that above results are true and correct in every detail.（兹证明以上结果真实、正确）

CERTIFIED BY: 解言朋　CHECKED BY: 黄权社　MANUFACTURER：XI'AN QINDING PRECISION CASTING CO.,LTD　DATE：2021/3/5

（出证人）　（审核人）　(制 造 厂)　(西 安 秦 鼎 精 铸 制 造 有 限 公 司)　（日期）

Xi'an Qinding Precision Casting Co.,Ltd. H Docimaster

西安秦鼎精铸制造有限公司 质量检验章

REV:6(版次：6，2020-12-08，增加第3项晶间腐蚀测试具体描述

Page:1/1

A.9.7 Test documentation

Testbericht

Endress+Hauser
People for Process Automation

Endprüfprotokoll

Bestellinformation

Kunde	Emmerthaler Apparatebau GmbH
Kundenbestellung	BST2101836/ 0
Auftragsnummer / Position	3023913786/0010
Interne Auftragsnummer / Position	3020298419000010

Geräteinformation

Bezeichnung	Deltabar S PMD75
TAG	.
Seriennummer	S8028A0109D
Bestellcode	PMD75-5KAV0/101
Erweiterter Bestellcode	PMD75-1BJ7HE1DHBA+Z1

Zusätzliche Information

Ausgang	4...20 mA, HART
Softwareversion	02.30.06
Sensor Messbereich	-3...3 bar
Eingestellter Messbereich	0...1 bar
Max. zulässige Messabweichung	±0.05 %
Ausgangsmodus	Linear

Verfahren

Testspezifikation	P0043, Vergleich des Prüflings (UUT) mit einem Normal
Prüfanlage	1213

Messbedingungen

Umgebungstemperatur	23.7 °C ±1 °C
Umgebungsluftdruck	976.3 mbar ±0.2 mbar
Umgebungsluftfeuchte	47.6 % rel. ±10 % rel.
Prüflage	

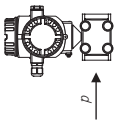

Durchführung

Maulburg, 2021-08-19, P00010

Dieses Dokument wurde elektronisch erstellt und ist ohne Unterschrift gültig.

Endress+Hauser SE+Co. KG
Postfach/P.O. Box 1261
D-79690 Maulburg
Germany
www.endress.com

Dokument-ID: FIR / S8028A0109D

Seite 1/2

Testbericht

Endress+Hauser
People for Process Automation

Endprüfprotokoll

Testergebnis

Abweichung
% des eingestellten Messbereichs

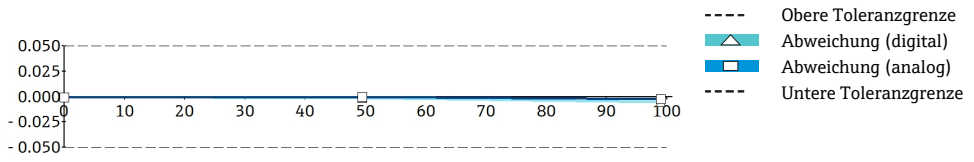

Test-punkt [%]	Referenz Druck [bar]	UUT Ausgang (digital) [bar]	Mess-fehler (digital) [%]	Mess-fehler (digital) [bar]	Referenz Druck (Iout bere.) [mA]	UUT Ausgang (analog) [mA]	Mess-fehler (analog) [%]
0	0.00000	-0.00000	-0.00012	0.00000	4.00000	3.99986	-0.00088
49	0.49431	0.49429	-0.00150	-0.00002	11.9090	11.9089	-0.00012
99	0.98961	0.98956	-0.00546	-0.00005	19.8338	19.8333	-0.00258

Hiermit bestätigen wir, dass alle Tests aus dem Qualitätsplan (IP0008P) erfolgreich durchgeführt wurden.

Test	Verfahrensnummer	Testbeschreibung
Vertragsprüfung	TS00001F	Gemäß den Anforderungen aus ISO 9001
Wareneingangsprüfung	TS00003F	Verifikation der Einhaltung der spezifizierten Anforderungen
Leiterplattentest	TS00009F	In-Circuit-Test und Funktionsprüfung
Hochspannungstest	TS00002F	Die verwendete Spannung wird abhängig von der Betriebsspannung, den Anschlüssen und Zulassungen und in Übereinstimmung mit geltenden nationalen / internationalen Normen verwendet
Schweißprüfung	TS00010F	Qualität und Dichtheit der Schweißnähte
Druckprüfung	TS00007F	Test der mechanischen Stabilität der drucktragenden Teile
Funktionsprüfung des Sensors	TS00022P	Prüfung der Sensorfunktion
Gerätekalibration	TS00023P	Messung, Abgleich und Verifikation von Messanfang, Messende und Ausgangssignal
Endprüfung des Geräts	TS00024P	Verifikation der allgemeinen Funktionalität und kundenspezifischer Einstellungen
Ausgangs-Sichtprüfung	TS00006F	Sichtprüfung auf Vollständigkeit und Korrektheit des Geräts und der Kennzeichnungen
Logistische Verifikation	TS00005F	Automatische Verifikation in der Lieferphase über Barcode, dass das Gerät dem Auftrag entspricht

Wir bestätigen, dass die zu Qualitätsprüfungen des Erzeugnisses eingesetzten Messmittel gültig kalibriert waren und auf nationale bzw. internationale Normale rückführbar sind.

Prüfbescheinigung

Endress+Hauser
People for Process Automation

Abnahmeprüfzeugnis gemäss EN 10204 - 3.1

Bestellinformation

Kunde	Emmerthaler Apparatebau GmbH Deutschland-31860 Emmerthal
Kundenbestellung	BST2101836/ 0
Auftragsnummer / Position	3023913786/000010
Interne Auftragsnummer / Position	3020298419/000010

Geräteinformationen

Bezeichnung	Deltabar S PMD75
TAG	.
Seriennummer	S8028A0109D
Bestellcode	PMD75-5KAV0/101 PMD75-1BJ7HE1DHBA+Z1

Erklärung

Hiermit bestätigen wir, dass die gelieferten Erzeugnisse den Vereinbarungen bei der Bestellung entsprechen. Gleichzeitig wird bestätigt, dass die festgestellten Prüfergebnisse die Anforderungen aus der Bestellung erfüllen. Darüber hinaus wird bescheinigt, dass bei der Herstellung der nachstehend aufgeführten Erzeugnisse die vorgeschriebenen spezifischen Prüfungen nach den bestehenden Endress+Hauser internen Prüfvorgaben durchgeführt und die erforderlichen Freigaben erteilt wurden. Die aufgelisteten Materialien sind mediumberührt und oder drucktragend.

Bauteileliste

Teil	Int. lot	Schmelze	Zeugnis-Nr.	Material	Hersteller
Membran	*0XKN5	0523543	1012432-01	1.4435	MATTHEY
Flansch	M182	M182	21C074	1.4408/316L	XI'AN QINDING

Die mit *gekennzeichneten internen Chargennummern dienen der internen Rückverfolgbarkeit und sind am Gerät nicht hart (nicht sichtbar) markiert.

Abnahmebeauftragter

Maulburg, 2021-08-19, i.A. Christian Doll

Dieses Dokument wurde elektronisch erstellt und ist ohne Unterschrift gültig.

Endress+Hauser SE+Co. KG
Hauptstrasse 1
79689 Maulburg
Deutschland
www.endress.com

Dokument-ID: 3020298419/3023913786_000010_S8028A0109D

A.10 Pressure transmitter

Name	Data
Designation	*Pressure transmitter*
Type	Cerabar S PMP 71 /
Number	
Type of manual	*Technical documentation*
Manufacturer	Endress & Hauser AG

Place of installation	TAG No.	Link
Blower oil system	3.2.1.X34	
Gearbox oil system100 L	3.2.1.X52	linktarget doesn't exist but @y.link.required='true'

A.10.1 Operating instructions

BA00271P/00/EN/19.16
71335659

valid from Software version:
02.30.zz

Products Solutions Services

Operating Instructions
Cerabar S PMC71, PMP71, PMP75

Process pressure measurement

HART COMMUNICATION PROTOCOL

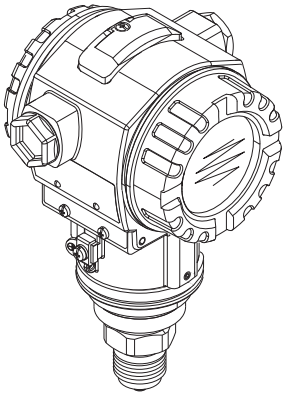

Endress+Hauser
People for Process Automation

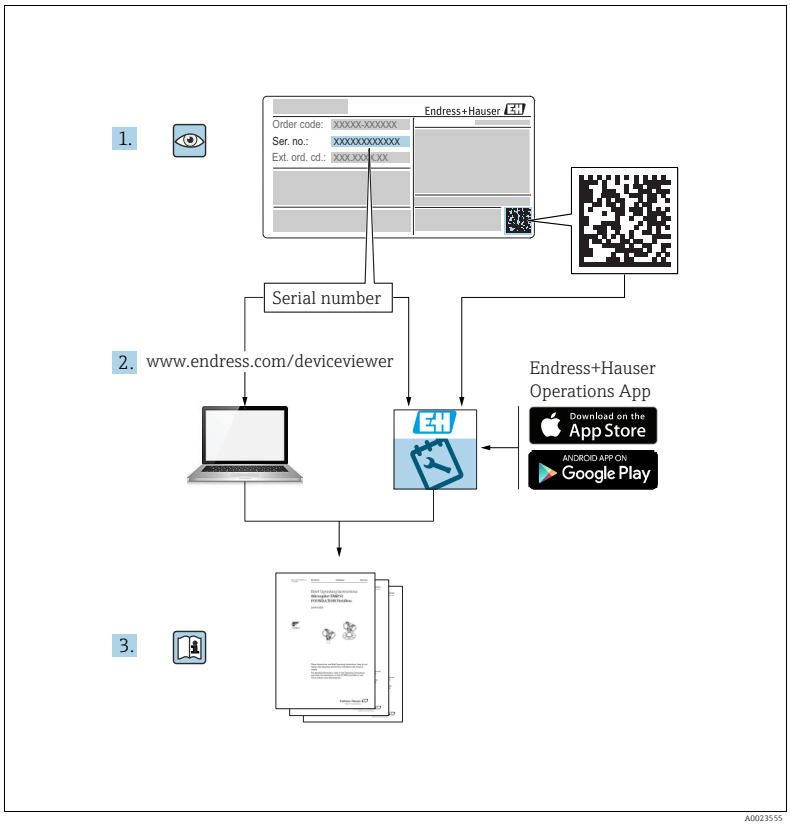

Make sure the document is stored in a safe place such that it is always available when working on or with the device.
To avoid danger to individuals or the facility, read the "Basic safety instructions" section carefully, as well as all other safety instructions in the document that are specific to working procedures.
The manufacturer reserves the right to modify technical data without prior notice. Your Endress+Hauser Sales Center will supply you with current information and updates to these Instructions.

Table of contents

1 Document information 4

1.1 Document function 4
1.2 Symbols used 4
1.3 Registered trademarks 5
1.4 Terms and abbreviations 6
1.5 Turn down calculation 7

2 Basic safety instructions 8

2.1 Requirements concerning the staff 8
2.2 Designated use 8
2.3 Workplace safety 8
2.4 Operational safety 8
2.5 Hazardous area 9
2.6 Product safety 9
2.7 Functional Safety SIL3 (optional) 9

3 Identification 10

3.1 Product identification 10
3.2 Device designation 10
3.3 Scope of delivery 12
3.4 Certificates and approvals 12

4 Installation 13

4.1 Incoming acceptance, transport, storage 13
4.2 Installation conditions 13
4.3 General installation instructions 14
4.4 Installation instructions 14
4.5 Post-installation check 25

5 Wiring 26

5.1 Connecting the device 26
5.2 Connecting the measuring unit 28
5.3 Potential matching 30
5.4 Overvoltage protection (optional) 30
5.5 Post-connection check 31

6 Operation. 32

6.1 On-site display (optional) 32
6.2 Operating elements 33
6.3 On-site operation – on-site display not connected 35
6.4 On-site operation – on-site display connected 38
6.5 HistoROM®/M-DAT (optional) 41
6.6 Operation via SFX100 44
6.7 Endress+Hauser operating program 44
6.8 Locking/unlocking operation 44
6.9 Factory setting (reset) 45

7 Commissioning 47

7.1 Configuring messages 47
7.2 Function check 47
7.3 Selecting language and measuring mode 47
7.4 Position adjustment 48
7.5 Pressure measurement 49
7.6 Level measurement 50

8 Maintenance 54

8.1 Cleaning instructions 54
8.2 Exterior cleaning 54

9 Troubleshooting 55

9.1 Messages 55
9.2 Response of outputs to errors 63
9.3 Confirming messages 65
9.4 Repair 66
9.5 Repair of Ex-certified devices 66
9.6 Spare Parts 66
9.7 Return 66
9.8 Disposal 66
9.9 Software history 67

10 Technical data 68

Index 69

1 Document information

1.1 Document function

These Operating Instructions contain all the information that is required in various phases of the life cycle of the device: from product identification, incoming acceptance and storage, to mounting, connection, operation and commissioning through to troubleshooting, maintenance and disposal.

1.2 Symbols used

1.2.1 Safety symbols

Symbol	Meaning
DANGER A0011189-DE	**DANGER!** This symbol alerts you to a dangerous situation. Failure to avoid this situation will result in seriousor fatal injury.
WARNING A0011190-DE	**WARNING!** This symbol alerts you to a dangerous situation. Failure to avoid this situation can result in seriousor fatal injury.
CAUTION A0011191-DE	**CAUTION!** This symbol alerts you to a dangerous situation. Failure to avoid this situation can result in minoror medium injury.
NOTICE A0011192-DE	**NOTICE!** This symbol contains information on procedures and other facts which do not result in personalinjury.

1.2.2 Electrical symbols

Symbol	Meaning	Symbol	Meaning
⎓	Direct current	~	Alternating current
≂	Direct current and alternating current	⏚	**Ground connection** A grounded terminal which, as far as the operator is concerned, is grounded via a grounding system.
⏚	**Protective ground connection** A terminal which must be connected to ground prior to establishing any other connections.	⏚	**Equipotential connection** A connection that has to be connected to the plant grounding system: This may be a potential equalization line or a star grounding system depending on national or company codes of practice.

1.2.3 Tool symbols

Symbol	Meaning
A0011221	Allen key
A0011222	Hexagon wrench

1.2.4 Symbols for certain types of information

Symbol	Meaning
A0011182	**Permitted** Indicates procedures, processes or actions that are permitted.
A0011184	**Forbidden** Indicates procedures, processes or actions that are forbidden.
A0011193	**Tip** Indicates additional information.
A0028658	Reference to documentation
A0028659	Reference to page
A0028660	Reference to graphic
1. , 2. , 3. ... A0031595	Series of steps
A0018343	Result of a sequence of actions
A0028673	Visual inspection

1.2.5 Symbols in graphics

Symbol	Meaning
1, 2, 3, 4, ...	Item numbers
1. , 2. , 3. ... A0031595	Series of steps
A, **B**, **C**, **D**, ...	Views

1.2.6 Symbols at the device

Symbol	Meaning
A0019159	**Safety instructions** Observe the safety instructions contained in the associated Operating Instructions.

1.3 Registered trademarks

KALREZ, VITON, TEFLON
Registered trademarks of E.I. Du Pont de Nemours & Co., Wilmington, USA

TRI-CLAMP
Registered trademark of Ladish & Co., Inc., Kenosha, USA

HART
Registered trademark of the FieldComm Group, Austin, USA.

GORE-TEX®
Registered trademarks of W.L. Gore & Associates, Inc., USA

1.4 Terms and abbreviations

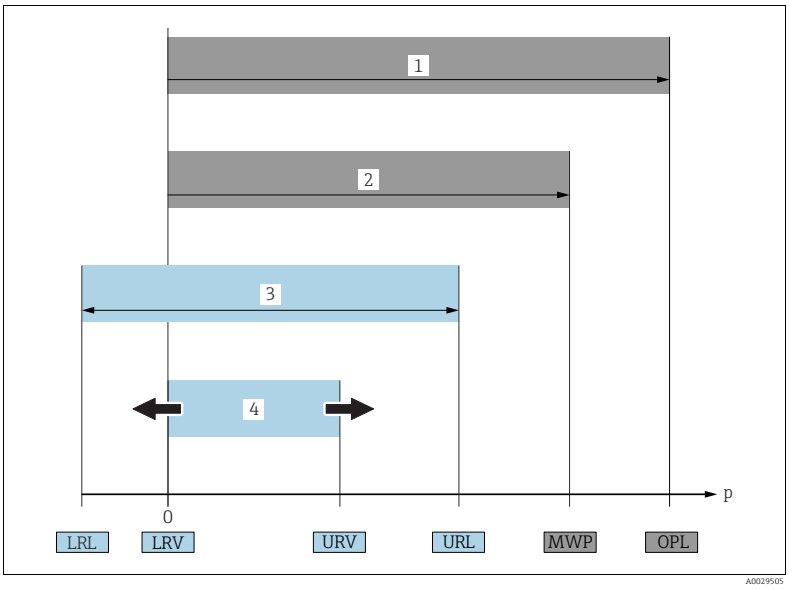

Position	Term/Abbreviation	Explanation
1	OPL	The OPL (over pressure limit = sensor overload limit) for the sensors depends on the lowest-rated element, with regard to pressure, of the selected components, i.e. the process connection must be taken into consideration in addition to the measuring cell. Also observe pressure-temperature dependency. For the relevant standards and additional notes, see technical information. The OPL may be applied for a limited time period.
2	MWP	The MWP (maximum working pressure) for the sensors depends on the lowest-rated element, with regard to pressure, of the selected components, i.e. the process connection has to be taken into consideration in addition to the measuring cell. Also observe pressure-temperature dependency. For the relevant standards and additional notes, see technical information. The MWP may be applied for an unlimited time.
3	Maximum sensor measuring range	Range between LRL and URL This span is the maximum calibratable/adjustable measuring span.
4	Calibrated/Adjusted measuring span	Range between LRV and URV Factory setting: 0...URL Other calibrated spans can be ordered with customised settings.
p	-	Pressure
-	LRL	Lower range limit
-	URL	Upper range limit
-	LRV	Lower range value
-	URV	Upper range value
-	TD	Turn down

1.5 Turn down calculation

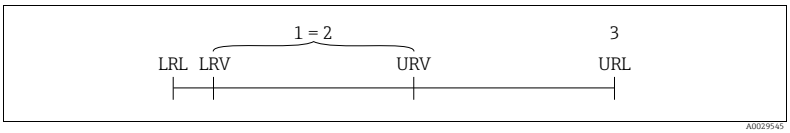

Fig. 1:

1 Calibrated/Adjusted measuring span
2 Zero-based span
3 Upper range limit

Example

- Sensor: 10 bar (150 psi)
- Upper range limit (URL) = 10 bar (150 psi)
- Calibrated/Adjusted measuring span: 0...5 bar (0...75 psi)
- Lower range value (LRV) = 0 bar
- Upper range value (URV) = 5 bar (75 psi)

Turn down (TD):

$$TD = \frac{URL}{|URV - LRV|}$$

$$TD = \frac{10\ \text{bar (150 psi)}}{|5\ \text{bar (75 psi)} - 0\ \text{bar (0 psi)}|} = 2$$

In this example, the TD is thus 2:1.
This span is based on the zero point.

2 Basic safety instructions

2.1 Requirements concerning the staff

The personnel for installation, commissioning, diagnostics and maintenance must fulfill the following requirements:
- Trained, qualified specialists: must have a relevant qualification for this specific function and task
- Are authorized by the plant owner/operator
- Are familiar with federal/national regulations
- Before beginning work, the specialist staff must have read and understood the instructions in the Operating Instructions and supplementary documentation as well as in the certificates (depending on the application)
- Following instructions and basic conditions

The operating personnel must fulfill the following requirements:
- Being instructed and authorized according to the requirements of the task by the facility's owner-operator
- Following the instructions in these Operating Instructions

2.2 Designated use

The Cerabar S is a pressure transmitter for measuring pressure and level.

2.2.1 Incorrect use

The manufacturer is not liable for damage caused by improper or non-designated use.
Verification for borderline cases:
For special fluids and fluids for cleaning, Endress+Hauser is glad to provide assistance in verifying the corrosion resistance of fluid-wetted materials, but does not accept any warranty or liability.

2.3 Workplace safety

For work on and with the device:
- Wear the required personal protective equipment according to federal/national regulations.
- Switch off the supply voltage before connecting the device.

2.4 Operational safety

Risk of injury!
- ▶ Operate the device in proper technical condition and fail-safe condition only.
- ▶ The operator is responsible for interference-free operation of the device.

Conversions to the device
Unauthorized modifications to the device are not permitted and can lead to unforeseeable dangers:
- ▶ If, despite this, modifications are required, consult with Endress+Hauser.

Repair
To ensure continued operational safety and reliability,
- ▶ Carry out repairs on the device only if they are expressly permitted.
- ▶ Observe federal/national regulations pertaining to repair of an electrical device.
- ▶ Use original spare parts and accessories from Endress+Hauser only.

2.5 Hazardous area

To eliminate a danger for persons or for the facility when the device is used in the hazardous area (e.g. explosion protection, pressure vessel safety):

- Based on the nameplate, check whether the ordered device is permitted for the intended use in the hazardous area.
- Observe the specifications in the separate supplementary documentation that is an integral part of these Instructions.

2.6 Product safety

This measuring device is designed in accordance with good engineering practice to meet state-of-the- art safety requirements, has been tested, and left the factory in a condition in which they are safe to operate. It fulfills general safety requirements and legal requirements. It also conforms to the EC directives listed in the device-specific EC declaration of conformity. Endress+Hauser confirms this fact by applying the CE mark.

2.7 Functional Safety SIL3 (optional)

If using devices for applications with safety integrity, the Functional Safety Manual must be observed thoroughly.

3 Identification

3.1 Product identification

The following options are available for identification of the measuring device:
- Nameplate specifications
- Order code with breakdown of the device features on the delivery note
- Enter serial numbers from nameplates in W@M Device Viewer (www.endress.com/deviceviewer) : All information about the measuring device is displayed.

For an overview of the technical documentation provided, enter the serial number from the nameplates in the W@M Device Viewer (www.endress.com/deviceviewer).

3.1.1 Manufacturer address

Endress+Hauser GmbH+Co. KG
Hauptstraße 1
79689 Maulburg, Germany
Address of the manufacturing plant: See nameplate.

3.2 Device designation

3.2.1 Nameplate

- The MWP (maximum working pressure) is specified on the nameplate. This value refers to a reference temperature of +20 °C (68°F) and may be applied to the device for an unlimited time. Observe temperature dependency of the MWP. The pressure values permitted at higher temperatures can be found in the standards EN 1092-1: 2001 Tab. 18 (With regard to their stability-temperature property, the materials 1.4435 and 1.4404 are grouped together under 13EO in EN 1092-1 Tab. 18. The chemical composition of the two materials can be identical.), ASME B 16.5a – 1998 Tab. 2-2.2 F316, ASME B 16.5a – 1998 Tab. 2.3.8 N10276, JIS B 2220.
- The test pressure corresponds to the over pressure limit (OPL) of the device = MWP x 1.5 [1].
- The Pressure Equipment Directive (2014/68/EU) uses the abbreviation "PS". The abbreviation "PS" corresponds to the MWP (maximum working pressure) of the measuring device.

1) The equation does not apply for PMP71 and PMP75 with a 40 bar (600 psi) or a 100 bar (1500 psi) measuring cell.

Aluminium and stainless steel housing (T14)

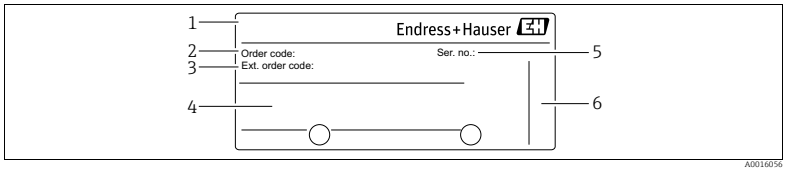

Fig. 2: Nameplate

1 Device name
2 Order code (for re-orders)
3 Extended order code (complete)
4 Technical data
5 Serial number (for identification)
6 Address of manufacturer

Devices for use in hazardous areas are fitted with an additional nameplate.

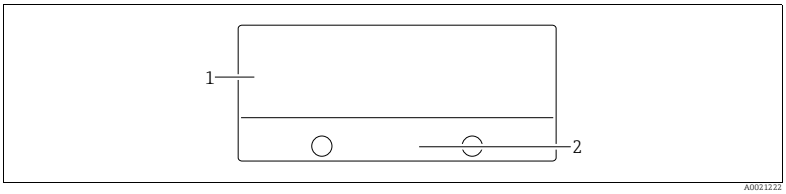

Fig. 3: Additional nameplate

1 Approval-specific information
2 Document number for safety instructions or drawing number

Devices suitable for oxygen applications or with PVDF process connection are fitted with an additional nameplate.

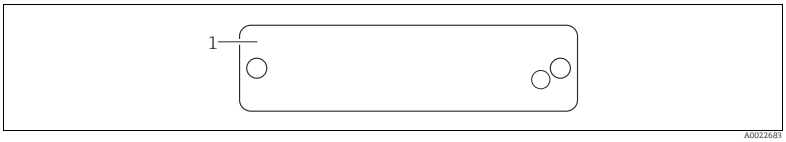

Fig. 4: Additional nameplate

1 Application limits

Hygenic stainless steel housing (T17)

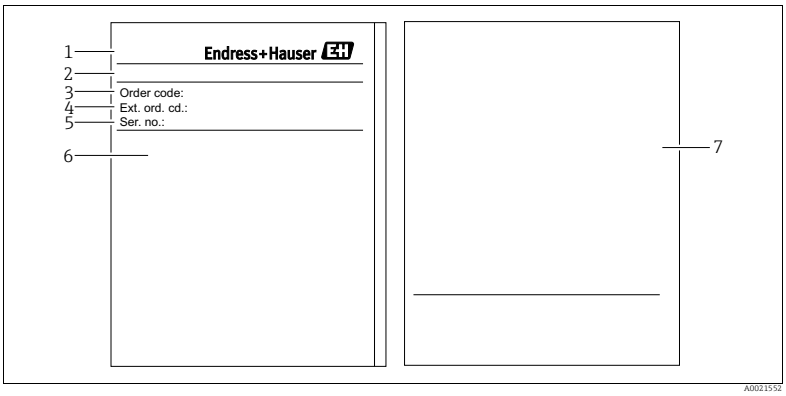

Fig. 5: Nameplate

1 Device name
2 Address of manufacturer
3 Order code (for re-orders)
4 Extended order code (complete)
5 Serial number (for identification)
6 Technical data
7 Approval-specific information and document number for safety instructions or drawing number

3.2.2 Identifying the sensor type

See parameter "Sensor Meas.Type" in Operating Instruction BA00274P.

3.3 Scope of delivery

The scope of delivery comprises:
- Cerabar S pressure transmitter
- For devices with the "HistoROM/M-DAT" option:
  CD-ROM with Endress+Hauser operating program
- Optional accessories

Documentation supplied:
- The Operating Instructions BA00271P and BA00274P are available via the Internet.
  → See: www.endress.com → Download.
- Brief Operating Instructions KA01019P
- Leporello KA00218P
- Final inspection report
- Also Safety Instructions with ATEX, IECEx and NEPSI devices
- Optional: factory calibration form, test certificates

3.4 Certificates and approvals

CE mark, declaration of conformity

The device is designed to meet state-of-the-art safety requirements, has been tested and left the factory in a condition in which it is safe to operate. The device complies with the applicable standards and regulations as listed in the EC declaration of conformity and thus complies with the statutory requirements of the EC Directives. Endress+Hauser confirms the successful testing of the device by affixing to it the CE mark.

4 Installation

4.1 Incoming acceptance, transport, storage

4.1.1 Incoming acceptance

- Check the packaging and the contents for damage.
- Check the shipment, make sure nothing is missing and that the scope of supply matches your order.

4.1.2 Transport

⚠ WARNING

Incorrect transportation

Housing, diaphragm and capillaries may become damaged, and there is a risk of injury!

- ▶ Transport the measuring device to the measuring point in its original packaging or by the process connection (with secure transport protection for the diaphragm).
- ▶ Follow the safety instructions and transport conditions for devices weighing more than 18 kg (39.6 lbs).
- ▶ Do not use capillaries as a carrying aid for the diaphragm seals.

4.1.3 Storage

The device must be stored in a dry, clean area and protected against damage from impact (EN 837-2).

Storage temperature range:

- −40 °C to +90°C (−40 °F to +194°F)
- On-site display: −40 °C to +85°C (−40 °F to +185°F)
- Separate housing: −40 °C to +60°C (−40 °F to +140°F)

4.2 Installation conditions

4.2.1 Dimensions

For dimensions, please refer to "Mechanical construction" section in TI00383P.

4.3 General installation instructions

- Devices with a G 1 1/2 thread:
  When screwing the device into the tank, the flat seal has to be positioned on the sealing surface
  of the process connection. To avoid additional strain on the process isolating diaphragm, the thread should never be sealed with hemp or similar materials.
- Devices with NPT threads:
  - Wrap Teflon tape around the thread to seal it.
  - Tighten the device at the hexagonal bolt only. Do not turn at the housing.
  - Do not overtighten the thread when screwing. Max. torque: 20 to 30 Nm (14.75 to 22.13 lbf ft)
- For the following process connections a tightening torque of max. 40 Nm (29.50 lbf ft) is required:
  - Thread ISO228 G1/2 (Order option "1A" or "1B")
  - Thread DIN13 M20 x 1.5 (Order option "1N" or "1P")

4.3.1 Mounting sensor modules with PVDF thread

⚠ WARNING
Risk of damage to process connection!
Risk of injury!
▶ Sensor modules with PVDF thread must be installed with the mounting bracket provided!

⚠ WARNING
Material fatigue from pressure and temperature!
Risk of injury if parts burst! The thread can become loose if exposed to high pressure and temperatures.
▶ The integrity of the thread must be checked regularly and the thread may need to be re-tightened with the maximum tightening torque of 7 Nm (5.16 lbf ft). Teflon tape is recommended for sealing the ½" NPT thread.

4.4 Installation instructions

- Due to the orientation of the Cerabar S, there may be a shift in the measured value, i.e. when the container is empty, the measured value does not display zero. You may correct this zero point shift either directly on the device using the E-key or by remote operation. See
  → 34, "Function of the operating elements – on-site display not connected" or
  → 48, "Position adjustment".
- For PMP75, please refer to → 17, "Installation instructions for devices with diaphragm seals – PMP75".
- To ensure optimal readability of the on-site display, it is possible to rotate the housing up to 380°. → 24, "Rotating the housing".
- Endress+Hauser offers a mounting bracket for installing on pipes or walls.
  → 21, "Wall and pipe mounting (optional)".

4.4.1 Installation instructions for devices without diaphragm seals – PMP71, PMC71

NOTICE
Damage to the device!
If a heated Cerabar S is cooled during the cleaning process (e.g. by cold water), a vacuum develops for a short time, whereby moisture can penetrate the sensor through the pressure compensation (1).

▶ If this is the case, mount the Cerabar S with the pressure compensation (1) pointing downwards.

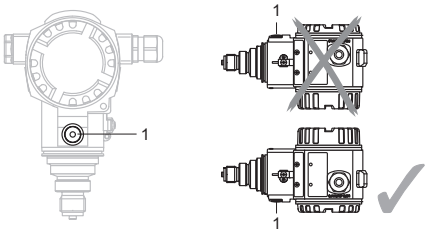

- Keep the pressure compensation and GORE-TEX® filter (1) free from contaminations and water.
- Cerabar S without diaphragm seal are mounted as per the norms for a manometer (DIN EN 837-2). We recommend the use of shut-off devices and siphons. The orientation depends on the measuring application.
- Do not clean or touch process isolating diaphragm seals with hard or pointed objects.
- The device must be installed as follows in order to comply with the cleanability requirements of the ASME-BPE (Part SD Cleanability):

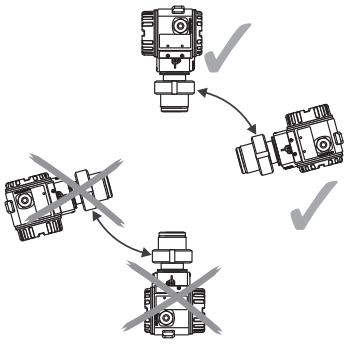

Pressure measurement in gases

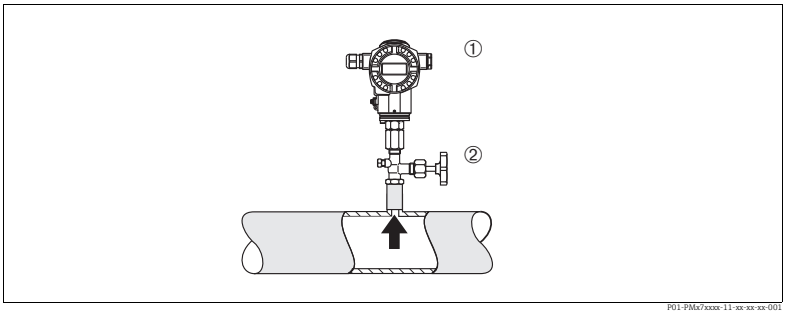

Fig. 6: Measuring arrangement for pressure measurement in gases

1 Cerabar S
2 Shut-off device

Mount Cerabar S with shut-off device above the tapping point so that any condensate can flow into the process.

Pressure measurement in steams

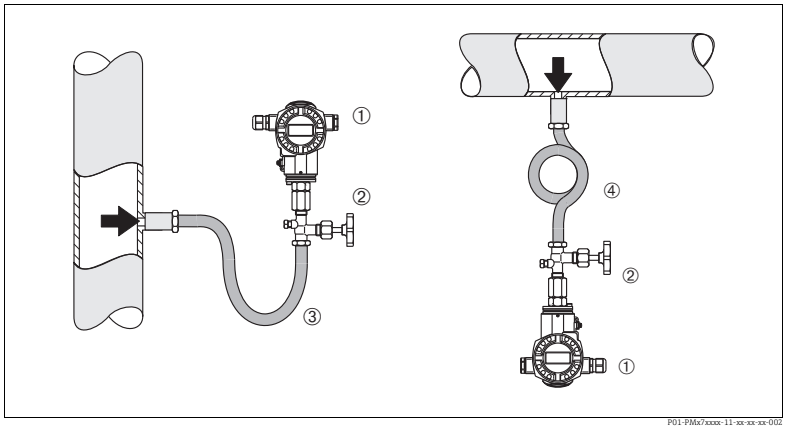

Fig. 7: Measuring arrangement for pressure measurement in steams

1 Cerabar S
2 Shut-off device
3 U-shaped siphon
4 Circular siphon

- Use siphons for pressure measurement in steam. The siphon reduces the temperature to almost ambient temperature. Preferably mount the Cerabar S with the siphon below the tapping point.
  Advantages:
  – defined water column only causes minimal/negligible measured errors
  – only minimal/negligible thermal effects on the device
  Mounting above the tapping point is also possible. Pay attention to the maximum permitted ambient temperature of the transmitter!
- Fill the siphon with liquid before commissioning.

Pressure measurement in liquids

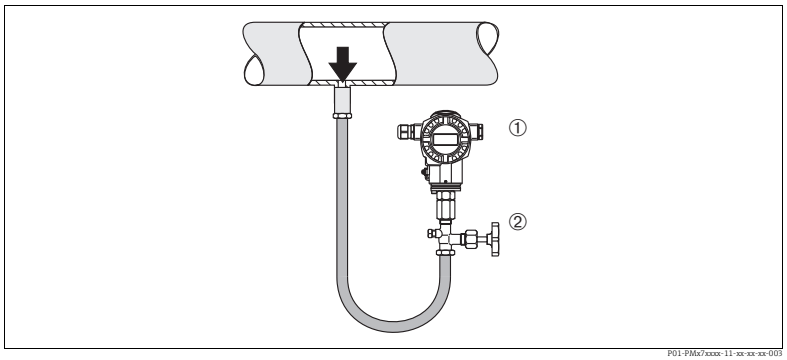

Fig. 8: Measuring arrangement for pressure measurement in liquids

1 Cerabar S
2 Shut-off device

Mount Cerabar S with shut-off device below or at the same level as the tapping point.

Level measurement

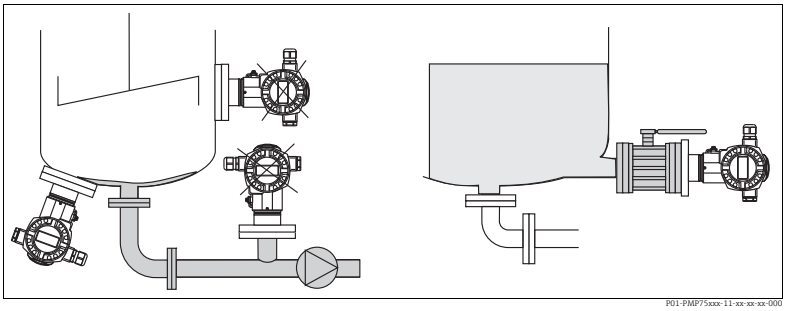

Fig. 9: Measuring arrangement for level

- Mount Cerabar S below the lowest measuring point.
- Do not mount the device at the following positions:
  In the fill flow, in the tank outlet or at a point in the container which could be affected by pressure pulses from an agitator.
- Do not mount the device in the suction area of a pump.
- The calibration and functional test can be carried out more easily if you mount the device after a shut-off device.

4.4.2 Installation instructions for devices with diaphragm seals – PMP75

- Cerabar S devices with diaphragm seals are screwed in, flanged or clamped, depending on the type of diaphragm seal.
- Please note that the hydrostatic pressure of the liquid columns in the capillaries can cause zero point shift. The zero point shift can be corrected.
- Do not clean or touch the process isolating diaphragm of the diaphragm seal with hard or pointed objects.
- Do not remove process isolating diaphragm protection until shortly before installation.

NOTICE
Improper handling!
Damage to the device!
- ▶ A diaphragm seal and the pressure transmitter together form a closed, oil-filled calibrated system. The fill fluid hole is sealed and may not be opened.
- ▶ When using a mounting bracket, sufficient strain relief must be ensured for the capillaries in order to prevent the capillary bending down (bending radius ≥ 100 (3.94 in)).
- ▶ Please observe the application limits of the diaphragm seal filling oil as detailed in the Technical Information for Cerabar S TI00383P, "Planning instructions for diaphragm seal systems" section.

NOTICE
In order to obtain more precise measurement results and to avoid a defect in the device, mount the capillaries as follows:
- ▶ Vibration-free (in order to avoid additional pressure fluctuations)
- ▶ Not in the vicinity of heating or cooling lines
- ▶ Insulate if the ambient temperature is below or above the reference temperature
- ▶ With a bending radius of ≥ 100 mm (3.94 in).
- ▶ Do not use the capillaries as a carrying aid for the diaphragm seals!

Vacuum application

For applications under vacuum, Endress+Hauser recommends mounting the pressure transmitter below the diaphragm seal. This prevents vacuum loading of the diaphragm seal caused by the presence of fill fluid in the capillary.

When the pressure transmitter is mounted above the diaphragm seal, the maximum height difference H1 in accordance with the illustrations below must not be exceeded.

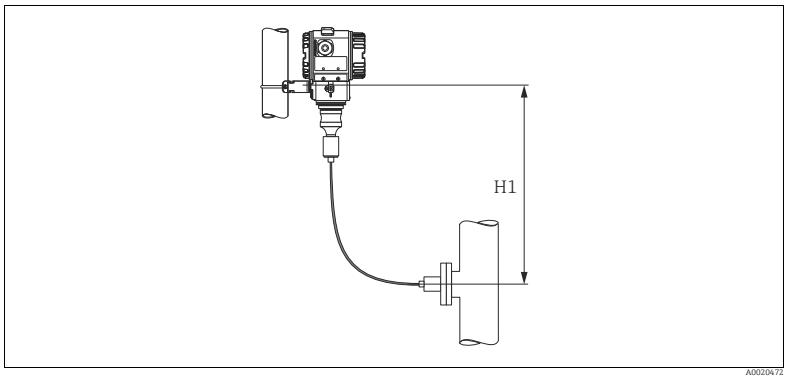

Fig. 10: Installation above the lower diaphragm seal

The maximum height difference depends on the density of the filling oil and the smallest ever pressure that is permitted to occur at the diaphragm seal (empty vessel), see illustration below:

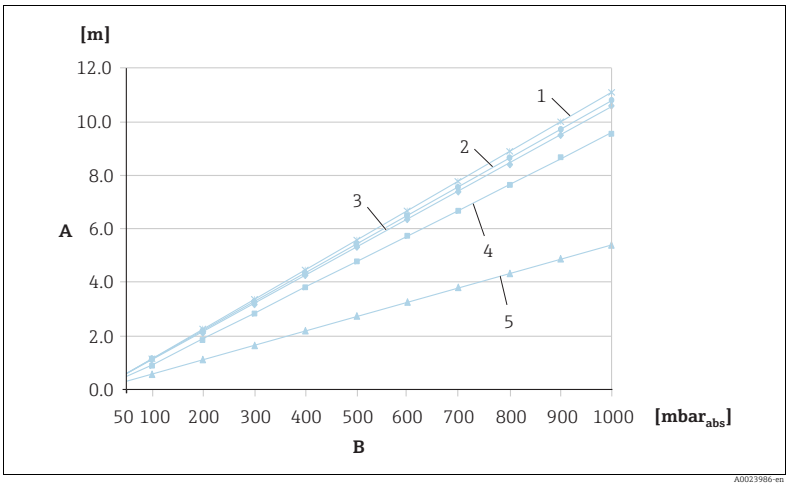

Fig. 11: Diagram of maximum installation height above the lower diaphragm seal for vacuum applications depending on the pressure at the diaphragm seal

A Height difference H1
B Pressure at diaphragm seal
1 Low temperature oil
2 Vegetable oil
3 Silicone oil
4 High-temperature oil
5 Inert oil

Mounting with temperature isolator

Endress+Hauser recommends the use of temperature isolators in the event of constant extreme medium temperatures which lead to the maximum permissible electronics temperature of +85 °C (+185°F) being exceeded. Depending on the filling oil used, diaphragm seal systems with temperature isolators can be used for maximum temperatures of up to +400 °C (+752 °F). → For the temperature application limits, see technical Information, "Diaphragm seal filling oils" section. To minimize the influence of rising heat, Endress+Hauser recommends the device be mounted horizontally or with the housing pointing downwards. The additional installation height also brings about a maximum zero point shift of 21 mbar (0.315 psi) due to the hydrostatic column in the temperature isolator. You can correct this zero point shift at the device.

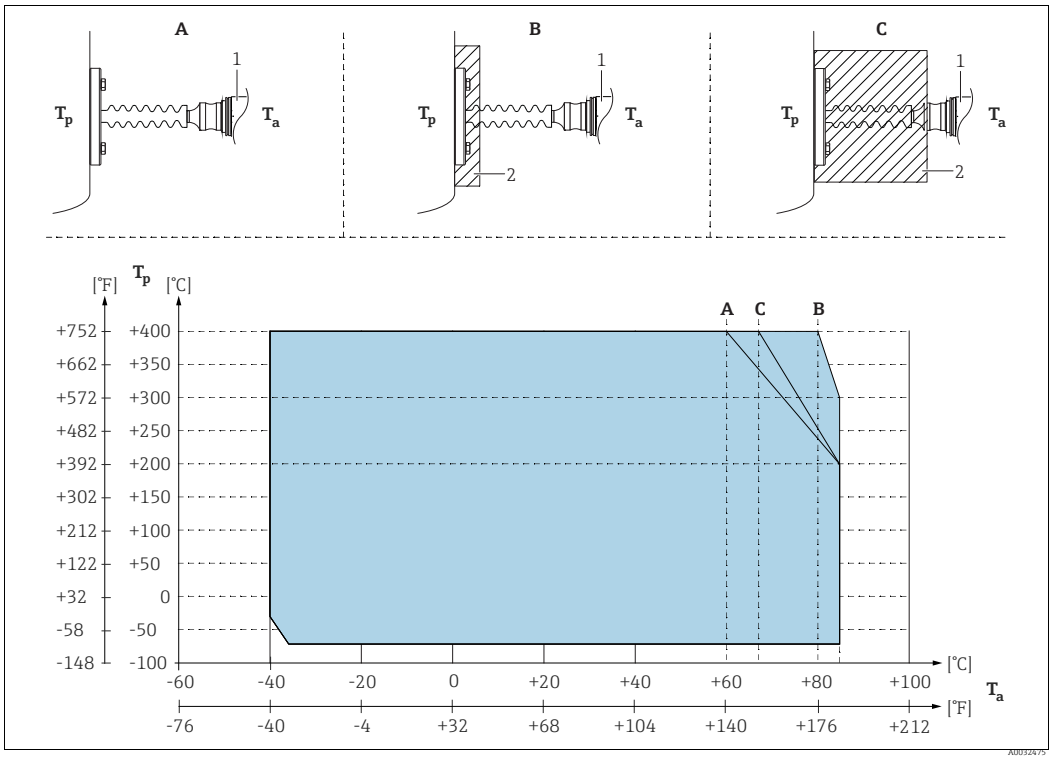

Fig. 12:

1 Transmitter
2 Insulation material

Position	Insulation	Ambient temperature (T_a) at transmitter	Maximum process temperature (T_p)
A	No insulation	60 °C (140 °F)	400 °C (752 °F) [1]
		85 °C (185 °F)	200 °C (392 °F)
B	30 mm (1.18 in) Insulation	80 °C (176 °F)	400 °C (752 °F) [1]
		85 °C (185 °F)	300 °C (572 °F)
C	Maximum insulation	67 °C (153 °F)	400 °C (752 °F) [1]
		85 °C (185 °F)	200 °C (392 °F)

1) Process temperature: max. 400 °C (752 °F), depending on the diaphragm seal filling oil used

4.4.3 Seal for flange mounting

NOTICE

Corrupted measurement results.

The seal is not allowed to press against the process isolating diaphragm as this could affect the measurement result.

▶ Ensure that the seal is not touching the process isolating diaphragm.

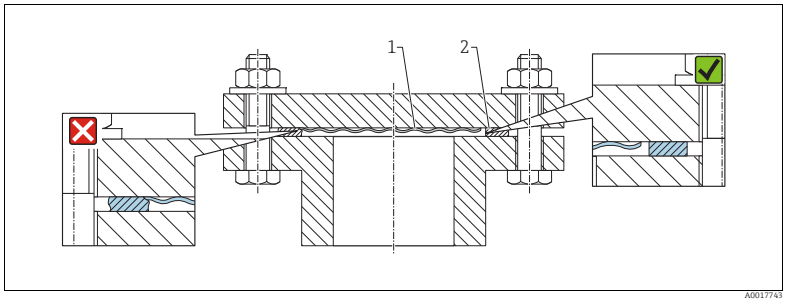

Fig. 13:
1 Process isolating diaphragm
2 Seal

4.4.4 Installation with heat insulation – PMC71 high temperature version and PMP75

The devices must only be insulated up to a certain height. The maximum permitted insulation height is labelled on the devices and applies to an insulation material with a specific heat conductivity and to the maximum permitted ambient and process temperature (see following table). The data were determined under the most critical application "quiescent air".

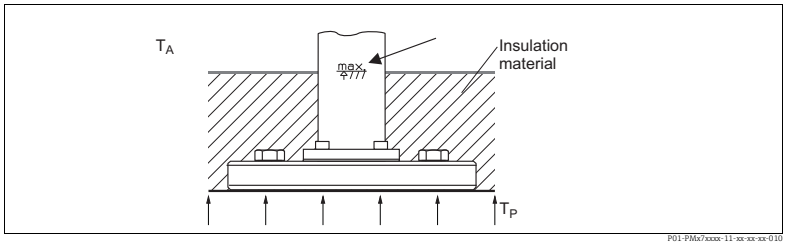

Fig. 14: Maximum insulation height, here e.g. PMC71 with flange

	PMC71	PMP75
Ambient temperature (T_A)	≤ 70°C (158°F)	≤ 70°C (158°F)
Process temperature (T_P)	≤ 150°C (302°F)	≤ 400°C (752°F) [1)]
Heat conductivity Insulation material	≤ 0,04 W/(m x K)	

1) Depending on the diaphragm seal filling oil used (see Technical Information TI00383P Cerabar S)

4.4.5 Wall and pipe mounting (optional)

Endress+Hauser offers a mounting bracket for installation on pipes or walls (for pipe diameters from 1 ¼" to 2").

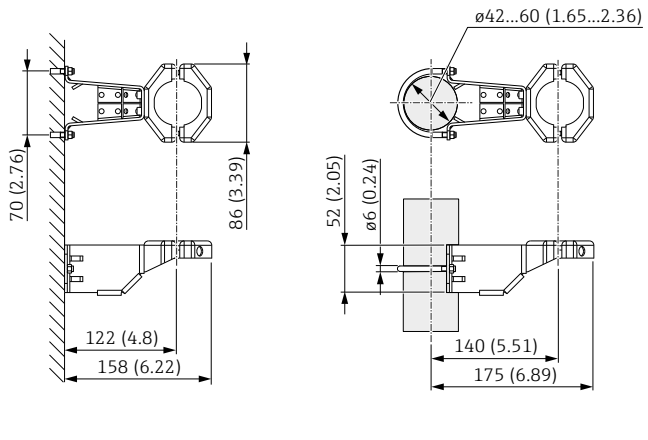

Engineering unit mm (in)

Please note the following when mounting:
- Devices with capillary tubes: mount capillaries with a bending radius ≥ 100 mm (3.94 in).
- When mounting on a pipe, tighten the nuts on the bracket uniformly with a torque of at least 5 Nm (3.69 lbs ft).

4.4.6 Assembling and mounting the "separate housing" version

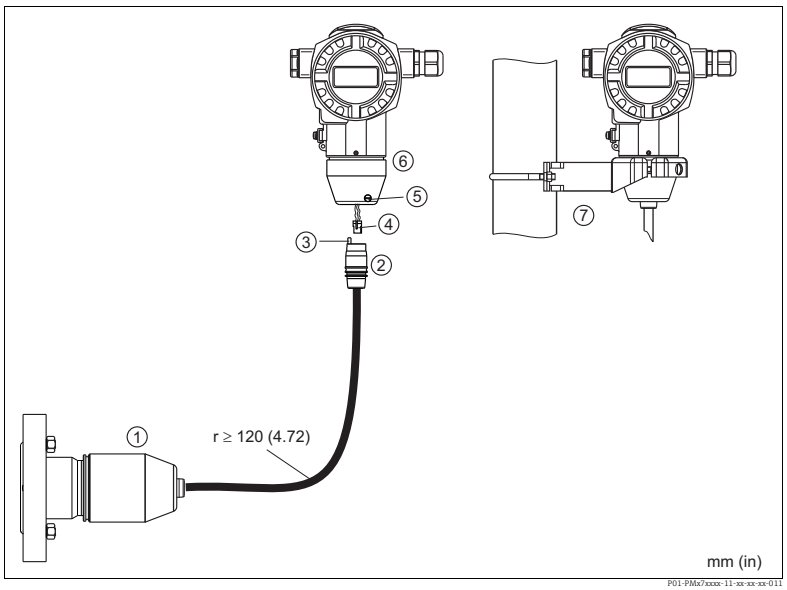

Fig. 15: "Separate housing" version

1 In the "separate housing" version, the sensor is supplied with process connection and cable fitted.
2 Cable with connection jack
3 Pressure compensation
4 Plug
5 Locking screw
6 Housing fitted with housing adapter, included
7 Mounting bracket suitable for wall and pipe mounting, included

Assembly and mounting

1. Connect plug (item 4) into the corresponding connection jack of the cable (item 2).
2. Plug the cable into the housing adapter (item 6).
3. Tighten the locking screw (item 5).
4. Mount the housing on a wall or pipe using the mounting bracket (item 7). When mounting on a pipe, tighten the nuts on the bracket uniformly with a torque of at least 5 Nm (3.69 lbf ft).
   Mount the cable with a bending radius (r) ≥ 120 mm (4.72 in).

4.4.7 PMP71, version prepared for diaphragm seal mount

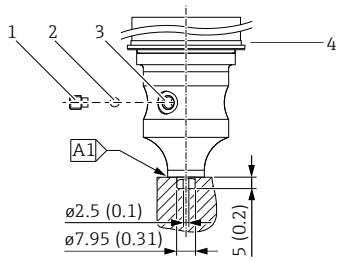

Fig. 16: Version U1: prepared for diaphragm seal mount

1 Setscrew
2 Bearing
3 Hole for fill fluid
4 Anti-twist protection
A1 See the "Welding recommendation" table below

Engineering unit mm (in)

With variant "U1", the anti-twist protection (4) of the housing is not mounted at the factory and is included. The anti-twist protection (4) must be mounted after the diaphragm seal has been fitted.

Welding recommendation
Endress+Hauser recommends welding on the diaphragm seal as follows for the "XSJ - Prepared for diaphragm seal mount" version in feature 110 "Process connections" in the order code up to, and including, 40 bar (600 psi) sensors: the total welding depth of the fillet weld is 1 mm (0.04 in) with an outer diameter of 16 mm (0.63 in). Welding is performed according to the WIG method.

Consecutive seam no.	Sketch/welding groove shape, dimension as per DIN 8551	Base material matching	Welding method DIN EN ISO 24063	Welding position	Inert gas, additives
A1 for sensors ≤ 40 bar (600 psi)	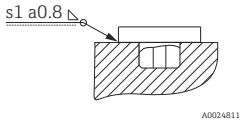	Adapter made of AISI 316L (1.4435) to be welded to diaphragm seal made of AISI 316L (1.4435 or 1.4404)	141	PB	Inert gas Ar/H 95/5 Additive: ER 316L Si (1.4430)

Information on filling

The diaphragm seal must be filled as soon as it has been welded on.
- After welded into the process connection, the sensor assembly must be properly filled with a filling oil and sealed gas-tight with a sealing ball and lock screw.
  Once the diaphragm seal has been filled, at the zero point the device display should not exceed 10% of the full scale value of the cell measuring range. The internal pressure of the diaphragm seal must be corrected accordingly.
- Adjustment / calibration:
  – The device is operational once it has been fully assembled.
  – Perform a reset. The device must then be calibrated to the process measuring range as described in the Operating Instructions.

4.4.8 Rotating the housing

The housing can be rotated up to 380° by loosening the Allen screw.

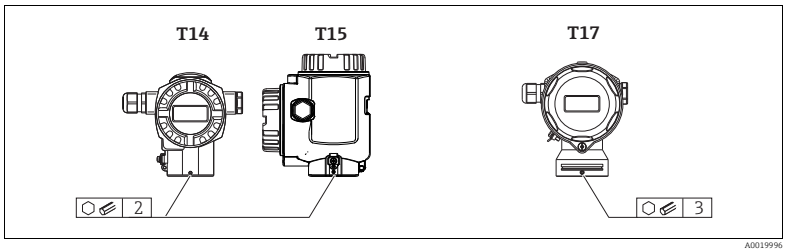

1. T14 and T15 housing: Loosen setscrew with a 2 mm (0.08 in) Allen key.
   T17 housing: Loosen setscrew with a 3 mm (0.12 in) Allen key.
2. Rotate housing (max. up to 380 °).
3. Retighten setscrew with 1 Nm (0,74 lbf ft.

4.4.9 Closing the housing cover

NOTICE

Devices with EPDM cover seal - transmitter leakiness!

Mineral-based, animal-based or vegetable-based lubricants cause the EPDM cover seal to swell and the transmitter to become leaky.

- The thread is coated at the factory and therefore does not require any lubrication.

NOTICE

The housing cover can no longer be closed.

Damaged thread!

- When closing the housing cover, please ensure that the thread of the cover and housing are free from dirt, e.g. sand.If you feel any resistance when closing the cover, check the thread on both again to ensure that they are free from dirt.

Close cover on a hygenic stainless steel housing (T17)

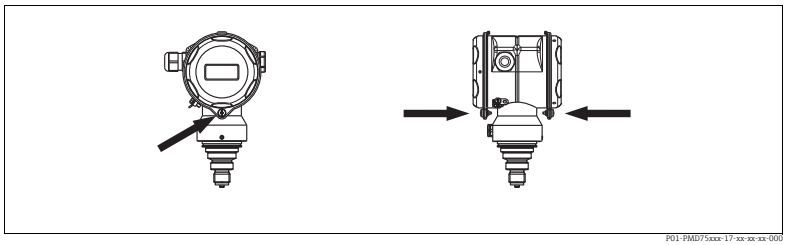

Fig. 17: Close cover

The covers for the terminal and electronics compartment are hooked into the casing and closed with a screw. These screws should be finger-tightened (2 Nm (1.48 lbf ft)) to the stop to ensure that the covers sit tightly.

4.5 Post-installation check

After installing the device, carry out the following checks:
- Are all screws firmly tightened?
- Are the housing covers screwed down tight?

5 Wiring

5.1 Connecting the device

⚠ WARNING

Risk of electric shock!

If the operating voltage is > 35 VDC: Dangerous contact voltage at terminals.

▶ In a wet environment, do not open the cover if voltage is present.

⚠ WARNING

Limitation of electrical safety due to incorrect connection!

- Risk of electric shock and/or explosion in hazardous areas! In a wet environment, do not open the cover if voltage is present.
- When using the measuring device in hazardous areas, installation must comply with the corresponding national standards and regulations and the Safety Instructions or Installation or Control Drawings.
- Devices with integrated overvoltage protection must be earthed.
- Protective circuits against reverse polarity, HF influences and overvoltage peaks are installed.
- The supply voltage must match the supply voltage on the nameplate (→ 📄 10, "Nameplate").
- Switch off the supply voltage before connecting the device.
- Remove housing cover of the terminal compartment.
- Guide cable through the gland. Preferably use twisted, screened two-wire cable.
- Connect device in accordance with the following diagram.
- Screw down housing cover.
- Switch on supply voltage.

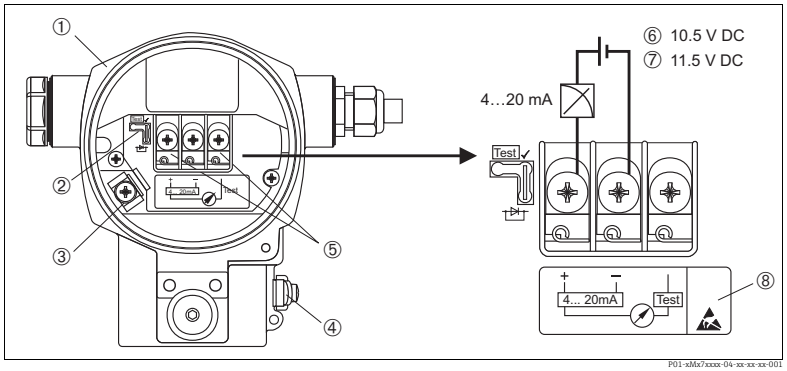

Fig. 18: Electrical connection 4 to 20 mA HART. Observe also → 📄28, "Supply voltage".

1 *Housing*
2 *Jumper for 4 to 20 mA test signal.*
→ 📄28, "Taking 4 to 20 mA test signal" part.
3 *Internal earth terminal*
4 *External earth terminal*
5 *4 to 20 mA test signal between plus and test terminal*
6 *Minimum supply voltage = 10.5 V DC, jumper is inserted in accordance with the illustration.*
7 *Minimum supply voltage = 11.5 V DC, jumper is inserted in "Test" position.*
8 *Devices with integrated overvoltage protection are labelled OVP (overvoltage protection) here.*

5.1.1 Connecting devices with Harting plug Han7D

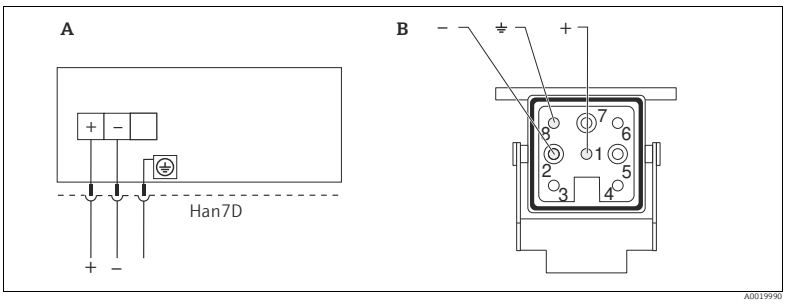

Fig. 19:

A Electrical connection for devices with Harting plug Han7D
B View of the plug connector at the device

5.1.2 Connecting devices with an M12 connector

PIN assignment for M12 connector	PIN	Meaning
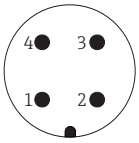	1	Signal +
	2	Not assigned
	3	Signal –
	4	Earth

5.1.3 Connecting the cable version

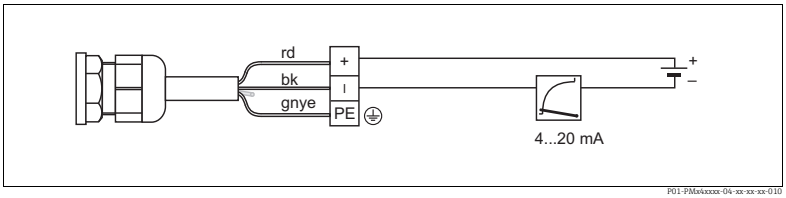

Fig. 20: rd = red, bk = black, gnye = green-yellow

5.2 Connecting the measuring unit

5.2.1 Supply voltage

⚠ WARNING

Supply voltage might be connected!

Risk of electric shock and/or explosion!

- ▶ When using the measuring device in hazardous areas, installation must comply with the corresponding national standards and regulations and the Safety Instructions or Installation or Control Drawings.
- ▶ All explosion protection data are given in separate documentation which is available upon request. The Ex documentation is supplied as standard with all devices approved for use in explosion hazardous areas.

Electronic version	Jumper for 4 to 20 mA test signal in "Test" position (Delivery status)	Jumper for 4 to 20 mA test signal in "Non-Test" position
4 to 20 mA HART, for non-hazardous areas	11.5 to 45 V DC	10.5 to 45 V DC

Taking 4 to 20 mA test signal

A 4 to 20 mA signal may be measured via the positive and test terminal without interrupting the measurement. The minimum supply voltage of the device can be reduced by simply changing the position of the jumper. As a result, operation is also possible with lower voltage sources. To keep the measured error below 0.1 %, the current measuring device should display an internal resistance of < 0.7 Ω. Observe the position of the jumper in accordance with the following table.

Jumper position for test signal	Description
	– Taking 4 to 20 mA test signal via plus and test terminal: possible. (Thus, the output current can be measured without interruption via the diode.) – Delivery status – Minimum supply voltage: 11.5 V DC
	– Taking 4 to 20 mA test signal via plus and test terminal: not possible. – Minimum supply voltage: 10.5 V DC

5.2.2 Terminals

- Supply voltage and internal ground terminal: 0.5 to 2.5 mm^2 (20 to 14 AWG)
- External ground terminal: 0.5 to 4 mm^2 (20 to 12 AWG)

5.2.3 Cable specification

- Endress+Hauser recommends using twisted, screened two-wire cables.
- Cable external diameter: 5 to 9 mm (0.2 to 0.35 in)

5.2.4 Load

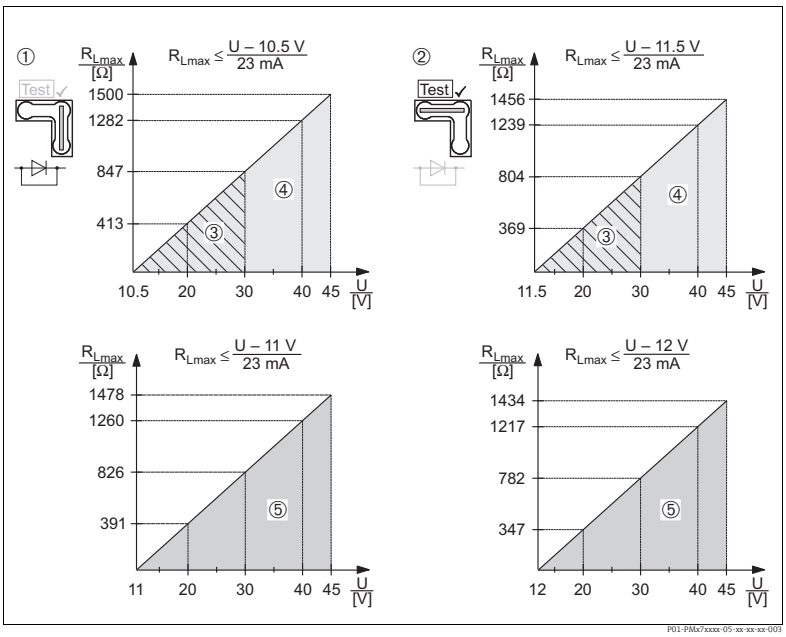

Fig. 21: Load diagram, observe the position of the jumper and the explosion protection. (→ 28, "Taking 4 to 20 mA test signal" part.)

1 Jumper for the 4 to 20 mA test signal inserted in "Non-Test" position
2 Jumper for the 4 to 20 mA test signal inserted in "Test" position
3 Supply voltage 10.5 (11.5) to 30 V DC for 1/2 G, 1 GD, 1/2 GD, FM IS , CSA IS, IECEx ia, NEPSI Ex ia
4 Supply voltage10.5 (11.5) to 45 V DC for devices for non-hazardous areas, 1/2 D, 1/3 D, 2 G Ex d, 3 G Ex nA, FM XP, FM DIP, FM NI, CSA XP and CSA Dust-Ex, NEPSI Ex d
5 Supply voltage 11 (12) to 45 V DC for PMC71, Ex d[ia], NEPSI Ex d[ia]
R_{Lmax} Maximum load resistance
U Supply voltage

When operating via a handheld terminal or via PC with an operating program, a minimum communication resistance of 250 Ω must exist within the loop.

5.2.5 Screening/potential matching

- You achieve optimum screening against disturbances if the screening is connected on both sides (in the cabinet and on the device). If you have to reckon with potential equalisation currents in the plant, only earth screening on one side, preferably at the transmitter.
- When using in hazardous areas, you must observe the applicable regulations. Separate Ex documentation with additional technical data and instructions is included with all Ex systems as standard.

5.2.6 Connecting Field Xpert SFX100

Compact, flexible and robust industry handheld terminal for remote parametrization and measured value inspection via the HART current output (4-20mA).
For details refer to Operating Instructions BA00060S/04/EN.

5.2.7 Connecting Commubox FXA195

The Commubox FXA195 connects intrinsically safe transmitters with the HART protocol to a computer's USB port. This allows remote operation of the transmitter using Endress+Hauser's FieldCare operating program. Power is supplied to the Commubox through the USB port. The Commubox is also suitable for connection to intrinsically safe circuits. → See Technical Information TI00404F for further information.

5.2.8 Connecting Commubox FXA291/ToF Adapter FXA291 for operation via FieldCare

Connecting Commubox FXA291

The Commubox FXA291 connects Endress+Hauser field instruments with CDI interface (= Endress+Hauser Common Data Interface) to the USB interface of a personal computer or a notebook. For details refer to TI00405C/07/en.

For the following Endress+Hauser instruments you need the "ToF Adapter FXA291" as an additional accessory:

- Cerabar S PMC71, PMP7x
- Deltabar S PMD7x, FMD7x
- Deltapilot S FMB70

Connecting ToF Adapter FXA291

The ToF Adapter FXA291 connects the Commubox FXA291 via the USB interface of a personal computer or a notebook to the following Endress+Hauser instruments:

- Cerabar S PMC71, PMP7x
- Deltabar S PMD7x, FMD7x
- Deltapilot S FMB70

For details refer to KA0271F/00/a2.

5.3 Potential matching

Ex applications: Connect all devices to the local potential matching.
Observe the applicable regulations.

5.4 Overvoltage protection (optional)

NOTICE

Device could be destroyed!
Devices with integrated overvoltage protection must be earthed.

Devices showing version "M" in feature 100 "Additional options 1" or feature 110 "Additional options 2" in the order code are equipped with overvoltage protection (see also Technical Information TI00383P "Ordering information".

- Overvoltage protection:
  - Nominal functioning DC voltage: 600 V
  - Nominal discharge current: 10 kA
- Surge current check î = 20 kA as per DIN EN 60079-14: 8/20 µs satisfied
- Arrester AC current check I = 10 A satisfied

5.5 Post-connection check

Perform the following checks after completing electrical installation of the device:
- Does the supply voltage match the specifications on the nameplate?
- Is the device properly connected (→ 26)?
- Are all screws firmly tightened?
- Are the housing covers screwed down tight?

As soon as voltage is applied to the device, the green LED on the electronic insert lights up for a few seconds or the connected on-site display lights up.

6 Operation

Feature 20 "Output; operation" in the order code provides you with information on the operating options available to you.

6.1 On-site display (optional)

A 4-line liquid crystal display (LCD) is used for display and operation.
The on-site display shows measured values, dialog texts, fault messages and notice messages.
The display of the device can be turned in 90° steps. Depending on the installation position of the device, this makes it easy to operate the device and read the measured values.

Functions:
- 8-digit measured value display including sign and decimal point, bargraph for current display
- Simple and complete menu guidance thanks to separation of the parameters into several levels and groups
- Each parameter is given a 3-digit ID number for easy navigation
- Option for configuring the display according to individual requirements and desires, such as language, alternating display, contrast setting, display of other measured values such as sensor temperature
- Comprehensive diagnostic functions (fault and warning message, peak-hold indicators, etc.)
- Rapid and safe commissioning with the Quick Setup menus

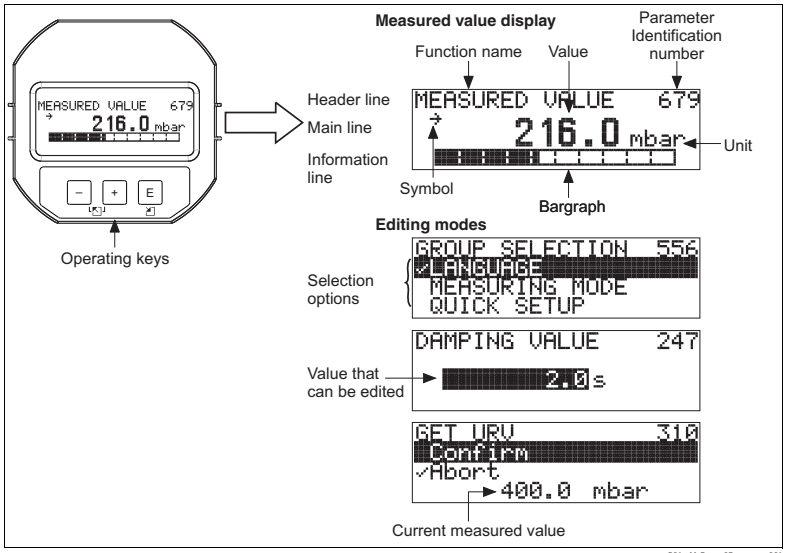

The following table illustrates the symbols that can appear on the on-site display. Four symbols can occur at one time.

Symbol	Meaning
	Alarm symbol – Symbol flashing: warning, device continues measuring. – Symbol permanently lit: error, device does not continue measuring. *Note:* The alarm symbol may overlie the tendency symbol.
	Lock symbol The operation of the device is locked. Unlock device, → 🗎 44.
	Communication symbol Data transfer via communication. *Note:* The alarm symbol may overlie the communication symbol.
	Tendency symbol (increasing) The measured value is increasing.
	Tendency symbol (decreasing) The measured value is decreasing.
	Tendency symbol (constant) The measured value has remained constant over the past few minutes.

6.2 Operating elements

6.2.1 Position of operating elements

With regard to aluminium or stainless steel housings (T14), the operating keys are located either outside the device under the protection cap or inside on the electronic insert. In hygenic stainless steel housings (T17), the operating keys are always located inside on the electronic insert.

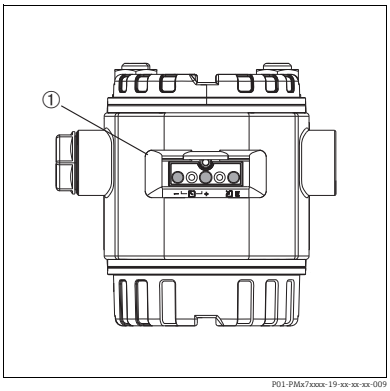

Fig. 22: Operating keys, external

1 Operating keys on the exterior of the device under the protective flap

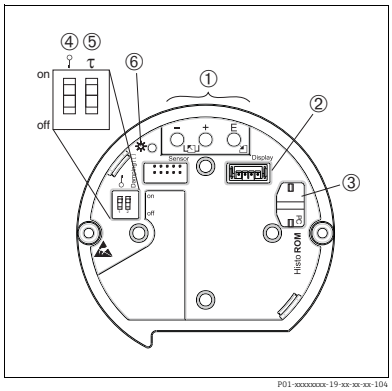

Fig. 23: Operating keys, internal

1 Operating keys
2 Slot for optional display
3 Slot for optional HistoROM®/M-DAT
4 DIP-switch for locking/unlocking measured-value-relevant parameters
5 DIP-switch for damping on/off
6 Green LED to indicate value being accepted

6.2.2 Function of the operating elements – on-site display not connected

Press and hold the key or the key combination for at least 3 seconds to execute the corresponding function. Press the key combination for at least 6 seconds for a reset.

Operating key(s)	Meaning
−	Adopt lower range value. A reference pressure is present at the device. See also → 35, "Pressure measuring mode" or → 36, "Level measuring mode".
+	Adopt upper range value. A reference pressure is present at the device. See also → 35, "Pressure measuring mode" or → 36, "Level measuring mode".
E	Position adjustment
+ and − and E	Reset all parameters. The reset via operating keys corresponds to the software reset code 7864.
+ and E	Copy the configuration data from the optional HistoROM®/M-DAT module to the device.
− and E	Copy the configuration data from the device to the optional HistoROM®/M-DAT module.
on 1 2 off P01-xxxxxxxx-19-xx-xx-xx-057	– DIP-switch 1: for locking/unlocking measured-value-relevant parameters Factory setting: off (unlocked) – DIP-switch 2: damping on/off, Factory setting: on (damping on)

6.2.3 Function of the operating elements – on-site display connected

Operating key(s)	Meaning
+	– Navigate upwards in the picklist – Edit the numerical values and characters within a function
−	– Navigate downwards in the picklist – Edit the numerical values and characters within a function
E	– Confirm entry – Jump to the next item
+ and E	Contrast setting of on-site display: darker
− and E	Contrast setting of on-site display: brighter
+ and −	ESC functions: – Exit edit mode without saving the changed value. – You are in a menu within a function group. The first time you press the keys simultaneously, you go back a parameter within the function group. Each time you press the keys simultaneously after that, you go up a level in the menu. – You are in a menu at a selection level. Each time you press the keys simultaneously, you go up a level in the menu. *Note:* The terms function group, level and selection level are explained in → 38, "General structure of the operating menu".

6.3 On-site operation – on-site display not connected

To operate the device with a HistoROM®/M-DAT module see → 41, "HistoROM®/M-DAT (optional)".

6.3.1 Pressure measuring mode

If no on-site display is connected, the following functions are possible by means of the three keys on the electronic insert or on the exterior of the device:
- Position adjustment (zero point correction)
- Setting lower range value and upper range value
- Device reset, → 34, "Function of the operating elements – on-site display not connected".

- The operation must be unlocked. → 44, "Locking/unlocking operation".
- The device is configured for the Pressure measuring mode as standard. You can switch measuring modes by means of the MEASURING MODE parameter. → 47, "Selecting language and measuring mode".
- The pressure applied must be within the nominal pressure limits of the sensor. See information on the nameplate.

⚠ WARNING
Changing the measuring mode can affect the adjustment data!
This situation can result in product overflow.
▶ Check calibration data when the measuring mode is changed.

Carry out position adjustment.[1]		Setting lower range value.		Setting upper range value.	
Pressure is present at device.		Desired pressure for lower range value is present at device.		Desired pressure for upper range value is present at device.	
↓		↓		↓	
Press E-key for 3 s.		Press ⊟-key for 3 s.		Press ⊞-key for 3 s.	
↓		↓		↓	
Does the LED on the electronic insert light up briefly?		Does the LED on the electronic insert light up briefly?		Does the LED on the electronic insert light up briefly?	
Yes	No	Yes	No	Yes	No
↓	↓	↓	↓	↓	↓
Applied pressure for position adjustment has been accepted.	Applied pressure for position adjustment has not been accepted. Observe the input limits.	Applied pressure for lower range value has been accepted.	Applied pressure for lower range value has not been accepted. Observe the input limits.	Applied pressure for upper range value has been accepted.	Applied pressure for upper range value has not been accepted. Observe the input limits.

1) Observe "Warning", → 47, "Commissioning".

6.3.2 Level measuring mode

If no on-site display is connected, the following functions are possible by means of the three keys on the electronic insert or on the exterior of the device:

- Position adjustment (zero point correction)
- Assign the lower and upper pressure value to the lower and upper level value
- Device reset, → 34, "Function of the operating elements – on-site display not connected".

- The "-" and ⊞- keys only have a function in the following cases:
  - LEVEL SELECTION "Level Easy Pressure", CALIBRATION MODE "Wet"
  - LEVEL SELECTION "Level Standard", LEVEL MODE "Linear", CALIBRATION MODE "Wet"

  The keys have no function in other settings.
- The device is configured for the Pressure measuring mode as standard. You can switch measuring modes by means of the MEASURING MODE parameter. → 47, "Selecting language and measuring mode".

  The following parameters are set to the following values in the factory:
  - LEVEL SELECTION: Level Easy Pressure
  - CALIBRATION MODE: Wet
  - OUTPUT UNIT or LIN. MEASURAND: %
  - EMPTY CALIB.: 0.0
  - FULL CALIB.: 100.0.
  - SET LRV: 0.0 (corresponds to 4 mA value)
  - SET URV: 100.0 (corresponds to 20 mA value)

  These parameters can only be modified by means of the on-site display or remote operation such as the FieldCare.
- The operation must be unlocked. → 44, "Locking/unlocking operation".
- The pressure applied must be within the nominal pressure limits of the sensor. See information on the nameplate.
- See also → 50, "Level measurement". For parameter description see Operating Instructions BA00274P.
- LEVEL SELECTION, CALIBRATION MODE, LEVEL MODE, EMPTY CALIB., FULL CALIB, SET LRV and SET URV are parameter names used for on-site display or remote operation such as FieldCare, for instance.

⚠ WARNING

Changing the measuring mode can affect the adjustment data!

This situation can result in product overflow.

▶ Check calibration data when the measuring mode is changed.

Carry out position adjustment.[1]		**Setting lower pressure value.**		**Setting upper pressure value.**	
Pressure is present at device.		Desired pressure for lower pressure value (EMPTY PRESSURE[2]) is present at device.		Desired pressure for upper pressure value (FULL PRESSURE[1]) is present at device.	
↓		↓		↓	
Press E-key for 3 s.		Press ⊟-key for 3 s.		Press ⊞-key for 3 s.	
↓		↓		↓	
Does the LED on the electronic insert light up briefly?		Does the LED on the electronic insert light up briefly?		Does the LED on the electronic insert light up briefly?	
Yes	No	Yes	No	Yes	No
↓	↓	↓	↓	↓	↓
Applied pressure for position adjustment has been accepted.	Applied pressure for position adjustment has not been accepted. Observe the input limits.	The pressure present was saved as the lower pressure value (EMPTY PRESSURE[2]) and assigned to the lower level value (EMPTY CALIB.[2]).	The pressure present was not saved as the lower pressure value. Observe the input limits.	The pressure present was saved as the upper pressure value (FULL PRESSURE[2]) and assigned to the upper level value (FULL CALIB.[2]).	The pressure present was not saved as the upper pressure value. Observe the input limits.

1) Observe "Warning", → 47, "Commissioning".

2) Parameter name used for the on-site display or remote operation such as the FieldCare.

6.4 On-site operation – on-site display connected

If the on-site display is connected, the three operating keys are used to navigate through the operating menu and parameter input, → 34, "Function of the operating elements – on-site display connected".

6.4.1 General structure of the operating menu

The menu is split into four levels. The three upper levels are used to navigate while you use the bottom level to enter numerical values, select options and save settings.
The entire operating menu is shown in the operating instructions BA00274P "Cerabar S/ Deltabar S/Deltapilot S, Description of Instrument Functions".
The structure of the OPERATING MENU depends on the measuring mode selected, e.g. if the "Pressure" measuring mode is selected, only the functions necessary for this mode are displayed.

6.4.2 Selecting an option

Example: select "English" as the language of the menu.

On-site display	Operation
 P01-xxxxxxxx-19-xx-xx-xx-017	German is selected as the language. A ✔ in front of the menu text indicates the active option.
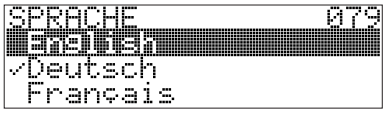 P01-xxxxxxxx-19-xx-xx-xx-033	Select English with ⊞ or ⊟.
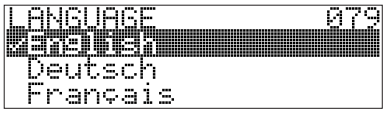 P01-xxxxxxxx-19-xx-xx-xx-034	1. Confirm your choice with Ⓔ. A ✔ in front of the menu text indicates the active option. (English is now selected as the menu language.) 2. Jump to the next item with Ⓔ.

6.4.3 Editing a value

Example: adjusting DAMPING VALUE function from 2.0 s to 30.0 s.
→ 34, "Function of the operating elements – on-site display connected".

On-site display	Operation
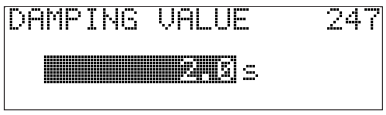	The on-site display shows the parameter to be changed. The value highlighted in black can be changed. The "s" unit is fixed and cannot be changed.
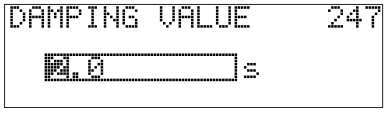	1. Press ⊞ or ⊟ to get to the editing mode. 2. The first digit is highlighted in black.
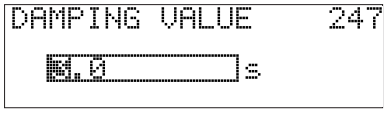	1. Use ⊞ to change "2" to "3". 2. Confirm "3" with Ⓔ. The cursor jumps to the next position (highlighted in black).
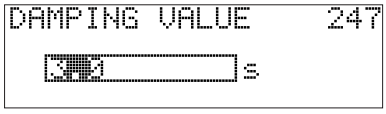	The decimal point is highlighted in black, i.e. you can now edit it.
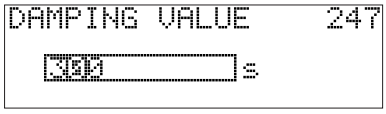	1. Keep pressing ⊞ or ⊟ until "0" is displayed. 2. Confirm "0" with Ⓔ. The cursor jumps to the next position. ↵ is displayed and is highlighted in black. → See next graphic.
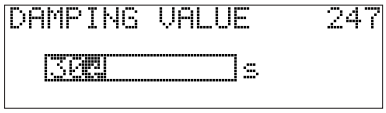	Use Ⓔ to save the new value and exit the editing mode. See next graphic.
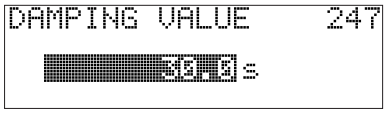	The new value for the damping is now 30.0 s. – Jump to the next parameter with Ⓔ. – You can get back to the editing mode with ⊞ or ⊟.

6.4.4 Taking pressure applied at device as value

Example: configuring upper range value – assign 20 mA to the pressure value 400 mbar (6 psi).

On-site display	Operation
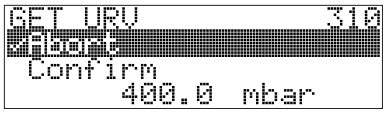 P01-xxxxxxxx-19-xx-xx-xx-035	The bottom line on the on-site display displays the pressure present, here 400 mbar (6 psi).
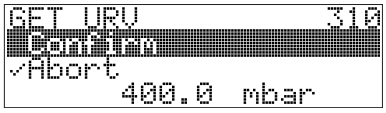 P01-xxxxxxxx-19-xx-xx-xx-036	Use ⊞ or ⊟ to switch to the "Confirm" option. The active selection is highlighted in black.
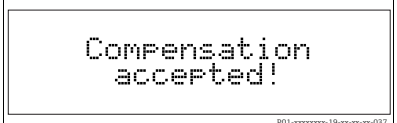 P01-xxxxxxxx-19-xx-xx-xx-037	Use Ⓔ to assign the value (400 mbar (6 psi)) to the GET URV parameter. The device confirms the calibration and jumps back to the parameter, here GET URV (see next graphic).
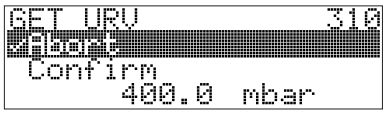 P01-xxxxxxxx-19-xx-xx-xx-035	Switch to the next parameter with Ⓔ.

6.5 HistoROM®/M-DAT (optional)

NOTICE

Device could be destroyed!
Detach HistoROM®/M-DAT from the electronic insert or attach it to the insert in a deenergised state only.

HistoROM®/M-DAT is a memory module, which is attached to the electronic insert and fulfils the following functions:
- Back-up copy of configuration data
- Copying configuration data of a transmitter into another transmitter
- Cyclic recording of pressure and sensor-temperature measured values
- Recording diverse events, such as alarms, configuration changes, counters for measuring range undershooting and exceeding for pressure and temperature, exceeding and undershooting the user limits for pressure and temperature, etc.

- The HistoROM®/M-DAT module may be retrofitted at any time (Order No.: 52027785).
- The HistoROM data and the data in the device are analysed once a HistoROM®/M-DAT is attached to the electronic insert and power is reestablished to the device. During the analysis, the messages "W702, HistoROM data not consistent" and "W706, Configuration in HistoROM and device not identical" can occur. For measures, → 55, "Messages."

6.5.1 Copying configuration data

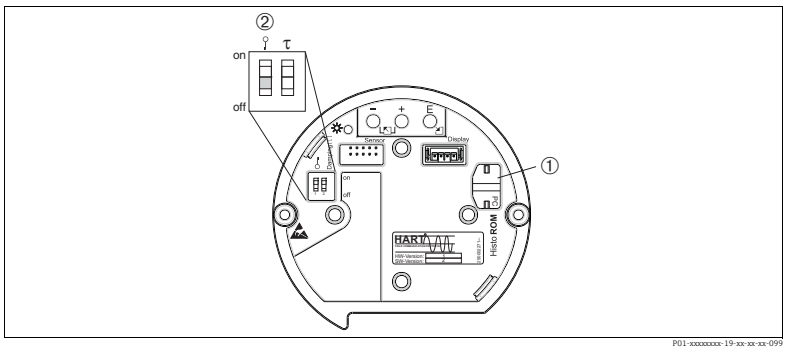

Abb. 24: Electronic insert with optional HistoROM®/M-DAT memory module

1 Optional HistoROM®/M-DAT
2 To copy configuration data from the HistoROM®/M-DAT module to a device or from a device to a HistoROM®/M-DAT, the operation must be unlocked DIP-switch 1, Position "off" ,parameter INSERT PIN NO. = 100).
Observe → 44, "Locking/unlocking operation".

On-site operation – on-site display not connected

Copying configuration data from a device to a HistoROM®/M-DAT module:
The operation must be unlocked.

1. Disconnect device from supply voltage.
2. Attach the HistoROM®/M-DAT module to the electronic insert.
3. Reestablish supply voltage to the device.
4. Press E and "-"-keys (for at least 3 seconds) until the LED on the electronic insert lights up.
5. Wait approx. 20 seconds. Configuration data are loaded from the device to the HistoROM®/M-DAT. The device is not restarted.
6. Before removing the HistoROM®/M-DAT again from the electronic insert, disconnect the device from supply voltage.

Copying configuration data from a HistoROM®/M-DAT to a device:
The operation must be unlocked.

1. Disconnect device from supply voltage.
2. Attach the HistoROM®/M-DAT module to the electronic insert. Configuration data from another device are stored in the HistoROM®/M-DAT.
3. Reestablish supply voltage to the device.
4. Press E und +-keys (for at least 3 seconds) until the LED on the electronic insert lights up.
5. Wait approx. 20 seconds. All parameters except DEVICE SERIAL No, DEVICE DESIGN., CUST. TAG NUMBER, LONG TAG NUMBER, DESCRIPTION, BUS ADDRESS, CURRENT MODE and the parameters in the POSITION ADJUSTMENT and PROCESS CONNECTION group are loaded into the device by HistoROM®/M-DAT. The device is restarted.
6. Before removing the HistoROM®/M-DAT again from the electronic insert, disconnect the device from supply voltage.

On-site operation via on-site display (optional) or remote operation

Copying configuration data from a device to a HistoROM®/M-DAT:
The operation must be unlocked.

1. Disconnect device from supply voltage.
2. Attach the HistoROM®/M-DAT module to the electronic insert.
3. Reestablish supply voltage to the device.
4. Using the HistoROM CONTROL parameter select the option "Device → HistoROM" as the data transfer direction (Menu path: GROUPSELECTION → OPERATING MENU → OPERATION).
   The DOWNLOAD SELECT. parameter setting has no influence on an upload from the device into HistoROM.
5. Wait approx. 20 seconds. Configuration data are loaded from the device to the HistoROM®/M-DAT. The device is not restarted.
6. Before removing the HistoROM®/M-DAT again from the electronic insert, disconnect the device from supply voltage.

Copying configuration data from a HistoROM®/M-DAT to a device:
The operation must be unlocked.

1. Disconnect device from supply voltage.
2. Attach the HistoROM®/M-DAT module to the electronic insert. Configuration data from another device are stored in the HistoROM®/M-DAT.
3. Reestablish supply voltage to the device.
4. Use the DOWNLOAD SELECT parameter to select which parameters are to be overwritten (Menu path: (GROUPS SELECTION →) OPERATING MENU → OPERATION).

   The following parameters are overwritten according to the selection:
   - **Configuration copy (factory setting):**
     all parameters except DEVICE SERIAL No., DEVICE DESIGN, CUST. TAG NUMBER, LONG TAG NUMBER, DESCRIPTION, BUS ADDRESS, CURRENT MODE and the parameters in the POSITION ADJUSTMENT, PROCESS CONNECTION, CURR. TRIM (SERVICE /SYSTEM 2), SENSOR TRIM and SENSOR DATA group.
   - **Device replacement:**
     all parameters except DEVICE SERIAL No., DEVICE DESIGN and the parameters in the POSITION ADJUSTMENT, PROCESS CONNECTION, CURR. TRIM (SERVICE/SYSTEM 2), SENSOR TRIM and SENSOR DATA group.
   - **Electronics replace**:
     all parameters except the parameters in the CURR. TRIM (SERVICE/SYSTEM 2) and SENSOR DATA group.

   Factory setting: Configuration copy
5. Using the HistoROM CONTROL parameter select the option "HistoROM → Device" as the data transfer direction.
   (Menu path: GROUP SELECTION → OPERATING MENU → OPERATION)
6. Wait approx. 20 seconds. Configuration data are loaded from the device to the HistoROM®/M-DAT. The device is restarted.
7. Before removing the HistoROM®/M-DAT again from the electronic insert, disconnect the device from supply voltage.

6.6 Operation via SFX100

Compact, flexible and robust industry handheld terminal for remote parametrization and measured value inspection via the HART current output (4-20mA).
For details refer to Operating Instructions BA00060S/04/EN.

6.7 Endress+Hauser operating program

The operating program FieldCare is an Endress+Hauser Plant Asset Management Tool based on FDT technology. You can use FieldCare to configure all your Endress+Hauser devices, as well as devices from other manufacturers that support the FDT standard. Hardware and software requirements you can find on the www.endress.com → select your country → Search: FieldCare → FieldCare → Technical Data.

FieldCare supports the following functions:
- Configuration of transmitters in online operation
- Loading and saving device data (upload/download)
- Tank linearization
- HistoROM®/M-DAT analysis
- Documentation of the measuring point

Connection options:
- HART via Fieldgate FXA520
- HART via Commubox FXA195 and USB interface of a computer
- Commubox FXA291 with ToF Adapter FXA291 via service interface

- See also → 30, "Connecting Commubox FXA195".
- In the "Level Standard" measuring mode, the configuration data that were loaded with FDT upload cannot be written again (FDT download). These data are only used to document the measuring point.
- Further information on the FieldCare can be found on the Internet: http://www.endress.com → Download → Text Search: FieldCare.

6.8 Locking/unlocking operation

Once you have entered all the parameters, you can lock your entries against unauthorised and undesired access.

You have the following possibilities for locking/unlocking the operation:
- Via a DIP-switch on the electronic insert, locally on the display.
- Via the on-site display (optional)
- Via digital communication.

The -symbol on the on-site display indicates that operation is locked. Parameters which refer to how the display appears, e.g. LANGUAGE and DISPLAY CONTRAST can still be altered.

If operation is locked by means of the DIP-switch, you can only unlock operation again by means of the DIP-switch. If operation is locked by means of the on-site display or remote operation e.g. FieldCare, you can only unlock operation again by means of the on-site display or remote operation.

The table provides an overview of the locking functions:

Locking via	View/read parameter	Modify/write via[1]		Unlocking via		
		On-site display	Remote operation	DIP-switch	On-site display	Remote operation
DIP-switch	Yes	No	No	Yes	No	No
On-site display	Yes	No	No	No	Yes	Yes
Remote operation	Yes	No	No	No	Yes	Yes

1) Parameters which refer to how the display appears, e.g. LANGUAGE and DISPLAY CONTRAST can still be altered.

6.8.1 Locking/unlocking operation locally via DIP-switch

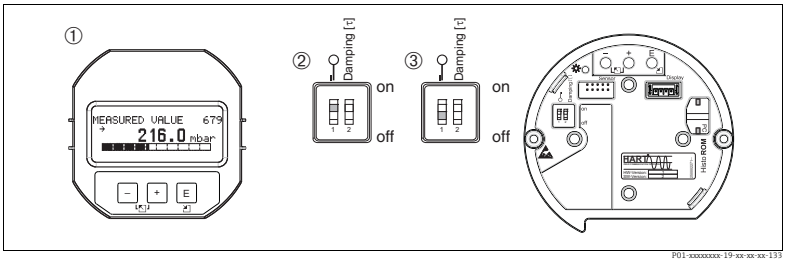

Fig. 25: DIP-switch position "Hardware locking" on the electronic insert

1 If necessary, remove on-site display (optional)
2 DIP-switch is at "on": operation is locked.
3 DIP-switch is at "off": operation is unlocked (operation possible)

6.8.2 Locking/unlocking operation via on-site display or remote operation

	Description
Locking operation	1. Select INSERT PIN NO. parameter, Menu path: OPERATING MENU → OPERATION → INSERT PIN NO. 2. To lock operation, enter a number for this parameter between 0 to 9999 that is ≠100.
Unlocking operation	1. Select INSERT PIN NO. parameter. 2. To unlock operation, enter "100" for the parameter.

6.9 Factory setting (reset)

By entering a certain code, you can completely, or partially, reset the entries for the parameters to the factory settings. (For factory settings refer to the Operating Instructions BA00274P "Cerabar S/Deltabar S/Deltapilot S, Description of device functions".) Enter the code by means of the ENTER RESET CODE parameter (Menu path: (GROUP SELECTION →) OPERATING MENU → OPERATING).
There are various reset codes for the device. The following table illustrates which parameters are reset by the particular reset codes. Operation must be unlocked to reset parameters (→ 44, "Locking/unlocking operation").

Any customer-specific configuration carried out by the factory is not affected by a reset (customer-specific configuration remains). If, after a reset, you wish the parameters to be reset to the factory settings, please contact Endress+Hauser Service.

Reset code	Description and effect
1846	**Display reset** – This reset resets all parameters which have to do with how the display appears (DISPLAY group). – Any simulation which may be running is ended. – The device is restarted.
62	**PowerUp reset (warm start)** – This reset resets all the parameters in the RAM. Data are read back anew from the EEPROM (processor is initialised again). – Any simulation which may be running is ended. – The device is restarted.
2710	**Measuring mode level reset** – Depending on the settings for the LEVEL MODE, LIN MEASURAND, LINdMEASURAND or COMB. MEASURAND parameters, the parameters needed for this measuring task will be reset. – Any simulation which may be running is ended. – The device is restarted. Example LEVEL MODE = linear and LIN. MEASURAND = Height ▪ HEIGHT UNIT = m ▪ CALIBRATION MODE = wet ▪ EMPTY CALIB. = 0 ▪ FULL CALIB. = Sensor end value converted to mH_2O, e.g. 4.079 mH_2O for a 400 mbar (6 psi) sensor

333	**User reset**
	– Affects the following parameters:
	  – Function group POSITION ADJUSTMENT
	  – Function group BASIC SETUP, except for the customer-specific units
	  – Function group EXTENDED SETUP
	  – Group OUTPUT
	  – Function group HART DATA: CURRENT MODE, BUS ADDRESS and PREAMBLE NUMBER
	– Any simulation which may be running is ended.
	– The device is restarted.

7864	**Total reset**
	– Affects the following parameters:
	  – Function group POSITION ADJUSTMENT
	  – Function group BASIC SETUP
	  – Function group EXTENDED SETUP
	  – Function group LINEARISATION (an existing linearisation table is erased)
	  – Group OUTPUT
	  – Function group PEAK HOLD INDICATOR
	  – Function group HART DATA
	  – All configurable messages ("Error" type) are set to factory setting. → 55, "Messages" and → 63, "Response of outputs to errors".
	  – Function group USER LIMITS
	  – Function group SYSTEM 2
	– Any simulation which may be running is ended.
	– The device is restarted.

8888	**HistoROM reset** The measured value memory and event memory are cleared. During the reset, the HistoROM must be attached to the electronic insert.

7 Commissioning

The device is configured for the Pressure measuring mode as standard. The measuring range and the unit in which the measured value is transmitted correspond to the specifications on the nameplate.

⚠ WARNING

Exceeding the maximum allowable working pressure!

Risk of injury due to bursting of parts! Warning messages are generated if pressure is too high.

- ▶ If a pressure greater than the maximum permitted pressure is present at the device, the messages "E115 Sensor overpressure" and "E727 Sensor pressure error - overrange" are output in succession! Use the device only within the sensor range limits

NOTICE

Shortfall of the allowable working pressure!

Output of messages if pressure is too low.

- ▶ If a pressure smaller than the minimum permitted pressure is present at the device, the messages "E120 Sensor low pressure" and "E727 Sensor pressure error - overrange" are output in succession! Use the device only within the sensor range limits

7.1 Configuring messages

- Messages E727, E115 and E120 are "Error"-type messages and can be configured as a "Warning" or an "Alarm". These messages are configured as "Warning" messages at the factory. This setting prevents the current output from assuming the set alarm current value for applications (e.g. cascade measurement) where the user is consciously aware of the fact that the sensor range can be exceeded
- We recommend setting messages E727, E115 and E120 to "Alarm" in the following instances:
  - The sensor range does not have to be exceeded for the measuring application.
  - Position adjustment has to be carried out that has to correct a large measured error as a result of the orientation of the device (e.g. devices with a diaphragm seal).

7.2 Function check

Carry out a post-installation and a post-connection check as per the checklist before commissioning the device.

- "Post-installation check" checklist, → 25.
- "Post-connection check" checklist, → 30.

7.3 Selecting language and measuring mode

7.3.1 On-site operation

The LANGUAGE and MEASURING MODE parameters are located on the top menu level.

The following measuring modes are available:
- Pressure
- Level

7.3.2 Digital communication

The following measuring modes are available:
- Pressure
- Level

The LANGUAGE parameter is arranged in the DISPLAY group (OPERATING MENU → DISPLAY).

- Use the LANGUAGE parameter to select the menu language for the on-site display.
- Select the menu language for FieldCare by means of the "Language Button" in the configuration window. Select the menu language for the FieldCare frame via the "Extra" menu → "Options" → "Display" → "Language".

7.4 Position adjustment

Due to the orientation of the device, there may be a shift in the measured value, i.e. when the container is empty, the measured value parameter does not display zero. There are three options to choose from when performing position adjustment. (Menu path: (GROUP SELECTION →) OPERATING MENU → SETTINGS → POSITION ADJUSTMENT)

Parameter name	Description
POS. ZERO ADJUST (685) Entry	Position adjustment – the pressure difference between zero (set point) and the measured pressure need not be known. **Example:** – MEASURED VALUE = 2.2 mbar (0.032 psi) – Correct the MEASURED VALUE via the POS. ZERO ADJUST parameter with the "Confirm" option. This means that you are assigning the value 0.0 to the pressure present. – MEASURED VALUE (after pos. zero adjust) = 0.0 mbar – The current value is also corrected. The CALIB. OFFSET parameter displays the resulting pressure difference (offset) by which the MEASURED VALUE was corrected. **Factory setting:** 0.0
POS. INPUT VALUE (563) Entry	Position adjustment – the pressure difference between zero (set point) and the measured pressure need not be known. To correct the pressure difference, you need a reference measurement value (e. g. from a reference device). **Example:** – MEASURED VALUE = 0.5 mbar (0.0073 psi) – For the POS. INPUT VALUE parameter, specify the desired set point for the MEASURED VALUE, e.g. 2.0 mbar (0.029 psi). ($MEASURED\ VALUE_{new}$ = POS. INPUT VALUE) – MEASURED VALUE (after entry for POS. INPUT VALUE) = 2.0 mbar (0.029 psi) – The CALIB. OFFSET parameter displays the resulting pressure difference (offset) by which the MEASURED VALUE was corrected. CALIB. OFFSET = $MEASURED\ VALUE_{old}$ – POS. INPUT VALUE, here: CALIB. OFFSET = 0.5 mbar (0.0073 psi) – 2.0 mbar (0.029 psi) = – 1.5 mbar (0.022 psi)) – The current value is also corrected. **Factory setting:** 0.0
CALIB. OFFSET (319) Entry	Position adjustment – the pressure difference between zero (set point) and the measured pressure is known. **Example:** – MEASURED VALUE = 2.2 mbar (0.032 psi) – Via the CALIB. OFFSET parameter, enter the value by which the MEASURED VALUE should be corrected. To correct the MEASURED VALUE to 0.0 mbar, you must enter the value 2.2 here. ($MEASURED\ VALUE_{new}$ = $MEASURED\ VALUE_{old}$ – CALIB. OFFSET) – MEASURED VALUE (after entry for calib. offset) = 0.0 mbar – The current value is also corrected. **Factory setting:** 0.0

7.5 Pressure measurement

7.5.1 Information on pressure measurement

- There is a Quick Setup menu for each of the measuring modes Pressure and Level which guides you through the most important basic functions. With the setting in the MEASURING MODE parameter, you specify which Quick Setup menu should be displayed. → 47, "Selecting language and measuring mode".
- For a detailed description of the parameters see the Operating Instructions BA00274P "Cerabar S/Deltabar S/Deltapilot S, Description of device functions"
  - Table 6, POSITION ADJUSTMENT
  - Table 7, BASIC SETUP
  - Table 15, EXTENDED SETUP
- For pressure measurement, select the "Pressure" option by means of the MEASURING MODE parameter. The operating menu is structured appropriately.

WARNING

Changing the measuring mode can affect the adjustment data!

This situation can result in product overflow.

▶ Check calibration data when the measuring mode is changed.

7.5.2 Quick Setup menu for Pressure measuring mode

On-site operation	Digital communication
Measured value display On-site display: Switch from the measured value display to GROUP SELECTION with E.	See BA00274P.
GROUP SELECTION Select MEASURING MODE.	
MEASURING MODE Select "Pressure" option.	
GROUP SELECTION Select QUICK SETUP menu.	
POS. ZERO ADJUST Due to orientation of the device, there may be a shift in the measured value. You correct the MEASURED VALUE via the POS. ZERO ADJUST parameter with the "Confirm" option, i. e. you assign the value 0.0 to the pressure present.	
POS. INPUT VALUE Due to orientation of the device, there may be a shift in the measured value. For the POS. INPUT VALUE parameter, specify the desired set point for the MEASURED VALUE.	
SET LRV Set the measuring range (enter 4 mA value). Specify a pressure value for the lower current value (4 mA value). A reference pressure does not have to be present at the device.	
SET URV Set the measuring range (enter 20 mA value). Specify a pressure value for the upper current value (20 mA value). A reference pressure does not have to be present at the device.	
DAMPING TIME Enter damping time (time constant τ). The damping affects the speed at which all subsequent elements, such as the on-site display, measured value and current output react to a change in the pressure.	

For on-site operation, see also
→ 34, "Function of the operating elements – on-site display connected" and
→ 38, "On-site operation – on-site display connected".

7.6 Level measurement

7.6.1 Information on level measurement

- The Pressure and Level operating modes each have a quick setup menu which guides you through the most important basic functions. → 52, "Quick Setup menu for Level measuring mode".
- Furthermore, the three level modes "Level Easy Pressure", "Level Easy Height" and "Level Standard" are available to you for level measurement. You can select from the "Linear", "Pressure linearized" and "Height linearized" level types for the "Level Standard" level mode. The table in the "Overview of level measurement" section below provides an overview of the various measuring tasks.
  - In the "Level Easy Pressure" and "Level Easy Height" level modes, the values entered are not tested as extensively as in the "Level Standard" level mode. The values entered for EMPTY CALIB./FULL CALIB., EMPTY PRESSURE/FULL PRESSURE, EMPTY HEIGHT/FULL HEIGHT and SET LRV/SET URV must have a minimum interval of 1 % for the "Level Easy Pressure" and "Level Easy Height" level modes. The value will be rejected with a warning message if the values are too close together. Further limit values are not checked; i.e. the values entered must be appropriate for the sensor and the measuring task so that the measuring device can measure correctly.
  - The "Level Easy Pressure" and "Level Easy Height" level modes encompass fewer parameters than the "Level Standard" mode and are used for quick and easy configuration of a level application.
  - Customer-specific units of fill level, volume and mass or a linearization table may only be entered in the "Level Standard" level mode.
  - Where the device is intended for use as a subsystem in a safety function (SIL), a "Device configuration with enhanced parameter security" (SAFETY CONFIRM.) is only possible for the "Level" operating mode in the "Level Easy Pressure" level mode. All parameters previously entered are checked after a password is entered. Once the "Level Easy Height" or "Level Standard" has been selected, the configuration will first have to be reset to the ex-works setting using the RESET parameter (menu path: (GROUP SELECTION →) OPERATING MENU → OPERATION) using the reset code "7864".
    For further information see the Cerabar S (SD00190P) Functional Safety Manual.
- See the Operating Instructions BA00274P "Cerabar S/Deltabar S/Deltapilot S, Description of device functions".

⚠ WARNING

Changing the measuring mode can affect the adjustment data!

This situation can result in product overflow.

▶ Check calibration data when the measuring mode is changed.

7.6.2 Overview of level measurement

Measuring task	LEVEL SELECTION/ LEVEL MODE	Measured variable options	Description	Comment	Measured value display
The measured variable is in direct proportion to the measured pressure. Calibration is performed by entering two pressure-level value pairs.	LEVEL SELECTION: Level Easy Pressure	Via OUTPUT UNIT parameter: %, level, volume or mass units.	– Calibration with reference pressure – wet calibration, see Operating Instructions BA00274P. – Calibration without reference pressure – dry calibration, see Operating Instructions BA00274P.	– Incorrect entries are possible – SIL mode possible – Customised units are not possible	The measured value display and the LEVEL BEFORE LIN parameter show the measured value.
The measured variable is in direct proportion to the measured pressure. Calibration is performed by entering the density and two height-level value pairs.	LEVEL SELECTION: Level Easy Height	Via OUTPUT UNIT parameter: %, level, volume or mass units.	– Calibration with reference pressure – wet calibration, see Operating Instructions BA00274P. – Calibration without reference pressure – dry calibration, see Operating Instructions BA00274P.	– Incorrect entries are possible – SIL mode not possible – Customised units are not possible	The measured value display and the LEVEL BEFORE LIN parameter show the measured value.
The measured variable is in direct proportion to the measured pressure.	LEVEL SELECTION: Level standard/ LEVEL MODE: Linear	Via LIN. MEASURAND parameter: – % (level) – Level – Volume – Mass	– Calibration with reference pressure – wet calibration, see Operating Instructions BA00274P. – Calibration without reference pressure – dry calibration, see Operating Instructions BA00274P.	– Incorrect entries are rejected by the device – SIL mode not possible – Customised level, volume and mass units are possible	The measured value display and the LEVEL BEFORE LIN parameter show the measured value.
The measured variable is not in direct proportion to the measured pressure as, for example, with containers with a conical outlet. A linearisation table must be entered for the calibration.	LEVEL SELECTION: Level standard/ LEVEL MODE: Pressure linearized	Via LINd MEASURAND parameter: – Pressure + % – Pressure + volume – Pressure + mass	– Calibration with reference pressure: semiautomatic entry of linearisation table, see Operating Instructions BA00274P. – Calibration without reference pressure: manual entry of linearisation table, see Operating Instructions BA00274P.	– Incorrect entries are rejected by the device – SIL mode not possible – Customised level, volume and mass units are possible	The measured value display and the TANK CONTENT parameter show the measured value.
– Two measured variables are required or – The container shape is given by value pairs, such as height and volume. The 1st measured variable %-height or height must be in direct proportion to the measured pressure. The 2nd measured variable volume, mass or % must not be in direct proportion to the measured pressure. A linearisation table must be entered for the 2nd measured variable. The 2nd measured variable is assigned to the 1st measured variable by means of this table.	LEVEL SELECTION: Level standard/ LEVEL MODE: Height linearized	Via COMB. MEASURAND parameter: – Height + volume – Height + mass – Height + % – %-Height + volume – %-Height + mass – %-Height + %	– Calibration with reference pressure: wet calibration and semiautomatic entry of linearisation table, see Operating Instructions BA00274P. – Calibration without reference pressure: dry calibration and manual entry of linearisation table, see Operating Instructions BA00274P.	– Incorrect entries are rejected by the device – SIL mode not possible – Customised level, volume and mass units are possible	The measured value display and the TANK CONTENT parameter show the 2nd measured value (volume, mass or %). The LEVEL BEFORE LIN parameter displays the 1st measured value (%-height or height).

7.6.3 Quick Setup menu for Level measuring mode

- Some parameters are only displayed if other parameters are appropriately configured. For example, the EMPTY CALIB. parameter is only displayed in the following cases:
  - LEVEL SELECTION "Level Easy Pressure" and CALIBRATION MODE "Wet"
  - LEVEL SELECTION "Level Standard", LEVEL MODE "Linear" and CALIBRATION MODE "WET"

  You can find the LEVEL MODE parameter in the BASIC SETTINGS function group (menu path: (GROUP SELECTION →) OPERATING MENU → SETTINGS → BASIC SETTINGS).
- The following parameters are set to the following values in the factory:
  - LEVEL SELETION: Level Easy Pressure
  - CALIBRATION MODE: Wet
  - OUTPUT UNIT or LIN. MEASURAND: %
  - EMPTY CALIB.: 0.0
  - FULL CALIB.: 100.0
  - SET LRV (BASIC SETTINGS group): 0.0 (corresponds to 4 mA value)
  - SET URV (BASIC SETTINGS group): 100.0 (corresponds to 20 mA value).
- The quick setup is suitable for simple and quick commissioning. If you wish to make more complex settings, e.g. change the unit from "%" to "m", you will have to calibrate using the BASIC SETTINGS group. See Operating Instructions BA00274P.

⚠ WARNING

Changing the measuring mode can affect the adjustment data!

This situation can result in product overflow.

▶ Check calibration data when the measuring mode is changed.

On-site operation	Digital communication
Measured value display On-site display: Switch from the measured value display to GROUP SELECTION with E.	See BA00274P.
GROUP SELECTION Select MEASURING MODE.	
MEASURING MODE Select "Level" option.	
LEVEL SELECTION Select level mode. For an overview see → 51.	
GROUP SELECTION Select QUICK SETUP menu.	
POS. ZERO ADJUST Due to orientation of the device, there may be a shift in the measured value. You correct the MEASURED VALUE via the POS. ZERO ADJUST parameter with the "Confirm" option, i. e. you assign the value 0.0 to the pressure present.	
POS. INPUT VALUE Due to orientation of the device, there may be a shift in the measured value. For the POS. INPUT VALUE parameter, specify the desired set point for the MEASURED VALUE.	
EMPTY CALIB. [1] (produce appropriate level) Enter level for the lower calibration point. For this parameter, enter a level value which is assigned to the pressure present at the device.	
FULL CALIB. [1] (produce appropriate level) Enter level for the upper calibration point. For this parameter, enter a level value which is assigned to the pressure present at the device.	
DAMPING TIME Enter damping time (time constant τ). The damping affects the speed at which all subsequent elements, such as the on-site display, measured value and current output react to a change in the pressure.	

1) – LEVEL SELECTION "Level Easy Pressure" and CALIBRATION MODE "Wet"
– LEVEL SELECTION "Level Standard", LEVEL MODE "Linear" and CALIBRATION MODE "Wet"

For on-site operation, see also
→ 34, "Function of the operating elements – on-site display connected" and
→ 38, "On-site operation – on-site display connected".

8 Maintenance

Keep the pressure compensation and GORE-TEX® filter (1) free from contaminations and water.

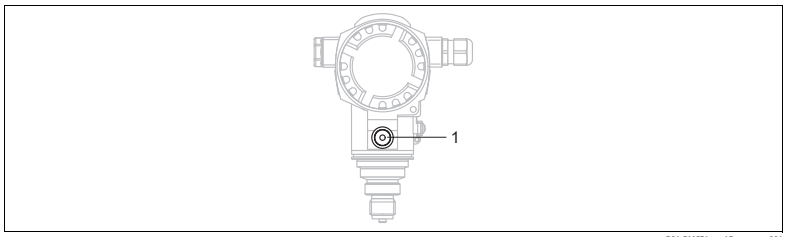

P01-PMC71xxx-17-xx-xx-xx-001

8.1 Cleaning instructions

Endress+Hauser offer flushing rings as accessories to clean process isolating diaphragms without taking the transmitters out of the process.
For further information please contact your local Endress+Hauser Sales Center.

8.1.1 PMP75

We recommend you perform CIP (cleaning in place (hot water)) before SIP (sterilization in place (steam)) for pipe diaphragm seals.
A frequent use of sterilization in place (SIP) will increase the stress on the process isolating diaphragm. Under unfavorable circumstances in the long term view we cannot exclude that a frequent temperature change could lead to a material fatigue of the process isolating diaphragm and possibly to a leakage.

8.2 Exterior cleaning

Please note the following points when cleaning the device:
- The cleaning agents used should not attack the surface and the seals.
- Mechanical damage to the process isolating diaphragm, e.g. due to pointed objects, must be avoided.
- Observe degree of protection. See therefor nameplate if necessary (→ 10).

9 Troubleshooting

9.1 Messages

The following table lists all the possible messages that can occur.
The device differentiates between the error types "Alarm", "Warning" and "Error". You may specify whether the instrument should react as if for an "Alarm" or "Warning" for "Error" messages.
→ See "Error type/NA 64" column and Section 9.2 "Response of outputs to errors".

In addition, the "Error type/NA 64" column classifies the messages in accordance with NAMUR Recommendation NA 64:
- Break down: indicated with "B"
- Maintenance need: indicated with "C" (check request)
- Function check: indicated with "I" (in service)

Error message display on the on-site display:
- The measured value display shows the message with the highest priority. → See "Priority" column.
- The ALARM STATUS parameter shows all the messages present in descending order of priority. You can scroll through all the messages present with the ⊞ key or ⊟ key.

Message display via the digital communication:
The ALARM STATUS parameter shows the message with the highest priority.
See "Priority" column.

- If the device detects a defect in the on-site display during initialization, special error messages are generated. For the error messages → 🗎 63, "On-site display error messages".
- For support and further information, please contact Endress+Hauser Service.
- See also Section "Repair", "Repair of Ex-certified devices" and "Spare Parts".

Code	Error type/ NA 64	Corresponds NE 107	Message/description	Cause	Measure	Priority
101 (A101)	Alarm B	Failure (F)	B>Sensor electronic EEPROM error	– Electromagnetic effects are greater than specifications in the technical data. (→ 🗎 68) This message normally only appears briefly. – Sensor defect.	– Wait a few minutes. – Restart the device. Perform reset (Code 62). – Block off electromagnetic effects or eliminate source of disturbance. – Replace sensor.	17
102 (W102)	Warning C	Maintenance request (M)	C>Checksum error in EEPROM: peakhold segment	– Main electronics defect. Correct measurement can continue as long as you do not need the peak hold indicator function.	– Replace main electronics.	53
106 (W106)	Warning C	Funktion check (C)	C>Downloading - please wait	– Downloading.	– Wait for download to complete.	52
110 (A110)	Alarm B	Failure (F)	B>Checksum error in EEPROM: configuration segment	– The supply voltage is disconnected when writing. – Electromagnetic effects are greater than specifications in the technical data. (→ 🗎 68) – Main electronics defect.	– Reestablish supply voltage. Perform reset (Code 7864) if necessary. Carry out calibration again. – Block off electromagnetic effects or eliminate sources of disturbance. – Replace main electronics.	6
113 (A113)	Alarm B	Failure (F)	B>ROM failure in transmitter electronic	– Main electronics defect.	– Replace main electronics.	1

Code	Error type/ NA 64	Corresponds NE 107	Message/description	Cause	Measure	Priority
115 (E115)	Error B factory setting: Warning C	Out of specification (S)	B>Sensor overpressure	– Overpressure present. – Sensor defect.	– Reduce pressure until message disappears. – Replace sensor.	29
116 (W116)	Warning C	Maintenance request (M)	C>Download error, repeat download	– The file is defect. – During the download, the data are not correctly transmitted to the processor, e.g. because of open cable connections, spikes (ripple) on the supply voltage or electromagnetic effects.	– Use another file. – Check cable connection PC – transmitter. – Block off electromagnetic effects or eliminate sources of disturbance. – Perform reset (Code 7864) and carry out calibration again. – Repeat download.	36
120 (E120)	Error B factory setting: Warning C	Out of specification (S)	B>Sensor low pressure	– Pressure too low. – Sensor defect.	– Increase pressure until message disappears. – Replace sensor.	30
121 (A121)	Alarm B	Failure (F)	B>Checksum error in factory segment of EEPROM	– Main electronics defect.	– Replace main electronics.	5
122 (A122)	Alarm B	Failure (F)	B>Sensor not connected	– Cable connection sensor –main electronics disconnected. – Electromagnetic effects are greater than specifications in the technical data. (→ 68) – Main electronics defect. – Sensor defect.	– Check cable connection and repair if necessary. – Block off electromagnetic effects or eliminate source of disturbance. – Replace main electronics. – Replace sensor.	13
130 (A130)	Alarm B	Failure (F)	B>EEPROM is defect.	– Main electronics defect.	– Replace main electronics.	10
131 (A131)	Alarm B	Failure (F)	B>Checksum error in EEPROM: min/max segment	– Main electronics defect.	– Replace main electronics.	9
132 (A132)	Alarm B	Failure (F)	B>Checksum error in totalizer EEPROM	– Main electronics defect.	– Replace main electronics.	7
133 (A133)	Alarm B	Failure (F)	B>Checksum error in History EEPROM	– An error occurred when writing. – Main electronics defect.	– Perform reset (Code 7864) and carry out calibration again. – Replace electronics.	8
602 (W602)	Warning C	Funktion check (C)	C>Linearisation curve not monoton	– The linearisation table is not monotonic increasing or decreasing.	– Add to linearisation table or perform linearisation again.	57

Code	Error type/ NA 64	Corresponds NE 107	Message/description	Cause	Measure	Priority
604 (W604)	Warning C	Funktion check (C)	C>Linearisation table not valid. Less than 2 points or points too close	– The linearisation table consists of less than 2 points. – At least 2 points in the linearisation table are too close together. A minimum gap of 0.5 % of the distance between two points must be maintained. Spans for the "Pressure linearized" option: HYDR. PRESS MAX. – HYDR. PRESS MIN.; TANK CONTENT MAX. – TANK CONTENT MIN. Spans for the "Height linearized" option: LEVEL MAX – LEVEL MIN; TANK CONTENT MAX. – TANK CONTENT MIN.	– Add to linearisation table. If necessary, perform linearisation again. – Correct linearisation table and accept again.	58
613 (W613)	Warning I	Funktion check (C)	I>Simulation is active	– Simulation is switched on, i.e. the device is not measuring at present.	– Switch off simulation.	60
620 (E620)	Error C Factory setting: Warning C	Out of specification (S)	C>Current output out of range	The current is outside the permitted range 3.8 to 20.5 mA. – The pressure applied is outside the set measuring range (but within the sensor range). – Loose connection at sensor cable	– Check pressure applied, reconfigure measuring range if necessary (See also Operating Instructions BA00274P, or these Operating Instructions) – Perform reset (Code 7864) and carry out calibration again. – Wait a short period of time and tighten the connection, or avoid loose connection.	49
700 (W700)	Warning C	Maintenance request (M)	C>Last configuration not stored	– An error occurred when writing or reading configuration data or the power supply was disconnected. – Main electronics defect.	– Perform reset (Code 7864) and carry out calibration again. – Replace main electronics.	54
701 (W701)	Warning C	Funktion check (C)	C>Measuring chain config. exceeds sensor range	– The calibration carried out would result in the sensor nominal operating range being undershot or overshot.	– Carry out calibration again.	50
702 (W702)	Warning C	Maintenance request (M)	C>HistoROM data not consistent.	– Data were not written correctly to the HistoROM, e.g. if the HistoROM was detached during the writing process. – HistoROM does not have any data.	– Repeat upload. – Perform reset (Code 7864) and carry out calibration again. – Copy suitable data to the HistoROM. (See also → 42, "Copying configuration data".)	55
703 (A703)	Alarm B	Failure (F)	B>Measurement error	– Fault in the main electronics. – Main electronics defect.	– Briefly disconnect device from the power supply. – Replace main electronics.	22
704 (A704)	Alarm B	Funktion check (C)	B>Measurement error	– Fault in the main electronics. – Main electronics defect.	– Briefly disconnect device from the power supply. – Replace main electronics.	12
705 (A705)	Alarm B	Failure (F)	B>Measurement error	– Fault in the main electronics. – Main electronics defect.	– Briefly disconnect device from the power supply. – Replace main electronics.	21

Code	Error type/ NA 64	Corresponds NE 107	Message/description	Cause	Measure	Priority
706 (W706)	Warning C	Maintenance request (M)	C>Configuration in HistoROM and device not identical	– Configuration (parameters) in the HistoROM and in the device is not identical.	– Copy data from the device to the HistoROM. (See also → 42, "Copying configuration data".) – Copy data from the HistoROM to the device. (See also → 42, "Copying configuration data".) The message remains if the HistoROM and the device have different software versions. The message goes out if you copy the data from the device to the HistoROM. – Device reset codes such as 7864 do not have any effect on the HistoROM. That means that if you do a reset, the configurations in the HistoROM and in the device may not be the same.	59
707 (A707)	Alarm B	Funktion check (C)	B>X-VAL. of lin. table out of edit limits.	– At least one X-VALUE in the linearisation table is either below the value for HYDR. PRESS MIN. or MIN. LEVEL or above the value for HYDR. PRESS. MAX. or LEVEL MAX.	– Carry out calibration again. (See also Operating Instructions BA00274P, or these Operating Instructions)	38
710 (W710)	Warning C	Funktion check (C)	B>Set span too small. Not allowed.	– Values for calibration (e.g. lower range value and upper range value) are too close together. – The sensor was replaced and the customer-specific configuration does not suit the sensor. – Unsuitable download carried out.	– Adjust calibration to suit sensor. (See also Operating Instructions BA00274P, parameter description MINIMUM SPAN or these Operating Instructions) – Adjust calibration to suit sensor. – Replace sensor with a suitable sensor. – Check configuration and perform download again.	51
711 (A711)	Alarm B	Funktion check (C)	B>LRV or URV out of edit limits	– Lower range value and/or upper range value undershoot or overshoot the sensor range limits. – The sensor was replaced and the customer-specific configuration does not suit the sensor. – Unsuitable download carried out.	– Reconfigure lower range value and/or upper range value to suit the sensor. Pay attention to position factor. – Reconfigure lower range value and/or upper range value to suit the sensor. Pay attention to position factor. – Replace sensor with a suitable sensor. – Check configuration and perform download again.	37
713 (A713)	Alarm B	Funktion check (C)	B>100% POINT level out of edit limits	– The sensor was replaced.	– Carry out calibration again.	39

Code	Error type/ NA 64	Corresponds NE 107	Message/description	Cause	Measure	Priority
715 (E715)	Error C Factory setting: Warning C	Out of specification (S)	C>Sensor over temperature	– The temperature measured in the sensor is greater than the upper nominal temperature of the sensor. (See also Operating Instructions BA00274P, parameter description Tmax SENSOR or these Operating Instructions) – Unsuitable download carried out.	– Reduce process temperature/ ambient temperature. – Check configuration and perform download again.	32
716 (E716)	Error B Factory setting: Alarm B	Failure (F)	B>Process isolating diaphragm broken	– Sensor defect.	– Replace Sensor. – Reduce pressure.	24
717 (E717)	Error C Factory setting: Warning C	Out of specification (S)	C>Transmitter over temperature	– The temperature measured in the electronics is greater than the upper nominal temperature of the electronics (+88 °C (+190 °F)). – Unsuitable download carried out.	– Reduce ambient temperature. – Check configuration and perform download again.	34
718 (E718)	Error C Factory setting: Warning C	Out of specification (S)	C>Transmitter under temperature	– The temperature measured in the electronics is smaller than the lower nominal temperature of the electronics (−43 °C (-45 °F)). – Unsuitable download carried out.	– Increase ambient temperature. Insulate device if necessary. – Check configuration and perform download again.	35
719 (A719)	Alarm B	Funktion check (C)	B>Y-VAL of lin. table out of edit limits	– At least on Y-VALUE in the linearisation table is below the MIN. TANK CONTANT or above the MAX. TANK CONTENT.	– Carry out calibration again. (See also Operating Instructions BA00274P, or these Operating Instructions)	40
720 (E720)	Error C Factory setting: Warning C	Out of specification (S)	C>Sensor under temperature	– The temperature measured in the sensor is smaller than the lower nominal temperature of the sensor. (See also Operating Instructions BA00274P, parameter description Tmin SENSOR or Operating Instructions) – Unsuitable download carried out. – Loose connection at sensor cable	– Increase process temperature/ ambient temperature. – Check configuration and perform download again. – Wait a short period of time and tighten the connection, or avoid loose connection.	33
721 (A721)	Alarm B	Funktion check (C)	B>ZERO POSITION level out of edit limits	– LEVEL MIN or LEVEL MAX has been changed.	– Perform reset (Code 2710) and carry out calibration again.	41
722 (A722)	Alarm B	Funktion check (C)	B>EMPTY CALIB. or FULL CALIB. out of edit limits	– LEVEL MIN or LEVEL MAX has been changed.	– Perform reset (Code 2710) and carry out calibration again.	42
723 (A723)	Alarm B	Funktion check (C)	B>MAX. FLOW out of edit limits	– FLOW-MEAS. TYPE has been changed.	– Carry out calibration again.	43

Code	Error type/ NA 64	Corresponds NE 107	Message/description	Cause	Measure	Priority
725 (A725)	Alarm B	Failure (F)	B>Sensor connection error, cycle disturbance	– Electromagnetic effects are greater than specifications in the technical data. (→ See Section 10.) – Setscrew loose. – Sensor or main electronics defect.	– Block off electromagnetic effects or eliminate source of disturbance. – Retighten setscrew with 1 Nm (0,74 lbf ft) (see Chap. 4.4.8). – Replace sensor or main electronics.	25
726 (E726)	Error C Factory setting: Alarm C	Out of specification (S)	C>Sensor temperature error - overrange	– Electromagnetic effects are greater than specifications in the technical data. (→ 68) – Process temperature is outside permitted range. – Sensor defect.	– Block off electromagnetic effects or eliminate source of disturbance. – Check temperature present, reduce or increase if necessary. – If the process temperature is within the permitted range, replace sensor.	31
727 (E727)	Error C Factory setting: Warning C	Out of specification (S)	C>Sensor pressure error - overrange	– Electromagnetic effects are greater than specifications in the technical data. (→ 68) – Pressure is outside permitted range. – Sensor defect.	– Block off electromagnetic effects or eliminate source of disturbance. – Check pressure present, reduce or increase if necessary. – If the pressure is within the permitted range, replace sensor.	28
728 (A728)	Alarm B	Failure (F)	B>RAM error	– Fault in the main electronics. – Main electronics defect.	– Briefly disconnect device from the power supply. – Replace main electronics.	2
729 (A729)	Alarm B	Failure (F)	B>RAM error	– Fault in the main electronics. – Main electronics defect.	– Briefly disconnect device from the power supply. – Replace main electronics.	3
730 (E730)	Error C Factory setting: Warning C	Out of specification (S)	C>LRV user limits exceeded	– Pressure measured value has undershot the value specified for the Pmin ALARM WINDOW parameter. – Loose connection at sensor cable	– Check system/pressure measured value. – Change value for Pmin ALARM WINDOW if necessary. (See also Operating Instructions BA00274P, parameter description Pmin ALARM WINDOW or these Operating Instructions) – Wait a short period of time and tighten the connection, or avoid loose connection.	46

Code	Error type/ NA 64	Corresponds NE 107	Message/description	Cause	Measure	Priority
731 (E731)	Error C Factory setting: Warning C	Out of specification (S)	C>URV user limits exceeded	– Pressure measured value has overshot the value specified for the Pmax ALARM WINDOW parameter.	– Check system/pressure measured value. – Change value for Pmax ALARM WINDOW if necessary. (See also Operating Instructions BA00274P, parameter description Pmax ALARM WINDOW or these Operating Instructions)	45
		Out of specification (S)		– Loose connection at sensor cable	– Wait a short period of time and tighten the connection, or avoid loose connection.	
732 (E732)	Error C Factory setting: Warning C		C>LRV Temp. User limits exceeded	– Temperature measured value has undershot the value specified for the Tmin ALARM WINDOW parameter.	– Check system/temperature measured value. – Change value for Tmin ALARM WINDOW if necessary. (See also Operating Instructions BA00274P, parameter description Tmin ALARM WINDOW or these Operating Instructions)	48
733 (E733)	Error C Factory setting: Warning C	Out of specification (S)	C>URV Temp. User limits exceeded	– Temperature measured value has overshot the value specified for the Tmax ALARM WINDOW parameter.	– Check system/temperature measured value. – Change value for Tmax ALARM WINDOW if necessary. (See also Operating Instructions BA00274P, parameter description Tmax ALARM WINDOW or these Operating Instructions)	47
736 (A736)	Alarm B	Failure (F)	B>RAM error	– Fault in the main electronics. – Main electronics defect.	– Briefly disconnect device from the power supply. – Replace main electronics.	4
737 (A737)	Alarm B	Failure (F)	B>Measurement error	– Fault in the main electronics. – Main electronics defect.	– Briefly disconnect device from the power supply. – Replace main electronics.	20
738 (A738)	Alarm B	Failure (F)	B>Measurement error	– Fault in the main electronics. – Main electronics defect.	– Briefly disconnect device from the power supply. – Replace main electronics.	19
739 (A739)	Alarm B	Failure (F)	B>Measurement error	– Fault in the main electronics. – Main electronics defect.	– Briefly disconnect device from the power supply. – Replace main electronics.	23

Code	Error type/ NA 64	Corresponds NE 107	Message/description	Cause	Measure	Priority
740 (E740)	Error C Factory setting: Warning C	Maintenance request (M)	C>Calculation overflow, bad configuration, hardware defect	– Level measuring mode: the measured pressure has undershot the value for HYDR. PRESS. MIN. or overshot the value for HYDR. PRESS MAX. – Level measuring mode: The measured level did not reach the LEVEL MIN value or exceeded the LEVEL MAX value. – Flow measuring mode: the measured pressure has undershot the value for MAX. PRESS FLOW.	– Check configuration and carry out calibration again if necessary. – Select a device with a suitable measuring range. – Check configuration and carry out calibration again if necessary. (See also Operating Instructions BA00274P, parameter description LEVEL MIN. these Operating Instructions) – Check configuration and carry out calibration again if necessary. – Select a device with a suitable measuring range.	27
741 (A741)	Alarm B	Funktion check (C)	B>TANK HEIGHT out of edit limits	– LEVEL MIN or LEVEL MAX has been changed.	– Perform reset (Code 2710) and carry out calibration again.	44
742 (A742)	Alarm B	Failure (F)	B>Sensor connection error (upload)	– Electromagnetic effects are greater than specifications in the technical data. (→ 68) This message normally only appears briefly. – Cable connection sensor –main electronics disconnected. – Sensor defect.	– Wait a few minutes. – Perform reset (Code 7864) and carry out calibration again. – Check cable connection and repair if necessary. – Replace sensor.	18
743 (E743)	Alarm B	Failure (F)	B>Electronic PCB error during initialisation	– This message normally only appears briefly. – Main electronics defect.	– Wait a few minutes. – Restart the device. Perform reset (Code 62). – Replace main electronics.	14
744 (A744)	Alarm B	Failure (F)	B>Main electronic PCB error	– Electromagnetic effects are greater than specifications in the technical data. (→ 68) – Main electronics defect.	– Restart the device. Perform reset (Code 62). – Block off electromagnetic effects or eliminate source of disturbance. – Replace main electronics.	11
745 (W745)	Warning C	Maintenance request (M)	C>Sensor data unknown	– Sensor does not suit the device (electronic sensor nameplate). Device continues measuring.	– Replace sensor with a suitable sensor.	56
746 (W746)	Warning C	Funktion check (C)	C>Sensor connection error - initialising	– Electromagnetic effects are greater than specifications in the technical data. (→ 68) This message normally only appears briefly. – Overpressure or low pressure present.	– Wait a few minutes. – Restart the device. Perform reset (Code 7864). – Block off electromagnetic effects or eliminate source of disturbance. – Reduce or increase pressure.	26
747 (A747)	Alarm B	Failure (F)	B>Sensor software not compatible to electronics	– Sensor does not suit the device (electronic sensor nameplate).	– Replace sensor with a suitable sensor.	16
748 (A748)	Alarm B	Failure (F)	B>Memory failure in signal processor	– Electromagnetic effects are greater than specifications in the technical data. (→ 68) – Main electronics defect.	– Block off electromagnetic effects or eliminate source of disturbance. – Replace main electronics.	15

9.1.1 On-site display error messages

If the device detects a defect in the on-site display during initialization, the following error messages can be displayed:

Message	Measure
Initialization, VU Electr. Defect A110	Exchange on-site display.
Initialization, VU Electr. Defect A114	
Initialization, VU Electr. Defect A281	
Initialization, VU Checksum Err. A110	
Initialization, VU Checksum Err. A112	
Initialization, VU Checksum Err. A171	

9.2 Response of outputs to errors

The device differentiates between the error types Alarm, Warning and Error.
See the following table and → 55, "Messages".

Output	A (Alarm)	W (Warning)	E (Error: Alarm/Warning)
Current output	Assumes the value specified via the OUTPUT FAIL MODE[1)], ALT. CURR. OUTPUT[1] and SET MAX. ALARM[1] parameter. See also the following section "Configuring current output for an alarm".	Device continues measuring.	For this error, you can enter whether the device should react as in the event of an alarm or as in the event of a warning. See corresponding "Alarm" or "Warning" column. (See also Operating Instructions BA00274P, parameter description SELECT ALARM TYPE or these Operating Instructions)
Bargraph (on-site display)	The bargraph adopts the value defined by the OUTPUT FAIL MODE [1] parameter.	The bargraph adopts the value which corresponds to the current value.	See this table, "Alarm" or "Warning" column, depending on selection.
On-site display	– The measured value and message are displayed alternately – Measured value display: ϟ -symbol is permanently displayed. Message display – 3-digit number such as A122 and description	– The measured value and message are displayed alternately – Measured value display: ϟ -symbol flashes. Message display: – 3-digit number such as W613 and description	– The measured value and message are displayed alternately – Measured value display: see corresponding "Alarm" or "Warning" column Message display: – 3-digit number such as E731 and description
Remote operation (digital communication)	In the case of an alarm, the ALARM STATUS[2)] parameter displays a 3-digit number such as 122 for "Sensor not connected".	In the case of a warning, the ALARM STATUS[2] parameter displays a 3-digit number such as 613 for "Simulation is active".	In the case of an error, the ALARM STATUS[2] parameter displays a 3-digit number such as 731 for "URV user limits exceeded".

1) Menu path: (GROUP SELECTION →) OPERATING MENU → OUTPUT

2) Menu path: (GROUP SELECTION →) OPERATING MENU → MESSAGES

9.2.1 Configuring current output for an alarm

You can configure the current output for the event of an alarm by means of the OUTPUT FAIL MODE, ALT. CURR. OUTPUT and SET MAX. ALARM parameters. These parameters are displayed in the OUTPUT group (menu path: (GROUP SELECTION →) OPERATING MENU → OUTPUT).

In the event of an alarm, the current and the bargraph assume the value entered with the OUTPUT FAIL MODE parameter.

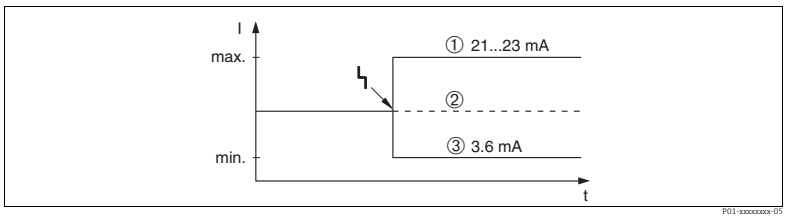

Fig. 26: Current output in the event of an alarm

Options:
1 Max. alarm (110%): can be set between 21 to 23 mA via the SET MAX. ALARM parameter
2 Hold meas. value: last measured value is kept
3 Min. alarm (−10%): 3.6 mA

Factory setting:
- OUTPUT FAIL MODE: Max. Alarm (110%)
- SET MAX. ALARM: 22 mA

Use the ALT. CURR. OUTPUT parameter to set the current output value for the error messages E 120 "Sensor low pressure" and E 115 "Sensor overpressure". You have the following options:
- ▶ Normal/NE43: the current output assumes the value set via the OUTPUT FAIL MODE and SET MAX. ALARM parameters.
- ▶ Special
  - Lower sensor limit undershot (E 120 "Sensor low pressure"): 3.6 mA
  - Upper sensor limit overshot (E 115 "Sensor overpressure") overshot: current output assumes the value set via the SET MAX ALARM parameter.

  Attention : when using the case "special", the behavior is limited to an over/underpressure in a range LRL -10% up to LRL -30% and URL +10% up to URL +30%.

Factory setting:
ALT. CURR. OUTPUT: Normal/NE43

9.3 Confirming messages

Depending on the settings for the ALARM DISPL. TIME and ACK. ALARM MODE parameters, the following measures should be taken to clear a message:

Settings [1]	Measures
– ALARM DISPL. TIME = 0 s – ACK. ALARM MODE = off	– Rectify cause of the message (→ 55).
– ALARM DISPL. TIME > 0 s – ACK. ALARM MODE = off	– Rectify cause of the message (→ 55). – Wait for the alarm display time to elapse.
– ALARM DISPL. TIME = 0 s – ACK. ALARM MODE = on	– Rectify cause of the message (→ 55). – Confirm message using ACK. ALARM parameter.
– ALARM DISPL. TIME > 0 s – ACK. ALARM MODE = on	– Rectify cause of the message (→ 55). – Confirm message using ACK. ALARM parameter. – Wait for the alarm display time to elapse. If a message appears and the alarm display time elapses before the message has been acknowledged, the message will be cleared once it has been acknowledged.

1) Menu path for ALARM DISPL. TIME and ACK. ALARM MODE: (GROUP SELECTION →) OPERATING MENU → DIAGNOSTICS → MESSAGES

If the on-site display displays a message, you can suppress it with the E-key.
If there are several messages, the on-site display shows the message which has the highest priority (→ 55). Once you have suppressed this message using the E-key, the message with the next highest priority is displayed. You can use the E-key to suppress each message, one after the other.
The ALARM STATUS parameter continues to display all the messages present.

9.4 Repair

The Endress+Hauser repairs concept provides for measuring devices to have a modular design and also the customer may carry out repairs (→ 66, "Spare Parts").

- For certified devices, please consult Chapter "Repair of Ex-certified devices".
- For more information on service and spare parts contact the Endress+Hauser Service. See www.endress.com/worldwide.

9.5 Repair of Ex-certified devices

⚠ WARNING

Limitation of electrical safety due to incorrect connection!
Risk of explosion!

When repairing Ex-certified devices, please note the following:
- Only specialist personnel or Endress+Hauser may undertake repairs of certified devices.
- Relevant standards, national hazardous area regulations and Safety Instructions and Certificates must be observed.
- Only genuine Endress+Hauser spare parts may be used.
- When ordering spare parts, please check the device designation on the nameplate. Identical parts may only be used as replacements.
- Electronic inserts or sensors already in use in a standard instrument may not be used as spare parts for a certified device.
- Carry out repairs according to the instructions. After repairs, the device must fulfil the requirements of the specified individual tests.
- A certified device may only be converted into another certified variant by Endress+Hauser.
- All repairs and modifications must be documented.

9.6 Spare Parts

- Some replaceable measuring device components are identified by means of a spare part nameplate. This contains information about the spare part.
- All the spare parts for the measuring device along with the order code are listed In the W@M Device Viewer (www.endress.com/deviceviewer) and can be ordered. If available, users can also download the associated Installation Instructions.

Measuring device serial number:
- Located on the device and spare part nameplate.
- Can be read out via the "DEVICE SERIAL No" parameter in the "TRANSMITTER DATA" submenu.

9.7 Return

The measuring device must be returned if repairs or a factory calibration are required, or if the wrong measuring device has been ordered or delivered. According to legal regulations, Endress+Hauser, as a ISO-certified company, is required to follow certain procedures when handling returned products that are in contact with process fluids.
To ensure swift, safe and professional device returns, please read the return procedures and conditions on the Endress+Hauser website at www.services.endress.com/return-material.

9.8 Disposal

When disposing, separate and recycle the device components based on the materials.

9.9 Software history

Date	Software version	Changes software	Documentation	
			Operating Instructions	Description of Instrument Functions
11.2003	01.00.zz	Original software. Compatible with: – ToF Tool Field Tool Package, version 1.04.00 or higher – Commuwin II version 2.08.-1, Update G or higher – HART Communicator 375 with Device Rev.: 10, DD Rev.: 1	BA271P/00/EN/10.03 52020517	–
06.2004	02.00.zz	– Number of parameters in the Quick Setup menus has been reduced. – On-site operation: LANGUAGE and MEASURING MODE parameters have been moved to the top level. – New SAFETY CONFIRM. group implemented for SIL. → See also SD00190P Safety Manual Cerabar S. – MEASURING MODE "Level", LEVEL MODE "Linear": AREA UNIT and TANK SECTION parameters have been replaced with the TANK VOLUME and TANK HEIGHT parameters. – Function of the UNIT FLOW parameter has been split across four parameters. – Function of the SIMULATED VALUE parameter has been split across six parameters. – SENSOR TRIM and CURRENT TRIM groups have been removed. – Sensor adapt reset, code 1209 and sensor calibration reset, code 2509 have been removed. – Quick Setup menus are available via ToF Tool. Compatible with: – ToF Tool Field Tool Package version 2.00.00 or higher – Commuwin II version 2.08.-1, Update > G – HART Communicator 375/475 with Device Rev.: 20, DD Rev.: 1	BA271P/00/EN/05.04 52022795	BA274P/00/EN/05.04 52021469
06.2005	02.01.zz	– Operating keys also integrated on the optional on-site display. – Chinese and Japanese are available as the menu language on request. Compatible with: – ToF Tool Field Tool Package version 3.00.00 or higher – FieldCare version 2.01.00, DTM Library version 2.06.00, DTM: Deltabar S/MD7x/V02.00 V 1.4.98.74* – HART Communicator 375/475 with Device Rev.: 20, DD Rev.: 1* * Menu languages Chinese and Japanese not selectable	BA271P/00/EN/06.05 71000115 BA271P/00/EN/11.05 71009589	BA274P/00/EN/05.04 52021469 BA274P/00/EN/05.04 52021469

Date	Software version	Changes software	Documentation	
			Operating Instructions	Description of Instrument Functions
06.2006	02.10.zz	– New "Level Easy Pressure" and "Level Easy Height" level modes implemented. New LEVEL SELECTION parameter implemented. – OPERATION group with DOWNLOAD SELECT parameter extended. – SAFETY CONFIRM group extended for the "Level" operating mode in the "Level Easy Pressure" level selection. → See also SD00190P Safety Manual Cerabar S. – Factory setting for the "Error" messages redefined. – Chinese and Japanese included as menu languages by default. Compatible with: – ToF Tool Field Tool Package version 4.0 – FieldCare version 2.02.00 – HART Communicator 375/475 with Device Rev.: 21, DD Rev.: 1	BA271P/00/EN/07.06 71027246	BA274P/00/EN/07.06 71027249
			BA271P/00/EN/08.06 71027246	BA274P/00/EN/07.06 71027249
			BA271P/00/EN/10.07 71043296	BA274P/00/EN/07.07 71061022
			BA271P/00/EN/12.07 71043296	BA274P/00/EN/07.07 71061022
			BA271P/00/EN/05.08 71071770	BA274P/00/EN/05.08 71071855
			BA271P/00/EN/08.08 71077544	BA274P/00/EN/05.08 71071855
			BA271P/00/EN/06.09 71095434	BA274P/00/EN/06.09 71095452
			BA271P/00/EN/05.10 71111792	BA274P/00/EN/05.10 71118244
			BA00271P/00/EN/13.11 71139779	BA00274P/00/EN/13.11 71139795
			BA00271P/00/EN/14.12 71161896	BA00274P/00/EN/13.11 71139795
01.2013	02.11.zz	"Russian" is included as a menu language by default. The menu language "Nederlands" is no longer supported.	BA00271P/00/EN/15.13 71204567	BA00274P/00/EN/14.13 71204628
			BA00271P/00/EN/16.14 71254295	BA00274P/00/EN/15.14 71254474
06.2014	02.20.zz	HART7 protocole revision has been implemented.	BA00271P/00/EN/17.14 71260306	BA00274P/00/EN/16.14 71260321
			BA00271P/00/EN/18.14 71270361	BA00274P/00/EN/17.14 71270402
10.2017	02.30.zz	Improvement of safety confirmation and menues in FieldCare and HART handheld terminal.	BA00271P/00/EN/19.16 71335659	BA00274P/00/EN/18.16 71336359

10 Technical data

For technical data, please refer to TI00383P.

Index

Numerics
4...20 mA test signal . . . 28

A
Alarm messages . . . 55

C
Cable specification . . . 28
Commubox FXA195 anschließen . . . 30
Connecting Commubox FXA291 . . . 30
Connecting ToF Adapter FXA291 . . . 30

D
Designated use . . . 8
Diaphragm seals, installation instructions . . . 17
Diaphragm seals, vacuum application . . . 18
Display . . . 32

E
Electrical connection . . . 26
Error messages . . . 55

F
Factory setting . . . 45
FieldCare . . . 44

H
Hazardous area . . . 9
Heat insulation . . . 20
HistoROM/M-DAT . . . 41

I
Incoming acceptance . . . 13
Installation instructions for devices with diaphragm seals 17
Installation instructions for devices without diaphragm seals . . . 14

L
Language, selection . . . 47
Level measurement . . . 50–51
Level measurement, Quick Setup menu . . . 52
Load . . . 29
Locking operation . . . 44

M
Measuring arrangement for level measurement . . . 17
Measuring arrangement for pressure measurement . 15–16
Measuring mode, selection . . . 47

N
Nameplate . . . 10

O
On-site display . . . 32
Operating elements, function, with on-site display . . . 34
Operating elements, position . . . 33
Operating keys, function, without on-site display . . . 34
Operating keys, position . . . 33
Operating menu . . . 38
Operational safety . . . 8
Overvoltage protection . . . 30

P
Pipe mounting . . . 21
Position adjustment . . . 48
Potential matching . . . 29–30
Pressure measurement . . . 49
Pressure measurement, Quick Setup menu . . . 49
Product safety . . . 9

Q
Quick Setup menu level . . . 52
Quick Setup menu pressure . . . 49

R
Repair . . . 66
Repair of Ex-certified devices . . . 66
Reset . . . 45
Returning devices . . . 66
Rotating the housing . . . 24

S
Scope of delivery . . . 12
Screening . . . 29
Separate housing, assemble and mount . . . 22
Service Interface FXA291 . . . 30
Sicherheitshinweise . . . 8
SIL3 . . . 9
Software history . . . 67
Spare Parts . . . 66
Storage . . . 13
Supply voltage . . . 28

T
Temperature isolator, installation instructions . . . 19
Trouble-shooting . . . 55

U
Unlocking operation . . . 44

W
Wall mounting . . . 21
Warnings . . . 55
Welding recommendation . . . 23
Workplace safety . . . 8

70

71

www.addresses.endress.com

Endress+Hauser
People for Process Automation

TI00383P/00/EN/30.17
71376664

Technical Information
Cerabar S
PMC71, PMP71, PMP75

Process pressure measurement

Pressure transmitter with ceramic and metal sensors

Applications

The device is used for the following measuring tasks:
- Absolute pressure and gauge pressure measurement in gases, steams or liquids in all areas of process engineering and process measurement technology
- Level, volume or mass measurements in liquids
- High process temperatures
  - up to 150 °C (302 °F)without diaphragm seal
  - up to 400 °C (752 °F)with typical diaphragm seals
- High pressures up to 700 bar (10 500 psi)
- MID part certificate according to OIML R117-1 Edition 2007 (E) and EN 12405-1/A1 Edition 2006
- Low-energy version with voltage output (1-5V DC), e.g. for operation on solar-operated control units (Remote Terminal Unit (RTU))

Your benefits

- Very good reproducibility and long-term stability
- High reference accuracy up to ±0.025 %
- Turn down up to 100:1, higher on request
- Used for process pressure monitoring up to SIL 3, certified to IEC 61508 by TÜV SÜD
- High level of safety during operation thanks to function monitoring from the measuring cell to the electronics
- The patented TempC membrane for the diaphragm seal reduces measured errors caused by environmental and process temperature influences to a minimum
- Easy electronic replacement guaranteed with HistoROM®/M-DAT
- Uniform platform for differential pressure, hydrostatics and pressure (Deltabar S – Deltapilot S – Cerabar S)
- Practical user navigation for quick and easy commissioning
- Extensive diagnostic functions

Endress+Hauser
People for Process Automation

Table of contents

Document information 4
Document function 4
Symbols used 4
Documentation 5
Terms and abbreviations 6
Turn down calculation 7
Registered trademarks 7

Function and system design 8
Device selection 8
Measuring principle 10
Product design 11
Applications suitable for custody transfer measurement . . . 12
Communication protocol 12

Input 13
Measured variable 13
Measuring range 13

Output 16
Output Signal 16
Signal range 16
Signal on alarm 16
Load 17
Dead time, time constant 17
Dynamic behavior, current output 18
Dynamic behavior Digital output (HART electronics) 18
Dynamic behavior 1-5V DC 18
Dynamic behavior PROFIBUS PA 19
Dynamic behavior FOUNDATION Fieldbus 19
Damping 20
Alarm current 20
Firmware version 20
HART protocol-specific data 20
PROFIBUS PA protocol-specific data 21
FOUNDATION Fieldbus protocol-specific data 21

Power supply 24
Terminal assignment 24
Supply voltage 25
Current consumption 26
Electrical connection 26
Terminals 26
Cable entries 26
Device plug 26
Cable specification 28
Start-up current 28
Residual ripple 28
Overvoltage protection (optionally for HART, PROFIBUS PA and FOUNDATION Fieldbus) 29
Influence of power supply 29

Performance characteristics of PMP71/PMP75 metal pressure transmitter (Sensor module + Electronic module) 30
Preamble 30
Total performance of transmitter 30
Reference accuracy [E1] 30
Total performance – Specification values 31
Long-term stability 31
Detailed Performance Explanation and Calculation 32
Total error 33

Performance characteristics of PMC71 ceramic pressure transmitter (Sensor module + Electronic module) 34
Preamble 34
Total performance of transmitter 34
Reference accuracy [E1] 34
Total performance – Specification values 35
Long-term stability 35
Detailed Performance Explanation and Calculation 36
Total error 38

Performance characteristics - calculation example and additional information 39
Calculating the total performance in 4 steps 39
Installation factors 42
Reference operating conditions 42

Installation 43
General installation instructions 43
Measuring arrangement for devices without diaphragm seals – PMC71, PMP71 43
Measuring arrangement for devices with diaphragm seals – PMP75 43
Orientation 43
Wall and pipe mounting, transmitter (optional) 44
Wall and pipe mounting, valve manifold (optional) 44
Heat insulation – PMC71 high-temperature version 44
Mounting of PVDF screw-in fittings 45
"Separate housing" version 46
Turning the housing 47
Oxygen applications 48
PWIS-free applications 48
Ultrapure gas applications 48
Applications with hydrogen 48

Environment 49
Ambient temperature range 49
Storage temperature range 49
Degree of protection 49
Climate class 49
Electromagnetic compatibility 49
Vibration resistance 50

Process 51
Process temperature limits 51
Process temperature limits of capillary armoring: PMP75 . . 52
Pressure specifications 53

Mechanical construction 54
Device height 54
T14 housing, optional display on the side 55

T17 housing (hygienic), optional display on the side 56
Process connections for PMC71 with internal process isolating diaphragm 57
Process connections for PMC71 with internal process isolating diaphragm 59
Process connections for PMC71 with internal process isolating diaphragm - height H 59
Process connections for PMC71 with flush-mounted process isolating diaphragm 60
Process connections for PMC71 with flush-mounted process isolating diaphragm 61
Process connections for PMC71 with flush-mounted process isolating diaphragm - height H 61
Process connections for PMC71 with flush-mounted process isolating diaphragm 62
Hygienic process connections for PMC71 with flush-mounted process isolating diaphragm 65
Process connections for PMP71 with internal process isolating diaphragm 67
Process connections for PMP71 with internal process isolating diaphragm 68
Process connections for PMP71 with internal process isolating diaphragm 69
Process connections for PMP71 with flush-mounted process isolating diaphragm 70
Process connections for PMP71 with flush-mounted process isolating diaphragm 72
Process connections for PMP71 with flush-mounted process isolating diaphragm 73
Process connections for PMP71 with flush-mounted process isolating diaphragm 74
Process connections for PMP71 with flush-mounted process isolating diaphragm 75
Process connections for PMP71 76
Process connections for PMP71 76
Valve manifold DA63M- (optional) 77
PMP75 basic device 78
Process connections for PMP75 with flush-mounted process isolating diaphragm 79
Process connections for PMP75 with flush-mounted process isolating diaphragm 80
Process connections for PMP75 with flush-mounted process isolating diaphragm 81
Process connections for PMP75 with flush-mounted process isolating diaphragm 82
Hygienic process connections for PMP75 with flush-mounted process isolating diaphragm 83
Hygienic process connections for PMP75 with flush-mounted process isolating diaphragm 84
Hygienic process connections for PMP75 with flush-mounted process isolating diaphragm 86
Process connections for PMP75 with flush-mounted process isolating diaphragm 89
Process connections for PMP75 with flush-mounted process isolating diaphragm 91
Process connections for PMP75 94
Separate housing: Wall and pipe mounting with mounting bracket 97
Materials not in contact with process 98
Weight 101
Materials in contact with process 101
Fill fluid 103

Operability 104
Operating concept 104
Local operation 104
Remote operation 107
HistoROM®/M-DAT (optional) 109
System integration 109

Planning instructions, diaphragm seal systems . . 110
Applications 110
Design and operation mode 111
Diaphragm seal filling oils 113
Information on cleaning 113
Installation instructions 113
Vacuum applications 116

Certificates and approvals 117
CE mark 117
RoHS 117
RCM-Tick marking 117
Ex approvals 117
EAC conformity 117
Suitable for hygiene applications 117
Functional safety SIL/ IEC 61508 Declaration of Conformity (optional) 118
Overfill protection 118
CRN approval 118
Other standards and guidelines 118
Pressure Equipment Directive 2014/68/EU (PED) 119
Manufacturer declarations 120
Marine approval 120
Drinking water approval 120
Approvals for custody transfer 120
MID Parts Certificate 120
Classification of process sealing between electrical systems and (flammable or combustible) process fluids in accordance with ANSI/ISA 12.27.01 120
Inspection certificate 121
Calibration 121
Service 122

Ordering information 123
Scope of delivery 123
Measuring point (TAG) 123
Configuration data sheet 124

Accessories 126
HistoROM®/M-DAT 126
Welding flanges and welding neck 126
Manifolds 126
Additional mechanical accessories 126

Supplementary documentation 127
Field of Activities 127
Technical Information 127
Special Documentation 127
Operating Instructions 127
Brief Operating Instructions 127
Functional safety manual (SIL) 127
Overfill protection 127
Safety Instructions (XA) 127
Installation/Control Drawings 129

Document information

Document function

The document contains all the technical data on the device and provides an overview of the accessories and other products that can be ordered for the device.

Symbols used

Safety symbols

Symbol	Meaning
DANGER	**DANGER!** This symbol alerts you to a dangerous situation. Failure to avoid this situation will result in serious or fatal injury.
WARNING	**WARNING!** This symbol alerts you to a dangerous situation. Failure to avoid this situation can result in serious or fatal injury.
CAUTION	**CAUTION!** This symbol alerts you to a dangerous situation. Failure to avoid this situation can result in minor or medium injury.
NOTICE	**NOTE!** This symbol contains information on procedures and other facts which do not result in personal injury.

Electrical symbols

Symbol	Meaning	Symbol	Meaning
⏚	**Protective ground connection** A terminal which must be connected to ground prior to establishing any other connections.	⏚	**Ground connection** A grounded terminal which, as far as the operator is concerned, is grounded via a grounding system.

Symbols for certain types of information

Symbol	Meaning
✓	**Permitted** Procedures, processes or actions that are permitted.
✓✓	**Preferred** Procedures, processes or actions that are preferred.
✗	**Forbidden** Procedures, processes or actions that are forbidden.
i	**Tip** Indicates additional information.
	Reference to documentation
	Reference to page
	Reference to graphic
	Visual inspection

Symbols in graphics

Symbol	Meaning
1, 2, 3 ...	Item numbers
1., 2., 3., ...	Series of steps
A, B, C, ...	Views
A-A, B-B, C-C, ...	Sections

Documentation

See chapter "Additional documentation" → 127

The document types listed are available:
In the Download Area of the Endress+Hauser Internet site: www.endress.com → Download

Safety Instructions (XA)

See the "Safety instructions" section → 127

Terms and abbreviations

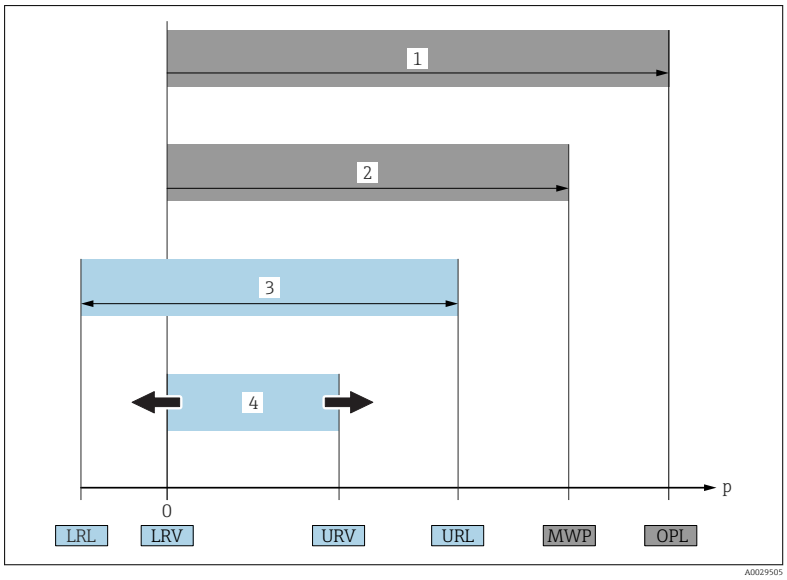

Item	Term/abbreviation	Explanation
1	OPL	The OPL (over pressure limit = sensor overload limit) for the measuring device depends on the lowest-rated element, with regard to pressure, of the selected components, i.e. the process connection has to be taken into consideration in addition to the measuring cell. Also observe pressure-temperature dependency. For the relevant standards and additional information, see the "Pressure specifications"→ 🗎 53 section. The OPL may only be applied for a limited period of time.
2	MWP	The MWP (maximum working pressure) for the sensors depends on the lowest-rated element, with regard to pressure, of the selected components, i.e. the process connection has to be taken into consideration in addition to the measuring cell. Also observe pressure-temperature dependency. For the relevant standards and additional information, see the "Pressure specifications"→ 🗎 53 section. The MWP may be applied at the device for an unlimited period. The MWP can also be found on the nameplate.
3	Maximum sensor measuring range	Span between LRL and URL This sensor measuring range is equivalent to the maximum calibratable/adjustable span.
4	Calibrated/adjusted span	Span between LRV and URV Factory setting: 0 to URL Other calibrated spans can be ordered as customized spans.
p	-	Pressure
-	LRL	Lower range limit
-	URL	Upper range limit
-	LRV	Lower range value
-	URV	Upper range value
-	TD (turn down)	Turn down Example - see the following section.

Turn down calculation

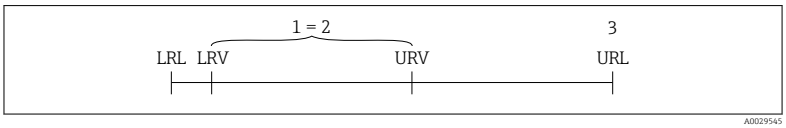

1 Calibrated/adjusted span
2 Zero point-based span
3 URL sensor

Example

- Sensor:10 bar (150 psi)
- Upper range value (URL) = 10 bar (150 psi)

Turn down (TD):

$$TD = \frac{URL}{|URV - LRV|}$$

$$TD = \frac{10\ bar\ (150\ psi)}{|5\ bar\ (75\ psi) - 0\ bar\ (0\ psi)|} = 2$$

In this example, the TD is 2:1.
This span is based on the zero point.

- Calibrated/adjusted span: 0 to 5 bar (0 to 75 psi)
- Lower range value (LRV) = 0 bar (0 psi)
- Upper range value (URV) = 5 bar (75 psi)

Registered trademarks

HART®

Registered trademark of the FieldComm Group, Austin, USA

PROFIBUS®

Registered trademark of the PROFIBUS User Organization, Karlsruhe, Germany

FOUNDATION™Fieldbus

Registered trademark of the FieldComm Group, Austin, Texas, USA

Function and system design

Device selection

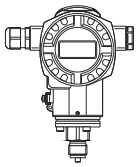

PMC71 with capacitive measuring cell and ceramic process isolating diaphragm (Ceraphire®)

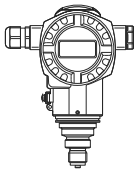

PMP71 with piezoresistive measuring cell and metallic welded process isolating diaphragm

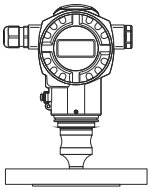

PMP75 with diaphragm seal

Field of application

- Gauge pressure and absolute pressure
- Level

Process connections

PMC71:
- Thread
- EN flanges DN 25 – DN 80
- ANSI flanges 1" – 4"
- JIS flanges 50 A – 100 A

PMP71:
- Thread
- DN 25 – DN 80
- ASME 1 ½" – 4"
- JIS 25 A – 100 A
- Oval flange adapters
- Prepared for diaphragm seal mount

PMP75:
Wide range of diaphragm seals

Measuring ranges

- PMC71: From −100/0 to 100 mbar (−1.5/0 to 1.5 psi) to −1/0 to 40 bar (−15/0 to 600 psi)
- PMP71: From −400/0 to 400 mbar (−6/0 to 6 psi) to −1/0 to 700 bar (−15/0 to 10500 psi)
- PMP75: From −400/0 to 400 mbar (−6/0 to 6 psi) to −1/0 to 400 bar (−15/0 to 6000 psi)

OPL

- PMC71: max. 60 bar (900 psi)
- PMP71: max. 1 050 bar (15 750 psi)
- PMP75: max. 600 bar (9 000 psi)

Process temperature range(temperature at process connection)

- PMC71:–25 to +125 °C (–13 to +257 °F)
  –20 to +150 °C (–4 to +302 °F) (High-temperature version, see Product Configurator "Additional option 1" or 110 "Additional option 2" section, option "T")
- PMP71:–40 to +125 °C (–40 to +257 °F)
- PMP75: –70 to +400 °C (–94 to +752 °F)
  (depending on the filling oil)

Ambient temperature range

- Without LCD display: –40 to +85 °C (–40 to +185 °F) optional (PMP71 and PMP75):
  –50 to +85 °C (–58 to +185 °F) Product Configurator, order code for "Test, certificate" option "JN"
- With LCD display: –20 to +70 °C (–4 to +158 °F)
  (extended temperature application range–50 to +85 °C (–58 to +185 °F) with limitations in optical properties, such as display speed and contrast)
- Separate housing –20 to +60 °C (–4 to +140 °F):
- PMP75: Diaphragm seal systems depending on the version

Reference accuracy

- PMC71: Up to ±0.05% of the set span
  PLATINUM version: up to ±0.025 % of the set span
- PMP71: Up to ±0.05% of the set span
  PLATINUM version: up to ±0.025 % of the set span
- PMP75: Up to ±0.075% of the set span

Supply voltage

Supply voltage non-Ex
- 4 to 20 mA HART: 10.5 to 45 V DC
- 1-5V DC: 9 to 35 V DC
- PROFIBUS PA and FOUNDATION Fieldbus: 9 to 32 V DC

Supply voltage Ex ia
10.5 to 30 V DC

Supply voltage Ex d (1-5V DC)
9 to 35 V DC

Output

- 4 to 20 mA with superimposed HART protocol
- 1-5V DC
- PROFIBUS PA
- FOUNDATION Fieldbus

Options

- Inspection certificate 3.1
- HistoROM®/M-DAT memory chip
- Separate housing
- PMP75: gold-plated process isolating diaphragm
- PMP71, PMP75: gold-rhodium coated process isolating diaphragm
- PMP71, PMP75:NACE-compliant materials

Specialties

- PMC71:
  - Metal-free measurement with PVDF connection
  - Special cleaning of the transmitter to remove paint-wetting substances, for use in paint shops
- PMP71:
  - Process connections with minimum oil volume
  - Gas-tight, elastomer-free
- PMP75:
  - Wide range of diaphragm seals
  - For extreme medium temperatures
  - Process connections with minimum oil volume
  - Completely welded versions

Measuring principle

Devices with ceramic process isolating diaphragm (Ceraphire®)

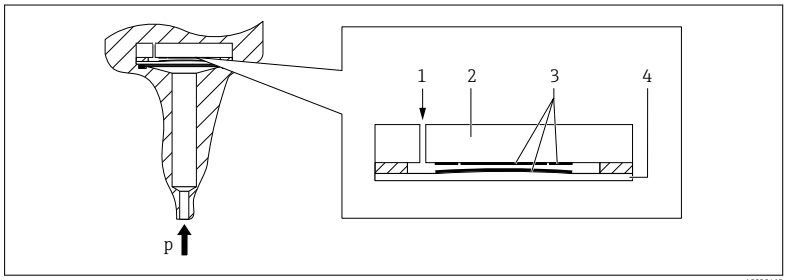

1 *Air pressure (gauge pressure sensors)*
2 *Ceramic substrate*
3 *Electrodes*
4 *Ceramic process isolating diaphragm*

The ceramic sensor is an oil-free sensor, i.e. the process pressure acts directly on the robust ceramic process isolating diaphragm and causes it to deflect. A pressure-dependent change in capacitance is measured at the electrodes of the ceramic substrate and the process isolating diaphragm. The measuring range is determined by the thickness of the ceramic process isolating diaphragm.

Advantages:

- Guaranteed overload resistance up to 40 times the nominal pressure (see "OPL" column in table) → 🗎 13)
- The ultrapure 99.9% ceramic (Ceraphire®, see also "www.endress.com/ceraphire") ensures:
  - Extremely high chemical durability
  - High mechanical durability
- Suitable for vacuums
- Secondary containment for enhanced integrity
- Process temperatures up to 150 °C (302 °F)

Devices with metallic process isolating diaphragm

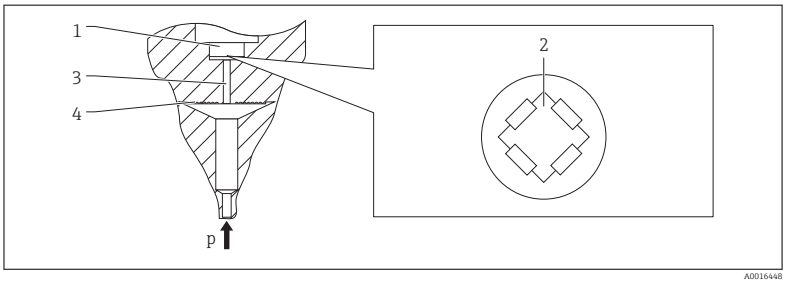

1 Silicon measuring element, substrate
2 Wheatstone bridge
3 Channel with fill fluid
4 Metal process isolating diaphragm

PMP71

The process pressure deflects the metal process isolating diaphragm of the sensor and a fill fluid transfers the pressure to a Wheatstone bridge (semiconductor technology). The pressure-dependent change in the bridge output voltage is measured and evaluated.

Advantages:
- Can be used for process pressures up to 700 bar (10 500 psi)
- High long-term stability
- Guaranteed overload resistance up to 4 times the nominal pressure
- Secondary containment for enhanced integrity
- Significantly reduced thermal effect e.g. compared to diaphragm seal systems with capillaries

PMP75

The operating pressure acts on the process isolating diaphragm of the diaphragm seal and is transferred to the process isolating diaphragm of the sensor by a diaphragm seal fill fluid. The process isolating diaphragm is deflected and a fill fluid transfers the pressure to a resistance measuring bridge. The pressure-dependent change in the bridge output voltage is measured and evaluated.

Advantages:
- Depending on the version, can be used for process pressures up to 400 bar (6 000 psi) and for extreme process temperatures
- High long-term stability
- Guaranteed overload resistance up to 4 times the nominal pressure
- Secondary containment for enhanced integrity

Product design

Level measurement (level, volume and mass):

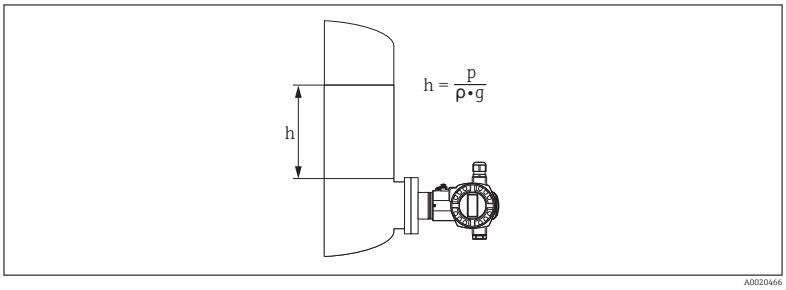

h Height (level)
p Pressure
ρ Density of the medium
g Gravitational constant

Your benefits

- Selection of the level operating mode which is optimum for your application in the device software
- Volume and mass measurements in any container shapes by means of a freely programmable characteristic curve
- Choice of diverse level units with automatic unit conversion
- A customized unit can be specified.
- Has a wide range of uses, e.g.
  - in the event of foam formation
  - in containers with agitators or screen fittings
  - in the event of liquid gases

Applications suitable for custody transfer measurement

The Parts Certificate is issued on the basis of the following standards:
- WELMEC guide 8.8 "General and Administrative Aspects of the Voluntary System of Modular Evaluation of Measuring instruments under the MID".
- OIML R117-1 Edition 2007 (E) "Dynamic measuring systems for liquids other than water".
- EN 12405-1/A1 Edition 2006 "Gas meters – Conversion devices – Part 1: Volume conversion".

Communication protocol

- 4 to 20 mA with HART communication protocol
- PROFIBUS PA
  - The Endress+Hauser devices meet the requirements of the FISCO model.
  - Due to a low current consumption of 13 mA ± 1 mA, the following number of devices can be operated on one bus segment if installing as per FISCO: up to 7 devices for Ex ia, CSA IS and FM IS applications or up to 27 devices for all other applications e.g. in non-hazardous areas, Ex nA etc. Further information on PROFIBUS PA can be found in Operating Instructions BA00034S "PROFIBUS DP/PA: Guidelines for planning and commissioning" and in the PNO Guideline.
- FOUNDATION Fieldbus
  - The Endress+Hauser devices meet the requirements of the FISCO model.
  - Due to a low current consumption of 15.5 mA ± 1 mA, the following number of devices can be operated on one bus segment if installing as per FISCO: up to 6 devices for Ex ia, CSA IS and FM IS applications or up to 24 devices for all other applications e.g. in non-hazardous areas, Ex nA etc. Further information on FOUNDATION Fieldbus, such as requirements for bus system components, can be found in Operating Instructions BA00013S "FOUNDATION Fieldbus Overview".

Input

Measured variable

Measured process variables

- Absolute pressure
- Gauge pressure

Calculated process variables

Level (level, volume or mass)

Measuring range

PMC71 – with ceramic process isolating diaphragm (Ceraphire®) for gauge pressure

Sensor	Maximum sensor measuring range		Lowest calibratable Span [1]	MWP	OPL	Vacuum resistance	Option [2]
	lower (LRL)	upper (URL)					
	[bar (psi)]	[bar (psi)]	[bar (psi)]	[bar (psi)]	[bar (psi)]	[bar_{abs} (psi_{abs})]	
100 mbar (1.5 psi)	−0.1 (−1.5)	+0.1 (+1.5)	0.005 (0.075)	2.7 (40.5)	4 (60)	0.7 (10.5)	1C
250 mbar (3.75 psi)	−0.25 (−3.75)	+0.25 (+3.75)	0.005 (0.075)	3.3 (49.5)	5 (75)	0.5 (7.5)	1E
400 mbar (6 psi)	−0.4 (−6)	+0.4 (+6)	0.005 (0.075)	5.3 (79.5)	8 (120)	0	1F
1 bar (15 psi)	−1 (−15)	+1 (+15)	0.01 (0.15)	6.7 (100.5)	10 (150)	0	1H
2 bar (30 psi)	−1 (−15)	+2 (+30)	0.02 (0.3)	12 (180)	18 (270)	0	1K
4 bar (60 psi)	−1 (−15)	+4 (+60)	0.04 (0.6)	16.7 (250.5)	25 (375)	0	1M
10 bar (150 psi)	−1 (−15)	+10 (+150)	0.1 (1.5)	26.7 (400.5)	40 (600)	0	1P
40 bar (600 psi)	−1 (−15)	+40 (+600)	0.4 (6)	40 (600)	60 (900)	0	1S

1) Turn down > 100:1 on request or can be set on device
2) Product Configurator, order code for "Sensor range; sensor over pressure limit"

PMC71 – with ceramic process isolating diaphragm (Ceraphire®) for absolute pressure

Sensor	Maximum sensor measuring range		Lowest calibratable Span [1]	MWP	OPL	Vacuum resistance	Option [2]
	lower (LRL)	upper (URL)					
	[bar_{abs} (psi_{abs})]	[bar_{abs} (psi_{abs})]	[bar (psi)]	[bar_{abs} (psi_{abs})]	[bar_{abs} (psi_{abs})]	[bar_{abs} (psi_{abs})]	
100 mbar (1.5 psi)	0	+0.1 (+1.5)	0.005 (0.075)	2.7 (40.5)	4 (60)	0	2C
250 mbar (3.75 psi)	0	+0.25 (+3.75)	0.005 (0.075)	3.3 (49.5)	5 (75)	0	2E
400 mbar (6 psi)	0	+0.4 (+6)	0.005 (0.075)	5.3 (79.5)	8 (120)	0	2F
1 bar (15 psi)	0	+1 (+15)	0.01 (0.15)	6.7 (100.5)	10 (150)	0	2H
2 bar (30 psi)	0	+2 (+30)	0.02 (0.3)	12 (180)	18 (270)	0	2K
4 bar (60 psi)	0	+4 (+60)	0.04 (0.6)	16.7 (250.5)	25 (375)	0	2M
10 bar (150 psi)	0	+10 (+150)	0.1 (1.5)	26.7 (400.5)	40 (600)	0	2P
40 bar (600 psi)	0	+40 (+600)	0.4 (6)	40 (600)	60 (900)	0	2S

1) Turn down > 100:1 on request or can be set on device
2) Product Configurator, order code for "Sensor range; sensor over pressure limit"

PMP71 and PMP75 – metallic process isolating diaphragm for gauge pressure

Sensor	Maximum sensor measuring range		Lowest calibratable Span [1]	MWP	OPL	Vacuum resistance [2]	Option [3]
	lower (LRL)	upper (URL)				Silicone oil/ Inert oil	
	[bar (psi)]	[bar (psi)]	[bar (psi)]	[bar (psi)]	[bar (psi)]	[bar_{abs} (psi_{abs})]	
400 mbar (6 psi)	−0.4 (−6)	+0.4 (+6)	0.005 (0.075)	4 (60)	6 (90)	0.01/0.04 (0.15/0.6)	1F
1 bar (15 psi)	−1 (−15)	+1 (+15)	0.01 (0.15)	6.7 (100)	10 (150)		1H
2 bar (30 psi)	−1 (−15)	+2 (+30)	0.02 (0.3)	13.3 (200)	20 (300)		1K
4 bar (60 psi)	−1 (−15)	+4 (+60)	0.04 (0.6)	18.7 (280.5)	28 (420)		1M
10 bar (150 psi)	−1 (−15)	+10 (+150)	0.1 (1.5)	26.7 (400.5)	40 (600)		1P
40 bar (600 psi)	−1 (−15)	+40 (+600)	0.4 (6)	100 (1500)	160 (2400)		1S
100 bar (1 500 psi)	−1 (−15)	+100 (+1500)	1.0 (15)	100 (1500)	400 (6000)		1U
400 bar (6 000 psi)	−1 (−15)	+400 (+6000)	4.0 (60)	400 (6000)	600 (9000)		1W
700 bar (10 500 psi) [4]	−1 (−15)	+700 (+10500)	7.0 (105)	700 (10500)	1050 (15750)		1X

1) Turn down > 100:1 on request or can be set on device
2) The vacuum resistance applies for the measuring cell under reference operating conditions. A ceramic process isolating diaphragm is recommended for applications in the limit range. For type PMP75, the pressure and temperature application limits of the selected filling oil must also be observed → 🗎 113.
3) Product Configurator, order code for "Sensor range; sensor over pressure limit"
4) PMP71 only, PMP75 on request

PMP71 and PMP75 – metallic process isolating diaphragm for absolute pressure

Sensor	Maximum sensor measuring range		Lowest calibratable Span [1]	MWP	OPL	Vacuum resistance [2]	Option [3]
	lower (LRL)	upper (URL)				Silicone oil/ Inert oil	
	[bar_{abs} (psi_{abs})]	[bar_{abs} (psi_{abs})]	[bar (psi)]	[bar_{abs} (psi_{abs})]	[bar_{abs} (psi_{abs})]	[bar_{abs} (psi_{abs})]	
400 mbar (6 psi)	0	+0.4 (+6)	0.005 (0.075)	4 (60)	6 (90)	0.01/0.04 (0.15/0.6)	2F
1 bar (15 psi)	0	+1 (+15)	0.01 (0.15)	6.7 (100)	10 (150)		2H
2 bar (30 psi)	0	+2 (+30)	0.02 (0.3)	13.3 (200)	20 (300)		2K
4 bar (60 psi)	0	+4 (+60)	0.04 (0.6)	18.7 (280.5)	28 (420)		2M
10 bar (150 psi)	0	+10 (+150)	0.1 (1.5)	26.7 (400.5)	40 (600)		2P
40 bar (600 psi)	0	+40 (+600)	0.4 (6)	100 (1500)	160 (2400)		2S
100 bar (1 500 psi)	0	+100 (+1500)	1.0 (15)	100 (1500)	400 (6000)		2U
400 bar (6 000 psi)	0	+400 (+6000)	4.0 (60)	400 (6000)	600 (9000)		2W
700 bar (10 500 psi) [4]	0	+700 (+10500)	7.0 (105)	700 (10500)	1050 (15750)		2X

1) Turn down > 100:1 on request or can be set on device
2) The vacuum resistance applies for the measuring cell under reference operating conditions. A ceramic process isolating diaphragm is recommended for applications in the limit range. For type PMP75, the pressure and temperature application limits of the selected filling oil must also be observed → 🗎 113.
3) Product Configurator, order code for "Sensor range; sensor over pressure limit"
4) PMP71 only, PMP75 on request

PMP71 - metallic process isolating diaphragms for absolute pressure with MID parts certificate

Sensor	Maximum sensor measuring range		Min. WP for gas applications suitable for custody transfer measurement	Min. WP for liquid applications suitable for custody transfer measurement	MWP	OPL	Vacuum resistance [1]	Option [2]
	lower (LRL) [3]	upper (URL) [4]					Silicone oil/ Inert oil	
[bar (psi)]	[bar_{abs} (psi_{abs})]	[bar_{abs} (psi_{abs})]	[bar (psi)]	[bar (psi)]	[bar_{abs} (psi_{abs})]	[bar_{abs} (psi_{abs})]	[bar (psi)]	
10 (150)	0	+10 (150)	0.5 (7.5)	0.5 (7.5)	26.7 (400.5)	40 (600)	0.01/0.04 (0.15/1)	MP
50 (750)	0	+50 (750)	10 (150)	2.5 (37.5)	100 (1500)	400 (6000)	0.01/0.04 (0.15/1)	MT
100 (1500)	0	+100 (1500)	5 (75)	5 (75)	100 (1500)	400 (6000)	0.01/0.04 (0.15/1)	MU

1) The vacuum resistance applies to the measuring cell under reference operating conditions
2) Product Configurator, order code for "Sensor range; sensor over pressure limit"
3) By default, the device is set to a lower sensor measuring range of 0 bar. Please specify when ordering if the lower sensor measuring range is to be set to a different default value.
4) Max. WP (working pressure) for gas and liquid applications suitable for calibration to regulatory standards

Output

Output Signal

- 4 to 20 mA with superimposed digital communication protocol HART, 2-wire
- 1-5V DC, 3-wire
- Digital communication signal PROFIBUS PA (Profile 3.0), 2-wire
  - Signal coding: Manchester Bus Powered (MBP): Manchester II
  - Transmission rate: 31.25 KBit/s voltage mode
- Digital communication signal FOUNDATION Fieldbus, 2-wire
  - Signal coding: Manchester Bus Powered (MBP): Manchester II
  - Transmission rate: 31.25 KBit/s voltage mode

Output	Internal + LCD	External + LCD	Internal
	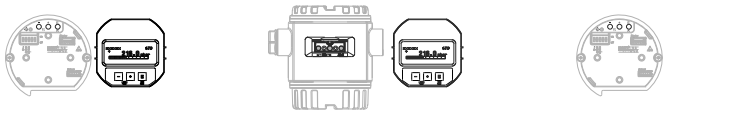		
	Option [1]		
4 to 20mA HART	B	A	C
4 to 20mA HART, Li=0	E	D	F
1-5V DC	H	G	-
PROFIBUS PA	N	M	O
FOUNDATION Fieldbus	Q	P	R

1) Product Configurator, order code for "Display, operation: "

Signal range

4 to 20 mA

3.8 mA to 20.5 mA

1-5V DC

0.95 to 5.125 V

Signal on alarm

4 to 20 mA HART

As per NAMUR NE43.

- Max. alarm: can be set from 21 to 23 mA (factory setting: 22 mA)
- Hold measured value: last measured value is held
- Min. alarm: 3.6 mA

1-5V DC

- Max. alarm: can be set from 5.25 to 5.75 V
- Min. Alarm: 0.9 V

PROFIBUS PA

As per NAMUR NE43.

Can be set in the Analog Input Block.

Options:
- Last Valid Out Value (factory setting)
- Fail Safe Value
- Status bad

FOUNDATION Fieldbus

As per NAMUR NE43.

Can be set in the Analog Input Block.

Options:
- Last Good Value
- Fail Safe Value (factory setting)
- Wrong Value

Load

4 to 20 mA HART

In order to guarantee sufficient terminal voltage in two-wire devices, a maximum load resistance R (including line resistance) must not be exceeded depending on the supply voltage U_0 of the supply unit. In the following load diagrams, observe the position of the jumper and the explosion protection:

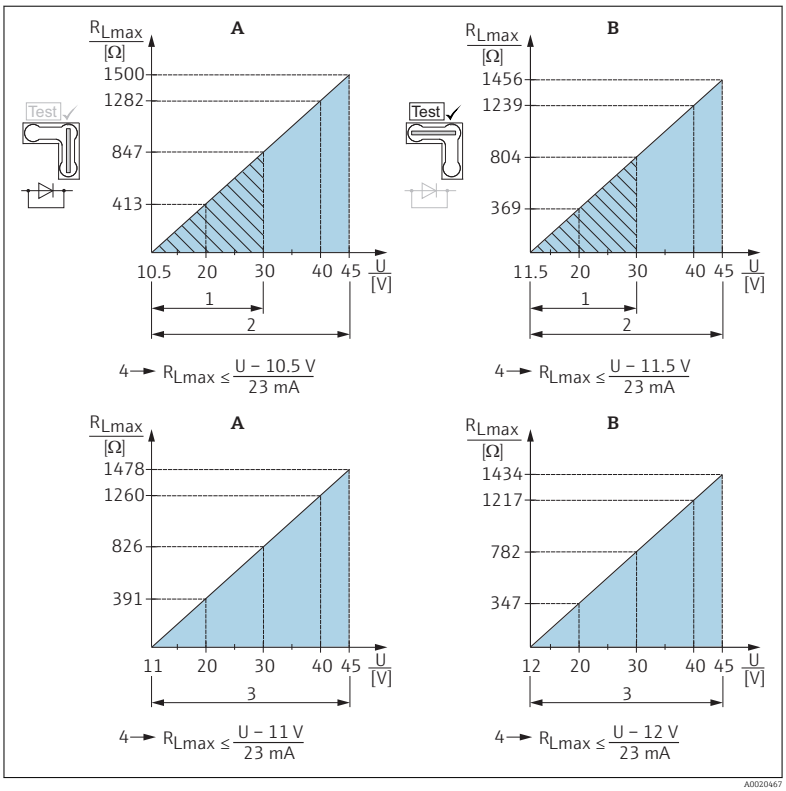

A Jumper for 4 to 20 mA test signal set to "Non-test" position
B Jumper for 4 to 20 mA test signal set to "Test" position
1 Power supply 10.5 (11.5) to 30 V DC for 1/2 G, 1 GD, 1/2 GD, FM IS, CSA IS, IECEx ia, NEPSI Ex ia
2 Power supply 10.5 (11.5) to 45 V DC for devices for non-hazardous areas, 1/2 D, 1/3 D, 2 G Ex d, 3 G Ex nA, FM XP, FM DIP, FM NI, CSA XP, CSA dust ignition-proof, NEPSI Ex d
3 Power supply 11 (12) to 45 V DC for PMC71, Ex d[ia], NEPSI Ex d[ia]
4 R_{Lmax} maximum load resistance
U Supply voltage

When operating via a handheld terminal or via a PC with an operating program, a minimum communication resistance of 250 Ω must be taken into account.

1-5V DC

The load must be at least 100 kΩ.

Dead time, time constant

Presentation of the dead time and the time constant:

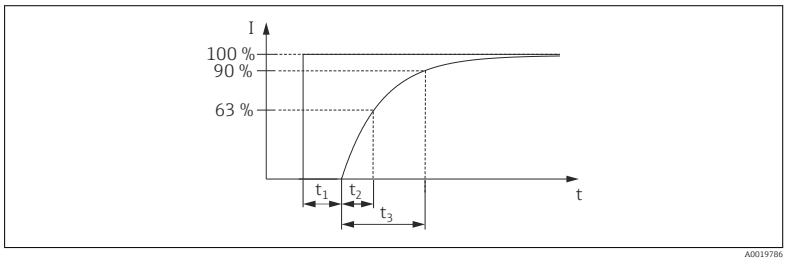

Dynamic behavior, current output

Type		Measuring cell	Dead time (t_1) [ms]	Time constant T63 (t_2) [ms]	Time constant T90 (t_3) [ms]
PMC71	max.	All	90	120	276
PMP71	max.	▪ 400 mbar (6 psi) ▪ ≥1 bar (15 psi)	45	▪ 70 ▪ 35	▪ 161 ▪ 81
PMP75	max.	PMP71 + influence of the diaphragm seal			

Dynamic behavior Digital output (HART electronics)

A typical burst rate of 300 ms results in the following behavior:

Type		Measuring cell	Dead time (t_1) [ms]	Dead time (t_1) [ms] + Time constant T63 (t_2) [ms]	Dead time (t_1) [ms] + Time constant T90 (t_3) [ms]
PMC71	remains stable for a minimum of	All	250	370	436
	max.		1050	1170	1236
PMP71	remains stable for a minimum of	▪ 400 mbar (6 psi) ▪ ≥1 bar (15 psi)	205	▪ 275 ▪ 240	▪ 321 ▪ 241
	max.	▪ 400 mbar (6 psi) ▪ ≥1 bar (15 psi)	1005	▪ 1075 ▪ 1040	▪ 1121 ▪ 1041
PMP75	max.	PMP71 + influence of the diaphragm seal			

Reading cycle

- Acyclic: max. 3/s, typically 1/s (depending on command # and number of preambles)
- Cyclic (burst): max. 3/s, typically 2/s

The device commands the BURST MODE functionality for cyclical value transmission via the HART communication protocol.

Cycle time (update time)

Cyclic (burst): min. 300 ms

Response time

- Acyclic: min. 330 ms, typically 590 ms (depending on command # and number of preambles)
- Cyclic (burst): min. 160 ms, typically 350 ms (depending on command # and number of preambles)

Dynamic behavior 1-5V DC

Type		Measuring cell	Dead time (t_1) [ms]	Time constant T63 (t_2) [ms]	Time constant T90 (t_3) [ms]
PMP71	max.	All	40	70	180

Dynamic behavior PROFIBUS PA

A typical PLC cycle time of 1 s results in the following behavior:

Type		Measuring cell	Dead time (t_1) [ms]	Dead time (t_1) [ms] + Time constant T63 (t_2) [ms]	Dead time (t_1) [ms] + Time constant T90 (t_3) [ms]
PMC71	remains stable for a minimum of	All	125	245	311
	max.		1325	1445	1511
PMP71	remains stable for a minimum of	▪ 400 mbar (6 psi) ▪ ≥1 bar (15 psi)	80	▪ 150 ▪ 115	▪ 196 ▪ 116
	max.	▪ 400 mbar (6 psi) ▪ ≥1 bar (15 psi)	1280	▪ 1350 ▪ 1315	▪ 1396 ▪ 1316
PMP75	max.	PMP71 + influence of the diaphragm seal			

Reading cycle (PLC)

- Acyclic: Typically 25/s
- Cyclic: Typically 30/s (depending on the number and type of the function blocks used in the closed-control loop)

Cycle time (update time)

remains stable for a minimum of 200 ms

The cycle time in a bus segment in cyclic data communication depends on the number of devices, on the segment coupler used and on the internal PLC cycle time. A new measured value can be determined up to five times a second.

Response time

- Acyclic: Approx. 60 ms to 70 ms (depending on Min. Slave Interval)
- Cyclic: Approx. 10 ms to 13 ms (depending on Min. Slave Interval)

Dynamic behavior FOUNDATION Fieldbus

A typical configuration for the macro cycle time (host system) of 1 s results in the following behavior:

Type		Measuring cell	Dead time (t_1) [ms]	Dead time (t_1) [ms] + Time constant T63 (t_2) [ms]	Dead time (t_1) [ms] + Time constant T90 (t_3) [ms]
PMC71	remains stable for a minimum of	All	135	255	321
	max.		1135	1255	1321
PMP71	remains stable for a minimum of	▪ 400 mbar (6 psi) ▪ ≥1 bar (15 psi)	90	▪ 160 ▪ 125	▪ 206 ▪ 126
	max.	▪ 400 mbar (6 psi) ▪ ≥1 bar (15 psi)	1090	▪ 1160 ▪ 1125	▪ 1206 ▪ 1126
PMP75	max.	PMP71 + influence of the diaphragm seal			

Reading cycle

- Acyclic: Typically 10/s
- Cyclic: max. 10/s (dependent on the number and type of function blocks used in a closed-control loop)

Cycle time (update time)

Cyclic: Min. 100 ms

Response time

- Acyclic: Typically 100 ms (for standard bus parameter settings)
- Cyclic: max. 20 ms (for standard bus parameter settings)

Damping

A damping affects all outputs (output signal, display):
- via local display, handheld terminal or PC (handheld terminal or PC not for 1-5V DC) with operating program, continuous from 0 to 999 s
- Also for HART and PROFIBUS PA: Via DIP switch on the electronic insert, switch position "on" = set value and "off"
- 1-5V DC: via DIP switch on electronic insert switch position "on" = set value and "off"
- Factory setting: 2 s

Alarm current

Description	Option [1]
Min alarm current	J
HART burst mode PV	J
Min alarm current + HART burst mode PV	J

1) Product Configurator, "Additional options 1" and "Additional options 2" ordering feature

Firmware version

Description	Option [1]
02.20.zz, HART 7, DevRev22	72
02.11.zz, HART 5, DevRev21	73
04.00.zz, FF, DevRev07	74
04.01.zz, PROFIBUS PA, DevRev03	75
02.10.zz, HART 5, DevRev21	76
03.00.zz, FF, DevRev06	77
04.00.zz, PROFIBUS PA	78
02.30.zz, HART 7	In preparation

1) Product Configurator, order code for "Firmware version"

HART protocol-specific data

Manufacturer ID	17 (11 hex)
Device type code	24 (18 hex)
Device revision	▪ 21 (15 hex) - SW version 02.1y.zz - HART specification 5 ▪ 22 (16 hex) - SW version 02.2y.zz - HART specification 7
HART specification	▪ 5 ▪ 7
DD revision	▪ 4 (Russian in language selection) for device revision 21 ▪ 3 (Dutch in language selection) for device revision 21 ▪ 1 for device revision 22
Device description files (DTM, DD)	Information and files at: ▪ www.endress.com ▪ www.fieldcommgroup.org
HART load	Min. 250 Ω

HART device variables	The measured values are assigned to the device variables as follows: **Measured values for PV (primary variable)** ▪ Pressure ▪ Level ▪ Tank content **Measured values for SV, TV (second and third variable)** Pressure **Measured values for QV (fourth variable)** Temperature
Supported functions	▪ Burst mode ▪ Additional transmitter status ▪ Device locking ▪ Alternative operating modes

PROFIBUS PA protocol-specific data

Manufacturer ID	17 (11 hex)
Identification number	1541 hex
Profile version	3.0 ▪ SW version 03.00.zz ▪ SW version 04.00.zz 3.02 SW version 04.01.zz (device revision 3) Compatibility with SW version 03.00.zz and higher.
GSD revision	▪ 4 (SW version 3.00.zz and 4.00.zz) ▪ 5 (device revision 3)
DD revision	▪ 1 (SW version 3.00.zz and 4.00.zz) ▪ 1 (device revision 3)
GSD file	Information and files at:
DD files	▪ www.endress.com ▪ www.profibus.org
Output values	**Measured value for PV (via Analog Input Function Block)** ▪ Pressure ▪ Level ▪ Tank content **Measured value for SV** ▪ Pressure ▪ Temperature
Input values	Input value sent from PLC, can be shown on display
Supported functions	▪ Identification & maintenance Simplest device identifier on the control system and nameplate ▪ Condensed status (only with Profile Version 3.02) ▪ Automatic ID number adjustment and switchable to the following ID numbers (only with Profile Version 3.02): – 9700: Profile-specific transmitter identification number with the "Classic" or "Condensed" status". – 1501: Compatibility mode for the old Cerabar S generation (PMC731, PMP731, PMC631, PMP635). – 1541: Identification number of the new Cerabar S generation (PMC71, PMP71, PMP75). ▪ Device locking: The device can be locked by hardware or software.

FOUNDATION Fieldbus protocol-specific data

Manufacturer ID	452B48 hex
Device type	1007 hex
Device revision	▪ 6 - SW version 03.00.zz ▪ 7 - SW version 04.00.zz (FF-912)
DD revision	▪ 3 (device revision 6) ▪ 2 (device revision 7)
CFF revision	▪ 4 (device revision 6) ▪ 1 (device revision 7)

DD files	Information and files at: ▪ www.endress.com ▪ www.fieldcommgroup.org
CFF files	
Device tester version (ITK version)	▪ 5.0 (device revision 6) ▪ 6.01 (device revision 7)
Number of ITK test campaign	▪ IT054600 (Device Revision 6) ▪ IT085500 (Device Revision 7)
Link Master (LAS) capable	Yes
Choice of "Link Master" and "Basic Device"	Yes, factory setting is Basic Device
Node address	Factory setting: 247 (F7 hex)
Supported functions	Field diagnostics profile (only with FF912) The following methods are supported: ▪ Restart ▪ Configure error as warning or alarm ▪ HistoROM ▪ Peakhold ▪ Alarm info ▪ Sensor trim
Number of VCRs	▪ 44 (device revision 6) ▪ 24 (device revision 7)
Number of link objects in VFD	50

Virtual communication references (VCRs)

	Device revision 6	Device revision 7
Permanent entries	44	1
Client VCRs	0	0
Server VCRs	5	10
Source VCRs	8	43
Sink VCRs	0	0
Subscriber VCRs	12	43
Publisher VCRs	19	43

Link settings

	Device revision 6	Device revision 7
Slot time	4	4
Min. Inter PDU delay	12	10
Max. response delay	10	10

Transducer Blocks

Block	Content	Output values
TRD1 Block	Contains all parameters related to the measurement	▪ Pressure or level (channel 1) ▪ Process temperature (channel 2)
Service Block	Contains service information	▪ Pressure after damping (channel 3) ▪ Pressure peakhold indicator (channel 4) ▪ Counter for max. pressure transgressions (channel 5)

Block	Content	Output values
Diagnostic Block	Contains diagnostic information	Error code via DI channels (channel 0 to 16)
Display Block	Contains parameters to configure the onsite display	No output values

Function blocks

Block	Content	Number blocks	Execution time		Functionality	
			Device Revision 6	Device Revision 7	Device Revision 6	Device Revision 7
Resource Block	This block contains all the data that uniquely identifies the device; it is an electronic version of a nameplate for the device.	1			enhanced	enhanced
Analog Input Block 1 Analog Input Block 2	The AI Block receives the measuring data from the Sensor Block, (selectable via a channel number) and makes the data available to other function blocks at its output. Enhancement: Digital outputs for process alarms, fail safe mode	2	45 ms	45 ms (without trend and alarm reports)	enhanced	enhanced
Digital Input Block	This block contains the discrete data of the Diagnose Block (selectable via a channel number 0 to 16) and provides them for other blocks at the output.	1	40 ms	30 ms	standard	enhanced
Digital Output Block	This block converts the discrete input and thus initiates an action (selectable via a channel number) in the DP Flow Block or in the Service Block. Channel 1 resets the counter for max. pressure transgressions.	1	60 ms	40 ms	standard	enhanced
PID Block	This block is used as a proportional-integral-derivative controller and can be used universally for closed-loop-control in the field. It enables cascade mode and feedforward control. Input IN can be indicated on the display. The selection is performed in the Display Block (DISPLAY_MAIN_LINE_CONTENT).	1	120 ms	70 ms	standard	enhanced
Arithmetic Block	This block is designed to permit simple use of popular measurement math functions. The user does not have to know how to write equations. The math algorithm is selected by name, chosen by the user for the function to be performed.	1	50 ms	40 ms	standard	enhanced
Input Selector Block	The Input Selector Block facilitates the selection of up to four inputs and generates an output based on the configured action. This block normally receives its inputs from AI Blocks. The block performs maximum, minimum, average and 'first good' signal selection. Inputs IN1 to IN4 can be indicated on the display. The selection is performed in the Display Block (DISPLAY_MAIN_LINE_CONTENT).	1	35 ms	35 ms	standard	enhanced
Signal Characterizer Block	The Signal Characterizer Block has two sections, each with an output that is a non-linear function of the respective input. The non-linear function is generated by a single look-up table with 21 arbitrary x-y pairs.	1	30 ms	40 ms	standard	enhanced
Integrator Block	The Integrator Block integrates a variable as a function of the time or accumulates the counts from a Pulse Input Block. The block can be used as a totalizer that counts up until a reset, or as a batch totalizer whereby the integrated value is compared against a target value generated before or during the control routine and generates a binary signal when the target value is reached.	1	35 ms	40 ms	standard	enhanced
Analog Alarm Block	This block contains all process alarm conditions (working like a comparator) and represents them at the output.	1	35 ms	35 ms	standard	enhanced

Additional function block information:

Instantiatable function blocks	YES	YES
Number of additional instantiatable function blocks	11	5

Power supply

WARNING

Electrical safety is compromised by an incorrect connection!

- When using the measuring device in hazardous areas, the relevant national standards and regulations as well as the Safety Instructions or Installation or Control Drawings must also be observed.→ 127.
- All explosion protection data are given in separate documentation which is available upon request. The Ex documentation is supplied as standard with all Ex devices→ 127.
- Devices with integrated overvoltage protection must be grounded→ 29.
- Protective circuits against reverse polarity, HF influences and overvoltage peaks are integrated.

Terminal assignment

4 to 20 mA HART

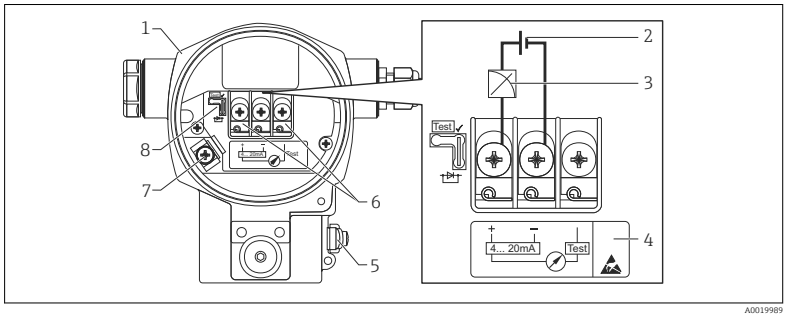

A0019989

1 *Housing*
2 *Supply voltage*
3 *4 to 20 mA*
4 *Devices with integrated overvoltage protection are labeled "OVP" (overvoltage protection) here.*
5 *External ground terminal*
6 *4 to 20 mA test signal between positive and test terminal*
7 *Internal ground terminal*
8 *Jumper for 4 to 20 mA test signal*

1-5V DC

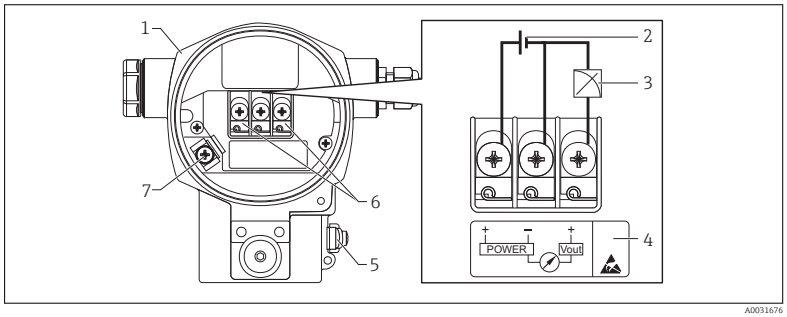

A0031676

1 *Housing*
2 *Supply voltage*
3 *1-5V DC*
4 *Overvoltage protection (OVP) marking*
5 *External ground terminal*
6 *Terminals*
7 *Internal ground terminal*

PROFIBUS PA and FOUNDATION Fieldbus

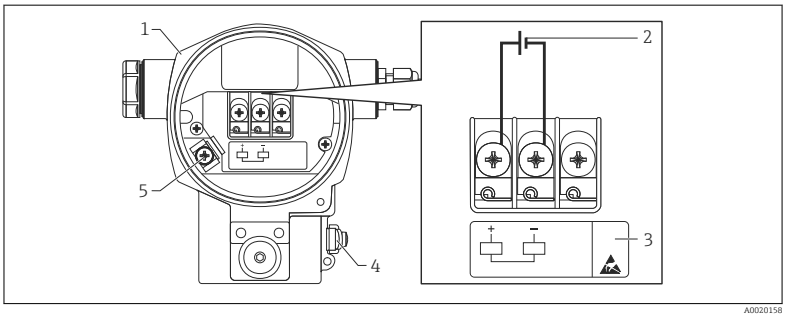

1 Housing
2 Supply voltage
3 Devices with integrated overvoltage protection are labeled "OVP" (overvoltage protection) here.
4 External ground terminal
5 Internal ground terminal

Supply voltage

4 to 20 mA HART

Electronic version	Jumper for 4 to 20 mA test signal in "Test" position (delivery status)	Jumper for 4 to 20 mA test signal in "Non-test" position
Version for non-hazardous area	11.5 to 45 V DC	10.5 to 45 V DC
Intrinsically safe	11.5 to 30 V DC	10.5 to 30 V DC
▪ Other types of protection ▪ Devices without certificate	11.5 to 45 V DC (versions with 35 V DC plug-in connection)	10.5 to 45 V DC (versions with 35 V DC plug-in connection)

Measuring a 4 to 20 mA test signal

Jumper position for test signal	Description
	▪ Measurement of 4 to 20 mA test signal via the positive and test terminal: Possible. (Thus, the output current can be measured without interruption via the diode.) ▪ Delivery status ▪ Minimum supply voltage: 11.5 V DC
	▪ Measurement of 4 to 20 mA test signal via positive and test terminal: Not possible. ▪ Minimum supply voltage: 10.5 V DC

1-5V DC

- Non-hazardous area: 9 to 35 V DC
- Ex-d: 9 to 35 V DC

PROFIBUS PA

- Version for non-hazardous areas: 9 to 32 V DC
- Ex ia: 10.5 to 30 V DC

FOUNDATION Fieldbus

- Version for non-hazardous areas: 9 to 32 V DC
- Ex ia: 10.5 to 30 V DC

Current consumption

- 1-5V DC:
  9 V = 1.8 mA
  35 V = 0.8 mA
- PROFIBUS PA: 13 mA ±1 mA, switch-on current corresponds to IEC 61158-2, Clause 21
- FOUNDATION Fieldbus: 15.5 mA ±1 mA, switch-on current corresponds to IEC 61158-2, Clause 21

Electrical connection

PROFIBUS PA

The digital communication signal is transmitted to the bus via a two-wire connection. The bus also provides the power supply. For further information on the network structure and grounding, and for further bus system components such as bus cables, see the relevant documentation, e.g. Operating Instructions BA00034S "PROFIBUS DP/PA: Guidelines for planning and commissioning" and the PNO Guideline.

FOUNDATION Fieldbus

The digital communication signal is transmitted to the bus via a two-wire connection. The bus also provides the power supply. For further information on the network structure and grounding and for further bus system components such as bus cables, see the relevant documentation, e.g. Operating Instructions BA00013S "FOUNDATION Fieldbus Overview" and the FOUNDATION Fieldbus Guideline.

Terminals

- Supply voltage and internal ground terminal: 0.5 to 2.5 mm^2 (20 to 14 AWG)
- External ground terminal: 0.5 to 4 mm^2 (20 to 12 AWG)

Cable entries

Approval	Cable gland	Clamping area
Standard, II 1/2 G Ex ia, IS	Plastic M20x1.5	5 to 10 mm (0.2 to 0.39 in)
ATEX II 1/2 D, II 1/3 D, II 1/2 GD Ex ia, II 1 GD Ex ia, II 3 G Ex nA	Metal M20x1.5 (Ex e)	7 to 10.5 mm (0.28 to 0.41 in)

1-5V DC

The cable entries have a 1/2 FNPT thread. The connection on the customer's side is protected by a plastic connector. A cable gland is not envisaged.

For additional technical data, see section on housing → 🗎 55

Device plug

Devices with Harting plug Han7D

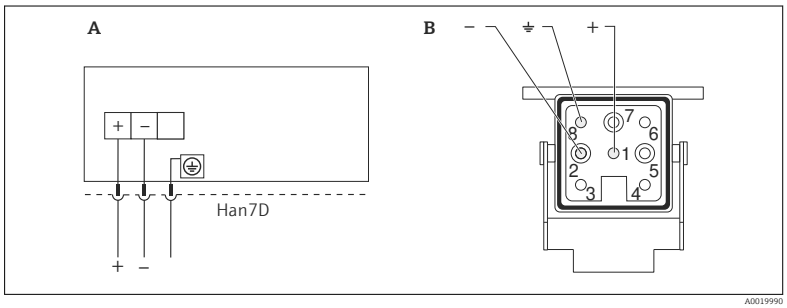

A Electrical connection for devices with Harting plug Han7D
B View of the plug-in connection on the device

Material: CuZn, gold-plated plug-in jack and plug

Cable version connection

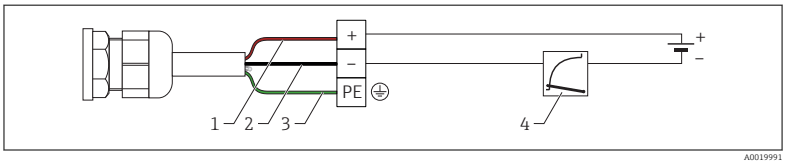

1 *rd = red*
2 *bk = black*
3 *gnye = green*
4 *4 to 20 mA*

Connection via cable version 1-5V DC

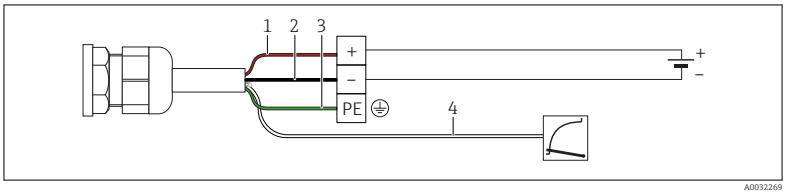

1 *rd = red*
2 *bk = black*
3 *gnye = green*
4 *1-5V DC*

Devices with M12 plug

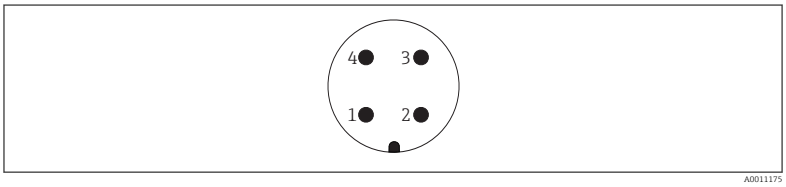

1 *Signal +*
2 *Not assigned*
3 *Signal –*
4 *Ground*

Endress+Hauser offers the following accessories for devices with an M12 plug:

Plug-in jack M 12x1, straight
- Material: Body PA; coupling nut CuZn, nickel-plated
- Degree of protection (fully locked): IP67
- Order number: 52006263

Plug-in jack M 12x1, elbowed
- Material: Body PBT/PA; coupling nut GD-Zn, nickel-plated
- Degree of protection (fully locked): IP67
- Order number: 71114212

Cable 4x0.34 mm^2 (20 AWG) with M12 socket, elbowed, screw plug, length 5 m (16 ft)
- Material: Body PUR; coupling nut CuSn/Ni; cable PVC
- Degree of protection (fully locked): IP67
- Order number: 52010285

Devices with 7/8" plug

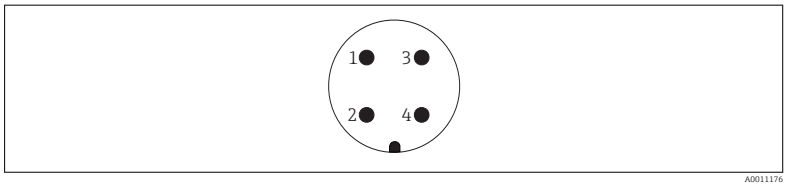

1 Signal –
2 Signal +
3 Not assigned
4 Shielding

External thread: 7/8 - 16 UNC
- Material: 316L (1.4401)
- Degree of protection: IP68

Cable specification

HART

- Endress+Hauser recommends using shielded, twisted-pair two-wire cables.
- Cable outer diameter: 5 to 9 mm (0.2 to 0.35 in) depending on the cable entry used → 🗎 26

1-5V DC

- Endress+Hauser recommends using a shielded cable.
- Cable outer diameter: 5 to 9 mm (0.2 to 0.35 in) depending on the cable entry used → 🗎 26

Maximum cable length

The following table shows the tolerance of the voltage output for a representative cable with a length of up to 100 m (328 ft), a resistance of 18 Ohm/km and specification 18 AWG (cable cross-section 0.8 mm^2).

Tolerance of voltage output at cable end	Length
0.5 mV	25 m (82 ft)
1 mV	50 m (164 ft)
1.5 mV	75 m (246 ft)
2 mV	100 m (328 ft)

PROFIBUS PA

Use a twisted, shielded twin-core cable, preferably cable type A.

For further information regarding cable specifications, see the Operating Instructions BA00034S "PROFIBUS DP/PA: Guidelines for planning and commissioning", the PNO guideline 2.092 "PROFIBUS PA User and Installation Guideline" and IEC 61158-2 (MBP).

FOUNDATION Fieldbus

Use a twisted, shielded twin-core cable, preferably cable type A.

For further information on the cable specifications, see Operating Instructions BA00013S "FOUNDATION Fieldbus Overview", FOUNDATION Fieldbus Guideline and IEC 61158-2 (MBP).

Start-up current

12 mA

Residual ripple

Without influence on 4 to 20 mA signal up to ±5% residual ripple within the permitted voltage range [according to HART hardware specification HCF_SPEC-54 (DIN IEC 60381-1)].

Overvoltage protection (optionally for HART, PROFIBUS PA and FOUNDATION Fieldbus)	▪ Overvoltage protection: – Nominal functioning DC voltage: 600 V – Nominal discharge current: 10 kA ▪ Surge current check î = 20 kA satisfied as per DIN EN 60079-14: 8/20 µs ▪ Arrester AC current check I = 10 A satisfied Ordering information: Product Configurator, order code for "Additional options 1" or Additional options 2", option "M" NOTICE **Device could be destroyed!** ▶ Devices with integrated overvoltage protection must be grounded.
Influence of power supply	≤0.0006 % of URL/1 V

Performance characteristics of PMP71/PMP75 metal pressure transmitter (Sensor module + Electronic module)

Preamble

The performance characteristic of the transmitter refers to "Accuracy of the transmitter". The factors influencing accuracy can be divided into two groups
- Total performance of transmitter → 30
- Installation dependent influencing factors → 42

Total performance of transmitter

Transmitter total performance → 31comprises the reference accuracy and the ambient temperature effect and is calculated using the following formula:

Total performance	=	$\pm\sqrt{(E1)^2 + (E2)^2}$
E1	=	Reference accuracy → 30
E2	=	ambient temperature effect per ±28 °C (50 °F) (corresponds to the range of −3 to +53 °C (+27 to +127 °F)) → 32

Reference accuracy [E1]

Reference accuracy E1 as % [1] The specifications refer to the calibrated span/Upper Range Value (URV).			
Measuring cell	**PMP71**		**PMP75** [2]
	Standard **Reference accuracy** [3]	**Platinum** [4] **Reference accuracy**	**Standard** **Reference accuracy**
400 mbar (6 psi)	▪ TD 1:1 = ±0.05 ▪ TD > 1:1 = ±0.05 · TD	▪ TD 1:1 = ±0.025 ▪ TD > 1:1 = ±0.04	▪ TD 1:1 = ±0.15 ▪ TD > 1:1 = ±0.15 · TD
1 bar (15 psi)	▪ TD ≤ 2.5:1 = ±0.05 ▪ TD > 2.5:1 = ±0.02 · TD	▪ TD 1:1 = ±0.025 ▪ TD > 1:1 = ±0,03	▪ TD ≤ 2.5:1 = ±0.075 ▪ TD > 2.5:1 = ±0.03 · TD
2 bar (30 psi)	▪ TD ≤ 5:1 = ±0.05 ▪ TD > 5:1 = ±0.01 · TD	▪ TD 1:1 = ±0.025 ▪ TD > 1:1 = ±0,03	▪ TD ≤ 5:1 = ±0.075 ▪ TD > 5:1 = ±0.015 · TD
4 bar (60 psi)	▪ TD ≤ 10:1 = ±0.05 ▪ TD > 10:1 = ±0.005 · TD	▪ TD 1:1 = ±0.025 ▪ TD > 1:1 = ±0,03	▪ TD ≤ 10:1 = ±0.075 ▪ TD > 10:1 = ±0.0075 · TD
10 bar (150 psi)	▪ TD ≤ 10:1 = ±0.05 ▪ TD > 10:1 = ±0.005 · TD	▪ TD 1:1 = ±0.025 ▪ TD > 1:1 = ±0,03	▪ TD ≤ 10:1 = ±0.075 ▪ TD > 10:1 = ±0.0075 · TD
40 bar (600 psi)	▪ TD ≤ 10:1 = ±0.05 ▪ TD > 10:1 = ±0.005 · TD	▪ TD 1:1 = ±0.025 ▪ TD > 1:1 = ±0,03	▪ TD ≤ 10:1 = ±0.075 ▪ TD > 10:1 = ±0.0075 · TD
100 bar (1 500 psi)	▪ TD ≤ 10:1 = ±0.05 ▪ TD > 10:1 = ±0.005 · TD	▪ TD 1:1 = ±0.035 ▪ TD > 1:1 = ±0.04	▪ TD ≤ 10:1 = ±0.075 ▪ TD > 10:1 = ±0.0075 · TD
400 bar (6 000 psi)	▪ TD ≤ 5:1 = ±0.1 ▪ TD > 5:1 = ±0.02 · TD	▪ TD 1:1 = ±0.065 ▪ TD > 1:1 = ±0.09	▪ TD ≤ 5:1 = ±0.15 ▪ TD > 5:1 = ±0.03 · TD
700 bar (10 500 psi)	▪ TD ≤ 5:1 = ±0.1 ▪ TD > 5:1 = ±0.02 · TD	▪ TD 1:1 = ±0.065 ▪ TD > 1:1 = ±0.09	-

1) Reference accuracy comprises the non-linearity [DIN EN 61298-2] including the hysteresis [DIN EN 61298-2] and non-repeatability [DIN EN 61298-2] in accordance with the limit point method as per [DIN EN 60770]. Reference accuracy for standard up to TD 100:1, for platinum up to TD 5:1. Valid for all membrane materials.
2) PMP75: No diaphragm seal errors are taken into account. Diaphragm seal errors can be calculated separately in the Applicator diaphragm seal calculation module. Link to online tool Applicator: www.endress.com/applicator → Sizing Diaphragm Seal
3) PMP71 with 1-5V DC: for 400 mbar (6 psi) to 100 bar (1 500 psi) measuring cells, the values specified in the table must be multiplied by a factor of 2. For 400 bar (6 000 psi) and 700 bar (10 500 psi) measuring cells, the values specified in the table must be multiplied by a factor of 1.5.
4) Platinum version not for flush-mounted process connections G ½ and M20

Please refer to the next chapter “Detailed performance explanation and calculation” for further explanations on "Ambient temperature effect".

Total performance – Specification values

PMP71: Total performance as % The specifications refer to the calibrated span/Upper Range Value (URV).										
Measuring cell	Standard [1]					Platinum [1]				
	TD 1:1	TD 2:1	TD 3:1	TD 4:1	TD 5:1	TD 1:1	TD 2:1	TD 3:1	TD 4:1	TD 5:1
400 mbar (6 psi)	±0.18	±0.23	±0.29	±0.35	±0.41	±0.17	±0.21	±0.25	±0.29	±0.33
1 bar (15 psi)	±0.18	±0.22	±0.26	±0.30	±0.34	±0.17	±0.21	±0.25	±0.29	±0.33
2 bar (30 psi)	±0.18	±0.22	±0.25	±0.29	±0.33	±0.17	±0.21	±0.25	±0.29	±0.33
4 bar (60 psi)	±0.18	±0.22	±0.25	±0.29	±0.33	±0.17	±0.21	±0.25	±0.29	±0.33
10 bar (150 psi)	±0.12	±0.15	±0.18	±0.21	±0.24	±0.11	±0.14	±0.17	±0.20	±0.23
40 bar (600 psi)	±0.12	±0.15	±0.18	±0.21	±0.24	±0.11	±0.14	±0.17	±0.20	±0.23
100 bar (1 500 psi)	±0.13	±0.15	±0.16	±0.18	±0.19	±0.13	±0.15	±0.16	±0.17	±0.19
400 bar (6 000 psi)	±0.16	±0.17	±0.18	±0.20	±0.21	±0.14	±0.17	±0.18	±0.19	±0.21
700 bar (10 500 psi)	±0.16	±0.17	±0.18	±0.20	±0.21	±0.14	±0.17	±0.18	±0.19	±0.21

1) The specification values apply to the temperature range per ±28 °C (50 °F) (corresponds to the range of −3 to +53 °C (+27 to +127 °F)) for all measuring cells. The specification values apply to the analog output (i.e. including electronics errors). The specification values apply to gauge pressure and absolute pressure. The specification values apply to membrane material AISI 316L (1.4435).

Long-term stability

PMP71/PMP75: long-term stability as % The specifications refer to the upper range limit (URL) [1].			
Measuring cell	Standard & platinum		
	1 year	5 years	10 years
400 mbar (6 psi)	± 0.05	± 0.07	± 0.10
1 bar (15 psi)	± 0.05	± 0.07	± 0.10
2 bar (30 psi)	± 0.07	± 0.12	± 0.15
4 bar (60 psi)	± 0.05	± 0.07	± 0.10
10 bar (150 psi)	± 0.05	± 0.07	± 0.10
40 bar (600 psi)	± 0.05	± 0.07	± 0.10
100 bar (1 500 psi)	± 0.05	± 0.07	± 0.10
400 bar (6 000 psi)	± 0.05	± 0.07	± 0.10
700 bar (10 500 psi)	± 0.05	± 0.07	± 0.10

1) PMP75: No diaphragm seal errors are taken into account. Diaphragm seal errors can be calculated separately in the Applicator diaphragm seal calculation module. Link to online tool Applicator: www.endress.com/applicator → Sizing Diaphragm Seal

Detailed Performance Explanation and Calculation

To calculate the total performance outside the temperature range of −3 to +53 °C (+27 to +127 °F) or for a membrane material other than 1.4435/316L, please refer to the following sections: "Ambient temperature effect" and "Calculating the total performance" [1].

Ambient temperature effect [E2]

- $E2 = (E2_M \cdot CF_1) + E2_E + E2_{LT}$
- $E2_M$ = Main temperature error
- CF_1 = Temperature range correction factor
- $E2_E$ = Electronics error for analog output
- $E2_{LT}$ = low temperature error

$E2_M$ - Main temperature error

The output changes due to the effect of ambient temperature [IEC 61298-3] with respect to reference temperature [DIN 16086]. The values specify the maximum error due to min./max. ambient or process temperature conditions.

The specified error is applicable to the membrane material AISI 316L.

PMP71/PMP75: main temperature error $E2_M$ as % per ±28 °C (50 °F) (corresponds to the range of −3 to +53 °C (+27 to +127 °F)) The specifications refer to the calibrated span/Upper Range Value (URV).		
Measuring cell	**Standard**	**Platinum**
400 mbar (6 psi)	± (0.04 · TD + 0.08)	± (0.04 · TD + 0.08)
1 bar (15 psi)	± (0.04 · TD + 0.08)	± (0.04 · TD + 0.08)
2 bar (30 psi)	± (0.04 · TD + 0.08)	± (0.04 · TD + 0.08)
4 bar (60 psi)	± (0.04 · TD + 0.08)	± (0.04 · TD + 0.08)
10 bar (150 psi)	± (0.03 · TD + 0.03)	± (0.03 · TD + 0.03)
40 bar (600 psi)	± (0.03 · TD + 0.03)	± (0.03 · TD + 0.03)
100 bar (1 500 psi)	± (0.015 · TD + 0.06)	± (0.015 · TD + 0.06)
400 bar (6 000 psi)	± (0.015 · TD + 0.06)	± (0.015 · TD + 0.06)
700 bar (10 500 psi)	± (0.015 · TD + 0.06)	± (0.015 · TD + 0.06)

CF_1 - Temperature range correction factor

PMP71/PMP75: correction factor CF_1		
Measuring cell	**Temperature range**	**Factor, CF_1**
For all measuring cells	25 °C ± 28 °C (−3 to +53 °C (+27 to +127 °F))	1
	−32 to −4 °C (−26 to +25 °F) and +54 to +85 °C (+129 to +185 °F)	2
	−50 to −33 °C (−58 to −27 °F)	2.3

$E2_E$ - Electronics error

PMP71/PMP75: electronics error $E2_E$ as % The specifications refer to the calibrated span/Upper Range Value (URV).			
Measuring cell	**Electronics**	**Temperature range**	**Error [1]**
For all measuring cells	Analog output (4 to 20 mA)	−50 to +85 °C (−58 to +185 °F)	0.05
	Digital output (HART)	−50 to +85 °C (−58 to +185 °F)	0
	Digital output (PA/FF)	−40 to +85 °C (−40 to +185 °F)	0

1) PMP75: No diaphragm seal errors are taken into account. Diaphragm seal errors can be calculated separately in the Applicator diaphragm seal calculation module. Link to online tool Applicator: www.endress.com/applicator → Sizing Diaphragm Seal

PMP71/PMP75: electronics error $E2_E$ as % The specifications refer to the calibrated span/Upper Range Value (URV).			
Measuring cell	**Electronics**	**Temperature range**	**Error** [1]
	PMP71 with 1-5V DC	−3 to +53 °C (+27 to +127 °F)	0.18
	PMP71 with 1-5V DC	−40 to −4 °C (−40 to +25 °F) and +54 to +85 °C (+129 to +185 °F)	0,55

1) The additional electronics error that occurs in the temperature range −50 to −41 °C (−58 to −42 °F) is covered by $E2_{LT}$.

$E2_{LT}$ - low temperature error

PMP71/PMP75: low temperature error $E2_{LT}$ as % The specifications refer to the calibrated span/Upper Range Value (URV).		
Measuring cell	**Temperature range**	**Problem**
For all measuring cells	−40 to +85 °C (−40 to +185 °F)	0
	−50 to −41 °C (−58 to −42 °F)	1.5

Total error

Total error = total performance + long-term stability

Total performance as % of the set span with TD1:1 → 🗎 31

Long-term stability as % of the upper range limit (URL) → 🗎 31

PMP71: total error as % The specifications refer to the upper range limit (URL).						
Measuring cell	**Standard** [1]			**Platinum** [1]		
	1 year	**5 years**	**10 years**	**1 year**	**5 years**	**10 years**
400 mbar (6 psi)	± 0.23	± 0.25	± 0.28	± 0.22	± 0.24	± 0,27
1 bar (15 psi)	± 0.23	± 0.25	± 0.28	± 0.22	± 0.24	± 0,27
2 bar (30 psi)	± 0.25	± 0.30	± 0.33	± 0.24	± 0.29	± 0.32
4 bar (60 psi)	± 0.23	± 0.25	± 0.28	± 0.22	± 0.24	± 0,27
10 bar (150 psi)	± 0.17	± 0.19	± 0.22	± 0.16	± 0.18	± 0.21
40 bar (600 psi)	± 0.17	± 0.19	± 0.22	± 0.16	± 0.18	± 0.21
100 bar (1 500 psi)	± 0.18	± 0.20	± 0.23	± 0.18	± 0.20	± 0.23
400 bar (6 000 psi)	± 0.21	± 0.23	± 0.26	± 0.19	± 0.21	± 0.24
700 bar (10 500 psi)	± 0.21	± 0.23	± 0.26	± 0.19	± 0.21	± 0.24

1) The specification values apply to the temperature range per ±28 °C (50 °F) (corresponds to the range of −3 to +53 °C (+27 to +127 °F)) for all measuring cells. The specification values apply to the analog output (i.e. including electronics errors) and TD 1:1. The specifications values apply to gauge pressure and absolute pressure. The specification values apply to membrane material AISI 316L (1.4435), Alloy C 276.

Performance characteristics of PMC71 ceramic pressure transmitter (Sensor module + Electronic module)

Preamble

The performance characteristic of the transmitter refers to "Accuracy of the transmitter". The factors influencing accuracy can be divided into two groups
- Total performance of transmitter → 🗎 34
- Installation dependent influencing factors → 🗎 42

Total performance of transmitter

Transmitter total performance → 🗎 35 comprises the reference accuracy and the ambient temperature effect and is calculated using the following formula:

Total performance = $\pm\sqrt{(E1)^2 + (E2)^2}$

E1 = Reference accuracy → 🗎 34

E2 = ambient temperature effect per ±28 °C (50 °F) (corresponds to the range of −3 to +53 °C (+27 to +127 °F)) → 🗎 36

Reference accuracy [E1]

PMC71: Reference accuracy E1 as % [1]
The specifications refer to the calibrated span/Upper Range Value (URV).

Measuring cell	Standard Reference accuracy	Platinum Reference accuracy
100 mbar (1.5 psi)	▪ TD ≤ 10:1 = ±0.075 ▪ TD > 10:1 = ±0.0075 · TD	▪ TD 1:1 = ±0.05 ▪ TD > 1:1 = ±0.075
250 mbar (3.75 psi)	▪ TD ≤ 10:1 = ±0.075 ▪ TD > 10:1 = ±0.0075 · TD	TD ≥ 1:1 = ±0.05
400 mbar (6 psi)	▪ TD ≤ 10:1 = ±0.05 ▪ TD > 10:1 = ±0.005 · TD	TD ≥ 1:1 = ±0.035
1 bar (15 psi)	▪ TD ≤ 10:1 = ±0.05 ▪ TD > 10:1 = ±0.005 · TD	TD ≥ 1:1 = ±0.035
2 bar (30 psi)	▪ TD ≤ 10:1 = ±0.05 ▪ TD > 10:1 = ±0.005 · TD	▪ TD 1:1 = ±0.025 ▪ TD ≥ 1:1 = ±0.035
4 bar (60 psi)	▪ TD ≤ 10:1 = ±0.05 ▪ TD > 10:1 = ±0.005 · TD	TD ≥ 1:1 = ±0.025
10 bar (150 psi)	▪ TD ≤ 10:1 = ±0.05 ▪ TD > 10:1 = ±0.005 · TD	TD ≥ 1:1 = ±0.035
40 bar (600 psi)	▪ TD ≤ 10:1 = ±0.05 ▪ TD > 10:1 = ±0.005 · TD	TD ≥ 1:1 = ±0.035

1) Reference accuracy comprises the non-linearity [DIN EN 61298-2] including the hysteresis [DIN EN 61298-2] and the non-repeatability [DIN EN 61298-2] in accordance with the limit point method as per [DIN EN 60770]. Reference accuracy for standard up to TD 100:1, for platinum up to TD 5:1.

Total performance – Specification values

PMC71: total performance as % The specifications refer to the calibrated span/Upper Range Value (URV).										
Measuring cell	Standard [1]					Platinum [1]				
	TD 1:1	TD 2:1	TD 3:1	TD 4:1	TD 5:1	TD 1:1	TD 2:1	TD 3:1	TD 4:1	TD 5:1
100 mbar (1.5 psi)	±0.17	±0.24	±0.31	±0.38	±0.44	±0.17	±0.24	±0.31	±0.38	±0.44
250 mbar (3.75 psi)	±0.17	±0.24	±0.31	±0.38	±0.44	±0.17	±0.23	±0.30	±0.37	±0.44
400 mbar (6 psi)	±0.17	±0.23	±0.30	±0.37	±0.44	±0.16	±0.23	±0.30	±0.37	±0.44
1 bar (15 psi)	±0.14	±0.21	±0.17	±0.33	±0.40	±0.14	±0.20	±0.27	±0.33	±0.40
2 bar (30 psi)	±0.14	±0.21	±0.27	±0.33	±0.40	±0.14	±0.20	±0.27	±0.33	±0.40
4 bar (60 psi)	±0.14	±0.21	±0.27	±0.33	±0.40	±0.14	±0.20	±0.27	±0.33	±0.40
10 bar (150 psi)	±0.14	±0.21	±0.27	±0.33	±0.40	±0.14	±0.20	±0.27	±0.33	±0.40
40 bar (600 psi)	±0.14	±0.21	±0.27	±0.33	±0.40	±0.14	±0.20	±0.27	±0.33	±0.40

1) The specification values apply to the temperature range per ±28 °C (50 °F) (corresponds to the range of −3 to +53 °C (+27 to +127 °F)) for all measuring cells. The specification values apply to the analog output (i.e. including electronics errors). The specification values apply to gauge pressure and absolute pressure.

Long-term stability

PMC71: long-term stability as % The specifications refer to the upper range limit (URL).						
Measuring cell	Gauge pressure			Absolute pressure		
	1 year	5 years	10 years	1 year	5 years	10 years
100 mbar (1.5 psi)	± 0.05	± 0.08	± 0.10	± 0.05	± 0.15	± 0.20
250 mbar (3.75 psi)	± 0.05	± 0.08	± 0.10	± 0.05	± 0.15	± 0.20
400 mbar (6 psi)	± 0.05	± 0.08	± 0.10	± 0.05	± 0.15	± 0.20
1 bar (15 psi)	± 0.05	± 0.08	± 0.10	± 0.05	± 0.15	± 0.20
2 bar (30 psi)	± 0.05	± 0.08	± 0.10	± 0.05	± 0.15	± 0.20
4 bar (60 psi)	± 0.05	± 0.08	± 0.10	± 0.05	± 0.15	± 0.20
10 bar (150 psi)	± 0.05	± 0.08	± 0.10	± 0.05	± 0.15	± 0.20
40 bar (600 psi)	± 0.05	± 0.08	± 0.10	± 0.05	± 0.15	± 0.20

Detailed Performance Explanation and Calculation

To calculate the total performance outside the temperature range of −3 to +53 °C (+27 to +127 °F), please refer to the following sections: "Ambient temperature effect" and "Calculating the total performance".

PMC71 standard version - Ambient temperature effect [E2]

- $E2 = (E2_M \cdot CF_1) + 0.05$
- $E2_M$ = Main temperature error
- CF_1 = Temperature range correction factor

$E2_M$ - Main temperature error

The output changes due to the effect of ambient temperature [IEC 61298-3] with respect to reference temperature [DIN 16086]. The values specify the maximum error due to min./max. ambient or process temperature conditions.

PMC71: main temperature error $E2_M$ as % per ±28 °C (50 °F) (corresponds to the range of −3 to +53 °C (+27 to +127 °F)) The specifications refer to the calibrated span/Upper Range Value (URV).		
Measuring cell	**Standard**	**Platinum**
100 mbar (1.5 psi)	± (0.07 · TD + 0.038)	± (0.07 · TD + 0.038)
250 mbar (3.75 psi)	± (0.07 · TD + 0.038)	± (0.07 · TD + 0.038)
400 mbar (6 psi)	± (0.07 · TD + 0.038)	± (0.07 · TD + 0.038)
1 bar (15 psi)	± (0.065 · TD + 0.02)	± (0.065 · TD + 0.02)
2 bar (30 psi)	± (0.065 · TD + 0.02)	± (0.065 · TD + 0.02)
4 bar (60 psi)	± (0.065 · TD + 0.02)	± (0.065 · TD + 0.02)
10 bar (150 psi)	± (0.065 · TD + 0.02)	± (0.065 · TD + 0.02)
40 bar (600 psi)	± (0.065 · TD + 0.02)	± (0.065 · TD + 0.02)

CF_1 - Temperature range correction factor

PMC71: correction factor CF_1		
Measuring cell	**Temperature range**	**Factor, CF_1**
100 mbar (1.5 psi) 250 mbar (3.75 psi) 400 mbar (6 psi) 1 bar (15 psi) 2 bar (30 psi) 4 bar (60 psi) 10 bar (150 psi) 40 bar (600 psi)	25 °C ± 28 °C (−3 to +53 °C (+27 to +127 °F))	1
	−20 to −4 °C (−4 to +25 °F) and +54 to +82 °C (+129 to +180 °F)	2.4
	+83 to +125 °C (+181 to +257 °F)	2.4

PMC71 high-temperature version - Ambient temperature effect [E2]

- E2 = $E2_M$
- $E2_M$ = Main temperature error

$E2_M$ - Main temperature error

The output changes due to the effect of ambient temperature [IEC 61298-3] with respect to reference temperature [DIN 16086]. The values specify the maximum error due to min./max. ambient or process temperature conditions.

PMC71 high-temperature version: main temperature error $E2_M$ as % for −10 to +60 °C (+14 to +140 °F) The specifications refer to the calibrated span/Upper Range Value (URV).		
Measuring cell	**Standard**	**Platinum**
100 mbar (1.5 psi)	± (0.088 · TD + 0.088)	± (0.088 · TD + 0.088)
250 mbar (3.75 psi)	± (0.088 · TD + 0.088)	± (0.088 · TD + 0.088)
400 mbar (6 psi)	± (0.088 · TD + 0.088)	± (0.088 · TD + 0.088)
1 bar (15 psi)	± (0.088 · TD + 0.04)	± (0.088 · TD + 0.04)
2 bar (30 psi)	± (0.088 · TD + 0.04)	± (0.088 · TD + 0.04)
4 bar (60 psi)	± (0.088 · TD + 0.04)	± (0.088 · TD + 0.04)
10 bar (150 psi)	± (0.088 · TD + 0.04)	± (0.088 · TD + 0.04)
40 bar (600 psi)	± (0.088 · TD + 0.04)	± (0.088 · TD + 0.04)

PMC71 high-temperature version: main temperature error $E2_M$ as % for +60 to +150 °C (+140 to +302 °F) The specifications refer to the calibrated span/Upper Range Value (URV).				
Measuring cell	**Standard**		**Platinum**	
	Gauge pressure	**Absolute pressure**	**Gauge pressure**	**Absolute pressure**
100 mbar (1.5 psi)	± (0.75 · TD)	± (1.25 · TD)	± (0.75 · TD)	± (1.25 · TD)
250 mbar (3.75 psi)	± (0.75 · TD)	± (0.75 · TD)	± (0.75 · TD)	± (0.75 · TD)
400 mbar (6 psi)	± (0.75 · TD)	± (0.75 · TD)	± (0.75 · TD)	± (0.75 · TD)
1 bar (15 psi)	± (0.50 · TD)	± (0.75 · TD)	± (0.50 · TD)	± (0.75 · TD)
2 bar (30 psi)	± (0.50 · TD)	± (0.75 · TD)	± (0.50 · TD)	± (0.75 · TD)
4 bar (60 psi)	± (0.50 · TD)	± (0.75 · TD)	± (0.50 · TD)	± (0.75 · TD)
10 bar (150 psi)	± (0.50 · TD)	± (0.75 · TD)	± (0.50 · TD)	± (0.75 · TD)
40 bar (600 psi)	± (0.50 · TD)	± (0.50 · TD)	± (0.50 · TD)	± (0.50 · TD)

Total error

Total error = total performance + long-term stability

Total performance as % of the set span with TD1:1 → 🗎 35

Long-term stability as % of the upper range limit (URL) → 🗎 35

PMC71: total error as % The specifications refer to the upper range limit (URL).						
Measuring cell	Gauge pressure - Standard [1]			Gauge pressure - platinum [1]		
	1 year	5 years	10 years	1 year	5 years	10 years
100 mbar (1.5 psi)	± 0.225	± 0.255	± 0.275	± 0.216	± 0.246	± 0.266
250 mbar (3.75 psi)	± 0.225	± 0.255	± 0.275	± 0.216	± 0.246	± 0.266
400 mbar (6 psi)	± 0.216	± 0.246	± 0.266	± 0.212	± 0.242	± 0.262
1 bar (15 psi)	± 0.194	± 0.224	± 0.244	± 0.189	± 0.219	± 0.239
2 bar (30 psi)	± 0.194	± 0.224	± 0.244	± 0.187	± 0.217	± 0.237
4 bar (60 psi)	± 0.194	± 0.224	± 0,240	± 0.187	± 0.217	± 0.237
10 bar (150 psi)	± 0.194	± 0.224	± 0.244	± 0.189	± 0.219	± 0.239
40 bar (600 psi)	± 0.194	± 0.224	± 0.244	± 0.189	± 0.219	± 0.239

1) The specification values apply to the temperature range per ±28 °C (50 °F) (corresponds to the range of −3 to +53 °C (+27 to +127 °F)) for all measuring cells. The specification values apply to the analog output (i.e. including electronics errors). The specification values apply to the standard version of the PMC71.

PMC71: total error as % The specifications refer to the upper range limit (URL).						
Measuring cell	Absolute pressure - Standard [1]			Absolute pressure - Platinum [1]		
	1 year	5 years	10 years	1 year	5 years	10 years
100 mbar (1.5 psi)	± 0.225	± 0.325	± 0.375	± 0.216	± 0.316	± 0.366
250 mbar (3.75 psi)	± 0.225	± 0.325	± 0.375	± 0.216	± 0.316	± 0.366
400 mbar (6 psi)	± 0.216	± 0.316	± 0.366	± 0.212	± 0.312	± 0.362
1 bar (15 psi)	± 0.194	± 0.294	± 0.344	± 0.189	± 0.289	± 0.339
2 bar (30 psi)	± 0.194	± 0.294	± 0.344	± 0.187	± 0.287	± 0.337
4 bar (60 psi)	± 0.194	± 0.294	± 0.344	± 0.187	± 0.287	± 0.337
10 bar (150 psi)	± 0.194	± 0.294	± 0.344	± 0.189	± 0.289	± 0.339
40 bar (600 psi)	± 0.194	± 0.294	± 0.344	± 0.189	± 0.289	± 0.339

1) The specification values apply to the temperature range per ±28 °C (50 °F) (corresponds to the range of −3 to +53 °C (+27 to +127 °F)) for all measuring cells. The specification values apply to the analog output (i.e. including electronics errors). The specification values apply to the standard version of the PMC71.

Performance characteristics - calculation example and additional information

Calculating the total performance in 4 steps

Data (example with PMP71)

Measuring Conditions / Device configuration	
Measuring range (URV)	5 bar (75 psi)
Min./max. temp. pressure transmitter (ambient/process)	Ambient temp.:0 to 45 °C (32 to 113 °F) Max. Process temp.:50 °C (122 °F)
Membrane material	AISI 316L
Reference accuracy (± 0.05%)	Standard
PMP71 - Suitable measuring cell (upper range limit, URL)	10 bar (150 psi) with TD 2:1
Output Signal	4 to 20 mA

Formula

Total performance	=	$\pm \sqrt{(E1)^2 + (E2)^2}$
E1	=	Reference accuracy → 🗎 30
E2	=	Ambient temperature effect per ±28 °C (50 °F) (corresponds to the range of −3 to +53 °C (+27 to +127 °F)) → 🗎 32

Calculation

Step 1: Calculating the turn down → 🗎 7		
Turn down (TD) = URL/ | URV - LRV |	=	10 bar (150 psi)/5 bar (75 psi)
	=	TD = 2:1
Step 2: Calculating the reference accuracy (E1) → 🗎 30		
For the measuring conditions,		
Reference accuracy, E1	=	± 0.05 (% of the set span)
	=	± (0.05/100) · 5 bar (75 psi)
	=	±0.0025 bar (0.03625 psi)
	E1 =	± 0.05 (% of the set span)
	(or)	±0.0025 bar (0.03625 psi)

Step 3: Calculation of the ambient temperature effect [$E2 = (E2_M \cdot CF_1) + E2_E + E2_{LT}$] → 32

For the measuring conditions, Main temperature error, $E2_M$	=	± (0.03 · TD + 0.03) % of the set span
Temperature correction factor, CF_1	=	1
Electronics error , $E2_E$	=	0.05 %
Low temperature error $E2_{LT}$	=	0 %
Ambient temperature effect, E2	=	± |(0.03 · TD + 0.03) · 1| + 0.05 + 0
	=	± |(0.03 · 2 + 0.03) · 1| + 0.05 + 0
	=	± 0.14 (% of the set span)
	=	± (0.14/100) · 5 bar (75 psi)
	=	±0.007 bar (0.1015 psi)
	E2 =	± 0.14 (% of the set span)
	(or)	±0.007 bar (0.1015 psi)

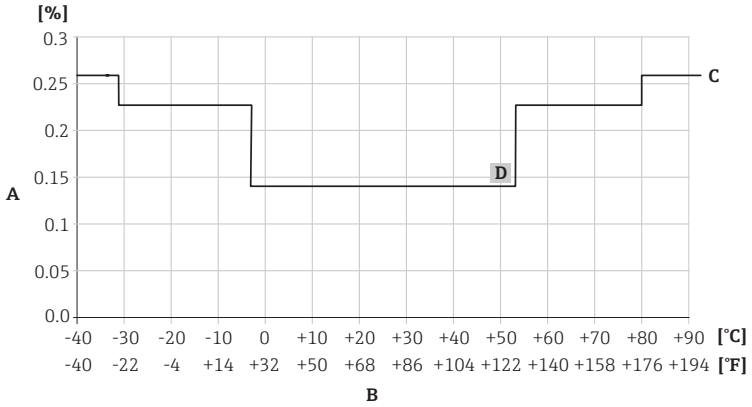

A Error (% of the set span)
B Temperature
C 316L process isolating diaphragm
D Ambient temperature effect: 0.14 (% of the set span)

Step 4: Calculation of the total performance

Total performance	=	$\pm \sqrt{((E1)^2 + (E2)^2)}$
		E1 = Reference accuracy E2 = Ambient temperature effect per ±28 °C (50 °F) (corresponds to the range of −3 to +53 °C (+27 to +127 °F))
Total performance, if calculated in mbar	=	$\pm \sqrt{((0.0025)^2 + (0.007)^2)}$
	=	± 0.0074 bar (0.1073 psi) or 7.4 mbar (0.1073 psi)
	~	0.149 % of 5 bar (75 psi)
	(or)	
Total performance, if calculated in % of the upper range limit	=	$\pm \sqrt{((0.05)^2 + (0.14^2))}$
	=	± 0.149 (% of the set span)
Total performance	=	± 0.149 (% of the set span)
	(or)	±0.0074 bar (0.1073 psi)

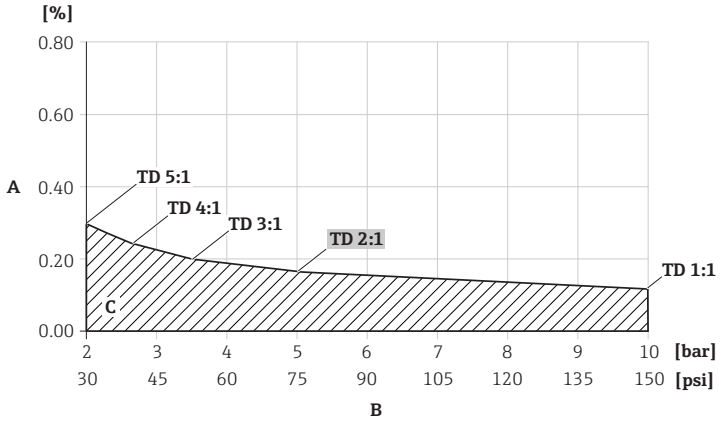

A Error (% of the set span)
B Set span [bar]
C Standard measuring cell

Installation factors

Some of the influencing factors are:
- Influence of installation position → 🗎 42
- Uncertainty of measurement for small absolute pressure ranges → 🗎 42

Influence of installation position

- PMP71: Device rotated 180°, process connection pointing upwards. The value is doubled for devices with inert oil.
  - Process connection thread G 1 A, G 1 ½, G 2, 1 ½ MNPT, 2 MNPT, M 44x1.25, EN/DIN, ASME and JIS flanges: ≤ 10 mbar (0.15 psi).
  - Process connection thread: G ½, ½ MNPT, JIS G ½, JIS R ½, M20x1.5: ≤ 4 mbar (0.06 psi).
- PMC71: ≤ 0.18 mbar (0.003 psi). Device rotated 180°, process connection pointing upwards.

A position-dependent zero point shift can be corrected. Please refer to operating instructions and chapter Commissioning → Position adjustment.

Different tightening torques (e.g. for Clamp or Varivent connections) can merely cause a shift in the zero point. This effect is corrected by position adjustment during commissioning.

Uncertainty of measurement for small absolute pressure ranges

The smallest expanded uncertainty of measurement that can be returned by our calibration standards is:
- in the range 1 to 30 mbar (0.0145 to 0.435 psi): 0.4 % of (current) reading
- in the range < 1 mbar (0.0145 psi): 1 % of (current) reading.

Performance Characteristics Conformance

All performance characteristics are in conformance to ≥ ± 3 sigma.

Resolution

Current output: 1 µA

Voltage output: 1 mW

Warm-up period

- 4 to 20 mA HART: < 10 s
- PROFIBUS PA: 6 s
- FOUNDATION Fieldbus: 50 s

Reference operating conditions

- As per IEC 60770
- Ambient temperature T_A = constant, in the range +21 to +33 °C (+70 to +91 °F)
- Humidity φ = constant, in the range: 5 to 80 % RH ± 5 %
- Ambient pressure p_A = constant, in range: 860 to 1060 mbar (12.47 to 15.37 psi)
- Position of measuring cell: horizontal ±1° (see also "Influence of installation position" section→ 🗎 42)
- Input of LOW SENSOR TRIM and HIGH SENSOR TRIM for lower range value and upper range value
- Zero based span
- Membrane material PMC71: Al_2O_3 aluminum oxide ceramic FDA, ultrapure 99.9 %
- Membrane material PMP71/PMP75: AISI 316L (1.4435) or Alloy C
- Filling oil PMP71/PMP75: silicone oil
- Supply voltage: 24 V DC ±3 V DC
- Load with HART: 250 Ω
- Turn down (TD) = URL/ | URV - LRV |

Installation

General installation instructions

- For PMP75: → 🗎 110 "Installation instructions" section.
- A position-dependent zero point shift can be corrected directly at the device via operating keys, and also in hazardous areas in the case of devices with external operation.
  Diaphragm seals also shift the zero point, depending on the installation position → 🗎 113.
- The device housing can be rotated up to 380° .
- Endress+Hauser offers a mounting bracket for installing the device on pipes or walls → 🗎 44.
- Use flushing rings for flange and cell diaphragm seals if buildup or clogging can be expected at the diaphragm seal connection. The flushing ring can be fitted between the process connection and diaphragm seal. Material buildup in front of the process isolating diaphragm can be flushed away, and the pressure chamber vented, via the two lateral flushing holes.
- When measuring in media containing solids, such as dirty liquids, installing separators and drain valves is useful for capturing and removing sediment.
- Point the cable and connector downwards where possible to prevent moisture from entering (e.g. rain or condensation water).

Measuring arrangement for devices without diaphragm seals – PMC71, PMP71

Cerabar S devices without diaphragm seals are mounted in accordance with the same guidelines as a manometer (DIN EN 837-2). We recommend the use of shutoff devices and siphons. The orientation depends on the measuring application.

Pressure measurement in gases

Mount the Cerabar S with shutoff device above the tapping point so that any condensate can flow into the process.

Pressure measurement in vapors

Use siphons for pressure measurement in steam. The siphon reduces the temperature to almost ambient temperature. Fill the siphon with liquid before commissioning. Preferably mount the Cerabar S with the siphon below the tapping point.

Advantages:
- defined water column only causes minimal/negligible measured errors
- only minimal/negligible thermal effects on the device

Mounting above the tapping point is also possible. Note the max. permitted ambient temperature of the transmitter!

Pressure measurement in liquids

Mount the Cerabar S with shutoff device below or at the same level as the tapping point.

Level measurement

- Mount the Cerabar S below the lowest measuring point.
- Do not install the device in the following positions: In the filling curtain, in the tank outlet or at a point in the container which could be affected by pressure pulses from an agitator or a pump.
- The calibration and functional test can be carried out more easily if you mount the device downstream from a shutoff device.

Measuring arrangement for devices with diaphragm seals – PMP75

→ 🗎 110

Orientation

The orientation may cause a zero point shift, see → 🗎 42.

This position-dependent zero point shift can be corrected directly at the device via the operating key, and also in hazardous areas in the case of devices with external operation (position adjustment).

Wall and pipe mounting, transmitter (optional)

Endress+Hauser offers the following mounting bracket for installing the device on pipes or walls:

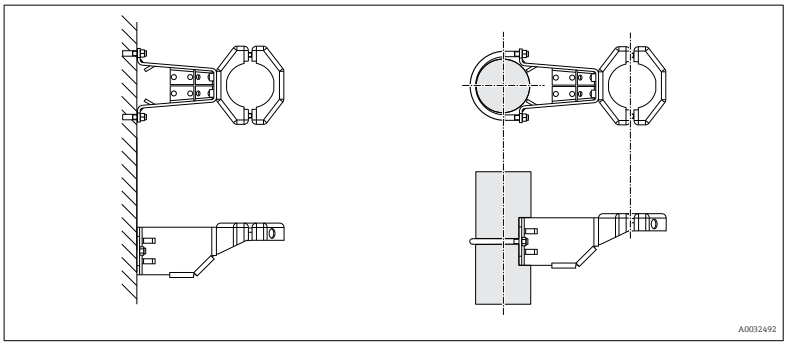

Ordering information:
- Product Configurator, order code for "Accessories enclosed", option "PA"
- For devices with separate housing (can be ordered using the order code "Additional options 2") included in the scope of delivery
- Can be ordered as a separate accessory (part no.: 71102216).

For further details, see → 🗎 97.

Wall and pipe mounting, valve manifold (optional)

For the technical data (such as the dimensions or order numbers for screws), see the document SD01553P/00/EN.

Ordering information:

Product Configurator, order code for "Accessories enclosed", option "PK"

Heat insulation – PMC71 high-temperature version

The PMC71 high-temperature version must only be insulated up to a certain height. The maximum permitted insulation height is indicated on the devices and applies to an insulation material with a heat conductivity ≤ 0.04 W/(m x K) and to the maximum permitted ambient and process temperature (see table below). The data were determined under the most critical application "quiescent air".

The data were determined under the most critical application "quiescent air".

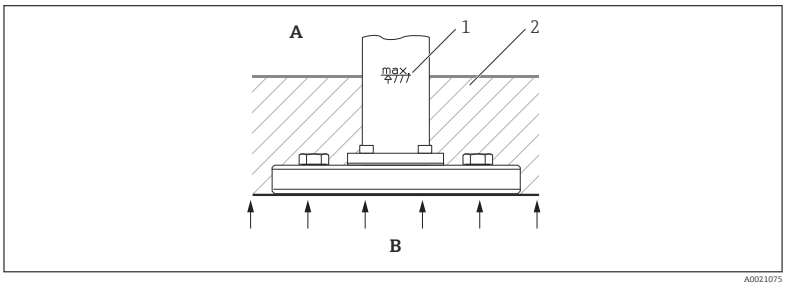

A0021075

A Ambient temperature
B Process temperature
1 Insulation height
2 Insulation material

	Temperature
Ambient temperature	≤ 70 °C (158 °F)
Process temperature	≤ 150 °C (302 °F)

Mounting of PVDF screw-in fittings

WARNING

Risk of damage to process connection!

Risk of injury!

- PVDF process connections with threaded connections must be installed with the enclosed mounting bracket!

The mounting bracket can be installed on pipes with a diameter of 1¼" to 2" or on walls.

Dimensions → 🗎 54.

"Separate housing" version

With the "separate housing" version, you are able to mount the housing with the electronics insert at a distance from the measuring point. This version facilitates trouble-free measurement
- Under particularly difficult measuring conditions (at installation locations that are cramped or difficult to access)
- If rapid cleaning of the measuring point is required and
- If the measuring point is exposed to vibrations.

You can choose between different cable versions:
- PE: 2 m (6.6 ft), 5 m (16 ft) and 10 m (33 ft)
- FEP: 5 m (16 ft).

Ordering information: Product Configurator, order code for "Additional options 2", version "G".

Dimensions → 🗎 97

In the case of the "separate housing" version, the sensor is delivered with the process connection and cable ready mounted. The housing and a mounting bracket are enclosed as separate units. The cable is provided with a socket at both ends. These sockets are simply connected to the housing and the sensor.

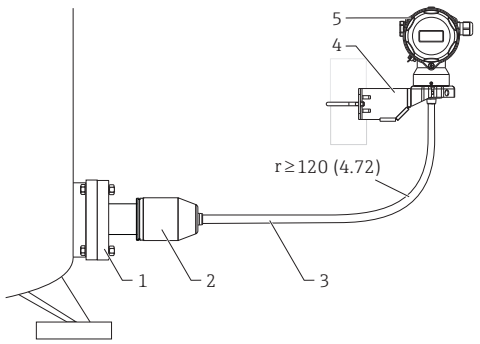

1 *Process connection with sensor - For degrees of protection, see the following section*
2 *Process connection adapter (weight: 0.93 kg (2.05 lb))*
3 *Cable (weight: 0.05 kg/meter (0.11 lb)), both ends are fitted with a socket*
4 *Mounting bracket provided, suitable for pipe and wall mounting*
5 *Housing with electronic insert - degrees of protection → 🗎 55*

Engineering unit mm (in)

Degree of protection for the process connection and sensor with the use of
- FEP cable:
  - IP 69 [2)]
  - IP 66 NEMA 4/6P
  - IP 68 (1.83 mH_2O for 24 h) NEMA 4/6P
- PE cable:
  - IP 66 NEMA 4/6P
  - IP 68 (1.83 mH_2O for 24 h) NEMA 4/6P

Technical data of the PE and FEP cable:
- Minimum bending radius: 120 mm (4.72 in)
- Cable extraction force: max. 450 N (101.16 lbf)
- Resistance to UV light

Use in hazardous area:
- Intrinsically safe installations (Ex ia/IS)
- FM/CSA IS: for Div. 1 installation only

2) Designation of the IP protection class according to DIN EN 60529. Previous designation "IP69K" according to DIN 40050 Part 9 is no longer valid (standard withdrawn on November 1, 2012). The tests required by both standards are identical.

Reduction of the installation height

If the separate housing is used, the installation height of the process connection is reduced compared to the dimensions of the standard version.

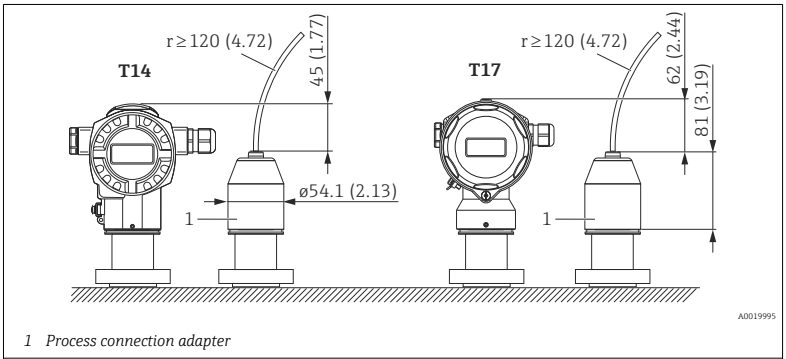

1 Process connection adapter

Engineering unit mm (in)

Turning the housing

The housing can be rotated up to 380° by loosening the Allen screw.

Your benefits

- Easy mounting due to optimum alignment of housing
- Good, accessible device operation
- Optimum readability of the onsite display (optional).

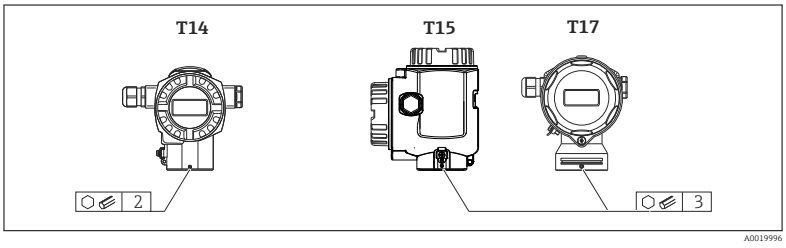

Oxygen applications

Oxygen and other gases can react explosively to oils, grease and plastics, such that, among other things, the following precautions must be taken:
- All components of the system, such as measuring devices, must be cleaned in accordance with the BAM (DIN 19247) requirements.
- Dependent on the materials used, a certain maximum temperature and a maximum pressure for oxygen applications must not be exceeded.

The devices suitable for gaseous oxygen applications are listed in the following table with the specification p_{max}.

HB = Cleaned for oxygen service

Order code for devices [1], cleaned for oxygen applications	p_{max} for oxygen applications	T_{max} for oxygen applications
PMC71 – * * * * * * * * 2 * * or PMC71 – * * * * * * * * A * * HB, Devices with sensors, nominal value < 10 bar (150 psi)	Over pressure limit (OPL) [2] [3] of sensor	60 °C (140 °F)
PMC71 – * * * * * * * * 2 * *, PMC71 – * * * * * * * * A * * HB, Devices with sensors, nominal value ≥ 10 bar (150 psi)	60 bar (900 psi)	60 °C (140 °F)
PMP71 – * * * * * * * * * N * * or PMP71 – * * * * * * * * * F * * HB	depends on the lowest-rated element, with regard to pressure, of the selected components: over pressure limit (OPL) of the sensor, process connection (1.5 x PN) or fill fluid (160 bar (2 400 psi))	85 °C (185 °F)
PMP75 – * * * * * * * * * * N * * or PMP75 – * * * * * * * * * * F * * HB	depends on the lowest-rated element, with regard to pressure, of the selected components: over pressure limit (OPL) of the sensor, process connection (1.5 x PN) or fill fluid (160 bar (2 400 psi))	85 °C (185 °F)

1) Devices only, not accessories or enclosed accessories.
2) Product Configurator, order code for "Sensor range; sensor over pressure limit (= OPL)"
3) PMC71 with PVDF threaded connection: Only mount with the enclosed mounting bracket. MWP 10 bar (150 psi), OPL max. 15 bar (225 psi). Process temperature range−10 to +60 °C (+14 to +140 °F)

PWIS-free applications

Special cleaning of the transmitter to remove paint-wetting substances, for use in paint shops, for instance.

Ordering information:

Product Configurator, order code for "Seal", option "L" or "M".

Ultrapure gas applications

Endress+Hauser also offers devices for special applications, such as ultrapure gas, cleaned from oil and grease. No special restrictions regarding the process conditions apply to these devices.

Ordering information:
- Product Configurator, order code for "Seal" or
- Product Configurator, order code for "Fill fluid".

Applications with hydrogen

A **ceramic** process isolating diaphragm or a **gold-plated** metal process isolating diaphragm offers universal protection against hydrogen diffusion, both in gas applications and in applications with aqueous solutions.

Applications with hydrogen in aqueous solutions

A **gold/rhodium-plated** metal process isolating diaphragm (AU/Rh) offers effective protection against hydrogen diffusion.

Environment

Ambient temperature range

Version	PMC71 High-temperature version	PMC71	PMP71	PMP75
Without LCD display	−20 to +70 °C (−4 to +158 °F)	−40 to +85 °C (−40 to +185 °F)	−50 to +85 °C (−58 to +185 °F) [1]	
With LCD display [2]		−20 to +70 °C (−4 to +158 °F)		
With M12 connector, elbowed		−25 to +85 °C (−13 to +185 °F)		
With separate housing	–	−20 to +60 °C (−4 to +140 °F)		–
Diaphragm seal systems [3]	–	–	–	→ 🗎 110
MID parts certificate	–	–	−25 to +55 °C (−13 to +131 °F)	–

1) If the temperature is below −40 °C (−40 °F), chances of failure increases. Product Configurator, order code for "Test, certificate" option "JN".
2) Extended temperature application range (−50 to +85 °C (−58 to +185 °F)) with restrictions in optical properties, such as display speed and contrast
3) Ambient temperature range and process temperature range are mutually dependent - see "Heat insulation" section → 🗎 114

For high-temperature applications, either a PMP75 with a temperature isolator or with a capillary can be used. If vibrations also occur in the application, Endress+Hauser recommends using a PMP75 with a capillary. If a PMP75 with a temperature isolator or capillary is used, we recommend a suitable bracket for mounting (see "Wall and pipe mounting" section).→ 🗎 44

Hazardous areas

- For devices for use in hazardous areas, see Safety Instructions, Installation or Control Drawing→ 🗎 127.
- Pressure measuring devices that have the usual explosion protection certificates (e.g. ATEX-/ CSA-/ FM-/ IEC Ex,...) can be used in hazardous areas at ambient temperatures down to −50 °C (−58 °F). The functionality of the explosion protection is also guaranteed for ambient temperatures down to −50 °C (−58 °F).

Storage temperature range

- −40 to +90 °C (−40 to +194 °F)
- Local display: −40 to +85 °C (−40 to +185 °F)
- Separate housing:−40 to +60 °C (−40 to +140 °F)
- Devices with PVC-sheathed capillary: −25 to +90 °C (−13 to +194 °F)

Degree of protection

Depends on the deployed
- Housing → 🗎 55
- Separate housing → 🗎 46

Climate class

Class 4K4H (air temperature: −20 to +55 °C (−4 to +131 °F), relative humidity: 4 to 100 %) fulfilled as per DIN EN 60721-3-4 (condensation possible. With PMC71, avoid condensate in the device.)

Electromagnetic compatibility

- Electromagnetic compatibility as per EN 61326 and NAMUR recommendation EMC (NE21).
- With enhanced immunity against electromagnetic fields as per EN 61000-4-3: 30 V/m with closed cover (for devices with T14 housing)
  Increased interference immunity with 30 V/m not available for 1-5V DC. EMC interference immunity for 1-5V DC: 10 V/m
- Maximum deviation: < 0.5 % of span
- All EMC measurements were performed with a turn down (TD) = 2:1.
- Class E3 as per OIML R75-2

For further details refer to the Declaration of Conformity.

Vibration resistance

Device/accessory	Test standard	Vibration resistance
PMC71 [1]	GL	Guaranteed for 3 to 25 Hz: ±1.6 mm (0.063 in); 25 to 100 Hz: 4 g in all 3 planes
PMP71		
PMP75 [2] [3]		
With mounting bracket	IEC 61298-3	Guaranteed for 10 to 60 Hz: ±0.15 mm (0.0059 in); 60 to 500 Hz: 2 g in all 3 planes
PMP71 with MID parts certificate	OIML R117-1	Class M3

1) Not for high-temperature version with Ex d[ia], CSA XP or FM XP
2) With aluminum T14 housing only
3) For applications with very high temperatures, a PMP75 with either a temperature isolator or a capillary can be used. If vibrations also occur in the application, Endress+Hauser recommends using a PMP75 with a capillary. If a PMP75 with a temperature isolator or capillary is used, it must be mounted with a mounting bracket

Process

Process temperature limits

For oxygen applications, observe → 48

PMC71 (with ceramic process isolating diaphragm)

- −25 to +125 °C (−13 to +257 °F)
- High-temperature version: −25 to +150 °C (−13 to +302 °F); Product Configurator, order code for "Additional options 1", version "T".
- For saturated steam applications, use a device with a metal process isolating diaphragm, or provide a siphon for temperature isolation when installing.
- Observe the process temperature range of the seal in the following table.

Seal	Notes	Process temperature range	Option [1]
FKM Viton	–	−25 to +125 °C (−13 to +257 °F)/ 150 °C (302 °F) [2]	A, L
EPDM	FDA 21CFR177.2600; 3A Class II; USP Class VI DVGW (KTW, W270, W534), WRAS, ACS, NSF61	−20 to +125 °C (−4 to +257 °F)/ 150 °C (302 °F) [2]	B
FFKM Perlast G75LT	–	−20 to +125 °C (−4 to +257 °F)/ 150 °C (302 °F) [2]	C
Kalrez, Compound 4079	–	+5 to +125 °C (+41 to +257 °F)/ 150 °C (302 °F) [2]	D, M
Chemraz, Compound 505	–	−10 to +125 °C (+14 to +257 °F)/ 150 °C (302 °F) [2]	E
HNBR	FDA 21CFR177.2600; 3A Class II; KTW; AFNOR; BAM	−25 to +125 °C (−13 to +257 °F)	F [3]
NBR	–	−10 to +100 °C (+14 to +212 °F)	F
FKM Viton	FDA 21CFR177.2600	−5 to +125 °C (+23 to +257 °F)	G
FKM Viton	cleaned of oil and grease	−10 to +125 °C (+14 to +257 °F)/ 150 °C (302 °F) [2]	1
FKM Viton	cleaned for oxygen service	−10 to +60 °C (+14 to +140 °F)	2 or A [4]
The process temperature ranges specified here refer to permanent application of the PMC71. They may be exceeded for a short time (e.g. for cleaning).			

1) Product Configurator, order code for "Seal"
2) 150 °C (302 °F) for high-temperature version
3) These seals are used for devices with 3A-approved process connections.
4) with option "HB", see Product Configurator, order code for "Service"

Applications with jumps in temperature

Extreme jumps in temperature can result in temporary measuring errors. Temperature compensation takes effect after several minutes. Internal temperature compensation is faster the smaller the jump in temperature and the longer the time interval involved.

For further information please contact your local Endress+Hauser Sales Center.

PMP71 (with metallic process isolating diaphragm)

Designation	Limits
Process connections with internal process isolating diaphragm	−40 to +125 °C (−40 to +257 °F) (150 °C (302 °F) for max. one hour)
Process connections with flush-mounted process isolating diaphragm,	−40 to +100 °C (−40 to +212 °F)

PMP71 (with metallic process isolating diaphragm) with MID parts certificate

−25 to +55 °C (−13 to +131 °F)

PMP75 (with diaphragm seal)

- Depending on the design and depending on the diaphragm seal and filling oil: −70 °C (−94 °F) up to +400 °C (+752 °F). Observe temperature application limits of diaphragm seal oil → 🗎 113.
- Please observe the maximum gauge pressure and maximum temperature.

Devices with PTFE-coated process isolating diaphragm

The non-stick coating has excellent gliding properties and is used to protect the process isolating diaphragm against abrasive media.

NOTICE

Incorrect use of the PTFE foil will destroy the device!

▶ The PTFE foil used is designed to protect the unit against abrasion. It does not provide protection against corrosive media.

For the range of application of the 0.25 mm (0.01 in) PTFE foil on an AISI 316L (1.4404/1.4435) process isolating diaphragm, see the following diagram:

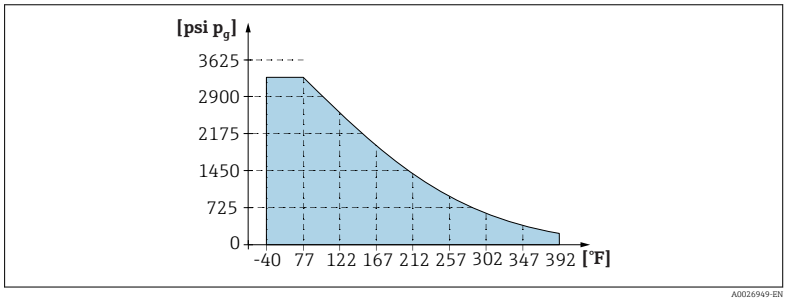

A0026949-EN

For vacuum applications: p_{abs} ≤ 1 bar (14.5 psi) to 0.05 bar (0.725 psi) up to max. +150 °C (302 °F).

Process temperature limits of capillary armoring: PMP75

- 316L: No restrictions
- PTFE: No restrictions
- PVC: See the following diagram

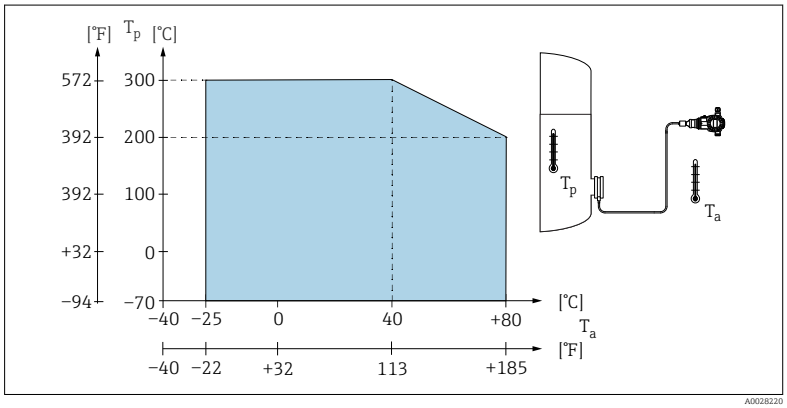

A0028220

Pressure specifications

WARNING

The maximum pressure for the measuring device depends on the lowest-rated element with regard to pressure.

- For pressure specifications, see the "Measuring range" section and the "Mechanical construction" section.
- The measuring device must be operated only within the specified limits!
- MWP (maximum working pressure): The MWP (maximum working pressure) is specified on the nameplate. This value refers to a reference temperature of +20 °C (+68°F) and may be applied to the device for an unlimited time. Observe temperature dependency of the MWP. The pressure values permitted at higher temperatures can be found in the standards EN 1092-1: 2001 Tab. 18 (With regard to their stability-temperature property, the materials 1.4435 and 1.4404 are grouped together under 13EO in EN 1092-1 Tab. 18. The chemical composition of the two materials can be identical.), ASME B 16.5a – 1998 Tab. 2-2.2 F316, ASME B 16.5a – 1998 Tab. 2.3.8 N10276, JIS B 2220.
- The test pressure corresponds to the over pressure limit of the individual sensors (OPL = 1.5 x MWP (formula does not apply to the PMP71 or PMP75 with a 40 bar (600 psi) or 100 bar (1500 psi) measuring cell)) and may be applied only for a limited period of time to prevent any lasting damage.
- The Pressure Equipment Directive (2014/68/EU) uses the abbreviation "PS". The abbreviation "PS" corresponds to the MWP (maximum working pressure) of the measuring device.
- In the case of sensor range and process connections where the over pressure limit (OPL) of the process connection is smaller than the nominal value of the sensor, the device is set at the factory, at the very maximum, to the OPL value of the process connection. If you want to use the entire sensor range, select a process connection with a higher OPL value (1.5 x PN; MWP = PN)
- In oxygen applications, the values for "p_{max} and T_{max} for oxygen applications must not be exceeded→ 🗎 48.
- Devices with ceramic process isolating diaphragm: avoid steam hammering! Steam hammering can cause zero point drifts. Recommendation: Residue (water droplets or condensation) may remain on the process isolating diaphragm following SIP cleaning and can result in local steam hammering the next time steam cleaning takes place. In practice, drying the process isolating diaphragm (e.g. by blowing) has proved to prevent steam hammering.

Mechanical construction

Device height

The device height is calculated from
- the height of the housing
- the height of optional mounted parts such as temperature isolators or capillaries
- the height of the relevant process connection.

The individual heights of the components can be found in the following sections. To calculate the device height, simply add up the individual heights of the components. If necessary, the installation space (the space used to install the device) must also be taken into account. You can use the following table for this:

Section	Page	Height	Example
Height of housing	→ 🗎 55 ff.	(A)	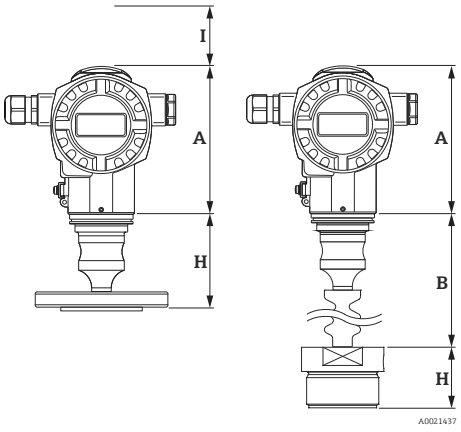
Optional mounted parts	→ 🗎 59	(B)	
Process connections	→ 🗎 59	(H)	
Installation space	-	(I)	
Device height			

T14 housing, optional display on the side

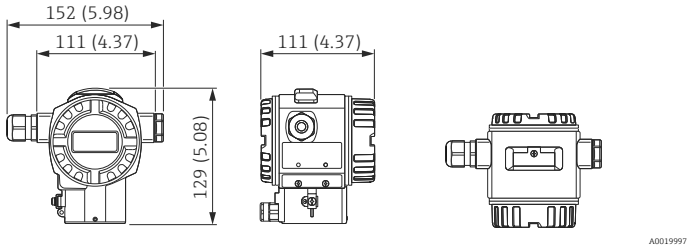

Engineering unit mm (in). Front view, left-hand side view, top view

Material		Degree of protection	Cable entry	Weight in kg (lb)		Option [1]
Housing	Cover seal			with display	without display	
Aluminum	EPDM	IP66/67 NEMA 6P	M20 gland	1.2 (2.65)	1.1 (2.43)	A
		IP66/67 NEMA 6P	G ½" thread			B
		IP66/67 NEMA 6P	NPT ½" thread			C
		IP66/67 NEMA 6P	M12 plug			D
		IP66/67 NEMA 6P	7/8" plug			E
		IP65 NEMA 4	HAN7D plug 90 degrees			F
316L	EPDM	IP66/67 NEMA 6P	M20 gland	2.1 (4.63)	2.0 (4.41)	1
		IP66/67 NEMA 6P	G ½" thread			2
		IP66/67 NEMA 6P	NPT ½" thread			3
		IP66/67 NEMA 6P	M12 plug			4
		IP66/67 NEMA 6P	7/8" plug			5
		IP65 NEMA 4	HAN7D plug 90 degrees			6
	FVMQ	IP66/67 NEMA 6P	M20 gland			7
	FVMQ	IP66/67 NEMA 6P	NPT ½" thread			8

1) Product Configurator, order code for "Housing, cover seal, cable entry, degree of protection"

T17 housing (hygienic), optional display on the side

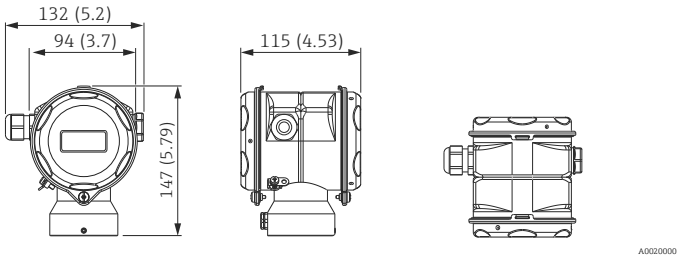

Engineering unit mm (in). Front view, left-hand side view, top view

Material		Degree of protection [1]	Cable entry	Weight in kg (lb)		Option [2]
Housing	Cover seal			with display	without display	
316L	EPDM	IP66/68 NEMA 6P	M20 gland	1.2 (2.65)	1.1 (2.43)	R
		IP66/68 NEMA 6P	G ½" thread			S
		IP66/68 NEMA 6P	NPT ½" thread			T
		IP66/68 NEMA 6P	M12 plug			U
		IP66/68 NEMA 6P	7/8" plug			V

1) Degree of protection IP 68: 1.83 mH_2O for 24 h
2) Product Configurator, order code for "Housing, cover seal, cable entry, degree of protection"

Process connections for PMC71 with internal process isolating diaphragm

Threaded connection ISO 228 G

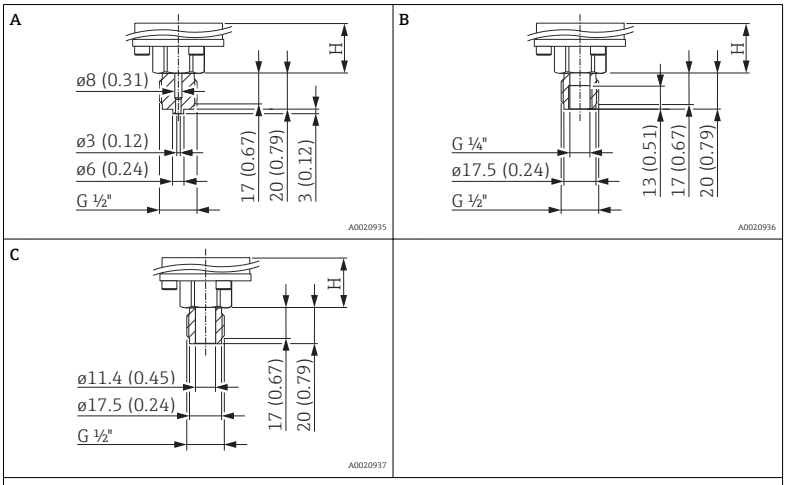

Engineering unit mm (in). Height H → 59

Item	Description	Material	Weight kg (lb)	Approval [1]	Option [2]
A	Thread ISO 228 G ½" A EN 837	AISI 316L	0.63 (1.39)	CRN	GA
		Alloy C276 (2.4819)		CRN	GB
		Monel (2.4360)		-	GC
		PVDF ▪ Only mount with a mounting bracket (included) ▪ MWP 10 bar (150 psi), OPL max. 15 bar (225 psi) ▪ Process temperature range: −10 to +60 °C (+14 to +140 °F)		-	GD
B	Thread ISO 228 G ½" A, G ¼" (internal)	AISI 316L		CRN	GE
		Alloy C276 (2.4819)		CRN	GF
		Monel (2.4360)		-	GG
C	Thread ISO 228 G ½" A, Hole11.4 mm (0.45 in)	AISI 316L		CRN	GH
		Alloy C276 (2.4819)		CRN	GJ
		Monel (2.4360)		-	GK

1) CSA approval: Product Configurator, order code for "Approval"
2) Product Configurator, order code for "Process connection"

Threaded connection ANSI

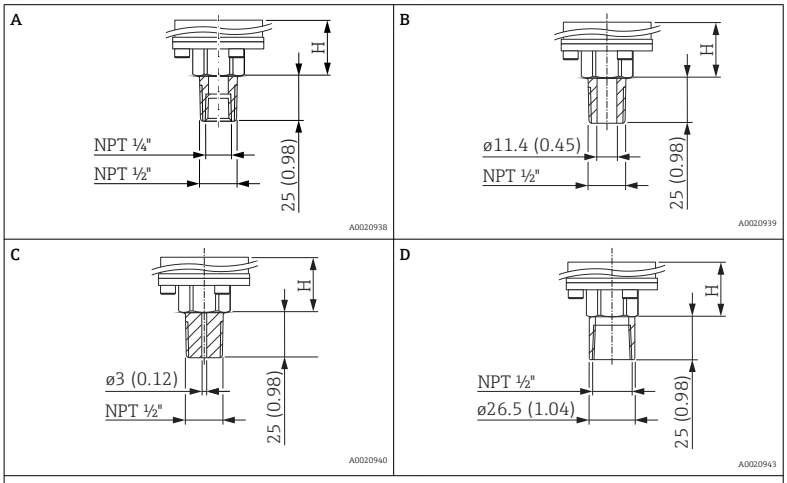

Engineering unit mm (in). Height H → 🗎 59

Item	Description	Material	Weight kg (lb)	Approval [1]	Option [2]
A	ANSI ½" MNPT, ¼" FNPT	AISI 316L	0.63 (1.39)	CRN	RA
		Alloy C276 (2.4819)		CRN	RB
		Monel (2.4360)		-	RC
B	ANSI ½" MNPT, Hole11.4 mm (0.45 in)	AISI 316L		CRN	RD
		Alloy C276 (2.4819)		CRN	RE
		Monel (2.4360)		-	RF
C	ANSI ½" MNPT, Hole3 mm (0.12 in)	**PVDF** ▪ Only mount with a mounting bracket (included) ▪ MWP 10 bar (150 psi), OPL max. 15 bar (225 psi) ▪ Process temperature range: +10 to +60 °C (+14 to +140 °F)		-	RG
D	ANSI ½" FNPT Hole11.4 mm (0.45 in)	AISI 316L		CRN	RH
		Alloy C276 (2.4819)		CRN	RJ
		Monel (2.4360)		-	RK

1) CSA approval: Product Configurator, order code for "Approval"
2) Product Configurator, order code for "Process connection"

Process connections for PMC71 with internal process isolating diaphragm

Threaded connection JIS

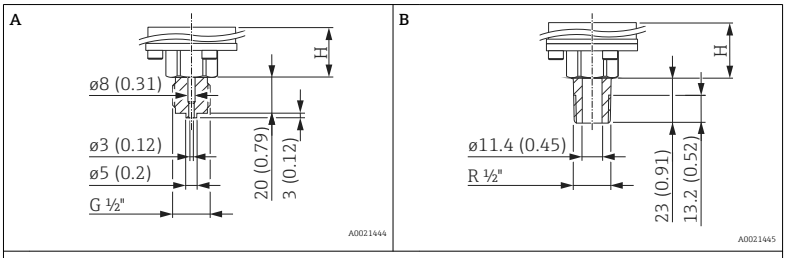

Engineering unit mm (in). Height H → 59

Item	Description	Material	Weight	Option [1]
			kg (lb)	
A	JIS B0202 G ½" (male)	AISI 316L	0.63 (1.39)	GL
B	JIS B0203 R ½" (male)			RL

1) Product Configurator, order code for "Process connection"

Threaded connection DIN 13

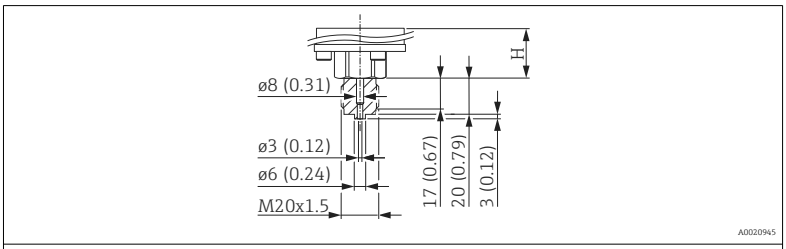

Engineering unit mm (in). Height H → 59

Description	Material	Weight	Option [1]
		kg (lb)	
DIN 13 M20 x 1.5, EN 837 3 mm (0.12 in)	AISI 316L	0.63 (1.39)	GP
	Alloy C276 (2.4819)		GQ

1) Product Configurator, order code for "Process connection"

Process connections for PMC71 with internal process isolating diaphragm - height H

Description	Height H
Standard height	26 mm (1.02 in)
Device with Ex d[ia], CSA XP or FM XP	96 mm (3.78 in)
High-temperature version	106 mm (4.17 in)
High-temperature version with Ex d[ia], CSA XP or FM XP	176 mm (6.93 in)

Process connections for PMC71 with flush-mounted process isolating diaphragm

Threaded connection DIN 13

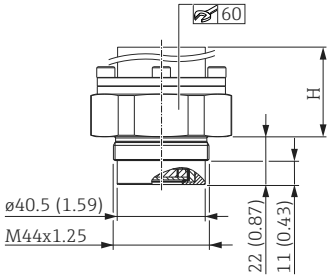

Measurements in mm (in). Height H → 🗎 61

Description	Material	Weight	Option [1]
		kg (lb)	
DIN 13 M44 x 1.25	AISI 316L	0.63 (1.39)	1R
	Alloy C276 (2.4819)		1S

1) Product Configurator, order code for "Process connection"

Threaded connection ISO 228 G

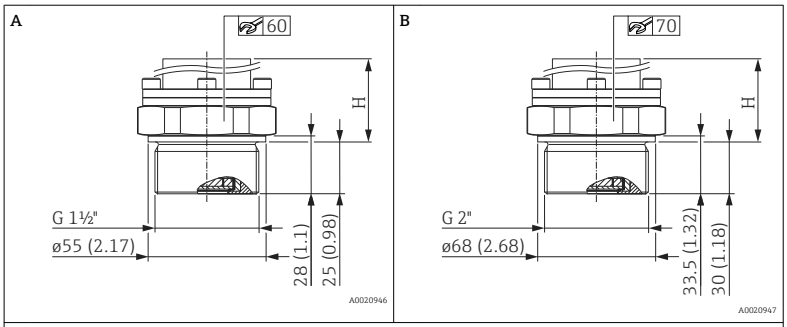

Measurements in mm (in). Height H → 🗎 61

Position	Description	Material	Weight	Option [1]
			kg (lb)	
A	Thread ISO 228 G 1 ½" A	AISI 316L	0.63 (1.39)	1G
		Alloy C276 (2.4819)		1H
		Monel (2.4360)		1J
B	Thread ISO 228 G 2" A	AISI 316L		1K
		Alloy C276 (2.4819)		1L
		Monel (2.4360)		1M

1) Product Configurator, order code for "Process connection"

Process connections for PMC71 with flush-mounted process isolating diaphragm

Threaded connection ANSI

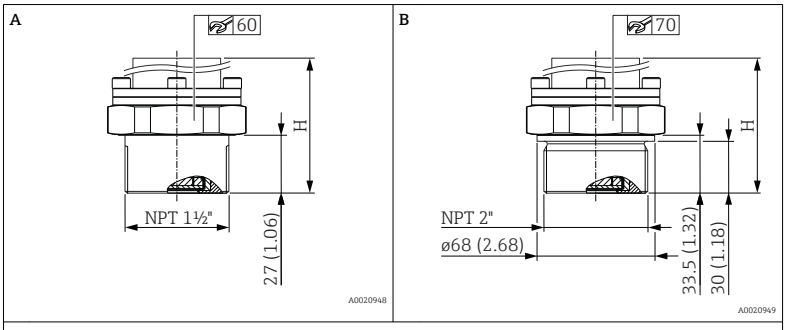

Engineering unit mm (in). Height H → 🗎 61

Position	Designation	Material	Weight kg (lb)	Approval [1]	Option [2]
A	ANSI 1 ½" MNPT	AISI 316L (CRN)	0.63 (1.39)	CRN	2D
		Alloy C276 (2.4819) (CRN)		CRN	2E
		Monel (2.4360)		CRN	2F
B	ANSI 2" MNPT	AISI 316L (CRN)		CRN	2G
		Alloy C276 (2.4819) (CRN)		CRN	2H
		Monel (2.4360)		-	2J

1) CSA approval: Product Configurator, order code for "Approval"
2) Product Configurator, order code for "Process connection"

Process connections for PMC71 with flush-mounted process isolating diaphragm - height H

Description	Height H
High-temperature version and standard version	86 mm (3.39 in)
Version with Ex d|ia|, CSA XP or FM XP	151 mm (5.94 in)

Process connections for PMC71 with flush-mounted process isolating diaphragm

EN/DIN flanges, connection dimensions in accordance with EN 1092-1/DIN 2527

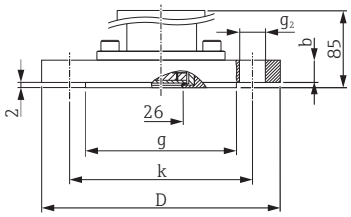

D *Diameter of flange*
b *Thickness*
g *Raised face*
k *Hole circle*
g_2 *Diameter of hole*

Engineering unit mm

Flange							Boltholes			Weight	Option [1]
Material	Nominal diameter	Nominal pressure	Shape [2]	D	b	g	Number	g_2	k		
				mm	mm	mm		mm	mm	kg (lb)	
AISI 316L	DN 25	PN 10-40	B1 (D)	115	18	68	4	14	85	1.4 (3.09)	BA
AISI 316L	DN 32	PN 10-40	B1 (D)	140	18	78	4	18	100	2.0 (4.41)	CP
AISI 316L	DN 40	PN 10-40	B1 (D)	150	18	88	4	18	110	2.4 (5.29)	CQ
AISI 316L	DN 50	PN 10-40	B1 (D)	165	20	102	4	18	125	3.2 (7.06)	B3
PVDF	DN 50	PN 10-16	B1 (D)	165	21.4	102	4	18	125	0.6 (1.32)	BR
AISI 316L	DN 50	PN 63	B2 (E)	180	26	102	4	22	135	4.6 (10.14)	C3
PVDF	DN 80	PN 10-16	B1 (D)	200	21.4	138	8	18	160	1.0 (2.21)	BS
AISI 316L	DN 80	PN 10-40	B1 (D)	200	24	138	8	18	160	5.4 (11.91)	B4

1) Product Configurator, order code for "Process connection"
2) Description as per DIN 2527 provided in brackets

ASME flanges, connection dimensions in accordance with ASME B 16.5, raised face RF

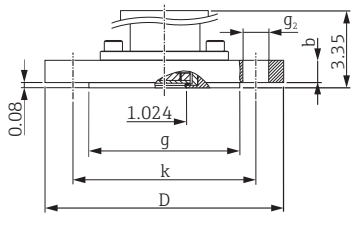

D *Diameter of flange*
b *Thickness*
g *Raised face*
k *Hole circle*
g_2 *Diameter of hole*

Engineering unit in.

Flange						Boltholes			Weight	Approval [1]	Option [2]
Material	Nominal diameter	Class	D	b	g	Number	g_2	k			
	[in]	[lb./sq.in]	[in]	[in]	[in]		[in]	[in]	[kg (lb)]		
AISI 316/316L [3]	1	150	4.25	1.18	2	4	0.62	3.12	0.9 (1.98)	-	AA [4]
AISI 316/316L [3]	1	300	4.88	1.18	2	4	0.75	3.5	1.4 (3.09)	-	AB [4]
AISI 316/316L [3]	1 ½	150	5	0.69	2.88	4	0.62	3.88	1.0 (2.21)	CRN	AE
AISI 316/316L [3]	1 ½	300	6.12	0.81	2.88	4	0.88	4.5	2.6 (5.73)	CRN	AQ
AISI 316/316L [3]	2	150	6	0.75	3.62	4	0.75	4.75	2.4 (5.29)	CRN	AF
ECTFE [5]	2	150	6	0.75	3.62	4	0.75	4.75	2.4 (5.29)	-	JR
PVDF	2	150	6	0.75	3.62	4	0.75	4.75	0.5 (1.1)	-	A3
AISI 316/316L [3]	2	300	6.5	0.88	3.62	8	0.75	5	3.2 (7.06)	CRN	AR
AISI 316/316L [3]	3	150	7.5	0.94	5	4	0.75	6	4.9 (10.8)	CRN	AG
ECTFE [5]	3	150	7.5	0.94	5	4	0.75	6	4.9 (10.8)	-	JS
PVDF	3	150	7.5	0.94	5	4	0.75	6	0.9 (1.98)	-	A4
AISI 316/316L [3]	3	300	8.25	1.12	5	8	0.88	6.62	6.8 (14.99)	CRN	AS
AISI 316/316L [3]	4	150	9	0.94	6.19	8	0.75	7.5	7.1 (15.66)	CRN	AH
ECTFE [5]	4	150	9	0.94	6.19	8	0.75	7.5	7.1 (15.66)	-	JT
AISI 316/316L [3]	4	300	10	1.25	6.19	8	0.88	7.88	11.6 (25.58)	CRN	AT

1) CSA approval: Product Configurator, order code for "Approval"
2) Product Configurator, order code for "Process connection"
3) Combination of AISI 316 for required pressure resistance and AISI 316L for required chemical resistance (dual rated)
4) Screws must be 15 mm (0.59 in) longer than the standard flange screws
5) ECTFE coating on AISI 316/316L. When operating in hazardous areas, avoid electrostatic charge on the plastic surfaces.

JIS flanges, connection dimensions in accordance with JIS B 2220 BL, raised face RF

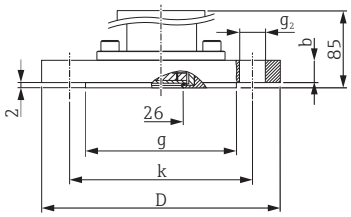

D *Diameter of flange*
b *Thickness*
g *Raised face*
k *Hole circle*
g_2 *Diameter of hole*

Engineering unit mm

Flange						Boltholes			Weight	Option [1]
Material	Nominal diameter	Nominal pressure	D	b	g	Number	g_2	k		
			mm	mm	mm		mm	mm	kg (lb)	
AISI 316L (1.4435)	50 A	10 K	155	16	96	4	19	120	2.0 (4.41)	CF
	80 A	10 K	185	18	127	8	19	150	3.3 (7.28)	KL
	100 A	10 K	210	18	151	8	19	175	4.4 (9.7)	KH

1) Product Configurator, order code for "Process connection"

Hygienic process connections for PMC71 with flush-mounted process isolating diaphragm

Many process connections with an EPDM or HNBR seal are approved for the PMC71 in accordance with the guidelines of the 3A Sanitary Standard. To ensure that the 3A approval is valid for the PMC71 version, a 3A-approved process connection together with an EPDM or HNBR seal must be selected when ordering (Product Configurator, order code for "Seal").

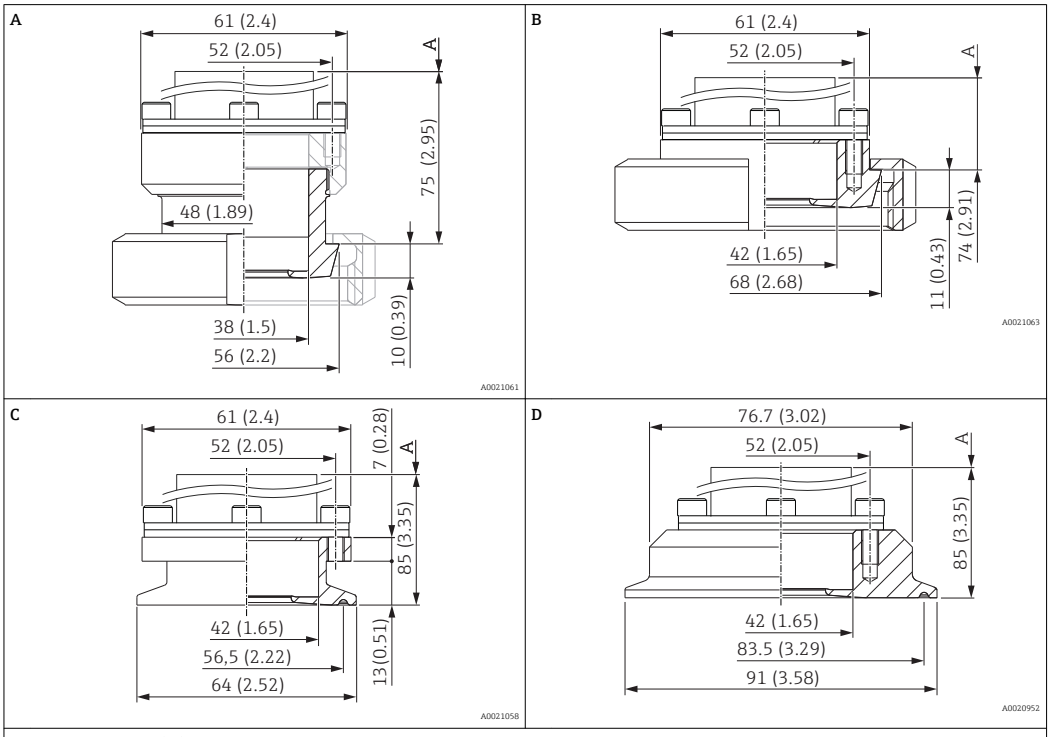

Engineering unit mm (in)

Position	Designation	Nominal pressure	Material [1]	Weight kg (lb)	Approval [2]	Option [3]
A	DIN 11851 DN 40 PN 25, with HNBR or EPDM seal	PN 25	AISI 316L (1.4435)	0.7 (1.54)	EHEDG, 3A, CRN	MP [4]
B	DIN 11851 DN 50 PN 25, with HNBR or EPDM seal	PN 25		0.9 (1.98)	EHEDG, 3A, CRN	MR [4]
C	Tri-Clamp ISO 2852 DN 51 (2"), with HNBR or EPDM seal	PN 40 [5]		0.7 (1.54)	EHEDG, 3A, CRN	TD [4]
D	Tri-Clamp ISO 2852 DN 76.1 (3"), with NBR or EPDM seal	PN 40 [5]		0.9 (1.98)	EHEDG, 3A, CRN	TF [4]

1) Delta-ferrite content < 1 %. Roughness of wetted surfaces R_a < 0.80 µm (31.5 µin) as standard. Lower surface roughness available on request.
2) CSA approval: Product Configurator, order code for "Approval"
3) Product Configurator, order code for "Process connection"
4) Endress+Hauser supplies these slotted nuts in stainless steel AISI 304 (DIN/EN material number 1.4301) or in AISI 304L (DIN/EN material number 1.4307).
5) Restricted nominal pressure (13.8 bar (200 psi)) for the following approvals: Product Configurator, order code for "Approval", option "E", "U" and "V".

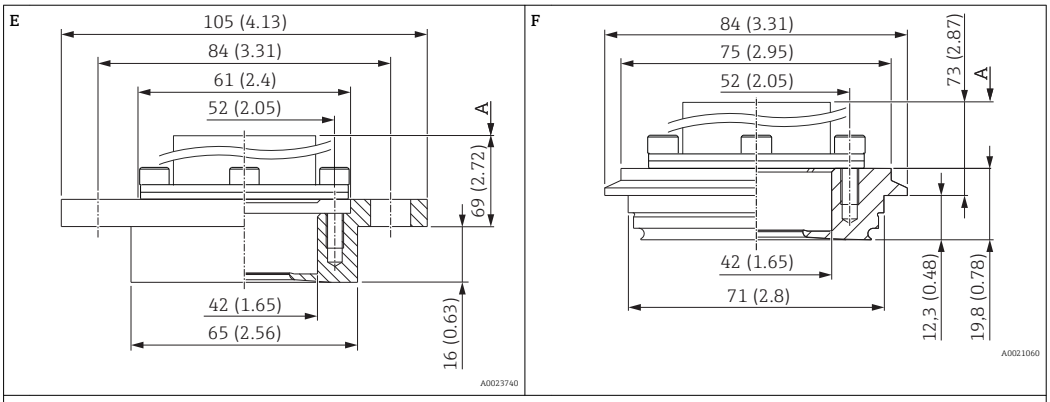

Engineering unit mm (in)

Position	Designation	Nominal pressure	Material [1]	Weight kg (lb)	Approval [2]	Option [3]
E	DRD DN50 (65 mm) with HNBR or EPDM seal	PN 25	AISI 316L (1.4435)	0.9 (1.98)	EHEDG	TK [4]
F	Varivent type N for pipes 40 – 162, with HNBR or EPDM seal	PN 40		1 (2.21)	EHEDG, 3A, CRN	TR

1) Delta-ferrite content < 1 %. Roughness of wetted surfaces R_a < 0.80 µm (31.5 µin) as standard. Lower surface roughness available on request.
2) CSA approval: Product Configurator, order code for "Approval"
3) Product Configurator, order code for "Process connection"
4) Endress+Hauser supplies these slotted nuts in stainless steel AISI 304 (DIN/EN material number 1.4301) or in AISI 304L (DIN/EN material number 1.4307).

Process connections for PMP71 with internal process isolating diaphragm

Threaded connection ISO 228 G

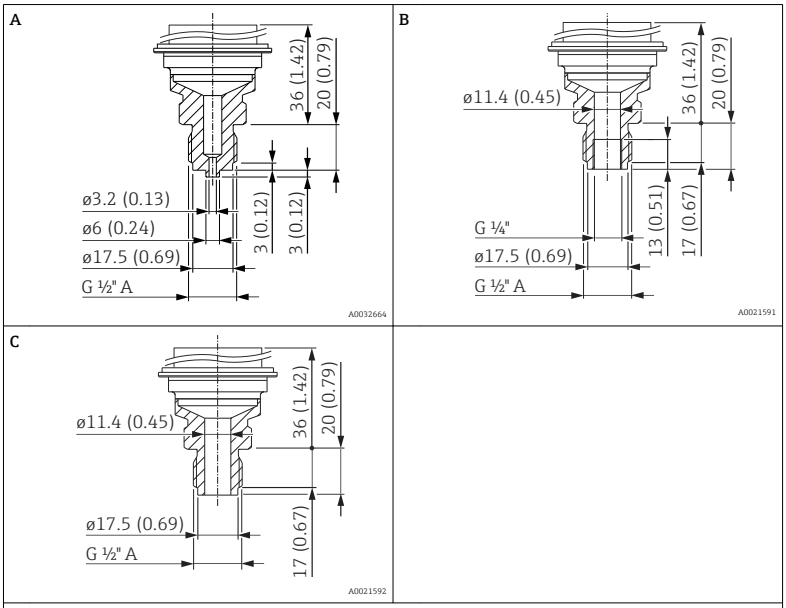

Engineering unit mm (in)

Item	Description	Material	Weight kg (lb)	Option [1]
A	Thread ISO 228 G ½" A EN 837	AISI 316L	0.63 (1.39)	GA
		Alloy C276 (2.4819)		GB
B	Thread ISO 228 G ½" A, G ¼" (internal)	AISI 316L		GE
		Alloy C276 (2.4819)		GF
C	Thread ISO 228 G ½" A, Hole11.4 mm (0.45 in)	AISI 316L		GH
		Alloy C276 (2.4819)		GJ

1) Product Configurator, order code for "Process connection"

Process connections for PMP71 with internal process isolating diaphragm

Threaded connection ANSI

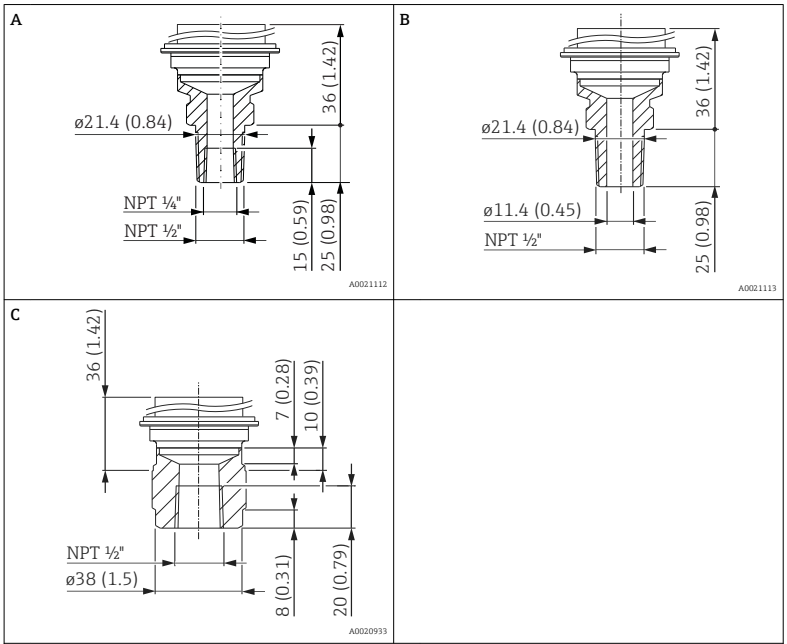

Engineering unit mm (in)

Item	Description	Material	Weight kg (lb)	Approval [1]	Option [2]
A	ANSI ½" MNPT, ¼" FNPT	AISI 316L	0.63 (1.39)	CRN	RA
		Alloy C276 (2.4819)		CRN	RB
B	ANSI ½" MNPT, Hole 11.4 mm (0.45 in) = 400 bar (6 000 psi) Hole 3.2 mm (0.13 in) = 700 bar (10 500 psi)	AISI 316L		CRN	RD
		Alloy C276 (2.4819)		CRN	RE
C	ANSI ½" FNPT	AISI 316L	0.7 (1.54)	CRN	RH
		Alloy C276 (2.4819)		CRN	RJ

1) CSA approval: Product Configurator, order code for "Approval"
2) Product Configurator, order code for "Process connection"

Process connections for PMP71 with internal process isolating diaphragm

Threaded connection JIS

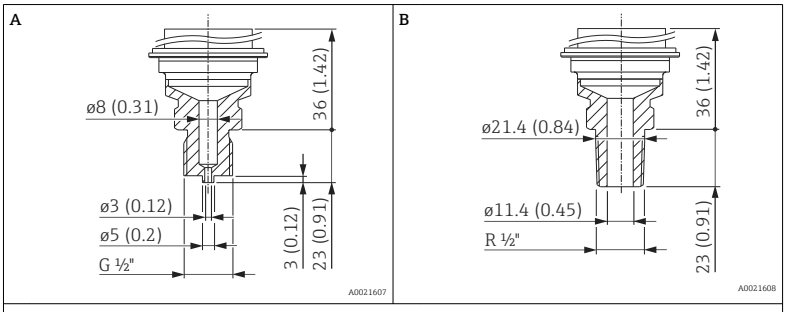

Engineering unit mm (in)

Position	Description	Material	Weight kg (lb)	Option [1]
A	JIS B0202 G ½" (male)	AISI 316L	0.6 (1.32)	GL
B	JIS B0203 R ½" (male)			RL

1) Product Configurator, order code for "Process connection"

Threaded connection DIN 13

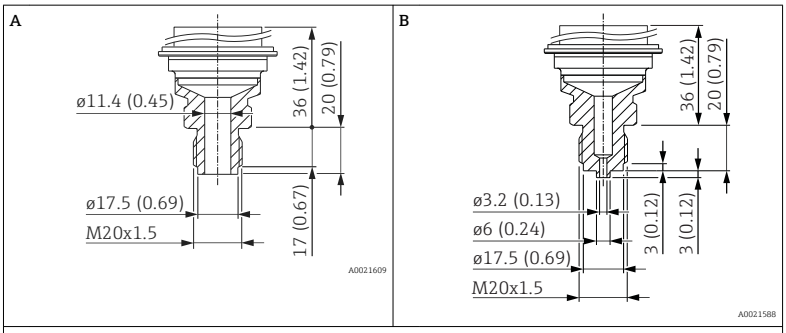

Engineering unit mm (in)

Position	Description	Material	Weight kg (lb)	Option [1]
A	DIN 13 M20 x 1.5 11.4 mm (0.45 in)	AISI 316L	0.6 (1.32)	GP
		Alloy C276 (2.4819)		GQ
B	DIN 13 M20 x 1.5, EN 837 3 mm (0.12 in)	AISI 316L		GR
		Alloy C276 (2.4819)		GS

1) Product Configurator, order code for "Process connection"

Process connections for PMP71 with flush-mounted process isolating diaphragm

Threaded connection ISO 228 G

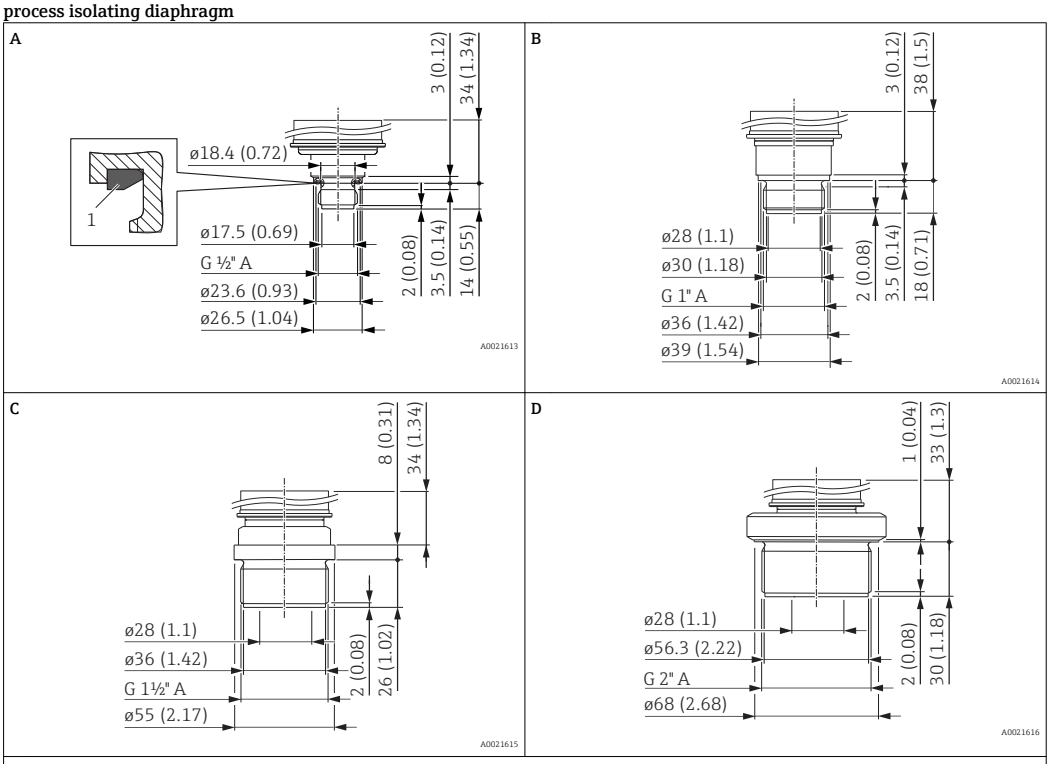

Engineering unit mm (in)

Item	Description	Material	Weight kg (lb)	Option [1]
A	Thread ISO 228 G ½" A, DIN 3852 FKM seal (item 1) pre-installed	AISI 316L	0.4 (0.88)	1A
		Alloy C276 (2.4819)		1B
B	Thread ISO 228 G 1" A	AISI 316L	0.7 (1.54)	1D
		Alloy C276 (2.4819)		1E
C	Thread ISO 228 G 1 ½" A	AISI 316L	1.1 (2.43)	1G
		Alloy C276 (2.4819)		1H
D	Thread ISO 228 G 2" A	AISI 316L	1.5 (3.31)	1K
		Alloy C276 (2.4819)		1L

1) Product Configurator, order code for "Process connection"

Threaded connection DIN

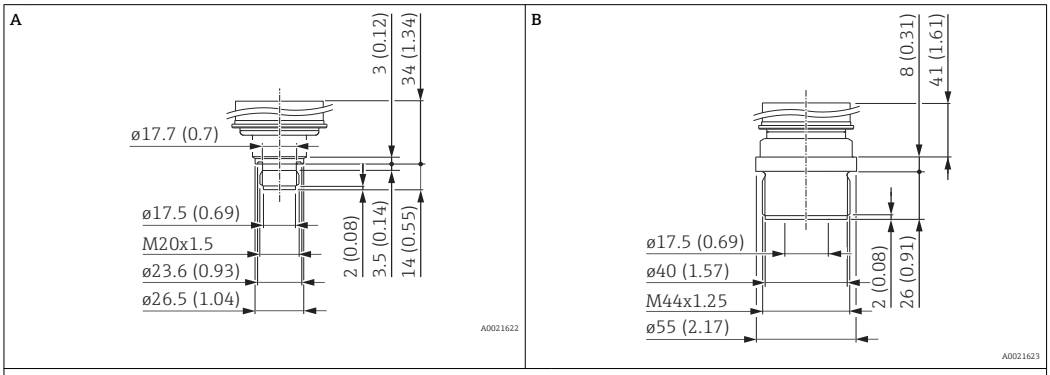

Engineering unit mm (in)

Item	Description	Material	Weight kg (lb)	Option [1]
A	Thread DIN 16288 M20	AISI 316L	0.4 (0.88)	1N
		Alloy C276 (2.4819)		1P
B	Thread DIN 13 M44 x 1.25	AISI 316L	1.1 (2.43)	1R
		Alloy C276 (2.4819)		1S

1) Product Configurator, order code for "Process connection"

Process connections for PMP71 with flush-mounted process isolating diaphragm

Threaded connection ANSI

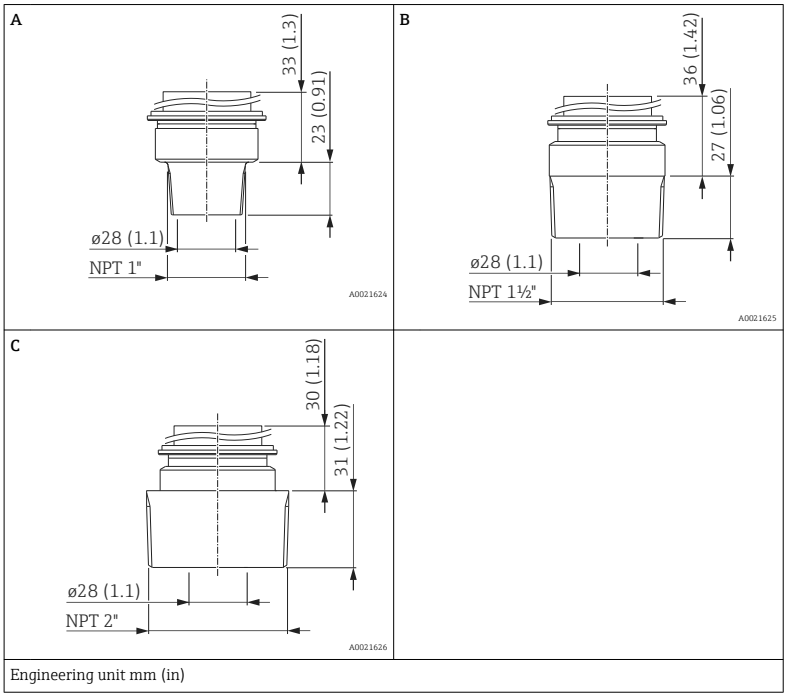

Engineering unit mm (in)

Item	Description	Material	Weight kg (lb)	Approval [1]	Option [2]
A	ANSI 1" MNPT	AISI 316L	0.7 (1.54)	CRN	2A
		Alloy C276 (2.4819)		CRN	2B
B	ANSI 1 ½" MNPT	AISI 316L	1 (2.21)	CRN	2D
		Alloy C276 (2.4819)		CRN	2E
C	ANSI 2" MNPT	AISI 316L	1.3 (2.87)	CRN	2G
		Alloy C276 (2.4819)		CRN	2H

1) CSA approval: Product Configurator, order code for "Approval"
2) Product Configurator, order code for "Process connection"

Process connections for PMP71 with flush-mounted process isolating diaphragm

EN/DIN flanges, connection dimensions in accordance with EN 1092-1/DIN 2527

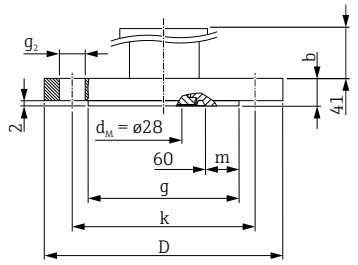

D *Diameter of flange*
b *Thickness*
g *Raised face*
m *Width of raised face*
k *Hole circle*
g_2 *Diameter of hole*
d_M *Max. diameter of the process isolating diaphragm*

Engineering unit mm

Flange [1]							Boltholes			Weight Flange	Option [2]
Nominal diameter	Nominal pressure	Shape [3]	D	b	g	m	Number	g_2	k		
			[mm]	[mm]	[mm]	[mm]		[mm]	[mm]	[kg]	
DN 25	PN 10-40	B1 (D)	115	18	68 [4]	4	4	14	85	1.2 (2.65)	CN
DN 32	PN 10-40	B1 (D)	140	18	78 [4]	9	4	18	100	1.9 (4.19)	CP
DN 40	PN 10-40	B1 (D)	150	18	88 [4]	14	4	18	110	2.2 (4.85)	CQ
DN 50	PN 10-40	B1 (D)	165	20	102	-	4	18	125	3.0 (6.62)	B3
DN 80	PN 10-40	B1 (D)	200	24	138	-	8	18	160	5.3 (11.69)	B4

1) Material: AISI 316L
2) Product Configurator, order code for "Process connection"
3) Description as per DIN 2527 provided in brackets
4) With these process connections the raised face is smaller than described in the standard. Due to the smaller raised face, a special seal must be used.

Process connections for PMP71 with flush-mounted process isolating diaphragm

ASME flanges, connection dimensions in accordance with ASME B 16.5, raised face RF*

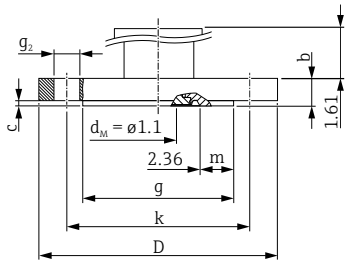

D *Diameter of flange*
b *Thickness*
g *Raised face*
c *Thickness of raised face*
m *Width of raised face*
k *Hole circle*
g_2 *Diameter of hole*
d_M *Max. diameter of the process isolating diaphragm*

Engineering unit in.
(*all apart from AN, see table below)

Flange [1]							Boltholes			Weight	Approval [2]	Option [3]
Nominal diameter	Class/nominal pressure	D	b	g	c	m	Number	g_2	k			
[in]	lb./sq.in	[in]	[in]	[in]	[in]	[in]		[in]	[in]	[kg]		
1	300	4.88	0.69	2 [4]	0.06	0.2	4	0.75	3.5	1.3 (2.87)	CRN	AN
1 ½	150	5	0.69	2.88 [4]	0.08	0.52	4	0.62	3.88	1.5 (3.31)	CRN	AE
1 ½	300	6.12	0.81	2.88 [4]	0.08	0.52	4	0.88	4.5	2.6 (5.73)	CRN	AQ
2	150	6	0.75	3.62	0.08	-	4	0.75	4.75	2.4 (5.29)	CRN	AF
2	300	6.5	0.88	3.62	0.08	-	8	0.75	5	3.2 (7.06)	CRN	AR
3	150	7.5	0.94	5	0.08	-	4	0.75	6	4.9 (10.8)	CRN	AG
3	300	8.25	1.12	5	0.08	-	8	0.88	6.62	6.7 (14.77)	CRN	AS
4	150	9	0.94	6.19	0.08	-	8	0.75	7.5	7.1 (15.66)	CRN	AH
4	300	10	1.25	6.19	0.08	-	8	0.88	7.88	11.6 (25.88)	CRN	AT

1) Material: AISI 316/316L; Combination of AISI 316 for required pressure resistance and AISI 316L for required chemical resistance (dual rated)
2) CSA approval: Product Configurator, order code for "Approval"
3) Product Configurator, order code for "Process connection"
4) With these process connections the raised face is smaller than described in the standard. Due to the smaller raised face, a special seal must be used.

Process connections for PMP71 with flush-mounted process isolating diaphragm

JIS flanges, connection dimensions in accordance with JIS B 2220 BL, raised face RF

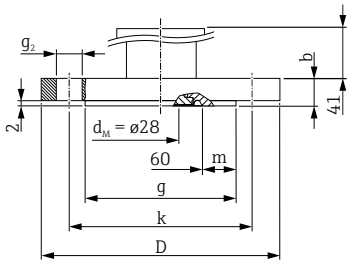

D *Diameter of flange*
b *Thickness*
g *Raised face*
m *Width of raised face*
k *Hole circle*
g_2 *Diameter of hole*

Engineering unit mm

Flange							Boltholes			Weight Flange	Option [1]
Material	Nominal diameter	Class/ Nominal pressure	D	b	g	m	Number	g_2	k		
			[mm]	[mm]	[mm]	[mm]		[mm]	[mm]	[kg]	
AISI 316L	25 A	20 K	125	16	67 [2]	3.5	4	19	90	1.5 (3.31)	KA
AISI 316L	50 A	10 K	155	16	96	-	4	19	120	2.0 (4.41)	CF
AISI 316L	80 A	10 K	185	18	127	-	8	19	150	3.3 (7.28)	KL
AISI 316L	100 A	10 K	210	18	151	-	8	19	175	4.4 (9.7)	KH

1) Product Configurator, order code for "Process connection"
2) With these process connections the raised face is smaller than described in the standard. Due to the smaller raised face, a special seal must be used.

Process connections for PMP71

Oval flange

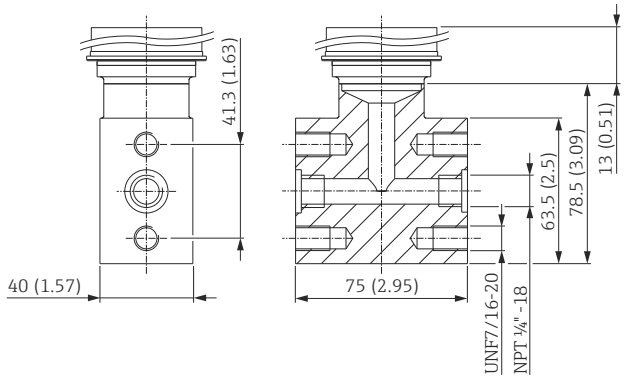

Engineering unit mm (in)

Material	Description	Weight kg (lb)	Approval [1]	Option [2]
AISI 316L (1.4404)	Oval flange adapter 1/4-18 NPT as per IEC 61518 Mounting: 7/16-20 UNF	1.9 (4.19)	CRN	UR

1) CSA approval: Product Configurator, order code for "Approval"
2) Product Configurator, order code for "Process connection"

Process connections for PMP71

Prepared for diaphragm seal mount

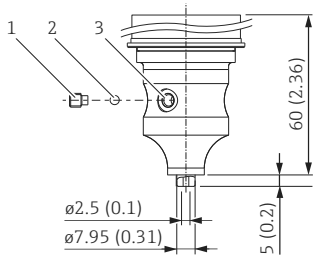

1 Setscrew with hexagonal recess4 mm (0.16 in), material A2-70
2 Bearing DIN 5401 (1.3505)
3 Hole for filling fluid

Engineering unit mm (in)

Material	Description	Weight in kg (lb)	Approval [1]	Option [2]
AISI 316L (1.4404)	Prepared for diaphragm seal mount	1.9 (4.19)	CRN	U1

1) CSA approval: Product Configurator, order code for "Approval"
2) Product Configurator, order code for "Process connection"

Valve manifold DA63M- (optional)

Endress+Hauser supplies milled valve manifolds via the transmitter's product structure in the following versions:

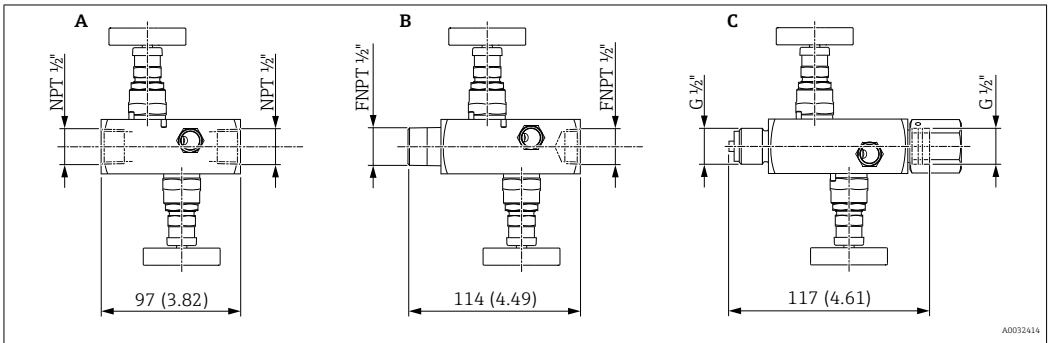

A 2-way valve manifold FNPT x FNPT
B 2-way valve manifold MNPT x FNPT
C 2-way valve manifold G ½" + adjusting nut

Engineering unit mm (in)

2-way valve manifolds in 316L or AlloyC can be
- as an **enclosed** accessory (seal for mounting enclosed)
- ordered as a **mounted** accessory (mounted valve manifolds are supplied with a documented leakage test).

Certificates ordered with the equipment (e.g. 3.1 material certificate and NACE) and tests (e.g. PMI and pressure test) apply to the transmitter and the valve manifold.

For other details (order option, dimension, weight, materials), see SD01553P/00/EN "Mechanical accessories for pressure measuring devices".

During the operating life of the valves, it may be necessary to re-tighten the packing.

Mounting on valve manifold

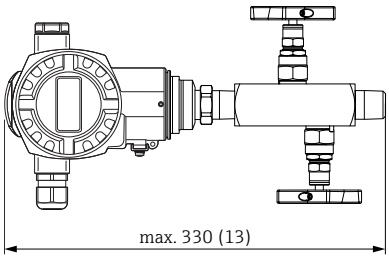

Engineering unit mm (in)

Ordering information:

Product Configurator, order code for "Accessories mounted"

PMP75 basic device

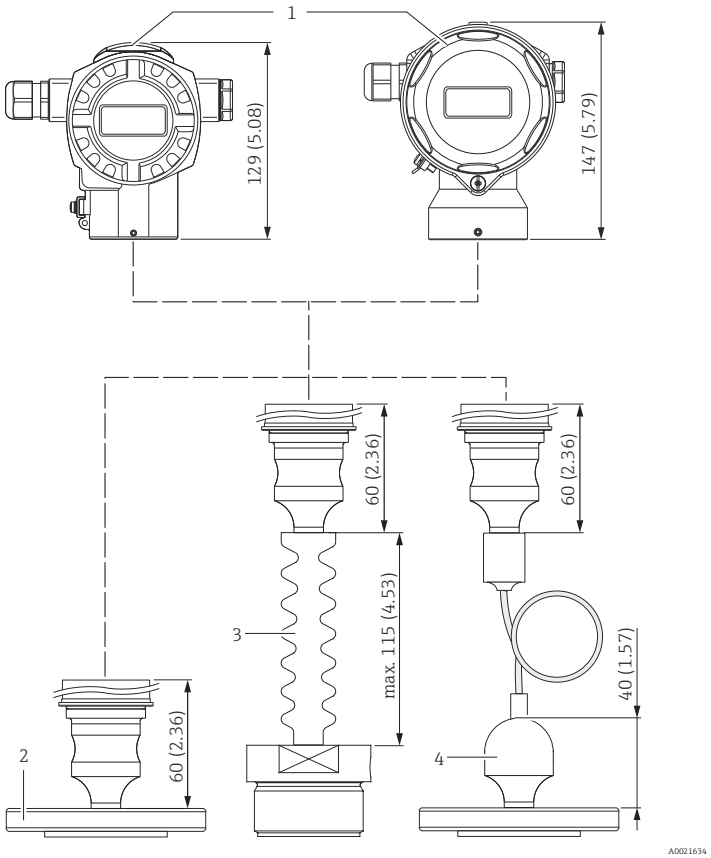

1 *PMP75 basic device*
2 *Diaphragm seal, here, e.g. flange diaphragm seal*
3 *Diaphragm seal with temperature isolator*
4 *Process connections with capillary lines are 40 mm (1.57 in) higher than process connections without capillary lines*

Engineering unit mm (in). PMP75 basic device with diaphragm seal.

Process connections for PMP75 with flush-mounted process isolating diaphragm

- The weights of the diaphragm seals are given in the tables. For weight of housing, see → 🗎 55
- The following drawings are drawings that illustrate how the system works in principle. In other words, the dimensions of a diaphragm seal supplied can deviate from the dimensions given in this document.
- Note "Planning instructions, diaphragm seal systems" section→ 🗎 110
- For further information please contact your local Endress+Hauser Sales Center.

Diaphragm seal cell structure

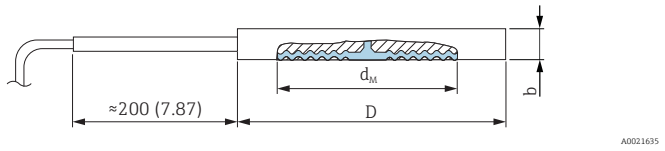

D *Diameter*
d_M *Max. diameter of the process isolating diaphragm*
b *Thickness*

Engineering unit mm (in)

Flange					Diaphragm seal		Approval [1]	Option [2]
Material	Nominal diameter	Nominal pressure [3]	D	b	d_M	Weight		
			[mm]	[mm]	[mm]	[kg (lb)]		
AISI 316L	DN 50	PN 16-400	102	20	59	1.3 (2.87)	-	UI
	DN 80	PN 16-400	138	20	89	2.3 (5.07)	-	UJ
	DN 100	PN 16-400	162	20	89	3.1 (6.84)	-	UK
	[in]	[lb/sq.in]	[in (mm)]	[in (mm)]	[in (mm)]			
	2	150-2500	3.89 (99)	0.79 (20)	2.32 (59)	1.3 (2.87)	CRN	UL
	3	150-2500	5.00 (127)	0.79 (20)	3.50 (89)	2.3 (5.07)	CRN	UM
	4	150-2500	6.22 (158)	0.79 (20)	3.50 (89)	3.1 (6.84)	CRN	UR

1) CSA approval: Product Configurator, order code for "Approval"
2) Product Configurator, order code for "Process connection"
3) The specified nominal pressure applies to the diaphragm seal. The maximum pressure for the measuring device is dependent on the lowest-rated element, with regard to pressure, of the selected components → 🗎 53.

Process connections for PMP75 with flush-mounted process isolating diaphragm

Thread ISO 228 and ANSI

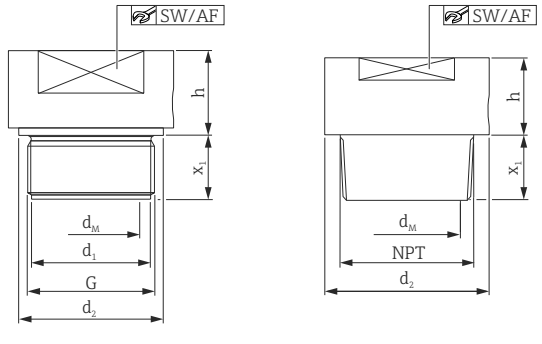

d_1 Diameter
d_2 Diameter
G Thread
x_1 Screw-in length
AF across flats
d_M Max. diameter of the process isolating diaphragm
h Height

Engineering unit mm (in). Left: thread ISO 228, right: thread ANSI

Threaded connection							Diaphragm seal			Approval [1]	Option [2]
Material	G	Nominal pressure	d_1	d_2	x_1	SW/AF	d_M	h	Weight		
		PN	[mm]	[mm]	[mm]		[mm]	[mm]	[kg (lb)]		
AISI 316L	G 1" A	400	30	39	21 [3]	32	30	19	0.4 (0.88)	-	1D
Alloy C276									0.5 (1.1)	-	1E
AISI 316L	G 1 ½" A	400	44	55	30	50	42	20	0.9 (1.98)	-	1G
Alloy C276									1.0 (2.21)	-	1H
AISI 316L	G 2"	400	56	68	30	65	50	20	1.9 (4.19)	-	1K
Alloy C276									2.1 (4.63)	-	1L
AISI 316L	1" MNPT	400	–	45	28	41	24	17	0.6 (1.32)	CRN	2A
Alloy C276									0.7 (1.54)	CRN	2B
AISI 316L	1 ½" MNPT	400	–	60	30	41	36	20	0.9 (1.98)	CRN	2D
Alloy C276				52	30	46	32	20	1.0 (2.21)	CRN	2E
AISI 316L	2" MNPT	400	–	78	30	65	38	25	1.8 (3.97)	CRN	2G
Alloy C276									2.0 (4.41)	CRN	2H

1) CSA approval: Product Configurator, order code for "Approval"
2) Product Configurator, order code for "Process connection"
3) 28 mm (1.1 in) in conjunction with high-temperature oil

Process connections for PMP75 with flush-mounted process isolating diaphragm

Tri-Clamp ISO 2852

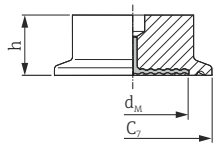

C7 Diameter of flange
h Height
d_M Max. diameter of the process isolating diaphragm

Engineering unit mm (in)

Material [1]	Nominal diameter ISO 2852	Nominal diameter DIN 32676	Nominal diameter	C_7	d_M		h	Weight	Approval [2]	Option [3]
					Standard	with TempC membrane				
			[in]	[mm]	[mm]	[mm]	[mm]	[kg (lb)]		
AISI 316L	ND 25 / 33.7	DN 25	1	50.5	24	-	37	0.32 (0.71)	EHEDG, 3A, CRN	TB
	ND 38	DN 40	1 ½	50.5	36	36	30	1 (2.21)	EHEDG, 3A, CRN	TC [4] [5]
	ND 51 / 40	DN 50	2	64	48	41	30	1.1 (2.43)	EHEDG, 3A, CRN	TD [4] [5]
	ND 63.5	DN 50	2 ½	77.5	61	61	30	0.7 (1.54)	EHEDG, 3A	TE [6]
	ND 76.1	–	3	91	73	61	30	1.2 (2.65)	EHEDG, 3A, CRN	TF [5]

1) Surface roughness of the wetted surfaces R_a < 0.76 µm (29.9 µin) as standard. Lower surface roughness available on request.
2) CSA approval: Product Configurator, order code for "Approval"
3) Product Configurator, order code for "Process connection"
4) Optionally available as an ASME-BPE-compliant diaphragm seal version for use in biochemical processes, surfaces in contact with medium R_a < 0.38 µm (15 µin)) , electropolished; order using order code for "Additional options", option "P".
5) Alternatively available with TempC membrane.
6) With TempC membrane

PN max. = 40 bar (580 psi). The maximum PN depends on the clamp used.

Process connections for PMP75 with flush-mounted process isolating diaphragm

Tri-Clamp pipe diaphragm seal ISO 2852

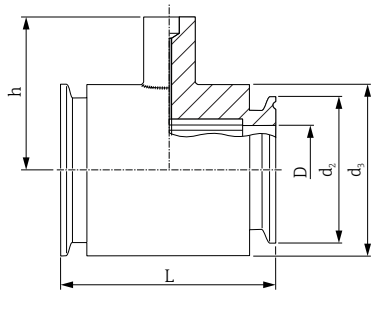

h *Height*
D *Diameter*
d_2 *Diameter*
d_3 *Diameter*
L *Installation length*

Engineering unit mm (in)

Material [1]	Nominal diameter ISO 2852	Nominal diameter	Nominal pressure	D	d_2	d_3	h	L	Weight	Approval [2]	Option [3]
		[in]		[mm]	[mm]	[mm]	[mm]	[mm]	[kg (lb)]		
AISI 316L	DN 25	1	PN 40	22.5	50.5	54	67	126	1.7 (3.75)	3A, CRN	SB
	DN 38	1 ½	PN 40	35.5	50.5	69	67	126	1.0 (2.21)	3A, CRN	SC [4]
	DN 51	2	PN 40	48.6	64	78	79	100	1.7 (3.75)	3A, CRN	SD [4]

1) Surface roughness of the wetted surfaces R_a < 0.8 µm (31.5 µin) as standard.
2) CSA approval: Product Configurator, order code for "Approval"
3) Product Configurator, order code for "Process connection"
4) incl. 3.1 and pressure test according to Pressure Equipment Directive, Category II

Hygienic process connections for PMP75 with flush-mounted process isolating diaphragm

Varivent for pipes

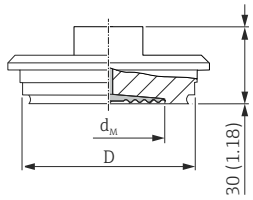

D Diameter
d_M Max. diameter of the process isolating diaphragm

Engineering unit mm (in)

Material [1]	Designation	Nominal pressure	D	d_M		Weight	Approval	Option [2]
				Standard	with TempC membrane			
			[mm]	[mm]	[mm]	[kg (lb)]		
AISI 316L	Type F for pipes DN 25 - DN 32	PN 40	50	34	36	0.4 (0.88)	EHEDG, 3A	TU [3]
AISI 316L	Type N for pipes DN 40 - DN 162	PN 40	68	58	61	0.8 (1.76)	EHEDG, 3A	TR [4] [5]

1) Surface roughness of the wetted surfaces R_a < 0.76 µm (29.9 µin) as standard.
2) Product Configurator, order code for "Process connection"
3) With TempC membrane
4) Optionally available as an ASME-BPE-compliant diaphragm seal version for use in biochemical processes, surfaces in contact with medium R_a < 0.38 µm (15 µin)) , electropolished; order using order code for "Additional options", option "P". Reduced surface roughness on request.
5) Alternatively available with TempC membrane.

DRD DN50 (65 mm)

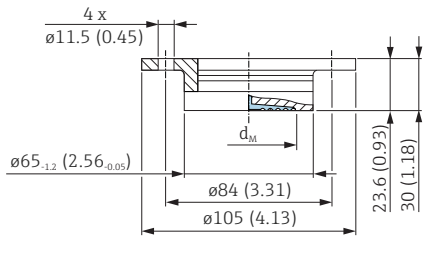

d_M Max. diameter of the process isolating diaphragm

Engineering unit mm (in)

Material [1]	Nominal pressure	d_M		Weight	Option [2]
		Standard	with TempC membrane		
		[mm]	[mm]	[kg (lb)]	
AISI 316L	PN 25	50	48	0.75 (1.65)	TK [3]

1) Surface roughness of the wetted surfaces R_a < 0.76 µm (29.9 µin) as standard.
2) Product Configurator, order code for "Process connection"
3) Alternatively available with TempC membrane.

Hygienic process connections for PMP75 with flush-mounted process isolating diaphragm

SMS nozzles with coupling nut

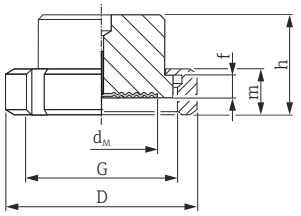

D *Diameter*
f *Nozzle height*
G *Thread*
h *Height*
m *Height*
d_M *Max. diameter of the process isolating diaphragm*

Engineering unit mm (in)

Material [1]	Nominal diameter	Nominal pressure	D	f	G	m	h	d_M	Weight	Approval	Option [2]
			[mm]	[mm]		[mm]	[mm]	[mm]	[kg (lb)]		
AISI 316L	1	PN 25	54	3.5	Rd 40 – 1/6	20	42.5	24	0.25 (0.55)	3A, EHEDG	TG
	1 ½	PN 25	74	4	Rd 60 – 1/6	25	57	36	0.65 (1.43)	3A, EHEDG	TH [3]
	2	PN 25	84	4	Rd 70 – 1/6	26	62	48	1.05 (2.32)	3A, EHEDG	TI [3]

1) Surface roughness of the wetted surfaces R_a < 0.76 µm (29.9 µin) as standard.
2) Product Configurator, order code for "Process connection"
3) Alternatively available with TempC diaphragm.

APV-RJT nozzles with coupling nut

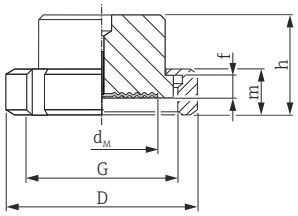

D Diameter
f Nozzle height
G Thread
h/m Height
d_M Max. diameter of the process isolating diaphragm

Engineering unit mm (in)

Material [1]	Nominal diameter	Nominal pressure	D	f	G	m	h	d_M	Weight	Option [2]
	[in]	[bar]	[mm]	[mm]		[mm]	[mm]	[mm]	[kg (lb)]	
AISI 316L	1	PN 40	77	6.5	1 13/16 – 1/8"	22	42.6	21	0.45 (0.99)	TL
	1 ½	PN 40	72	6.4	2 5/16 – 1/8"	22	42.6	28	0.75 (1.65)	TM
	2	PN 40	86	6.4	2 7/8 – 1/8"	22	42.6	38	1.2 (2.65)	TN

1) Surface roughness of the wetted surfaces R_a < 0.8 µm (31.5 µin) as standard.
2) Product Configurator, order code for "Process connection"

APV-ISS nozzles with coupling nut

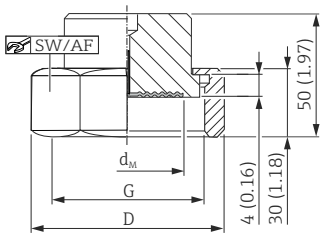

D Diameter
G Thread
AF across flats
d_M Max. diameter of the process isolating diaphragm

Engineering unit mm (in)

Material [1]	Nominal diameter	Nominal pressure	D	G	SW/AF	d_M	Weight	Option [2]
	[in]	[bar]	[mm]			[mm]	[kg (lb)]	
AISI 316L	1	PN 40	54.1	1 ½" – 1/8"	46.8	24	0.4 (0.88)	TP
	1 ½	PN 40	72	2" – 1/8"	62	34	0.6 (1.32)	TQ
	2	PN 40	89	2 ½" – 1/8"	77	45	1.1 (2.43)	TS

1) Surface roughness of the wetted surfaces R_a < 0.8 µm (31.5 µin) as standard.
2) Product Configurator, order code for "Process connection"

Hygienic process connections for PMP75 with flush-mounted process isolating diaphragm

Taper adapter with coupling nut, DIN 11851

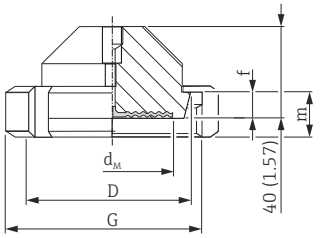

D *Diameter*
f *Nozzle height*
G *Thread*
m *Height*
d_M *Max. diameter of the process isolating diaphragm*

Engineering unit mm (in)

Material [1]	Taper adapter				Slotted nut		Diaphragm seal			Approval	Option [2]
							d_M		Weight		
	Designation	Nominal pressure	D	f	G	m	Standard	with TempC membrane			
		[bar]	[mm]	[mm]		[mm]	[mm]	[mm]	[kg (lb)]		
AISI 316L	DN 32	PN 40	50	10	Rd 58 x 1/6"	21	32	28	0.45 (0.99)	3A, EHEDG	MI [3]
	DN 40	PN 40	56	10	Rd 65 x 1/6"	21	38	36	0.45 (0.99)	3A, EHEDG	MZ [3]
	DN 50	PN 25	68.5	11	Rd 78 x 1/6"	19	52	48	1.1 (2.43)	3A, EHEDG	MR [4]
	DN 65	PN 25	86	12	Rd 95 x 1/6"	21	66	61	2.0 (4.41)	3A, EHEDG	MS [4]
	DN 80	PN 25	100	12	Rd 110 x 1/4"	26	81	61	2.55 (5.62)	3A, EHEDG	MT [4]

1) Surface roughness of the wetted surfaces R_a < 0.76 µm (29.9 µin) as standard.
2) Product Configurator, order code for "Process connection"
3) With TempC membrane
4) Alternatively available with TempC membrane.

NEUMO BioControl

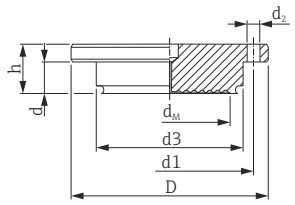

D Diameter
h/d Height
d1/ d3 diameter
d_2 Diameter of hole
d_M Max. diameter of the process isolating diaphragm

Engineering unit mm (in)

Material [1]	NEUMO BioControl (Process temperature range: −10 to +200 °C (+14 to +392 °F))								Diaphragm seal			Approval	Option [2]
									d_M		Weight		
	Nominal diameter	Nominal pressure	D	d	d_2	d_3	d_1	m	Standard	with TempC membrane			
		[bar]	[mm]	[mm]	[mm]	[mm]	[mm]	[mm]	[mm]	[mm]	[kg (lb)]		
AISI 316L	DN 50	PN 16	90	17	4 x Ø 9	50	70	27	40	36	1.1 (2.43)	3A	S4 [3]
	DN 80	PN 16	140	25	4 x Ø 11	87.4	115	37	61	61	2.6 (5.73)	3A	S6 [3]

1) Surface roughness of the wetted surfaces R_a < 0.76 µm (29.9 µin) as standard.
2) Product Configurator, order code for "Process connection"
3) With TempC membrane

Universal process adapter

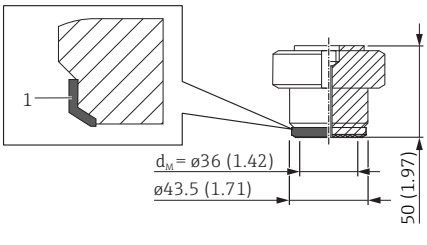

1 Silicone molded seal

Engineering unit mm (in)

Designation	Nominal pressure	Material [1]	Weight [kg (lb)]	Approval	Option [2]
Universal adapter with silicone molded seal (spare part no.: 52023572) FDA 21CFR177.2600/USP Class VI	PN 10	AISI 316L (1.4435)	0.8 (1.76)	3A, EHEDG	00 [3] [4]

1) Surface roughness of wetted surfaces R_a< 0.76 µm (29.9 µin).
2) Product Configurator, order code for "Process connection"
3) Endress+Hauser supplies these slotted nuts in stainless steel AISI 304 (DIN/EN material number 1.4301) or in AISI 304L (DIN/EN material number 1.4307).
4) Alternatively available with TempC membrane.

Process connections for PMP75 with flush-mounted process isolating diaphragm

EN/DIN flanges, connection dimensions in accordance with EN 1092-1/DIN 2527 and DIN 2501-1

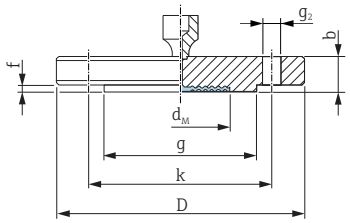

D *Diameter of flange*
b *Thickness*
g *Raised face*
f *Raised face*
k *Hole circle*
g_2 *Diameter of hole*
d_M *Max. diameter of the process isolating diaphragm*

Engineering unit mm

Flange [1) 2) 3)]							Boltholes			Diaphragm seal		Option [4)]
Nominal diameter	Nominal pressure	Shape [5)]	D	b	g	f	Number	g_2	k	d_M	Weight	
			[mm]	[mm]	[mm]	[mm]		[mm]	[mm]	[mm]	[kg (lb)]	
DN 25	PN 10-40	B1 (D)	115	18	68	3	4	14	85	32	2.1 (4.63)	CN [6)]
DN 25	PN 63-160	B2 (E)	140	24	68	2	4	18	100	28	2.5 (5.51)	DN
DN 25	PN 250	B2 (E)	150	28	68	2	4	22	105	28	3.7 (8.16)	EN
DN 25	PN 400	B2 (E)	180	38	68	2	4	26	130	28	7.0 (15.44)	E1
DN 32	PN 10-40	B1 (D)	140	18	77	2.6	4	18	100	34	1.9 (4.19)	CP
DN 40	PN 10-40	B1 (D)	150	18	87	2.6	4	18	110	48	2.2 (4.85)	CQ
DN 50	PN 10-40	B1 (D)	165	20	102	3	4	18	125	59	3.0 (6.62)	B3 [6)]
DN 50	PN 63	B2 (E)	180	26	102	3	4	22	135	59	4.6 (10.14)	C3
DN 50	PN 100-160	B2 (E)	195	30	102	3	4	26	145	59	6.2 (13.67)	EF
DN 50	PN 250	B2 (E)	200	38	102	3	8	26	150	59	7.7 (16.98)	ER
DN 50	PN 400	B2 (E)	235	52	102	3	8	30	180	59	14.7 (32.41)	E3
DN 80	PN 10-40	B1 (D)	200	24	138	3.5	8	18	160	89	5.3 (11.69)	B4 [6)]
DN 80	PN 100	B2 (E)	230	32	138	4	8	24	180	89	8.9 (19.62)	C4
DN 100	PN 100	B2 (E)	265	36	175	5	8	30	210	89	13.7 (30.21)	C5

1) material: AISI 316L
2) The roughness of the surface in contact with the medium, including raised faced of flanges (all standards) made of Alloy C276, Monel, tantalum, rhodium>gold, gold or PTFE is R_a< 0.8 µm (31.5 µin). Lower surface roughness on request.
3) The flange raised face is made of the same material as the process isolating diaphragm.
4) Product Configurator, order code for "Process connection"
5) Description as per DIN 2527 provided in brackets
6) Alternatively available with TempC membrane. Diameter of process isolating diagram modified in TempC version: DN25: 28 mm; DN50: 61 mm.

EN/DIN flanges with barrel (extended diaphragm seal), connection dimensions in accordance with EN 1092-1/DIN 2527 and DIN 2501-1

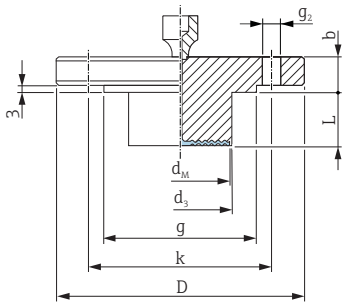

D *Diameter of flange*
b *Thickness*
g *Raised face*
k *Hole circle*
g_2 *Diameter of hole*
d_M *Max. diameter of the process isolating diaphragm*
d_3 *Barrel (extended diaphragm seal) diameter*
L *Barrel (extended diaphragm seal) length*

Engineering unit mm

Flange [1) 2)]						Boltholes			Diaphragm seal		Option [3)]
Nominal diameter	Nominal pressure	Shape [4)]	D	b	g	Number	g_2	k	d_M	Weight	
			[mm]	[mm]	[mm]		[mm]	[mm]	[mm]	[kg (lb)]	
DN 50	PN 10-40	B1 (D)	165	20	102	4	18	125	47	[5)]	D3 [5)]
DN 80	PN 10-40	B1 (D)	200	24	138	8	18	160	72	[5)]	D4 [5)]

1) Material: AISI 316L
2) In the case of process isolating diaphragms made of Alloy C276, Monel or tantalum, the raised face of the flange and the barrel pipe are made of 316L
3) Product Configurator, order code for "Process connection"
4) Description as per DIN 2527 provided in brackets
5) Available with 50 mm (1.97 in), 100 mm (3.94 in) and 200 mm (7.87 in)barrel, (extended diaphragm seal), for barrel (extended diaphragm seal) diameter and weight see the following table

Option [1)]	Nominal diameter	Nominal pressure	L	d_3	Weight
			[mm]	[mm]	[kg (lb)]
D3	DN 50	PN 10-40	50 / 100 / 200	48.3	3.2 (7.1)/ 3.8 (8.4)/ 4.4 (9.7)
D4	DN 80	PN 10-40	50 /100 / 200	76	6.2 (13.7)/ 6.7 (14.8)/ 7.8 (17.2)

1) Product Configurator, order code for "Process connection"

Process connections for PMP75 with flush-mounted process isolating diaphragm

ASME flanges, in accordance with connection dimensions ASME B 16.5, raised face RF

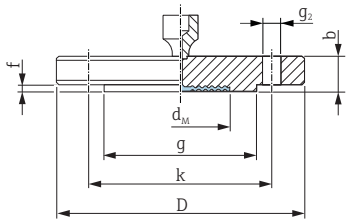

D *Diameter of flange*
b *Thickness*
g *Raised face*
f *Raised face*
k *Hole circle*
g_2 *Diameter of hole*
d_M *Max. diaphragm diameter*

Engineering unit in

Flange [1) 2) 3)]						Boltholes			Diaphragm seal		Approval [4)]	Option [5)]
Nominal diameter	Class	D	b	g	f	Number	g_2	k	d_M	Weight		
[in]	[lb./sq.in]	[in]	[in]	[in]	[in]		[in]	[in]	[in]	[kg (lb)]		
1	150	4.25	0.56	2	0.08	4	0.62	3.12	1.26	1.2 (2.65)	CRN [6)]	AC [7)]
1	300	4.88	0.69	2	0.08	4	0.75	3.5	1.26	1.3 (2.87)	CRN	AN [7)]
1	400/600	4.88	0.69	2	0.25	4	0.75	3.5	1.26	1.4 (3.09)	CRN	HC
1	900/1500	5.88	1.12	2	0.25	4	1	4	1.26	3.2 (7.06)	CRN	HN
1	2500	6.25	1.38	2	0.25	4	1	4.25	1.26	4.6 (10.14)	CRN	HO
1 ½	150	5	0.69	2.88	0.06	4	0.62	3.88	1.89	1.5 (3.31)	CRN	AE
1 ½	300	6.12	0.81	2.88	0.06	4	0.88	4.5	1.89	2.6 (5.73)	CRN	AQ
2	150	6	0.75	3.62	0.06	4	0.75	4.75	2.32	2.2 (4.85)	CRN	AF [7)]
2	300	6.5	0.88	3.62	0.06	8	0.75	5	2.32	3.4 (7.5)	CRN	AR [7)]
2	400/600	6.5	1	3.62	0.25	8	0.75	5	2.32	4.3 (9.48)	CRN	HF
2	900/1500	8.5	1.5	3.62	0.25	8	1	6.5	2.32	10.3 (22.71)	CRN	HR
2	2500	9.25	2	3.62	0.25	8	1.12	6.75	2.32	15.8 (34.84)	-	H3
3	150	7.5	0.94	5	0.06	4	0.75	6	3.5	5.1 (11.25)	CRN	AG [7)]
3	300	8.25	1.12	5	0.06	8	0.75	6	3.5	7.0 (15.44)	CRN	AS [7)]
4	150	9	0.94	6.19	0.06	8	0.75	7.5	3.5	7.2 (15.88)	CRN	AH
4	300	10	1.25	6.19	0.06	8	0.88	7.88	3.5	11.7 (25.8)	CRN	AT

1) material AISI 316/316L: Combination of AISI 316 for required pressure resistance and AISI 316L for required chemical resistance (dual rated)
2) The roughness of the surface in contact with the medium, including the raised face of the flanges (all standards) made of Alloy C276, Monel, tantalum, rhodium>gold, gold or PTFE is R_a< 0.8 µm (31.5 µin). Lower surface roughness on request.
3) The flange raised face is made of the same material as the process isolating diaphragm.
4) CSA approval: Product Configurator, order code for "Approval"
5) Product Configurator, order code for "Process connection"
6) CRN approval not for TempC membrane.
7) Alternatively available with TempC membrane. Diameter of process isolating diaphragm is modified in TempC version: nominal diameter 1": 1.1 in; 2": 2.40 in.

ASME flanges with barrel (extended diaphragm seal), connection dimensions in accordance with ASME B 16.5, raised face RF

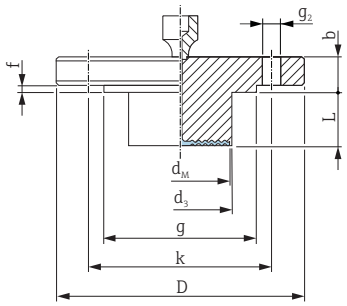

D *Diameter of flange*
b *Thickness*
g *Raised face*
k *Hole circle*
g_2 *Diameter of hole*
d_M *Max. diameter of the process isolating diaphragm*
d_3 *Barrel (extended diaphragm seal) diameter*
L *Barrel (extended diaphragm seal) length*

Engineering unit in

Flange [1) 2)]						Boltholes			Diaphragm seal		Approval [3)]	Option [4)]
Nominal diameter	Class	D	b	g	f	Number	g_2	k	d_M	Weight		
[in]	[lb./sq.in]	[in]	[in]	[in]	[in]		[in]	[in]	[in]	[kg (lb)]		
2	150	6	0.75	3.62	0.06	4	0.75	4.75	1.85	[5)]	CRN	J3 [5)]
3	150	7.5	0.94	5	0.06	4	0.75	6	2.83	[5)]	CRN	J4 [5)]
3	300	8.25	1.12	5	0.06	8	0.88	6.62	2.83	[5)]	CRN	J7 [5)]
4	150	9	0.94	6.19	0.06	8	0.75	7.5	3.5	[5)]	CRN	J5 [5)]
4	300	10	1.25	6.19	0.06	8	0.88	7.88	3.5	[5)]	CRN	J8 [5)]

1) Material: AISI 316/316L. Combination of AISI 316 for required pressure resistance and AISI 316L for required chemical resistance (dual rated)
2) In the case of process isolating diaphragms made of Alloy C276, Monel or tantalum, the raised face of the flange and the barrel pipe are made of 316L.
3) CSA approval: Product Configurator, order code for "Approval"
4) Product Configurator, order code for "Process connection"
5) Choice of 2", 4", 6" or 8" barrel (extended diaphragm seal), for diameter and weight of barrel (extended diaphragm seal) see the following table

Option [1)]	Nominal diameter	Class	(L)	d_3	Weight
	[in]	[lb./sq.in]	in (mm)	in (mm)	[kg (lb)]
J3	2	150	2 (50.8) / 4 (101.6) / 6 (152.4) / 8 (203.2)	1.9 (48.3)	3.0 (6.6)/ 3.4 (7.5)/ 3.9 (8.6)/ 4.4 (9.7)
J4	3	150	2 (50.8) / 4 (101.6) / 6 (152.4) / 8 (203.2)	2.99 (76)	6.0 (13.2) / 6.6 (14.5) / 7.1 (15.7) / 7.8 (17.2)
J7	3	300	2 (50.8) / 4 (101.6) / 6 (152.4) / 8 (203.2)	2.99 (76)	7.9 (17.4) / 8.5 (18.7) / 9.0 (19.9) / 9.6 (21.2)
J5	4	150	2 (50.8) / 4 (101.6) / 6 (152.4) / 8 (203.2)	3.7 (94)	8.6 (19) / 9.9 (21.8) / 11.2 (24.7) / 12.4 (27.3)
J8	4	300	2 (50.8) / 4 (101.6) / 6 (152.4) / 8 (203.2)	3.7 (94)	13.1 (28.9)/ 14.4 (31.6)/ 15.7 (34.6)/ 16.9 (37.3)

1) Product Configurator, order code for "Process connection"

JIS flanges, connection dimensions in accordance with JIS B 2220 BL, raised face RF

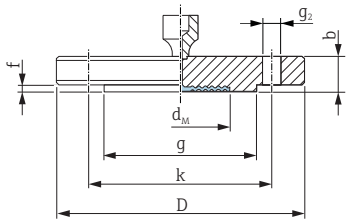

D *Diameter of flange*
b *Thickness*
g *Raised face*
f *Thickness of raised face*
k *Hole circle*
g_2 *Diameter of hole*

Engineering unit mm

Flange [1) 2) 3)]						Boltholes			Diaphragm seal		Option [4)]
Nominal diameter	Nominal pressure	D	b	g	f	Number	g_2	k	d_M	Weight	
		[mm]	[mm]	[mm]	[mm]		[mm]	[mm]	[mm]	[kg (lb)]	
25 A	10 K	125	14	67	1	4	19	90	32	1.5 (3.31)	KC
50 A	10 K	155	16	96	2	4	19	120	59	2.3 (5.07)	CF
80 A	10 K	185	18	127	2	8	19	150	89	3.3 (7.28)	KL
100 A	10 K	210	18	151	2	8	19	175	89	4.4 (9.7)	KH

1) material: AISI 316L
2) The roughness of the surface in contact with the medium, including the raised face of the flanges (all standards) made of Alloy C276, Monel, tantalum, rhodium>gold, gold or PTFE is R_a< 0.8 µm (31.5 µin). Lower surface roughness on request.
3) The flange raised face is made of the same material as the process isolating diaphragm.
4) Product Configurator, order code for "Process connection"

Process connections for PMP75

Welded separators

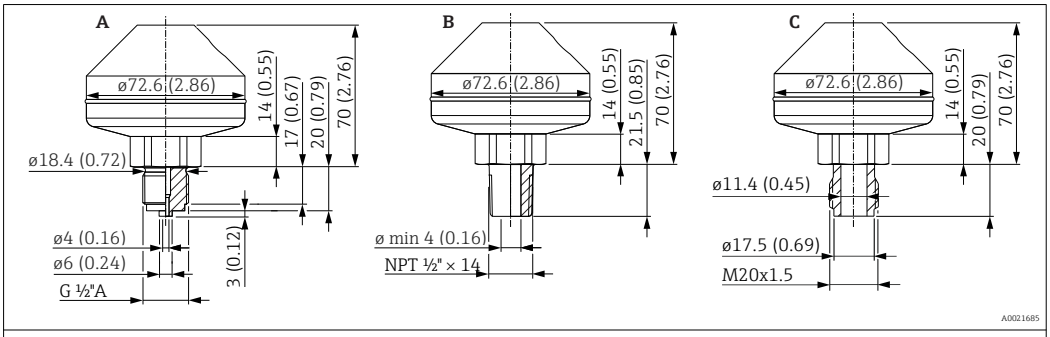

Engineering unit mm (in)

Position	Designation	Material	Measuring range [bar (psi)]	Nominal pressure	Approval	Weight [kg (lb)]	Option [1]
A	Welded, ISO 228 G ½ A EN837	AISI 316L	≤ 160 (2320)	PN 160	-	1.43 (3.15)	UA
B	Welded, ANSI ½ MNPT				CRN [2]		UB
C	Welded, thread DIN13 M20x1.5				-		UF

1) Product Configurator, order code for "Process connection"
2) CSA approval: Product Configurator, order code for "Approval"

Threaded separators

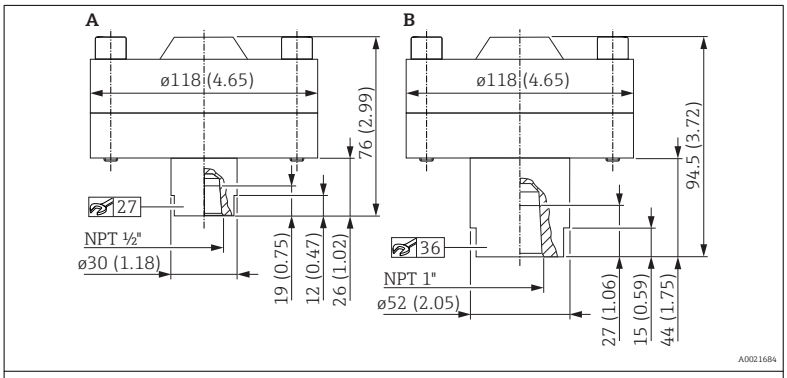

Engineering unit mm (in)

Position	Designation	Material	Measuring range [bar (psi)]	Nominal pressure	Weight [kg (lb)]	Option [1]
A	Threaded, ½" NPT with FKM Viton seal −20 to +200 °C (−4 to +392 °F)	AISI 316L screws made of A4	≤ 250 (3625)	PN 250	4.75 (10.47)	UG
B	Threaded, 1" NPT with FKM Viton seal −20 to +200 °C (−4 to +392 °F)				5.0 (11.03)	UH

1) Product Configurator, order code for "Process connection"

Cerabar S PMC71, PMP71, PMP75

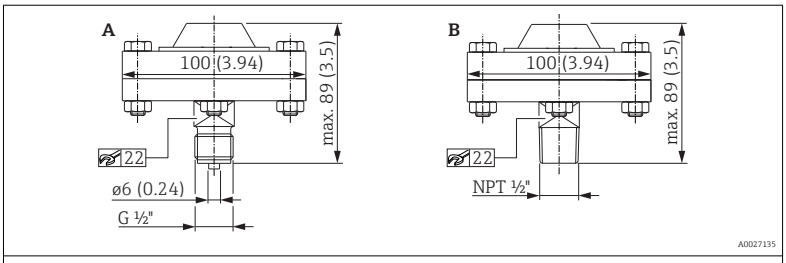

Engineering unit mm (in)

Position	Designation	Material	Measuring range [bar (psi)]	Nominal pressure	Weight [kg (lb)]	Option [1]
A	Threaded, ISO 228 G ½ A EN837 with PTFE seal −40 to +260 °C (−40 to +500 °F)	AISI 316L, screws made of A4	≤ 40 (580)	PN 40	1.43 (3.15)	UC [2]
B	Threaded, ANSI ½ MNPT with PTFE seal −40 to +260 °C (−40 to +500 °F)					UD [2]

1) Product Configurator, order code for "Process connection"
2) In combination with silicone oil, inert oil and plant oil.

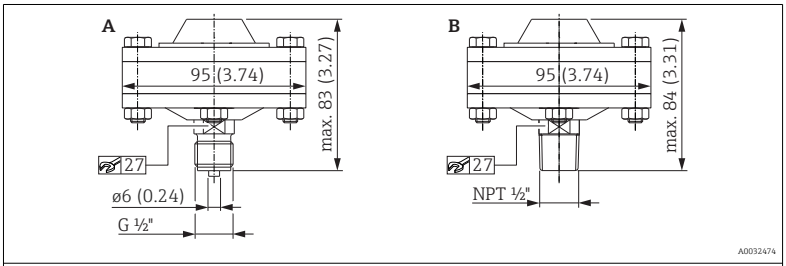

Engineering unit mm (in)

Position	Designation	Material	Measuring range [bar (psi)]	Nominal pressure	Weight [kg (lb)]	Option [1]
A	Threaded, ISO 228 G ½ A EN837 with metal seal (silver-plated) −60 to +400 °C (−76 to +752 °F)	AISI 316L, screws made of A4	≤ 40 (580)	PN 40	1.38 kg (3.04 lb)	UC [2]
B	Threaded, ANSI ½ MNPT with metal seal (silver-plated) −60 to +400 °C (−76 to +752 °F)					UD [2]

1) Product Configurator, order code for "Process connection"
2) In combination with high-temperature oil.

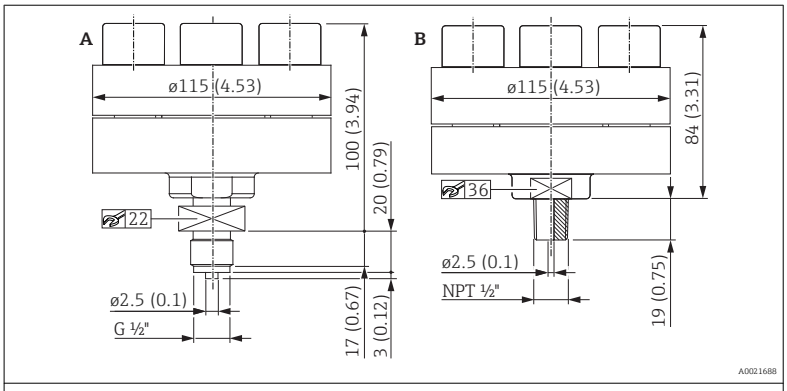

Engineering unit mm (in)

Position	Designation	Material	Measuring range [bar (psi)]	Nominal pressure [1]	Weight [kg (lb)]	Option [2]
A	Threaded, ISO 228 G ½ A EN837, with integrated seal lip −60 to +400 °C (−76 to +752 °F)	AISI 316L, screws made of A4	> 40 bar (580)	PN 400	4.75 (10.47)	UC
B	Threaded, ANSI ½ MNPT, with integrated seal lip −60 to +400 °C (−76 to +752 °F)					UD

1) This separator is assembled prior to delivery and must not be disassembled!
2) Product Configurator, order code for "Process connection"

Separate housing: Wall and pipe mounting with mounting bracket

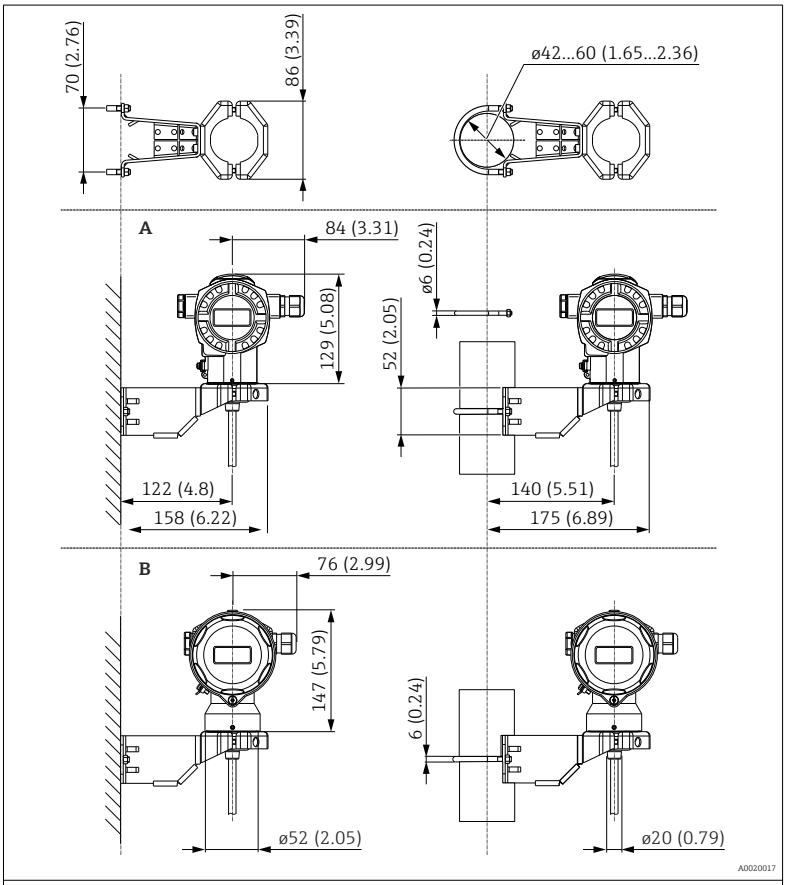

Engineering unit mm (in)

Position	Designation	Weight in kg (lb)		Option [1]
		Housing (T14 or T17)	Mounting bracket	
A	Dimensions with T14 housing, optional side display	→ 📖 55	0.5 (1.10)	U
B	Dimensions with T17 housing, optional side display			

1) Product Configurator, order code for "Additional options 2", version "G"

Also available for order as a separate accessory: Part number 71102216

Materials not in contact with process

Transmitter housing

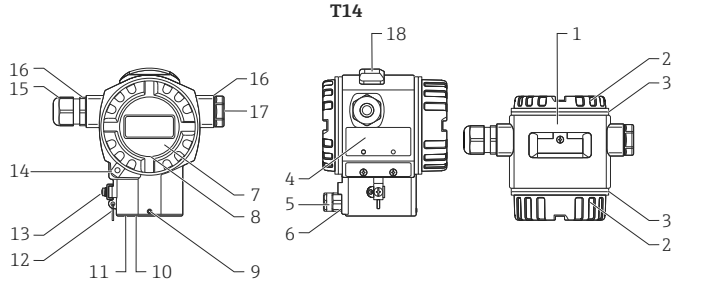

A0020019

Item number	Component part	Material
1	T14 housing, RAL 5012 (blue)	▪ Die-cast aluminum with protective powder-coating on polyester base ▪ Thread coating: Heat-curing lubricant varnish
1	T14 housing	▪ Precision casting AISI 316L (1.4435) ▪ Thread coating: Heat-curing lubricant varnish
2	Cover, RAL 7035 (gray)	Die-cast aluminum with protective powder-coating on polyester base
3	Cover seal	EPDM
4	Nameplates	▪ AISI 316L (1.4404), if T14 housing is precision-cast ▪ Anodized aluminum, if housing T14/T15 of die-cast aluminum
5	Pressure compensation filter	AISI 316L (1.4404) and PBT-FR
6	Pressure compensation filter, O-ring	VMQ or EPDM
7	Sight glass	Mineral glass
8	Sight glass seal	Silicone (VMQ)
9	Screw	A4
10	Sealing ring	EPDM
11	Snap ring	PA66-GF25
12	Snap ring for nameplates	AISI 304 (1.4301)/AISI 316 (1.4401)
13	External ground terminal	AISI 304 (1.4301)
14	Cover clamp	Clamp AISI 316L (1.4435), screw A4
15	Cable entry	Polyamide (PA) or CuZn nickel-plated
16	Seal of cable entry and plug	Silicone (VMQ)
17	Blind plug	PBT-GF30 FR, for dust ignition-proof: AISI 316L (1.4435)
18	External operation (keys and key cover), RAL 7035 (gray)	Polycarbonate PC-FR, screw A4
Devices with MID parts certificate	Seal wire	DIN 1367-0 St/Zn (soft galvanized steel)
Devices with MID parts certificate	Seals	Pb (lead)

Cerabar S PMC71, PMP71, PMP75

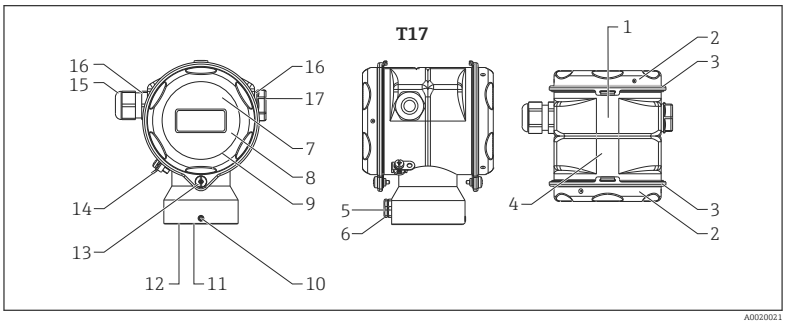

Item number	Component part	Material
1	T17 housing	AISI 316L (1.4404)
2	Cover	
3	Cover seal	EPDM
4	Nameplates	Lasered on
5	Pressure compensation filter	AISI 316L (1.4404) and PBT-FR
6	Pressure compensation filter, O-ring	VMQ or EPDM
7	Sight glass for non-hazardous area, ATEX Ex ia, NEPSI Zone 0/1 Ex ia, IECEx Zone 0/1 Ex ia, FM NI, FM IS, CSA IS	Polycarbonate (PC)
8	Sight glass for ATEX 1/2 D, ATEX 1/3 D, ATEX 1 GD, ATEX 1/2 GD, ATEX 3 G, FM DIP, CSA dust ignition-proof	Mineral glass
9	Sight glass seal	EPDM
10	Screw	A2-70
11	Sealing ring	EPDM
12	Snap ring	PA6
13	Screw	A4-50 Thread coating: Heat-curing lubricant varnish
14	External ground terminal	AISI 304 (1.4301)
15	Cable entry	Polyamide PA, for dust ignition-proof: CuZn nickel-plated
16	Seal of cable entry and plug	Silicone (VMQ)
17	Blind plug	PBT-GF30 FR, for dust ignition-proof: AISI 316L (1.4435)
Devices with MID parts certificate	Seal wire	DIN 1367-0 St/Zn (soft galvanized steel)
Devices with MID parts certificate	Seals	Pb (lead)

Connecting parts

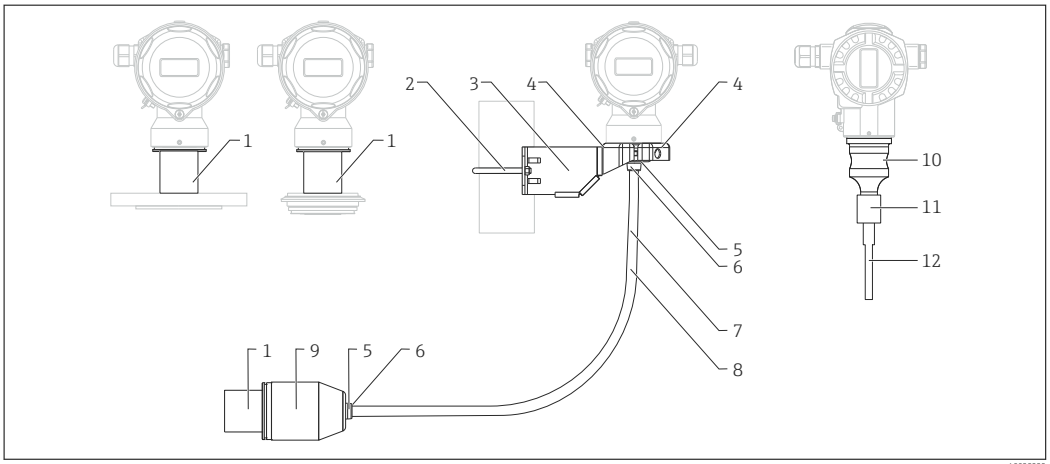

Item number	Component part	Material
1	Connection between the housing and process connection	AISI 316L (1.4404)
2	Mounting bracket	Bracket AISI 316L (1.4404)
3		Screw and nuts A4-70
4		Half-shells: AISI 316L (1.4404)
5	Seal for cable from separate housing	EPDM
6	Gland for cable from separate housing	AISI 316L (1.4404)
7	PE cable for separate housing	abrasion-proof cable with strain-relief Dynema members; shielded using aluminum-coated foil; insulated with polyethylene (PE-LD), black; copper wires, twisted, UV-resistant
8	FEP cable for separate housing	Abrasion-proof cable; shielded using galvanized steel wire netting; insulated with fluorinated ethylene propylene (FEP), black; copper cores, twisted, UV-resistant
9	Process connection adapter for separate housing	AISI 316L (1.4404)
10	Cell body	AISI 316L (1.4404)
11	Connection between body of measuring cell and capillary	AISI 316L (1.4404)
12	Heat-shrink tube (available only if capillary has PTFE or PVC sheath)	Polyolefin

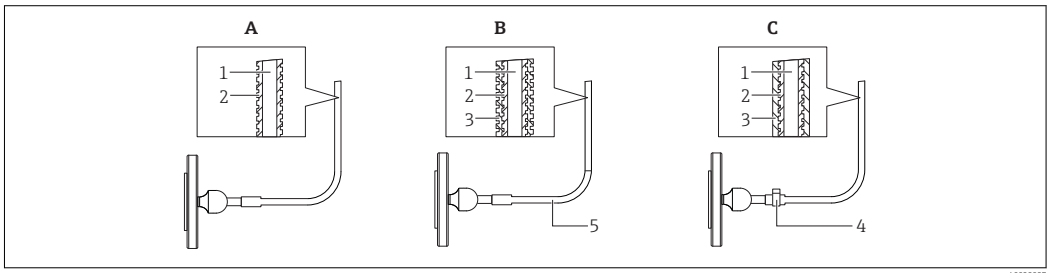

Position	Component part	A Standard [1] Armor for capillary	B PVC-coated Armor for capillary	C PTFE hose Armor for capillary
1	Capillary	AISI 316 Ti (1.4571)	AISI 316 Ti (1.4571)	AISI 316 Ti (1.4571)
2	Flexible armor for capillary	AISI 316L (1.4404) [2]	AISI 316L (1.4404)	AISI 316L (1.4404)
3	Coating/armor	-	PVC [3]	PTFE [4]
4	Single-ear clamp	-	-	1.4301
5	Shrink tubing at capillary junction	-	Polyolefin	-

1) If no option is specified when ordering, order option "SA" is supplied.
2) Product Configurator, order code for "Capillary armoring:" option "SA"
3) Product Configurator, order code for "Capillary armoring:" option "SB"
4) Product Configurator, order code for "Capillary armoring:" option "SC"

Weight

Component part	Weight
Housing	See "Housing" section
Process connection	See "Process connections" section
Capillary with armoring made of AISI 316L (1.4404)	0.16 kg/m (0.35 lb/m) + 0.35 kg (0.77 lb)
Capillary with armoring made of AISI 316L (PVC)	0.21 kg/m (0.46 lb/m) + 0.35 kg (0.77 lb)
Capillary with armoring made of AISI 316L (PTFE)	0.29 kg/m (0.64 lb/m) + 0.35 kg (0.77 lb)

Materials in contact with process

NOTICE

- The device components in contact with the process are specified in the "Mechanical construction" → 📄 54 and "Ordering information" → 📄 123 sections.

Delta-ferrite content

A delta-ferrite content of ≤ 3% can be guaranteed and certified for the wetted parts if option "8" is selected in the "Additional options 1" or "Additional options 2" order code in the Product Configurator.

If the PMC71 with hygienic process connections is selected, a delta-ferrite content of ≤ 1% can be guaranteed and certified if option "8" is selected in the "Additional options 1" or "Additional options 2" order code in the Product Configurator.

TSE Certificate of Suitability (Transmissible Spongiform Encephalopathy)

The following applies to all device components in contact with the process:

- They do not contain any materials derived from animals.
- No additives or operating materials derived from animals are used in production or processing.

Process connections

- "Clamp connections" and "Hygienic process connections": AISI 316L (DIN/EN material number 1.4435)
- Endress+Hauser supplies process connections with a threaded connection as well as DIN/ EN flanges made of stainless steel as per AISI 316L (DIN/EN material number 1.4404 or 1.4435). With regard to their stability-temperature property, the materials 1.4404 and 1.4435 are grouped together under 13E0 in EN 1092-1: 2001 Tab. 18. The chemical composition of the two materials can be identical.
- Some process connections are also available in alloy C276 (DIN/EN material number 2.4819). For this purpose see the information in the "Mechanical construction" section.

Process isolating diaphragm

Sensor	Designation	Option [1]
PMC71	Al_2O_3 aluminum-oxide ceramic FDA, ultra-pure 99.9 % [2] Ceraphire® (see also www.endress.com/ceraphire)	Standard
PMP71	AISI 316L	1
	AISI 316L with gold-rhodium coating	6
	Alloy C276 (2.4819)	2
PMP75	AISI 316L	1
	AISI 316L, TempC	E
	AISI 316L with gold-rhodium coating	6
	AISI 316L with 0.25 mm (0.01 in) PTFE coating	8
	Alloy C276 (2.4819)	2 [3]
	Monel (2.4360)	3 [3]
	AISI 316L with gold coating	4
	Tantalum (UNS R05200)	5 [3]

1) Product Configurator, order code for "Membrane material"
2) The US Food & Drug Administration (FDA) has no objections to the use of ceramics made of aluminum oxide as a surface material in contact with foodstuffs. This declaration is based on the FDA certificates of our ceramic suppliers
3) The material of the flange raised face is the same material as is used for the process isolating diaphragm. For devices with a barrel (extended diaphragm seal), the flange raised face and the barrel pipe are made of 316L.

Seals

Device	Designation	Option [1]
PMC71	FKM Viton	A
	FKM Viton, FDA	G
	EPDM	B
	FFKM Perlast G75LT	C
	Kalrez	D
	Chemraz	E
	NBR (FDA)/3A: HNBR (FDA)	F
	FKM Viton, cleaned for PWIS-free applications	L
	Kalrez, cleaned for PWIS-free applications	M
	FKM Viton, cleaned from oil and grease	1
	FKM Viton, cleaned for oxygen service, note pressure and temperature application limits	2

1) Product Configurator, "Seal" ordering feature

Fill fluid

PMP71

Designation	Option [1]
Silicone oil	A
Inert oil	F
Inert oil, cleaned from oil and grease	K
Inert oil, cleaned for oxygen service (observe application limits pressure/temperature)	N

1) Product Configurator, order code for "Fill fluid"

PMP75

Designation	Option [1] [2]
Silicone oil (food-safe FDA 21 CFR 175.105)	A
...m capillary, inert oil	B
...ft capillary, inert oil	C
Vegetable oil (food-safe FDA 21 CFR 172.856)	D
Inert oil	F
High-temperature oil, temperature isolator	G
Silicone oil, temperature isolator (food-safe FDA 21 CFR 175.105)	H
Vegetable oil, temperature isolator	J
Inert oil, cleaned from oil and grease	K
Inert oil, cleaned for oxygen service	N
...m capillary, silicone oil (food-safe FDA 21 CFR 175.105)	1
...ft capillary, silicone oil (food-safe FDA 21 CFR 175.105)	2
...m capillary, high-temperature oil	3
...ft capillary, high-temperature oil	4
...m capillary, vegetable oil (food-safe FDA 21 CFR 172.856)	5
...ft capillary, vegetable oil (food-safe FDA 21 CFR 172.856)	6
...m capillary, low-temperature oil	7
...ft capillary, low-temperature oil	8

1) Product Configurator, order code for "Fill fluid"
2) For diaphragm seal devices with 3-A and EHEDG certificates, only select filling oils with FDA approval!

Operability

Operating concept

Operator-oriented menu structure for user-specific tasks

- Commissioning
- Operation
- Diagnosis

Fast and safe commissioning

Guided menus for applications

Reliable operation

- Local operation possible in several languages
- Standardized operation at the device and in the operating tools
- Parameters relating to measured values can be locked/unlocked using the device's write protection switch, using the device software or via remote operation

Efficient diagnostics increase measurement availability

- Remedial measures are integrated in plain text
- Diverse simulation options

Local operation

Functions

Function	External operation (operating keys, optional, not T17 housing)	Internal operation (electronic insert)	Onsite display (optional)
Position adjustment (zero point correction)	✔	✔	✔
Setting lower-range value and upper-range value - reference pressure present at the device	✔ (HART only)	✔ (HART only)	✔
Device reset	✔	✔	✔
Locking and unlocking parameters relevant to the measured value	—	✔	✔
Value acceptance indicated by green LED	✔	✔	✔
Switching damping on and off	✔ (only if display is connected)	✔ (HART and PA only)	✔
Configuring the bus address of the device (PA)	—	✔	✔
Switching simulation mode on and off (FOUNDATION Fieldbus)	—	✔	✔

Operating the device using onsite display (optional)

A 4-line liquid crystal display (LCD) is used for display and operation. The onsite display shows measured values, dialog text as well as fault and notice messages in plain text, thereby supporting the user in every stage of operation.

The display can be removed for easy operation.

The device display can be turned in 90° steps.

Depending on the installation position of the device, this makes it easy to operate the device and read the measured value.

Functions:
- 8-digit measured value display including sign and decimal point and bar graph for
  - 4 to 20 mA HART (bar graph from 4 to 20 mA)
  - 1-5V DC (bar graph from 1 to 5 volt)
  - PROFIBUS PA (bar graph as graphic display of standardized value of AI block)
  - FOUNDATION Fieldbus (bar graph as graphic display of transducer output).
-
- Simple and complete menu guidance due to breakdown of parameters into several levels and groups
- Menu guidance in up to 8 languages
- Each parameter is given a 3-digit ID number for easy navigation.
- Option for configuring the display according to individual requirements and preferences, such as language, alternating display, display of other measured values such as sensor temperature, contrast setting.
- Comprehensive diagnostic functions (fault and warning message, peak-hold indicators, etc.).
- Rapid and safe commissioning with the Quick Setup menus

Overview

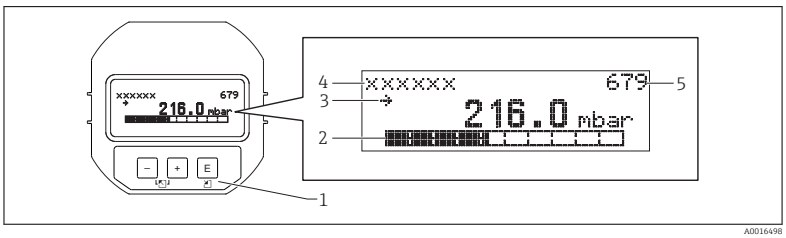

A0016498

1 Operating keys
2 Bargraph
3 Symbol
4 Header
5 Parameter ID number

Operating keys on the exterior of the device

With the aluminum housing (T14), the operating keys are located either outside on the housing, under the protection cap or inside on the electronic insert. With the stainless steel housing (T17), the operating keys are always located inside the housing on the electronic insert.

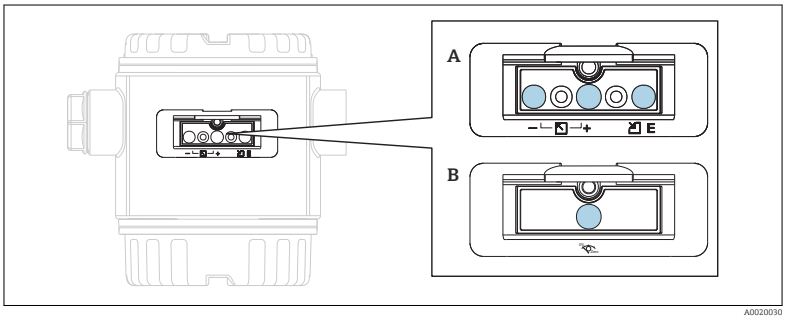

A0020030

A 1-5V DC and 4 to 20 mA HART
B PROFIBUS PA and FOUNDATION Fieldbus

The operating keys located externally on the device work on the Hall sensor principle. As a result, no additional openings are required in the device. This guarantees:

- Complete protection against environmental influences such as moisture and contamination.
- Simple operation without any tools.
- No wear.

Ordering information:

Product Configurator, order code for "Output, operation"

Operating keys and elements located internally on the electronic insert

Ordering information:

Product Configurator, order code for "Output, operation"

HART

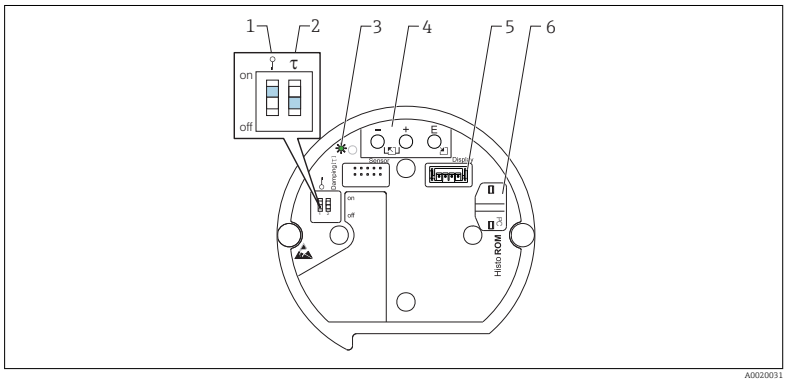

1 *DIP switch for locking/unlocking parameters relevant to the measured value*
2 *DIP switch for switching damping on/off*
3 *Green LED to indicate value being accepted*
4 *Operating keys*
5 *Slot for optional display*
6 *Slot for optional HistoROM®/M-DAT*

1-5V DC

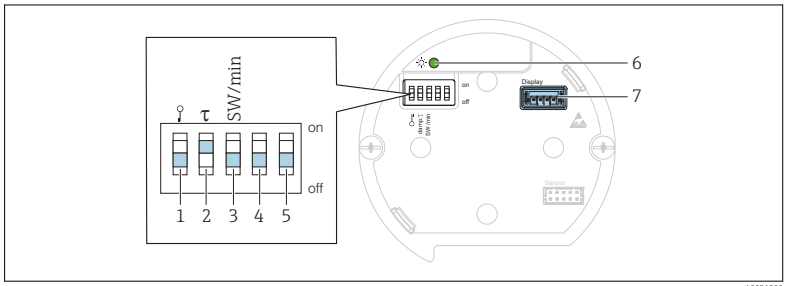

1 *DIP switch for locking/unlocking parameters relevant to the measured value*
2 *DIP switch for switching damping on/off*
3 *DIP switch for alarm voltage/alarm current SW / alarm min (0.9 V/~3.6 mA)*
4...5 *Not assigned*
6 *Green LED to indicate value being accepted*
7 *Slot for display*

PROFIBUS PA

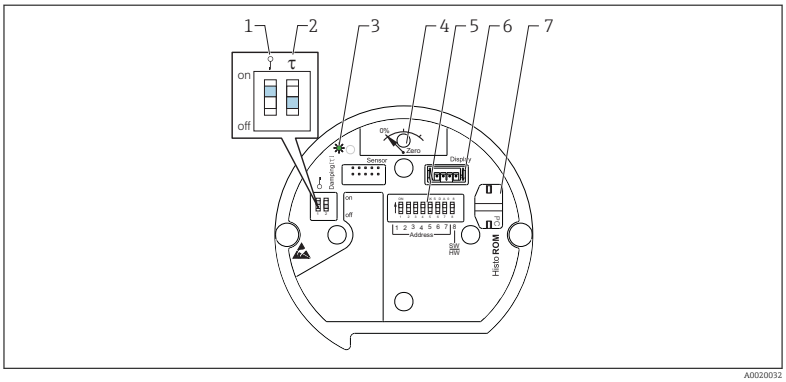

1 *DIP switch for locking/unlocking parameters relevant to the measured value*
2 *DIP switch for switching damping on/off*
3 *Green LED to indicate value being accepted*
4 *Key for position adjustment and device reset*
5 *DIP switch for bus address*
6 *Slot for optional display*
7 *Slot for optional HistoROM®/M-DAT*

FOUNDATION Fieldbus

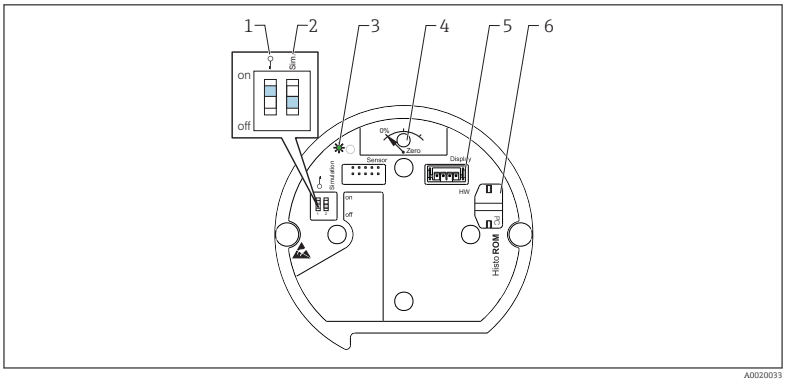

1 *DIP switch for locking/unlocking parameters relevant to the measured value*
2 *DIP switch for simulation mode on/off*
3 *Green LED to indicate value being accepted*
4 *Key for position adjustment and device reset*
5 *Slot for optional display*
6 *Slot for optional HistoROM®/M-DAT*

Remote operation

All software parameters are accessible depending on the position of the write protection switch on the device.

Hardware and software for remote operation [1]	HART	PROFIBUS PA	FOUNDATION Fieldbus
FieldCare	✔	✔	✔
FieldXpert SFX100	✔	–	✔

Hardware and software for remote operation [1]	HART	PROFIBUS PA	FOUNDATION Fieldbus
NI-FBUS Configurator	–	–	✔
HistoROM®/M-DAT	✔	✔	✔

1) Not for 1-5V DC

FieldCare

FieldCare is an Endress+Hauser asset management tool based on FDT technology. With FieldCare, you can configure all Endress+Hauser devices as well as devices from other manufacturers that support the FDT standard.

FieldCare supports the following functions:
- Configuration of transmitters in offline and online mode
- Device data upload/download (not for 1-5V DC)
- HistoROM®/M-DAT analysis
- Documentation of the measuring point

Connection options:
- HART via Commubox FXA195 and the USB interface of a computer
- PROFIBUS PA via segment coupler and PROFIBUS interface card
- Service interface with Commubox FXA291 and ToF adapter FXA291 (USB).

For further information please contact your local Endress+Hauser Sales Center.

Field Xpert SFX100

Field Xpert is an industrial PDA with integrated 3.5" touchscreen from Endress+Hauser based on Windows Mobile. It offers wireless communication via the optional VIATOR Bluetooth modem from Endress+Hauser. Field Xpert also works as a stand-alone device for asset management applications. For details, refer to BA00060S/04/EN.

Commubox FXA195

For intrinsically safe HART communication with FieldCare via the USB interface. For details refer to TI00404F/00/EN.

Commubox FXA291

The Commubox FXA291 connects Endress+Hauser field devices with a CDI interface (=Endress +Hauser Common Data Interface) to the USB interface of a personal computer or a notebook. For details refer to TI00405C/07/EN.

For the following Endress+Hauser devices you need the "ToF adapter FXA291" as an additional accessory:
- Cerabar S PMC71, PMP7x
- Deltabar S PMD7x, FMD7x
- Deltapilot S FMB70

ToF adapter FXA291

The ToF adapter FXA291 connects the Commubox FXA291 with devices of the ToF platform, pressure equipment and Gammapilot via the USB interface of a personal computer or a notebook. For details refer to KA00271F.

Profiboard

For connecting a PC to PROFIBUS.

Proficard

For connecting a laptop to PROFIBUS.

FF configuration program

FF configuration program, such as NI-FBUS Configurator, to
- connect devices with "FOUNDATION Fieldbus signal" into an FF network
- set FF-specific parameters

Remote operation via the NI-FBUS Configurator:

The NI-FBUS Configurator is an easy-to-use graphical environment for creating linkages, field-based control loops and schedules based on the FOUNDATION Fieldbus concept.

You can use the NI-FBUS Configurator to configure a fieldbus network as follows:
- Set block and device tags
- Set device addresses
- Create and edit function block control strategies (function block applications)
- Configure vendor-defined function and transducer blocks
- Create and edit schedules
- Read and write to function block control strategies (function block applications)
- Invoke Device Description (DD) methods
- Display DD menus
- Download a configuration
- Verify a configuration and compare it to a saved configuration
- Monitor a downloaded configuration
- Replace a virtual device by a real device
- Save and print a configuration

HistoROM®/M-DAT (optional)

The HistoROM®/M-DAT is a memory module that can be attached to any electronic insert (not for 1-5V DC). HistoROM®/M-DAT can be retrofitted at any stage (order number: 52027785).

Your benefits
- Quick and safe commissioning of the same measuring points by copying the configuration data of one transmitter to another transmitter
- Reliable process monitoring thanks to cyclical recording of pressure and sensor temperature measured values
- Simple diagnosis by recording diverse events such as alarms, configuration changes, counters for measuring range undershoot and overshoot for pressure and temperature as well as user limit overshoot and undershoot for pressure and temperature etc.
- Analysis and graphic evaluation of the events and process parameters via software (contained in scope of supply).

A CD with an Endress+Hauser operating program is also included in the scope of delivery. You can copy data from one transmitter to another transmitter when operating a FOUNDATION Fieldbus device via an FF configuration program. You need the Endress+Hauser FieldCare operating program, the Commubox FXA291 service interface and the ToF adapter FXA291 to be able to access the data and events saved in the HistoROM®/M-DAT.

Ordering information:

Product Configurator, order code for "Additional options:", version "N" or

Product Configurator, order code for "Application package:", option "EN" or

as a separate accessory (part no.: 52027785).

For further information please contact your local Endress+Hauser Sales Center.

System integration

The device can be given a tag name (max. 8 alphanumeric characters).

Description	Option [1]
Measuring point (TAG), see additional spec.	Z1
Bus address, see additional spec.	Z2

1) Product Configurator, order code for "Identification"

Planning instructions, diaphragm seal systems

NOTICE

Incorrect sizing/ordering of diaphragm seal systems

The performance and the permitted range of application of a diaphragm seal system depend on the process isolating diaphragm used, the filling oil, the coupling, the unit design and on the process and ambient conditions present in the individual application.

- ▶ To help you select the right diaphragm seal systems for your particular applications, Endress +Hauser provides its customers with the "Applicator Sizing Diaphragm Seal" selection tool, which is available free of charge at "www.endress.com/applicator" or as a download.

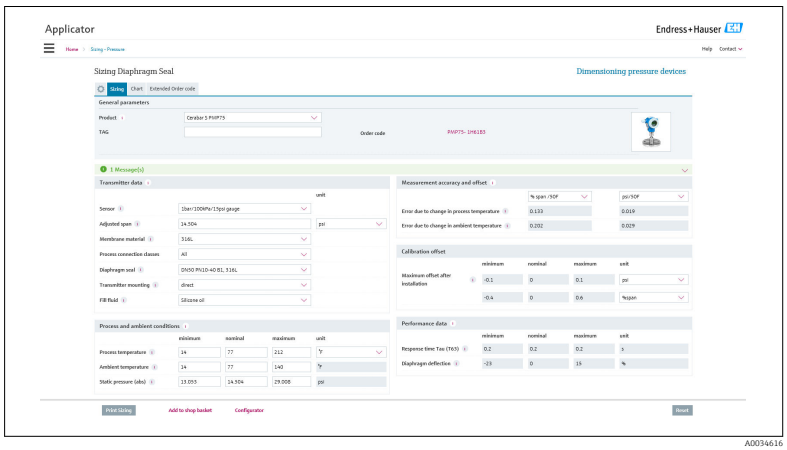

A0034616

For more detailed information or the layout of the optimum diaphragm seal solution for your application, please contact your local Endress+Hauser Sales Center.

Applications

Diaphragm seal systems should be used if the process and the device should be separated.
Diaphragm seal systems offer clear advantages in the following instances:

- In the case of extreme process temperatures
- For aggressive media
- In the case of process media that crystallize
- In the case of corrosive or highly various process media or process media with solids content
- In the case of heterogeneous and fibrous process media
- If extreme measuring point cleaning is necessary, or for very humid mounting locations
- If the measuring point is exposed to severe vibrations
- For mounting locations that are difficult to access

Design and operation mode

Diaphragm seals are separating equipment between the measuring system and the process.

A diaphragm seal system consists of:
- A diaphragm seal
- A capillary tube or temperature isolator if necessary
- Fill fluid
- A pressure transmitter

The process pressure acts via the process isolating diaphragm of a diaphragm seal on the liquid-filled system, which transfers the process pressure onto the sensor of the pressure transmitter.

Endress+Hauser delivers all diaphragm seal systems as welded versions. The system is hermetically sealed, which ensures the highest reliability.

The diaphragm seal determines the application range of the system by:
- The diameter of the process isolating diaphragm
- The stiffness and material of the process isolating diaphragm
- The design (oil volume)

Diameter of the process isolating diaphragm

The greater the diameter of the process isolating diaphragm (less stiff), the smaller the temperature effect on the measurement result.

Stiffness of the process isolating diaphragm

The stiffness depends on the diameter of the process isolating diaphragm, the material, any existing coating and the thickness and shape of the process isolating diaphragm. The thickness of the process isolating diaphragm and the shape are determined by the design. The stiffness of a process isolating diaphragm of a diaphragm seal influences the temperature operating range and the measuring error caused by temperature effects.

The Endress+Hauser TempC membrane: Highest accuracy and process safety when measuring pressure and differential pressure using diaphragm seals

To measure even more precisely in such applications and to increase process safety, Endress+Hauser has developed the TempC membrane based on a completely revolutionary technology. This membrane guarantees the highest level of accuracy and process safety in diaphragm seal applications.
- The very low temperature effect minimizes the influence of fluctuations of both process and ambient temperatures, thus guaranteeing accurate and stable measurements. Measurement inaccuracies caused by temperature are reduced to a minimum.
- The TempC membrane can be used at temperatures between −70 °C (−94 °F) and +400 °C (+752 °F). This guarantees maximum process safety even for very long sterilization and cleaning cycles (SIP/CIP) in tanks and pipes at high temperatures.
- Thanks to the TempC membrane, smaller dimension process connections are possible. With a smaller process connection, the new membrane measures at least as accurately as a conventional membrane with a larger diameter.
- Due to the geometry of the membrane, an overshoot occurs initially immediately following a temperature shock. This results in a transient response, the duration and deviation of which are significantly less compared to traditional membrane types. In the case of batch processes, these shorter recovery times mean a far higher level of availability of the production facilities. For TempC membranes, the effect of the overshoot on the output signal can be reduced by adjusting the damping.

Ordering information:

See the Product Configurator for the individual process connection and the choice of process isolating diaphragm.

Selection in the Applicator:

Under "Transmitter data" in the "Membrane material" field.

Capillary

As standard, capillaries with an internal diameter of 1 mm (0.04 in) are used.

The capillary tube influences the thermal change, the ambient temperature operating range and the response time of a diaphragm seal system as a result of its length and internal diameter.

Filling oil

When selecting the filling oil, the media and ambient temperature as well as the operating pressure are of crucial importance. Observe the temperatures and pressures during commissioning and cleaning. A further selection criterion is the compatibility of the filling oil with the requirements of the process media. For this reason, only filling oils that are harmless to health may be used in the food industry, such as vegetable oil or silicone oil (see also the following section on "diaphragm seal filling oils").

The filling oil used influences the thermal change, the temperature operating range of a diaphragm seal system and the response time. A temperature change results in a volume change of the filling oil. The volume change is dependent on the expansion coefficient and on the volume of the filling oil at calibration temperature (constant in range: +21 to +33 °C (+70 to +91 °F)). The application range can be extended by a filling oil with a lower expansion coefficient and a shorter capillary.

For example, the filling oil expands in the event of a temperature increase. The additional volume presses against the process isolating diaphragm of a diaphragm seal. The stiffer a process isolating diaphragm is, the greater its return force, which counteracts a volume change and acts on the measuring cell together with the operating pressure, thus shifting the zero point.

Pressure transmitter

The pressure transmitter influences the temperature operating range, the TK zero point and the response time as a result of its volume change. The volume change is the volume that has to be shifted to pass through the complete measuring range.

Pressure transmitters from Endress+Hauser are optimized with regard to minimum volume change.

Diaphragm seal filling oils

Filling oil	Permissible temperature range [1] at 0.05 bar (0.725 psi) ≤ p_{abs} ≤ 1 bar (14.5 psi)	Permitted temperature range [1] at p_{abs} ≥1 bar (14.5 psi)	Option [2]
Silicone oil	−40 to +180 °C (−40 to +356 °F)	−40 to +250 °C (−40 to +482 °F)	A, H, 1 or 2
High-temperature oil	−10 to +200 °C (+14 to +392 °F)	−10 to +400 °C (+14 to +752 °F) [3] [4] [5]	G, 3 or 4
Inert oil	−40 to +80 °C (−40 to +176 °F)	−40 to +175 °C (−40 to +347 °F)	F or N
Vegetable oil	−10 to +120 °C (+14 to +248 °F)	−10 to +200 °C (+14 to +392 °F)	D, 5 or 6
Low-temperature oil	−70 to +80 °C (−94 to +176 °F)	−70 to +180 °C (−94 to +356 °F)	7 or 8

1) Observe temperature limits of the device and of the system
2) Product Configurator, "Fill fluid" ordering feature
3) 325 °C (617 °F) at ≥1 bar (14.5 psi)absolute pressure.
4) 350 °C (662 °F) at ≥1 bar (14.5 psi) absolute pressure (max. 200 hours).
5) 400 °C (752 °F) at ≥1 bar (14.5 psi) absolute pressure (max. 10 hours).

Additional data:

Filling oil	Density [g/cm3] / [SGU]	Viscosity [mm²/s] / [cSt] at 25 °C (77 °F)	Expansion coefficient [1] [1/K]	Notes [2]	Option [3]
Silicone oil	0.96	100	0.00096	suitable for foods FDA 21 CFR 175.105	A, H, 1 or 2
High-temperature oil	1.00	150	0.00096	High temperatures	G, 3 or 4
Inert oil	1.87	27	0.000876	For ultrapure gas and oxygen applications	F or N
Vegetable oil	0.94	9.5	0.00101	suitable for foods FDA 21 CFR 172.856	D, 5 or 6
Low-temperature oil	0.92	4.4	0.00108	Low temperatures	7 or 8

1) The thermal change in the diaphragm seal and other important technical features can be found in the "Applicator Sizing Diaphragm Seal" selection tool.
2) Only select FDA-approved filling oils for diaphragm seal devices with 3-A and EHEDG certification!
3) Product Configurator, "Fill fluid" ordering feature

Information on cleaning

Endress+Hauser provides flushing rings as an accessory to enable cleaning of the process isolating diaphragm without removing the transmitter from the process.

For further information please contact your local Endress+Hauser Sales Center.

We recommend you perform CIP (cleaning in place (hot water)) before SIP (sterilization in place (steam)) for pipe diaphragm seals. A frequent use of sterilization in place (SIP) will increase the stress on the process isolating diaphragm. Under unfavorable circumstances in the long term view we cannot exclude that a frequent temperature change could lead to a material fatigue of the process isolating diaphragm and possibly to a leakage.

Installation instructions

Diaphragm seal systems

- The diaphragm seal together with the transmitter form a closed, calibrated system, which is filled through ports in the diaphragm seal and in the measuring system of the transmitter. These ports are sealed and must not be opened.
- For devices with a temperature isolator or capillary, a suitable fastening device (mounting bracket) is recommended.
- When mounting, sufficient strain relief must be provided for the capillary line to prevent the capillary from bending (capillary bending radius ≥ 100 mm (3.94 in)
- For more detailed installation instructions, Endress+Hauser provides its customers with the free "Applicator Sizing Diaphragm Seal" selection tool, which is available online at "www.endress.com/applicator" or as a download.

Capillary

In order to obtain more precise measurement results and to avoid a defect in the device, mount the capillaries as follows:
- vibration-free (in order to avoid additional pressure fluctuations)
- not in the vicinity of heating or cooling lines
- insulate if the ambient temperature is below or above the reference temperature
- with a bending radius ≥ 100 mm (3.94 in)
- When using diaphragm seal systems with a capillary, sufficient strain relief must be provided to prevent the capillary from bending (capillary bending radius ≥ 100 mm (3.94 in)).
- In the case of devices with diaphragm seals and capillaries, the zero point shift caused by the hydrostatic pressure of the filling liquid column in the capillaries must be taken into account when selecting the measuring cell. If a measuring cell with a small measuring range is selected, a position adjustment can cause range violation.

Heat insulation

The PMP75 must only be insulated up to a certain height. The maximum permitted insulation height is indicated on the devices and applies to an insulation material with a heat conductivity ≤ 0.04 W/(m x K) and to the maximum permitted ambient and process temperature. The data were determined under the most critical application "quiescent air". Maximum permitted insulation height, here indicated on a PMP75 with a flange:

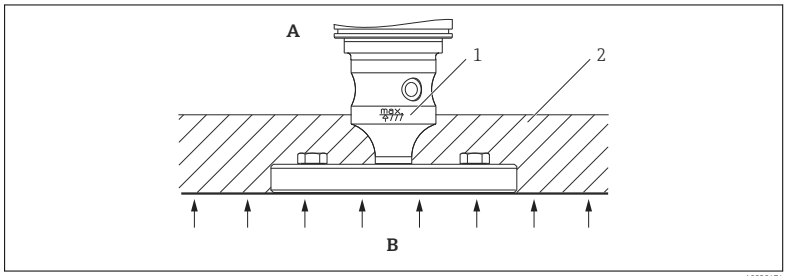

A0020474

A Ambient temperature ≤ 80 °C (176 °F)
B Process temperature 400 °C (752 °F), depends on the diaphragm seal filling oil used
1 Maximum insulation height
2 Insulation material

Mounting with temperature isolator

Endress+Hauser recommends the use of temperature isolators in the event of constant extreme fluid temperatures which cause the maximum permitted electronics temperature of +85 °C (+185 °F) to be exceeded. Diaphragm seal systems with temperature isolators can be used at temperatures up to a maximum of +400 °C (+752 °F) depending on the filling oil used → 🗎 115, see the "Diaphragm seal filling oils" section. To minimize the influence of rising heat, Endress+Hauser recommends the device be mounted horizontally or with the housing pointing downwards. The additional installation height also brings about a zero point shift of maximum 21 mbar (0.315 psi)due to the hydrostatic column in the temperature isolator. You can correct this zero point shift at the device.

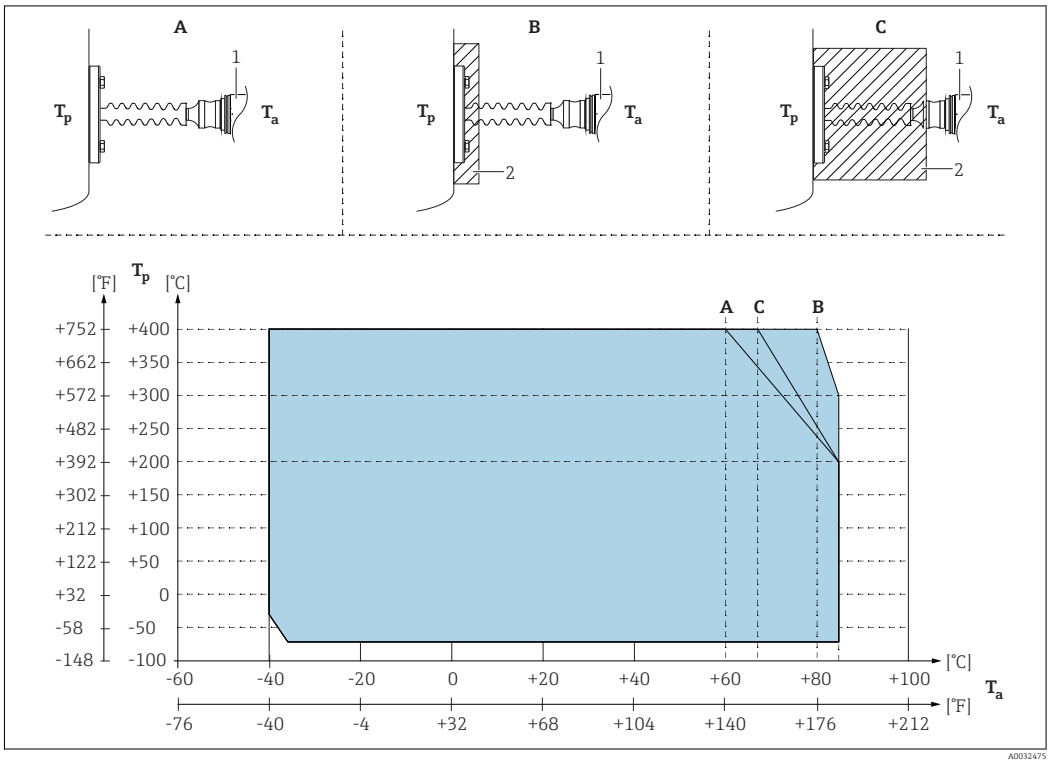

1 Transmitter
2 Insulation material

Position	Insulation	Ambient temperature(T_a) at transmitter	Maximum process temperature (T_p)
A	No insulation	60 °C (140 °F)	400 °C (752 °F) [1]
		85 °C (185 °F)	200 °C (392 °F)
B	30 mm (1.18 in) Insulation	80 °C (176 °F)	400 °C (752 °F) [1]
		85 °C (185 °F)	300 °C (572 °F)
C	Maximum insulation	67 °C (153 °F)	400 °C (752 °F) [1]
		85 °C (185 °F)	200 °C (392 °F)

1) Process temperature: max.400 °C (752 °F), depending on the diaphragm seal filling oil used

Vacuum applications

Installation instructions

For vacuum applications, pressure transmitters with a ceramic measuring membrane (oil-free) are preferable.

For applications under vacuum, Endress+Hauser recommends mounting the pressure transmitter below the diaphragm seal. This prevents vacuum loading of the diaphragm seal caused by the presence of fill fluid in the capillary.

When the pressure transmitter is mounted above the diaphragm seal, the maximum height difference H1 in accordance with the illustration below must not be exceeded. The following graphic depicts mounting above the lower diaphragm seal:

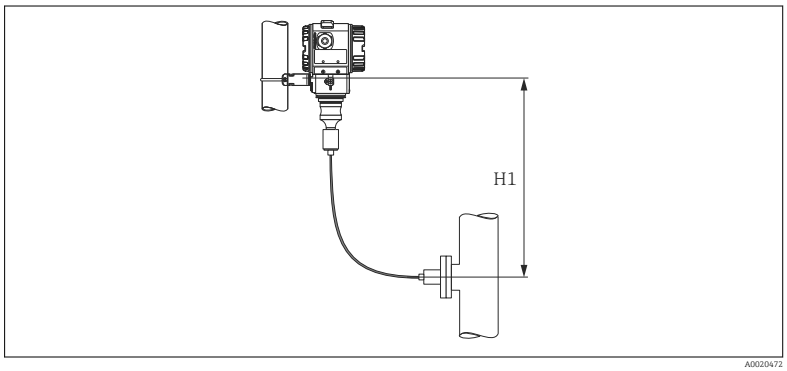

A0020472

The maximum height difference depends on the density of the filling oil and the smallest ever pressure that is permitted to occur at the diaphragm seal (empty container), see the following diagram. The following diagram depicts the maximum installation height above the diaphragm seal for vacuum applications.

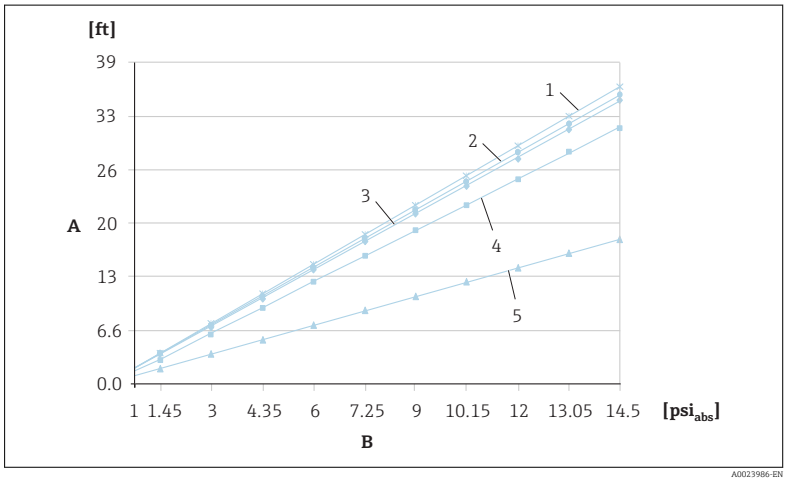

A0023986-EN

A Height difference H1
B Pressure at diaphragm seal
1 Low-temperature oil
2 Vegetable oil
3 Silicone oil
4 High-temperature oil
5 Inert oil

Certificates and approvals

CE mark

The device meets the legal requirements of the relevant EC directives. Endress+Hauser confirms that the device has been successfully tested by applying the CE mark.

RoHS

The measuring system complies with European Directive 2002/96/EC.

RCM-Tick marking

The supplied product or measuring system meets the ACMA (Australian Communications and Media Authority) requirements for network integrity, interoperability, performance characteristics as well as health and safety regulations. Here, especially the regulatory arrangements for electromagnetic compatibility are met. The products are labelled with the RCM- Tick marking on the name plate.

A0029561

Ex approvals

- ATEX
- FM
- CSA
- NEPSI
- IECEx
- TIIS
- Also combinations of different approvals

All explosion protection data are given in separate documentation which is available upon request. The Ex documentation is supplied as standard with all Ex devices→ 🗎 127.

EAC conformity

The measuring system meets the legal requirements of the applicable EAC guidelines. These are listed in the corresponding EAC Declaration of Conformity together with the standards applied.

Endress+Hauser confirms successful testing of the device by affixing to it the EAC mark.

Suitable for hygiene applications

The device is available with hygienic process connections (overview: see order code). The materials of the hygienic process connections in contact with foodstuffs comply with framework Regulation (EC) 1935/2004.

⚠ CAUTION

Contamination in the process!

Risk of contamination if incorrect seals and parts are used!

- ▶ To avoid the risk of contamination, when installing the device comply with the design principles of EHEDG, Guideline 37 "Hygienic Design and Application of Sensors" and Guideline 16 "Hygienic Pipe Couplings".
- ▶ Suitable assemblies and seals must be used to ensure hygienic design in accordance with 3-A SSI and EHEDG specifications.
- ▶ The leak-proof connections can be cleaned with the cleaning methods typical of this industry (CIP and SIP). Attention must be paid to the pressure and temperature specifications of the sensor and process connections for CIP and SIP processes (clean in place/sterilize in place).
- ▶ For diaphragm seal devices with 3-A and EHEDG certificates, only select filling oils with FDA approval!

A0026782

The gap-free connections can be cleaned of all residue using the usual cleaning methods within this industry.

Functional safety SIL/ IEC 61508 Declaration of Conformity (optional)

The Cerabar S with 4 to 20 mA output signal has been developed in accordance with the IEC 61508 standard. These devices can be used to monitor the process level and pressure up to SIL 3. For a detailed description of safety functions with the Cerabar S, settings and functional safety data, see the "Functional safety manual - Cerabar S" SD00190P/00.

For devices up to SIL 3 / IEC 61508 Declarations of Conformity see:

Ordering information:

Product Configurator, order code for "Additional options 1" and "Additional options 2", version "E".

Overfill protection

WHG (see document ZE00260P/00/EN)

Ordering information:

Product Configurator, order code for "Approval", option "6".

CRN approval

Some device versions have CRN approval. A CRN-approved process connection with a CSA approval must be ordered for a CRN-approved device. These devices are fitted with a separate nameplate with the registration number CRN 0F10525.5C .

PMP75 devices with a capillary are not CRN-approved.

Ordering information:

Product Configurator, order code for "Process connection; material" and

Product Configurator, order code for "Approval" (only in conjunction with an approved process connection)

Other standards and guidelines

The applicable European guidelines and standards can be found in the relevant EU Declarations of Conformity. The following were also applied:

DIN EN 60770 (IEC 60770):

Transmitters for use in industrial-process control systems. Part 1: Methods for operating performance evaluation

DIN 16086:

Electrical pressure measuring instruments, pressure sensors, pressure transmitters, pressure measuring instruments, concepts, specifications on data sheets

EN 61326-X:

EMC product family standard for electrical equipment for measurement, control and laboratory use.

EN 60529:

Degrees of protection provided by enclosures (IP code)

WELMEC guide 8.8:

General and Administrative Aspects of the Voluntary System of Modular Evaluation of Measuring instruments under the MID.

OIML R117-1 Edition 2007 (E):

Dynamic measuring systems for liquids other than water.

EN 12405-1/A1 Edition 2006:

Gas meters – Conversion devices – Part 1: Volume conversion

Pressure Equipment Directive 2014/68/EU (PED)

Pressure equipment with allowable pressure ≤ 200 bar (2 900 psi)

Pressure equipment (having a maximum allowable pressure PS ≤ 200 bar (2 900 psi)) can be classified as pressurized equipment in accordance with Pressure Equipment Directive 2014/68/EU. If the maximum allowable pressure is ≤ 200 bar (2 900 psi) and the pressurized volume of the pressure equipment is ≤ 0.1 l, the pressure equipment is subject to the Pressure Equipment Directive (cf. Pressure Equipment Directive 2014/68/EU, Article 4, point 3). The Pressure Equipment Directive only requires that the pressure equipment shall be designed and manufactured in accordance with the "sound engineering practice of a Member State".

Reasons:

- Pressure Equipment Directive (PED) 2014/68/EU Article 4, point 3
- Pressure equipment directive 2014/68/EU, Commission's Working Group "Pressure", Guideline A-05 + A-06

Note:

A partial examination shall be performed for pressure instruments that are part of safety equipment for the protection of a pipe or vessel from exceeding allowable limits (equipment with safety function in accordance with Pressure Equipment Directive 2014/68/EU, Article 2, point 4).

Pressure equipment with allowable pressure > 200 bar (2 900 psi)

Pressure equipment designated for application in every process fluid having a pressurized volume of <0.1 l and a max. allowable pressure PS > 200 bar (2 900 psi) shall satisfy the essential safety requirements set out in Annex I of the Pressure Equipment Directive 2014/68/EU. According to Article 13 pressure equipment shall be classified by category in accordance with Annex II. The conformity assessment of the pressure equipment shall be determined by the category I under consideration of the above-mentioned low pressurized volume. These devices shall be provided with CE marking.

Reasons:

- Pressure Equipment Directive 2014/68/EU, Article 13, Annex II
- Pressure equipment directive 2014/68/EU, Commission's Working Group "Pressure", Guideline A-05

Note:

A partial examination shall be performed for pressure instruments that are part of safety equipment for the protection of a pipe or vessel from exceeding allowable limits (equipment with safety function in accordance with Pressure Equipment Directive 2014/68/EU, Article 2, point 4).

The following also applies:

- PMP71 with threaded connection and internal process isolating diaphragm PN > 200 as well as oval flange adapter PN > 200:
  Suitable for stable gases in group 1, category I, module A
- PMP75 with pipe diaphragm seal ≥ 1.5"/PN40:
  Suitable for stable gases in group 1, category II, module A2
- PMP75 with barriers PN > 200 ≥ 1.5"/PN40:
  Suitable for stable gases in group 1, category I, module A
- PMP75 with threaded connection PN > 200:
  Suitable for stable gases in group 1, category I, module A

Manufacturer declarations

Depending on the desired configuration, the following documents can be ordered additionally with the device:
- FDA conformity
- TSE-free: materials free from animal origin
- Regulation (EC) No. 2023/2006 (GMP)
- Regulation (EC) No. 1935/2004 on materials and articles intended to come into contact with food

Downloading the Declaration of Conformity

http://www.endress.com/en/download

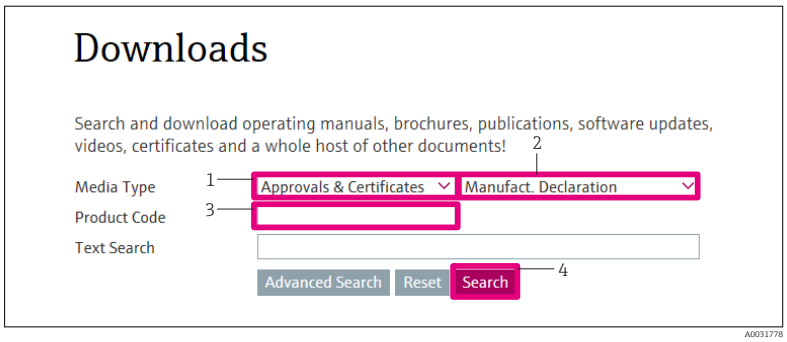

1. Select "Approvals & Certificates"
2. Select "Manufact. Declaration"
3. Enter the required product code
4. Click "Search"

The available downloads are displayed.

Marine approval

- GL (German Lloyd)
- ABS

Ordering information:

Product Configurator, order code for "Additional options 1" or "Additional options 2", version "S".

Drinking water approval

PMC71/PMP71: NSF 61 approval

PMC71/PMP71: UBA/W270 approval (ordering information as for NSF approval: Product Configurator, order code for "Additional options 1" or "Additional options 2" option "F".)

Ordering information:

Product Configurator, order code for "Additional options 1" or Additional options 2", version "F".

Approvals for custody transfer

All aspects of OIML R117-1 Edition 2007 (E) and EN 12405-1/A1 Edition 2006 are fulfilled.

MID Parts Certificate

TC7975

Classification of process sealing between electrical systems and (flammable or combustible) process fluids in accordance with ANSI/ISA 12.27.01

Endress+Hauser devices are designed in accordance with ANSI/ISA 12.27.01. allowing the user to waive the use and save the cost of installing external secondary process seals in the conduit as required by the process sealing sections of ANSI/NFPA 70 (NEC) and CSA 22.1 (CEC). These instruments comply with the North American installation practice and provide a very safe and cost-

saving installation for pressurized applications with hazardous fluids. Please refer to the following table for the seal class assigned (single seal or dual seal):

Device	Approval	Remark	Single seal MWP	Dual seal MWP
PMC71	CSA C/US IS, XP	except separate housing	-	60 bar (900 psi)
	CSA C/US IS	With separate housing	40 bar (600 psi)	-
PMP71	CSA C/US XP, XP+IS	except separate housing	400 bar (6 000 psi)	-
	CSA C/US IS	except separate housing	>200 to 400 bar (3 000 to 6 000 psi)	≤200 bar (3 000 psi)
	CSA C/US IS	With separate housing	400 bar (6 000 psi)	-
PMP75	XP, XP+IS	except separate housing	400 bar (6 000 psi)	-
	CSA C/US IS	except separate housing	>200 to 400 bar (3 000 to 6 000 psi)	≤200 bar (3 000 psi)
	CSA C/US IS	With separate housing	400 bar (6 000 psi)	-

Further information can be found in the control drawings of the relevant devices.

Inspection certificate

Designation	PMC71	PMP71	PMP75	Option
3.1 Material documentation, wetted metal parts, EN10204-3.1 inspection certificate	✔	✔	✔	B [1) 3)]
Declaration of Conformity NACE MR0175, wetted metal parts	—	✔	✔	C [1) 3)]
EN10204-3.1 material, NACE MR0175, wetted metal parts, inspection certificate	—	✔	✔	D [1) 3)]
Individual test, test report	✔	✔	✔	3 [1)]
Pressure test, internal procedure, test report	✔	✔	✔	4 [1)]
Helium leak test, internal procedure, test report	✔	✔	—	5 [1)]
EN10204-3.1 material wetted parts +Ra, Ra= surface roughness, dimensional check, inspection certificate	✔	—	—	6 [1)]
Delta-Ferrit measurement, internal procedure, wetted metallic parts, inspection certificate	✔	—	—	8 [1)]
3.1 Material documentation, wetted metal parts, EN10204-3.1 inspection certificate	✔	✔	✔	JA [2) 3)]
Declaration of Conformity NACE MR0175, wetted metal parts	✔	✔	✔	JB [2) 3)]
Declaration of Conformity NACE MR0103, wetted metal parts	✔	✔	✔	JE [2) 3)]
Surface finish measurement ISO4287/Ra, wetted metal parts, inspection certificate	✔	—	✔	KB [2)]
Helium leak test, internal procedure, inspection certificate	✔	✔	✔	KD [2)]
Pressure test, internal procedure, inspection certificate	✔	✔	✔	KE [2)]
Delta-Ferrit measurement, internal procedure, wetted metallic parts, inspection certificate	✔	—	✔	KF [2)]
PMI test (XRF), internal procedure, metal parts in contact with the medium	✔	✔	✔	KG [2)]
Welding documentation, wetted/pressurized seams	—	✔	—	KS [2)]

1) Product Configurator, order code for "Additional options 1" and "Additional options 2"
2) Product Configurator, order code for "Test, Certificate"
3) The choice of this feature for coated process isolating diaphragms/process connections refers to the metal base material.

Calibration

Designation	PMC71	PMP71	PMP75	Option [1)]
Sensor range; mbar/bar	✔	✔	✔	1
Sensor range; kPa/MPa	✔	✔	✔	2
Sensor range; mmH2O/mH2O	✔	✔	✔	3
Sensor range; inH2O/ftH2O	✔	✔	✔	4

Designation	PMC71	PMP71	PMP75	Option [1]
Sensor range; psi	✔	✔	✔	6
Factory calibration certificate, 5-point; see additional specification	✔	✔	✔	C
DKD/DAkkS certificate; see additional specification	✔	✔	✔	D
Customized pressure; see additional specification	✔	✔	✔	E
Customized level; see additional specification	✔	✔	✔	F
Customized pressure + 5-point factory calibration certificate; see additional specification	✔	✔	✔	H
Customized level + 5-point factory calibration certificate; see additional specification	✔	✔	✔	I
Platinum; see additional specification	✔	✔	—	K
Platinum + factory calibration certificate 5-point; see additional specification	✔	✔	—	L
Platinum + DKD/DAkkS certificate; see additional specification	✔	✔	—	M

1) Product Configurator, order code for "Calibration; unit"

Service

Designation	Option [1] (not for 1-5V DC)
Cleaned of oil+grease [2]	HA
Cleaned for oxygen service [2]	HB
Cleaned of PWIS (paint-wetting impairment substances) [2]	HC

1) Product Configurator, order code for "Service"
2) Device only, not accessories or enclosed accessories.

Ordering information

Detailed ordering information is available from the following sources:
- In the Product Configurator on the Endress+Hauser website: www.endress.com -> Click "Corporate" -> Select your country -> Click "Products" -> Select the product using the filters and search field -> Open product page -> The "Configure" button to the right of the product image opens the Product Configurator.
- From your Endress+Hauser Sales Center: www.addresses.endress.com

Product Configurator - the tool for individual product configuration
- Up-to-the-minute configuration data
- Depending on the device: Direct input of measuring point-specific information such as measuring range or operating language
- Automatic verification of exclusion criteria
- Automatic creation of the order code and its breakdown in PDF or Excel output format
- Ability to order directly from the Endress+Hauser Online Shop

Scope of delivery
- Measuring device
- Optional accessories
- Brief Operating Instructions
- Certificates of calibration
- Optional certificates

Measuring point (TAG)

Ordering feature	895: Marking
Option	Z1: Tagging (TAG), see additional spec.
Position of the measuring point marking	To be selected in the additional specifications: ▪ Tag plate Stainless Steel ▪ Self-adhesive paper label ▪ Supplied label/plate ▪ RFID TAG ▪ RFID TAG + Tag plate Stainless Steel ▪ RFID TAG + Self-adhesive paper label ▪ RFID TAG + Supplied label/plate
Definition of the measuring point designation	To be defined in the additional specifications: 3 lines containing up to 18 characters each The measuring point designation appears on the selected label and/or the RFID TAG.
Identification on electronic nameplate (ENP)	32 characters

Configuration data sheet

Pressure

The following configuration data sheet must be completed and included with the order if the option "E" or "H" has been selected in the Product Configurator, order code for "Calibration; Unit".

Pressure unit

❑ mbar	❑ mmH_2O [1]	❑ mmHg [2]	❑ Pascal	❑ torr
❑ bar	❑ mH_2O [1]	❑ inHg [2]	❑ hPa	❑ g/cm^2
❑ psi	❑ ftH_2O [1]	❑ gf/cm^2	❑ kPa	❑ kg/cm^2
	❑ inH_2O [1]	❑ kgf/cm^2	❑ MPa	❑ lb/ft^2
				❑ atm

1) The conversion factor for the pressure unit is based on a reference temperature of 4 °C (39.2 °F).
2) The conversion factor of the pressure unit refers to a reference temperature of 0 °C (32 °F).

Calibration range / Output

Lower range value (LRV): _____ [pressure unit]
Upper range value (URV): _____ [pressure unit]

Display

Display of the content of the main line (option depends on sensor and communication variant)

- ❑ Primary value [PV] (default)
- ❑ Primary value [%]
- ❑ Pressure
- ❑ Current [mA] (HART only)
- ❑ Temperature
- ❑ Error number
- ❑ Alternating display

Damping

Damping: _____ sec (Default 2 sec)

Smallest span (factory calibration) → 🗎 13

Level

The following configuration data sheet must be completed and included with the order if the option "F" or "I" has been selected in the Product Configurator, order code for "Calibration; Unit".

Pressure unit					Output unit (scaled unit)				
					Mass	Lengths	Volume	Volume	Percent
❑ mbar	❑ mmH_2O [1]	❑ mmHg [2]	❑ Pascal	❑ torr	❑ kg	❑ m	❑ l	❑ USgal	❑ %
❑ bar	❑ mH_2O [1]	❑ inHg [2]	❑ hPa	❑ g/cm^2	❑ t	❑ dm	❑ hl	❑ impgal	
❑ psi	❑ ftH_2O [1]	❑ gf/cm^2	❑ kPa	❑ kg/cm^2	❑ lb	❑ cm	❑ m^3	❑ USbblPE TR	
	❑ inH_2O [1]	❑ kgf/cm^2	❑ MPa	❑ lb/ft^2		❑ mm	❑ ft^3		
				❑ atm		❑ ft			
						❑ inch			

Empty calibration [a]: Low pressure value (empty) _____ [pressure unit]

Full calibration [b]: High pressure value (full) _____ [pressure unit]

Empty calibration [a]: Low measured value (empty) _____ [Scaled unit]

Full calibration [b]: High level value (full) _____ [Scaled unit]

Example

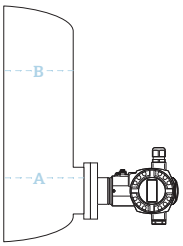

A 0 mbar/0 m
B 300 mbar (4.5 psi) / 3 m (9.8 ft)

1) The conversion factor for the pressure unit is based on a reference temperature of 4 °C (39.2 °F).
2) The conversion factor of the pressure unit refers to a reference temperature of 0 °C (32 °F).

Display

Display of the content of the main line (option depends on sensor and communication variant)

- ❑ Primary value [PV] (default)
- ❑ Primary value [%]
- ❑ Pressure
- ❑ Current [mA] (HART only)
- ❑ Temperature
- ❑ Level before lin.
- ❑ Tank content
- ❑ Error number
- ❑ Alternating display

Damping

Damping: _____ sec (Default 2 sec)

Accessories

HistoROM®/M-DAT	The HistoROM®/M-DAT is a memory module that can be attached to any electronic insert (not for 1-5V DC). Ordering information: Product Configurator, order code for "Additional options 1" or Additional options 2", version "N" or as a separate accessory (part no.: 52027785).
Welding flanges and welding neck	For details, refer to TI00426F/00/EN "Weld-in adapters, process adapters and flanges".
Manifolds	See → 🗎 77. For further details, see SD01553P/00/EN "Mechanical accessories for pressure measuring devices".
Additional mechanical accessories	Oval flange adapters, pressure gauge valves, shutoff valves, siphons, condensate pots, cable shortening kits, adapter test, flushing rings, block&bleed valves, protective roofs. For details see SD01553P/00/EN "Mechanical accessories for pressure measuring devices".

Supplementary documentation

Field of Activities	Pressure measurement, powerful instruments for process pressure, differential pressure, level and flow: FA00004P/00/EN
Technical Information	▪ Deltabar S: TI00382P/00/EN ▪ Deltapilot S: TI00416P/00/EN ▪ EMC test procedures: TI00241F/00/EN ▪ Weld-in adapters, process adapters and flanges: TI00426F/00/EN
Special Documentation	Mechanical accessories for pressure measuring devices: SD01553P/00/EN
Operating Instructions	4 to 20 mA HART: ▪ Cerabar S: BA00271P/00/EN ▪ Description of device functions Cerabar S/Deltabar S/Deltapilot S: BA00274P/00/EN 4 to 20 mA HART with MID parts certificate: ▪ BA00412P/00/EN ▪ Description of Device Functions: BA00413P/00/EN 1-5V DC: Cerabar S PMP71: BA01633P/00/EN PROFIBUS PA: ▪ Cerabar S: BA00295P/00/EN ▪ Description of device functions Cerabar S/Deltabar S/Deltapilot S: BA00296P/00/EN FOUNDATION Fieldbus: ▪ Cerabar S: BA00302P/00/EN ▪ Description of device functions Cerabar S/Deltabar S/Deltapilot S: BA00303P/00/EN
Brief Operating Instructions	▪ 4 to 20 mA HART, Cerabar S: KA01019P/00/EN ▪ 1-5V DC, Cerabar S PMP71: KA01258P/00/EN ▪ PROFIBUS PA, Cerabar S: KA01022P/00/EN ▪ FOUNDATION Fieldbus, Cerabar S: KA01025P/00/EN
Functional safety manual (SIL)	Cerabar S (4 to 20 mA): SD00190P/00/EN
Overfill protection	WHG: ZE00260P/00/DE
Safety Instructions (XA)	Depending on the approval, the following Safety Instructions (XA) are supplied with the device. They are an integral part of the Operating Instructions.

HART, PROFIBUS PA, FOUNDATION Fieldbus

Directive	Device	Electronics	Documentation	Option [1]
ATEX II 1/2 G Ex ia IIC T6 Ga/Gb	PMC71, PMP71, PMP75	4 to 20 mA HART, PROFIBUS PA, FOUNDATION Fieldbus	XA00244P	1
ATEX II 1/2 D Ex ta/tb IIIC Da/Db	PMP71, PMP75	4 to 20 mA HART, PROFIBUS PA, FOUNDATION Fieldbus	▪ XA00246P ▪ XA00289P	2
ATEX II 1/2D Ex ia IIIC Da/Db	PMC71	4 to 20 mA HART, PROFIBUS PA, FOUNDATION Fieldbus	▪ XA00247P ▪ XA00290P	2
ATEX II 1/3D Ex ta/tc IIIC Da/Dc	PMP71, PMP75	4 to 20 mA HART, PROFIBUS PA, FOUNDATION Fieldbus	▪ XA00248P ▪ XA00291P	4
ATEX II 2G Ex d IIC T6 Gb	PMP71, PMP75	4 to 20 mA HART, PROFIBUS PA, FOUNDATION Fieldbus	XA00249P	5
ATEX II 2G Ex d ia IIC T6 Gb	PMC71	4 to 20 mA HART, PROFIBUS PA, FOUNDATION Fieldbus	XA00250P	5
ATEX II 1/2G Ex ia IIC T6, WHG (German Water Resources Act)	PMC71, PMP71, PMP75	4 to 20 mA HART, PROFIBUS PA, FOUNDATION Fieldbus	XA00244P	6

Directive	Device	Electronics	Documentation	Option [1]
ATEX II 3 G Ex nA II T6	PMC71, PMP71, PMP75	4 to 20 mA HART, PROFIBUS PA, FOUNDATION Fieldbus	XA00251P	7
ATEX II 1/2G Ex ia IIC T6 Ga/Gb + ATEX II 1/2D Ex ia IIIC Da/Db	PMC71, PMP71, PMP75	4 to 20 mA HART, PROFIBUS PA, FOUNDATION Fieldbus	XA00253P	3
ATEX II 1G Ex ia IIC Ga + II 1D Ex ia IIIC Da	PMC71, PMP71, PMP75	4 to 20 mA HART, PROFIBUS PA, FOUNDATION Fieldbus	XA00276P	8
ATEX II 1/2G Ex ia IIC T6 + II 2G Ex d IIC T6	PMP71, PMP75	4 to 20 mA HART, PROFIBUS PA, FOUNDATION Fieldbus	XA00252P	B
ATEX II Ex ia + FM IS + CSA IS ATEX II 1/2G Ex ia IIC T6 + FM/CSA IS Cl.I,II,III Div.1 Gr.A-G, FM/CSA: Zone 0,1,2	PMC71	▪ 4 to 20 mA HART, PROFIBUS PA, FOUNDATION Fieldbus ▪ HART ▪ PROFIBUS PA, FOUNDATION Fieldbus	▪ XA00244P ▪ XA00593P + XA01059P ▪ XA00596P + XA01060P	E
ATEX II Ex ia / Ex d + FM/CSA IS + XP ATEX II 1/2G Ex ia IIC T6+ ATEX II 2G Ex d IIC T6+ FM/CSA IS + XP Cl.I.II Div.1 Gr.A-G/B-G FM: Zone 1.2/CSA: Zone 1,2	PMP71, PMP75	▪ 4 to 20 mA HART, PROFIBUS PA, FOUNDATION Fieldbus ▪ HART ▪ PROFIBUS PA, FOUNDATION Fieldbus	▪ XA00252P ▪ XA00592P + XA01197P ▪ XA00590P + XA01198P	F

1) Product Configurator, order code for "Approval"

Directive	Device	Electronics	Documentation	Option [1]
IECEx Ex ia IIC T6 Ga/Gb	PMC71, PMP71, PMP75	4 to 20 mA HART	XB00005P	I
IEC Ex d ia IIC T6 Gb	PMC71	4 to 20 mA HART, PROFIBUS PA, FOUNDATION Fieldbus	XA00511P	B
IEC Ex d IIC T6 Gb	PMP71, PMP75	4 to 20 mA HART, PROFIBUS PA, FOUNDATION Fieldbus	XA00510P	M

1) Product Configurator, order code for "Approval"

1-5V DC

Directive	Device	Electronics	Documentation	Option [1]
CSA C/US XP Cl.I Div.1 Gr.B-D, Ex d, Zone 1,2	PMP71	1-5V DC	XA00599P	V

1) Product Configurator, order code for "Approval"

Directive	Device	Electronics	Documentation	Option [1]
NEPSI Ex ia IIC T6	PMC71, PMP71, PMP75	4 to 20 mA HART, PROFIBUS PA, FOUNDATION Fieldbus	XA00549P	H
NEPSI Ex d IIC T6	PMP71, PMP75	4 to 20 mA HART, PROFIBUS PA, FOUNDATION Fieldbus	XA00551P	G
NEPSI Ex d ia IIC T6	PMC71	4 to 20 mA HART, PROFIBUS PA, FOUNDATION Fieldbus	XA00551P	G

1) Product Configurator, order code for "Approval"

Directive	Device	Electronics	Documentation	Option [1]
TIIS Ex d [ia] IIC T6	PMC71	4 to 20 mA HART	TC17436	L
TIIS Ex d [ia] IIC T4	PMC71	4 to 20 mA HART	TC17398, TC17399	M
TIIS Ex d IIC T6	PMP71 (700 bar version)	4 to 20 mA HART	TC17445	L
TIIS Ex d IIC T6	PMP71, PMP75	4 to 20 mA HART	TC17446	L

1) Product Configurator, order code for "Approval"

Directive	Device	Electronics	Documentation	Option [1]
INMETRO Ex ia IIC T6 Ga/Gb	PMC71, PMP71, PMP75	4 to 20 mA HART, PROFIBUS PA, FOUNDATION Fieldbus	XA01315P	J
INMETRO Ex d IIC T6 Gb	PMP71, PMP75	4 to 20 mA HART, PROFIBUS PA, FOUNDATION Fieldbus	XA01279P	O
INMETRO Ex ta IIIC Da/Db	PMP71, PMP75	4 to 20 mA HART, PROFIBUS PA, FOUNDATION Fieldbus	XA01313P	Z
INMETRO Ex d ia IIC T6 Gb	PMC71	4 to 20 mA HART, PROFIBUS PA, FOUNDATION Fieldbus	XA01280P	P
INMETRO Ex ia IIIC Da/Db	PMC71	4 to 20 mA HART, PROFIBUS PA, FOUNDATION Fieldbus	XA01314P	Z

1) Product Configurator, order code for "Approval"

Installation/Control Drawings

Directive	Device	Electronics	Documentation	Option [1]
FM IS Class I, II, III, Division 1, Groups A – G; NI, Class I Division 2, Groups A – D; AEx ia	PMC71, PMP71, PMP75	▪ 4 to 20 mA HART ▪ PROFIBUS PA, FOUNDATION Fieldbus	▪ XA01059P ▪ XA01060P	S
CSA IS Class I, II, III, Division 1, Groups A – G; Class I Division 2, Groups A – G	PMC71, PMP71, PMP75	▪ 4 to 20 mA HART ▪ PROFIBUS PA, FOUNDATION Fieldbus	▪ XA00593P ▪ XA00596P	U
FM IS + XP Class I, Division 1, Groups A – D	PMP71, PMP75	▪ 4 to 20 mA HART ▪ PROFIBUS PA, FOUNDATION Fieldbus	▪ XA01197P ▪ XA01198P	C
CSA IS + XP Class I Division 1, Groups A – D	PMP71, PMP75	▪ 4 to 20 mA HART ▪ PROFIBUS PA, FOUNDATION Fieldbus	▪ XA00592P ▪ XA00590P	D
FM/CSA IS + XP Class I Division 1, Groups A – D	PMP71, PMP75	▪ 4 to 20 mA HART ▪ PROFIBUS PA, FOUNDATION Fieldbus	▪ XA00592P + XA01197P ▪ XA01198P + XA00590P	E
FM NI Cl.I Div.2 Groups A - D, Zone 2	PMC71, PMP71, PMP75	4 to 20 mA HART, PROFIBUS PA, FOUNDATION Fieldbus	XA01063P	R
FM XP Cl.I Div.1 Groups A - D, AEx d, Zone 1,2	PMC71, PMP71, PMP75	4 to 20 mA HART, PROFIBUS PA, FOUNDATION Fieldbus	XA01070P	T
FM DIP Cl.II,III Div.1 Gr.E-G, Zone 21,22	PMP71, PMP75	4 to 20 mA HART, PROFIBUS PA, FOUNDATION Fieldbus	FM3017778	Q
CSA C/US XP Cl.I Div.1 Gr.B-D, Ex d, Zone 1,2	PMC71, PMP71, PMP75	4 to 20 mA HART, PROFIBUS PA, FOUNDATION Fieldbus	ZD00230P + XA00599P	V
CSA C/US General Purpose	PMD75, FMD77, FMD78	4 to 20 mA HART, PROFIBUS PA, FOUNDATION Fieldbus	-	X

1) Product Configurator, order code for "Approval"

71376664

www.addresses.endress.com

Endress+Hauser
People for Process Automation

A.10.2 Functional desription

BA00274P/00/EN/18.16
71336359

valid from Software version:
02.30.zz

Products Solutions Services

Description of Instrument Functions
Cerabar S PMC71, PMP71, PMP75
Deltabar S FMD77 / 78, PMD75
Deltapilot S FMB70

Process pressure / Differential pressure, Flow / Hydrostatic

HART COMMUNICATION PROTOCOL

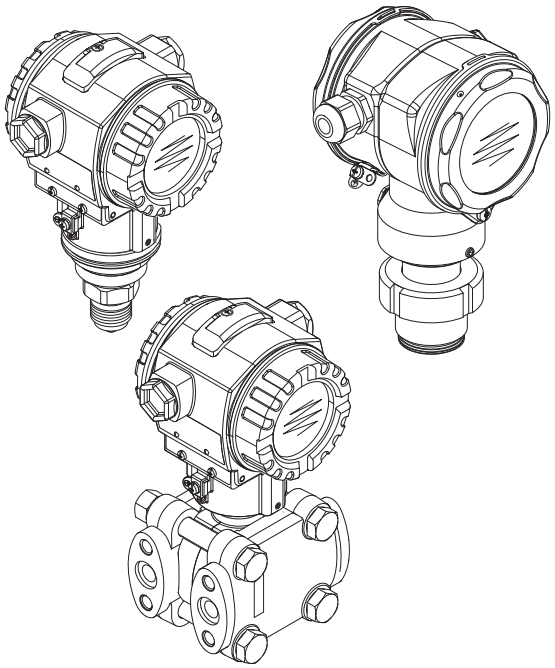

Endress+Hauser
People for Process Automation

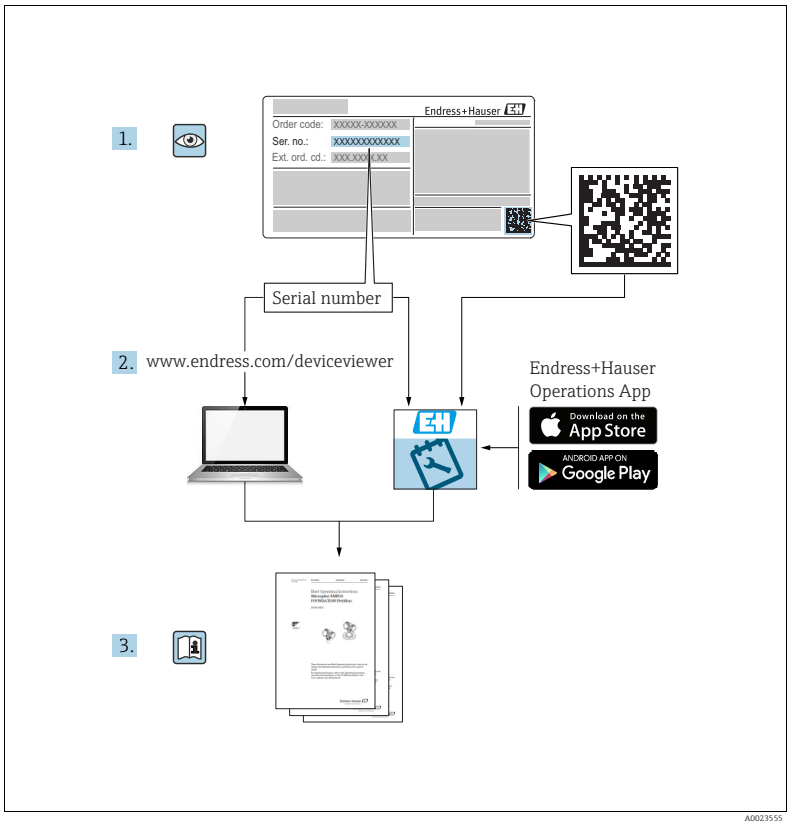

A0023555

Make sure the document is stored in a safe place such that it is always available when working on or with the device.
To avoid danger to individuals or the facility, read the "Basic safety instructions" section carefully, as well as all other safety instructions in the document that are specific to working procedures.
The manufacturer reserves the right to modify technical data without prior notice. Your Endress+Hauser Sales Center will supply you with current information and updates to these Instructions.

Table of contents

1 Document information 4

1.1 Symbols used 4

2 Basic safety instructions 4

3 Notes on use 4

4 Pressure measurement 5

4.1 Calibration with reference pressure 5
4.2 Calibration without reference pressure 6

5 Level measurement 8

5.1 Overview of level measurement 8
5.2 "Level Easy Pressure" level selection 9
5.3 "Level Easy Height" level selection 13
5.4 "Level Standard" level selection, "Linear" level type 17
5.5 "Level Standard" level selection, "Pressure Linearized" level type 21
5.6 "Level Standard" level selection, "Height Linearized" level type 26

6 Flow measurement 33

6.1 Calibration 33
6.2 Totalizers 35

7 On-site display operating menu 36

8 FieldCare operating menu 43

9 Description of parameters 62

10 Troubleshooting 131

10.1 Messages 131
10.2 Response of outputs to errors 140
10.3 Confirming messages 141

Index 142

1 Document information

1.1 Symbols used

1.1.1 Safety symbols

Symbol	Meaning
DANGER A0011189-DE	**DANGER!** This symbol alerts you to a dangerous situation. Failure to avoid this situation will result in seriousor fatal injury.
WARNING A0011190-DE	**WARNING!** This symbol alerts you to a dangerous situation. Failure to avoid this situation can result in seriousor fatal injury.
CAUTION A0011191-DE	**CAUTION!** This symbol alerts you to a dangerous situation. Failure to avoid this situation can result in minoror medium injury.
NOTICE A0011192-DE	**NOTICE!** This symbol contains information on procedures and other facts which do not result in personalinjury.

1.1.2 Symbols for certain types of information

Symbol	Meaning
A0011193	**Tip** Indicates additional information.

2 Basic safety instructions

Siehe Betriebsanleitung:
Deltabar S BA00270P
Cerabar S BA00271P
Deltapilot S BA00332P

3 Notes on use

Typical examples of configuration	see chapter 4 to 6
Operating menu of the on-site display	see Chapter 7
FieldCare operating menu	see Chapter 8
Parameter description	see Chapter 9
Finding parameter description using parameter names (index)	see Page 142

4 Pressure measurement

4.1 Calibration with reference pressure

Example:
In this example, a device with a 500 mbar (7.5 psi) sensor is configured for the 0...+300 mbar (4.5 psi)measuring range, i.e. 0 mbar and 300 mbar (4.5 psi) are assigned to the 4 mA value and 20 mA value respectively.

Prerequisite:
- The pressure values 0 mbar and 300 mbar (4.5 psi) can be specified. The device is already installed, for example.
- See also Operating Instructions Deltabar S (BA00270P), Section "Differential pressure measurement", Cerabar S (BA00271P), Section "Pressure measurement" or Deltapilot S (BA00332P), Section "Pressure measurement".
- For a description of the parameters mentioned, see
  - Page 62, Table 2: MEASURING MODE
  - Page 68, Table 6: POSITION ADJUSTMENT
  - Page 69, Table 7: BASIC SETUP.
- For a description of further relevant parameters, see
  - Page 100, Table 15: EXTENDED SETUP
  - Page 120, Table 25: PROCESS VALUES.

⚠ WARNING
Changing the measuring mode can affect the adjustment data!
This situation can result in product overflow.
▶ Check calibration data when the measuring mode is changed.

	Description
1	Deltabar S: before configuring the device for your application, the pressure piping must be cleaned and filled with fluid. See Operating Instructions BA00270P.
2	Carry out position adjustment if necessary. See Page 68, Table 6: POSITION ADJUSTMENT.
3	If necessary, select the "Pressure" measuring mode via the MEASURING MODE parameter. On-site display: Menu path: GROUP SELECTION → MEASURING MODE Digital communication: See Page 62
4	On-site display: Select BASIC SETUP function group. Menu path: GROUP SELECTION → OPERATING MENU → SETTINGS → BASIC SETUP
5	Select a pressure unit via the PRESS. ENG. UNIT parameter, here mbar for example.
6	The pressure for the lower range value (4 mA value) is present at the device, here 0 mbar for example.
	Select GET LRV parameter.
	Confirm value present. The pressure value present is assigned to the lower current value (4 mA).
7	The pressure for the upper range value (20 mA value) is present at the device, here 300 mbar (4.5 psi) for example.
	Select GET URV parameter.
	Confirm value present. The pressure value present is assigned to the upper current value (20 mA).
8	Result: The measuring range is set for 0...+300 mbar (4.5 psi).

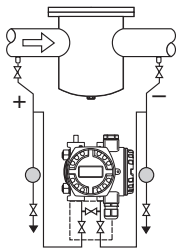

P01-PMD75xxx-19-xx-xx-xx-000

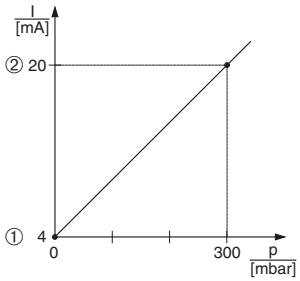

P01-xxxxxxxx-05-xx-xx-xx-010

Fig. 1: Calibration with reference pressure

1 See table, step 6.
2 See table, step 7.

You can also specify a customer-specific unit. See parameter description for PRESS. ENG. UNIT (→ Page 69).

4.2 Calibration without reference pressure

Example:
In this example, a device with a 400 mbar (6 psi) sensor is configured for the 0...+300 mbar (4.5 psi) measuring range, i.e. 0 mbar and 300 mbar (4.5 psi) are assigned to the 4 mA value and 20 mA value respectively.

Prerequisite:
- This is a theoretical calibration, i.e. the pressure values for the lower range and upper range value are known.
- See also Operating Instructions Deltabar S (BA00270P), Section "Differential pressure measurement", Cerabar S (BA00271P), Section "Pressure measurement" or Deltapilot S (BA00332P), Section "Pressure measurement".
- Due to the orientation of the device, there may be a shift in the measured value, i.e. when the container is empty, the MEASURED VALUE parameter does not display zero. → To perform a position adjustment see also Page 68, Table 6: Position adjustment.

- For a description of the parameters mentioned, see
  - Page 62, Table 2: MEASURING MODE
  - Page 68, Table 6: POSITION ADJUSTMENT
  - Page 69, Table 7: BASIC SETUP.
- For a description of further relevant parameters, see
  - Page 100, Table 15: EXTENDED SETUP
  - Page 120, Table 27: PROCESS VALUES.

⚠ WARNING

Changing the measuring mode can affect the adjustment data!

This situation can result in product overflow.

▶ Check calibration data when the measuring mode is changed.

	Description
1	If necessary, select the "Pressure" measuring mode via the MEASURING MODE parameter. On-site display: Menu path: GROUP SELECTION → MEASURING MODE Digital communication: See Page 62
2	On-site display: Select BASIC SETUP function group. Menu path: GROUP SELECTION → OPERATING MENU → SETTINGS → BASIC SETUP
3	Select a pressure unit via the PRESS. ENG. UNIT parameter, here mbar for example.
4	Select SET LRV parameter.
	Enter value, here 0 mbar, for the SET LRV parameter and confirm. This pressure value is assigned to the lower current value (4 mA).
5	Select SET URV parameter.
	Enter value, here 300 mbar (4.5 psi), for the SET URV parameter and confirm. This pressure value is assigned to the upper current value (20 mA).
6	Result: The measuring range is set for 0...+300 mbar (4.5 psi).

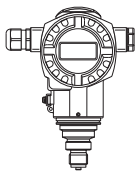

P01-PMP71xxx-19-xx-xx-xx-000

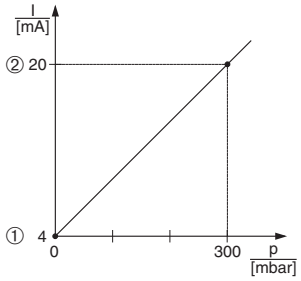

P01-xxxxxxxx-05-xx-xx-xx-010

Fig. 2: Calibration without reference pressure

1 See table, step 4.
2 See table, step 5.

- You can also perform calibration without reference pressure by means of the QUICK SETUP menu. → See Page 64 ff, Table 3: QUICK SETUP menu.
- You can also specify a customer-specific unit. See parameter description for PRESS. ENG. UNIT (→ Page 69).

5 Level measurement

5.1 Overview of level measurement

Measuring task	LEVEL SELECTION/ LEVEL MODE	Measured variable options	Description	Comment	Measured value display
The measured variable is in direct proportion to the measured pressure. Calibration is performed by entering two pressure-level value pairs.	LEVEL SELECTION: Level Easy Pressure	Via OUTPUT UNIT parameter: %, level, volume or mass units.	– Calibration with reference pressure – wet calibration, see Page 9, Section 5.2.1 – Calibration without reference pressure – dry calibration, see Page 11, Section 5.2.2	– Incorrect entries are possible – SIL mode possible – Customised units are not possible	The measured value display and the LEVEL BEFORE LIN parameter show the measured value.
The measured variable is in direct proportion to the measured pressure. Calibration is performed by entering the density and two height-level value pairs.	LEVEL SELECTION: Level Easy Height	Via OUTPUT UNIT parameter: %, level, volume or mass units.	– Calibration with reference pressure – wet calibration, see Page 13, Section 5.3.1 – Calibration without reference pressure – dry calibration, see Page 15, Section 5.3.2	– Incorrect entries are possible – SIL mode not possible – Customised units are not possible	The measured value display and the LEVEL BEFORE LIN parameter show the measured value.
The measured variable is in direct proportion to the measured pressure.	LEVEL SELECTION: Level standard/ LEVEL MODE: Linear	Via LIN. MEASURAND parameter: – % (Level) – Level – Volume – Mass	– Calibration with reference pressure – wet calibration, see Page 17, Section 5.4.1 – Calibration without reference pressure – dry calibration, see Page 19, Section 5.4.2	– Incorrect entries are rejected by the device – SIL mode not possible – Customised level, volume and mass units are possible	The measured value display and the LEVEL BEFORE LIN parameter show the measured value.
The measured variable is not in direct proportion to the measured pressure as, for example, with containers with a conical outlet. A linearisation table must be entered for the calibration.	LEVEL SELECTION: Level standard/ LEVEL MODE: Pressure Linearized	Via LINd MEASURAND parameter: – Pressure + % – Pressure + Volume – Pressure + Mass	– Calibration with reference pressure: semiautomatic entry of linearisation table, see Page 21, Section 5.5.1 – Calibration without reference pressure: manual entry of linearisation table, see Page 24, Section 5.5.2	– Incorrect entries are rejected by the device – SIL mode not possible – Customised level, volume and mass units are possible	The measured value display and the TANK CONTENT parameter show the measured value.
– Two measured variables are required or – The container shape is given by value pairs, such as height and volume. The 1st measured variable %-height or height must be in direct proportion to the measured pressure. The 2nd measured variable volume, mass or % must not be in direct proportion to the measured pressure. A linearisation table must be entered for the 2nd measured variable. The 2nd measured variable is assigned to the 1st measured variable by means of this table.	LEVEL SELECTION: Level standard/ LEVEL MODE: Height Linearized	Via COMB. MEASURAND parameter: – Height + Volume – Height + Mass – Height + % – %-Height + Volume – %-Height + Mass – %-Height + %	– Calibration with reference pressure: wet calibration and semiautomatic entry of linearisation table, see Page 26, Section 5.6.1 – Calibration without reference pressure: dry calibration and manual entry of linearisation table, see Page 30, Section 5.6.2	– Incorrect entries are rejected by the device – SIL mode not possible – Customised level, volume and mass units are possible	The measured value display and the TANK CONTENT parameter show the 2nd measured value (volume, mass or %). The LEVEL BEFORE LIN parameter displays the 1st measured value (%-height or height).

5.2 "Level Easy Pressure" level selection

5.2.1 Calibration with reference pressure – wet calibration

Example:
In this example, the level in a tank should be measured in m. The maximum level is 3 m (9.8 ft). The pressure range is set to 0 to 300 mbar (4.5 psi).

Prerequisite:
- The measured variable is in direct proportion to the pressure.
- The tank can be filled or emptied.

- See also Operating Instructions for Deltabar S (BA00270P) or Cerabar S (BA00271P), Section "Level measurement" or Deltapilot S (BA00332P), Section "Level measurement".
- The values entered for EMPTY CALIB./FULL CALIB. and SET LRV/SET URV must have a minimum interval of 1% for the "Level Easy Pressure" level mode. The value will be rejected with a warning message if the values are too close together. Further limit values are not checked; i.e. the values entered must be appropriate for the sensor and the measuring task so that the measuring device can measure correctly.
- For a description of the parameters mentioned, see
  - Page 62, Table 2: MEASURING MODE
  - Page 68, Table 6: POSITION ADJUSTMENT
  - Page 70, Table 8: LEVEL SELECTION "Level Easy Pressure"
- For a description of further relevant parameters, see
  - Page 100, Table 16: EXTENDED SETUP
  - Page 121, Table 28: PROCESS VALUES.

⚠ WARNING
Changing the measuring mode can affect the adjustment data!
This situation can result in product overflow.
▶ Check calibration data when the measuring mode is changed.

	Description
1	Deltabar S: Before you configure the device for your application, the pressure piping must be cleaned and filled with medium. See Operating Instructions BA00270P.
2	Carry out position adjustment if necessary. See Page 68, Table 6: POSITION ADJUSTMENT.
3	If necessary, select the "Level" measuring mode via the MEASURING MODE parameter. On-site display: Menu path: GROUP SELECTION → MEASURING MODE Digital communication: See Page 62
4	If necessary, select "Level Easy Pressure" level mode using the LEVEL SELECTION parameter. On-site display: Menu path: GROUP SELECTION → MEASURING MODE "Level" → LEVEL SELECTION Digital communication: See Page 63

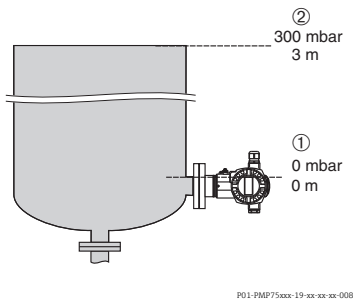

Fig. 3: Calibration with reference pressure – wet calibration

1 See Table, Step 9.
2 See Table, Step 10.

	Description
5	On-site display: Select BASIC SETUP function group. Menu path: GROUP SELECTION → OPERATING MENU → SETTINGS → BASIC SETUP
6	Select a pressure unit via the PRESS. ENG. UNIT parameter, here mbar for example.
7	Select a level unit via the OUTPUT UNIT parameter, here m for example.
8	Select the "Wet" option by means of the CALIBRATION MODE parameter.
9	Hydrostatic pressure for the lower calibration point is present at the device, here 0 mbar for example.
	Select EMPTY CALIB. parameter.
	Enter the level value, here 0 m for example. Confirm the value to assign the pressure value present to the lower level value. To accept the value displayed you must first switch to the Edit mode (see the "Editing values" section) and then press the Ⓔ button to save the value.
10	Hydrostatic pressure for the upper calibration point is present at the device, here 300 mbar (4.5 psi) for example.
	Select FULL CALIB. parameter.
	Enter the level value, here 3 m (9.8 ft) for example. Confirm the value to assign the pressure value present to the upper level value. To accept the value displayed you must first switch to the Edit mode (see the "Editing values" section) and then press the Ⓔ button to save the value.
11	Set the value for the lower current value (4 mA) by means of the SET LRV parameter.
12	Set the value for the upper current value (20 mA) by means of the SET URV parameter.
13	Result: The measuring range is set for 0 to 3 m (9.8 ft).

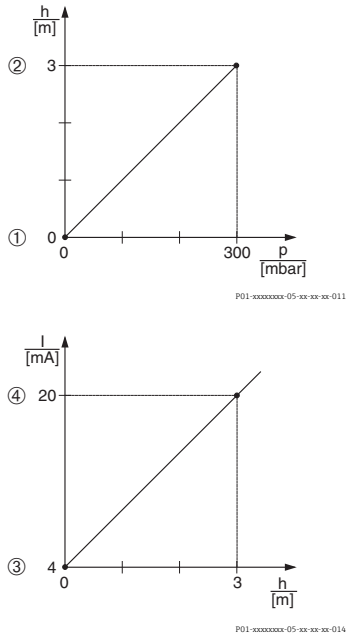

Fig. 4: Calibration with reference pressure – wet calibration

1 See Table, Step 9.
2 See Table, Step 10.
3 See Table, Step 11.
4 See Table, Step 12.

1. You can also perform calibration with reference pressure by means of the QUICK SETUP menu. → See Page 65 ff, Table 4: QUICK SETUP menu.
2. For this level mode, the measured variables %, level, volume and mass are available. → See also parameter description for OUTPUT UNIT, Page 71.
3. For operation using the on-site display, the parameters EMPTY CALIB. (→ Page 72) and FULL CALIB. (→ Page 73) also show the respective pressure present at the device. For operation using Digital communication, the pressure present at the device is displayed in the PROCESS VALUES group (menu path: OPERATING MENU→ PROCESSINFO → PROCESS VALUES).

5.2.2 Calibration without reference pressure – dry calibration

Example:
In this example, the volume in a tank should be measured in litres.The maximum volume of 1000 litres (264 US gal) corresponds to a pressure of 450 mbar (6.75 psi). The minimum volume of 0 litres corresponds to a pressure of 50 mbar (0.75 psi), as the device is mounted below the level lower range value. The device is mounted below the level lower range value.

Prerequisite:
- The measured variable is in direct proportion to the pressure.
- This is a theoretical calibration i.e. the pressure and volume values for the lower and upper calibration point must be known.

- See also Operating Instructions for Deltabar S (BA00270P) or Cerabar S (BA00271P), Section "Level measurement" or Deltapilot S (BA00332P), Section "Level measurement".
- The values entered for EMPTY CALIB./FULL CALIB. and SET LRV/SET URV must have a minimum interval of 1% for the "Level Easy Pressure" level mode. The value will be rejected with a warning message if the values are too close together. Further limit values are not checked; i.e. the values entered must be appropriate for the sensor and the measuring task so that the measuring device can measure correctly.
- Due to the orientation of the device, there may be a shift in the measured value, i.e. when the container is empty, the MEASURED VALUE parameter does not display zero. → To perform a position adjustment see also Page 68, Table 6: Position adjustment.
- For a description of the parameters mentioned, see
  - Page 62, Table 2: MEASURING MODE
  - Page 70, Table 8: LEVEL SELECTION "Level Easy Pressure"
- For a description of further relevant parameters, see
  - Page 100, Table 16: EXTENDED SETUP
  - Page 121, Table 28: PROCESS VALUES.

⚠ WARNING
Changing the measuring mode can affect the adjustment data!
This situation can result in product overflow.
▶ Check calibration data when the measuring mode is changed.

	Description
1	Select the "Level" measuring mode via the MEASURING MODE parameter. On-site display: Menu path: GROUP SELECTION → MEASURING MODE Digital communication: See Page 62
2	If necessary, select "Level Easy Pressure" level mode using the LEVEL SELECTION parameter. On-site display: Menu path: GROUP SELECTION → MEASURING MODE "Level" → LEVEL SELECTION Digital communication: See Page 63
3	On-site display: Select BASIC SETUP function group. Menu path: GROUP SELECTION → OPERATING MENU → SETTINGS → BASIC SETUP

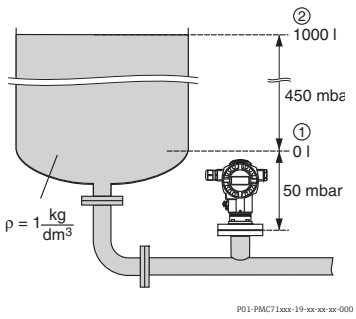

Fig. 5: Calibration without reference pressure – dry calibration

1 See Table, Steps 7 and 8.
2 See Table, Steps 9 and 10.

	Description
4	Select a pressure unit via the PRESS. ENG. UNIT parameter, here mbar for example.
5	Select a volume unit via the OUTPUT UNIT parameter, here l (litres) for example..
6	Select the "Dry" option by means of the CALIBRATION MODE parameter.
7	Enter the volume value for the lower calibration point via the EMPTY CALIB. parameter, here 0 l for example.
8	Enter the pressure value for the lower calibration point via the EMPTY PRESSURE parameter, here 50 mbar (0.75 psi) for example.
9	Enter the volume value for the upper calibration point via the FULL CALIB. parameter, here 1000 l (264 gal) for example.
10	Enter the pressure value for the upper calibration point via the FULL PRESSURE parameter, here 450 mbar (6.75 psi) for example.
11	Set the value for the lower current value (4 mA) by means of the SET LRV parameter.
12	Set the value for the upper current value (20 mA) by means of the SET URV parameter.
13	Result: The measuring range is set for 0 to 1000 l (264 gal).

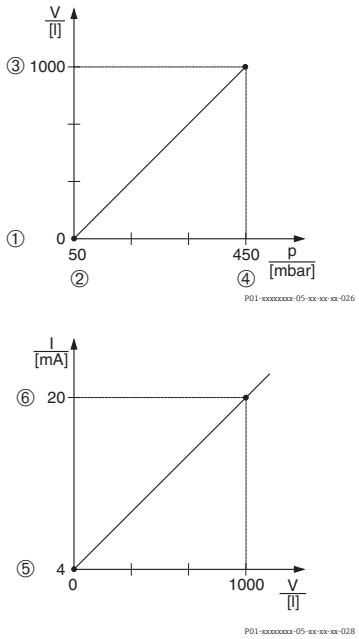

Fig. 6: Calibration with reference pressure – wet calibration

1 See Table, Step 7.
2 See Table, Step 8.
3 See Table, Step 9.
4 See Table, Step 10.
5 See Table, Step 11.
6 See Table, Step 12.

For this level mode, the measured variables %, level, volume and mass are available. → See also parameter description for OUTPUT UNIT, Page 71.

5.3 "Level Easy Height" level selection

5.3.1 Calibration with reference pressure – wet calibration

Example:
In this example, the volume in a tank should be measured in litres. The maximum volume of 1000 litres (264 US gal) corresponds to a level of 4.5 m (15 ft). The minimum volume of 0 litres corresponds to a level of 0.5 m (1.6 ft), as the device is mounted below the level lower range value. The density of the medium is 1 kg/dm^3.

Prerequisite:
- The measured variable is in direct proportion to the pressure.
- The tank can be filled or emptied.

- See also Operating Instructions for Deltabar S (BA00270P) or Cerabar S (BA00271P), Section "Level measurement" or Deltapilot S (BA00332P), Section "Level measurement".
- The values entered for EMPTY CALIB./FULL CALIB., EMPTY PRESSURE/FULL PRESSURE, EMPTY HEIGHT/FULL HEIGHT and SET LRV/SET URV must have a minimum interval of 1% for the "Level Easy Height" level mode. The value will be rejected with a warning message if the values are too close together. Further limit values are not checked; i.e. the values entered must be appropriate for the sensor and the measuring task so that the measuring device can measure correctly.
- For a description of the parameters mentioned, see
  - Page 62, Table 2: MEASURING MODE
  - Page 68, Table 6: POSITION ADJUSTMENT
  - Page 73, Table 9: LEVEL SELECTION "Level Easy Height"
- For a description of further relevant parameters, see
  - Page 100, Table 16: EXTENDED SETUP
  - Page 121, Table 28: PROCESS VALUES.

⚠ WARNING
Changing the measuring mode can affect the adjustment data!
This situation can result in product overflow.
▶ Check calibration data when the measuring mode is changed.

	Description
1	Deltabar S: Before you configure the device for your application, the pressure piping must be cleaned and filled with medium. See Operating Instructions BA00270P.
2	Carry out position adjustment if necessary. See Page 68, Table 6: POSITION ADJUSTMENT.
3	Select the "Level" measuring mode via the MEASURING MODE parameter. On-site display: Menu path: GROUP SELECTION → MEASURING MODE Digital communication: See Page 62
4	If necessary, select the "Level Easy Height" level mode using the LEVEL SELECTION parameter. On-site display: Menu path: GROUP SELECTION → MEASURING MODE "Level" → LEVEL SELECTION Digital communication: See Page 63
5	On-site display: Select BASIC SETUP function group. Menu path: GROUP SELECTION → OPERATING MENU → SETTINGS → BASIC SETUP

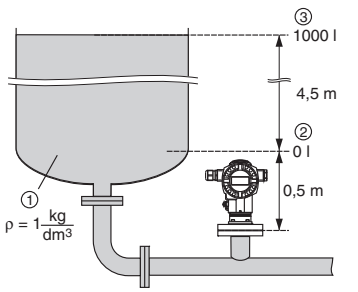

Fig. 7: Calibration with reference pressure – wet calibration

1 See Table, Steps 10 and 11.
2 See Table, Step 12.
3 See Table, Step 13.

	Description
6	Select a pressure unit via the PRESS. ENG. UNIT parameter, here mbar for example.
7	Select a volume unit via the OUTPUT UNIT parameter, here l (litres) for example..
8	Select a height unit via the HEIGHT UNIT parameter, here m for example.
9	Select the "Wet" option via the CALIBRATION MODE parameter.
10	Select a density unit via the DENSITY UNIT parameter, here kg/dm³ for example.
11	Enter the density of the fluid using the ADJUST DENSITY parameter, here kg/dm³ for example.
12	Enter the volume value for the lower calibration point via the EMPTY CALIB. parameter, here 0 l for example. (The currently measured hydrostatic pressure is displayed as height, here 0.5 m (1.6 ft) for example.) To accept the value displayed you must first switch to the Edit mode (see the "Editing values" section) and then press the Ⓔ button to save the value.
13	Enter the volume value for the upper calibration point via the FULL CALIB. parameter, here 1000 l (264 US gal) for example. (The currently measured hydrostatic pressure is displayed as height, here 4.5 m (15 ft) for example.) To accept the value displayed you must first switch to the Edit mode (see the "Editing values" section) and then press the Ⓔ button to save the value.
14	Set the value for the lower current value (4 mA) by means of the SET LRV parameter.
15	Set the value for the upper current value (20 mA) by means of the SET URV parameter.
16	Result: The measuring range is set for 0 to 1000 l (264 US gal).

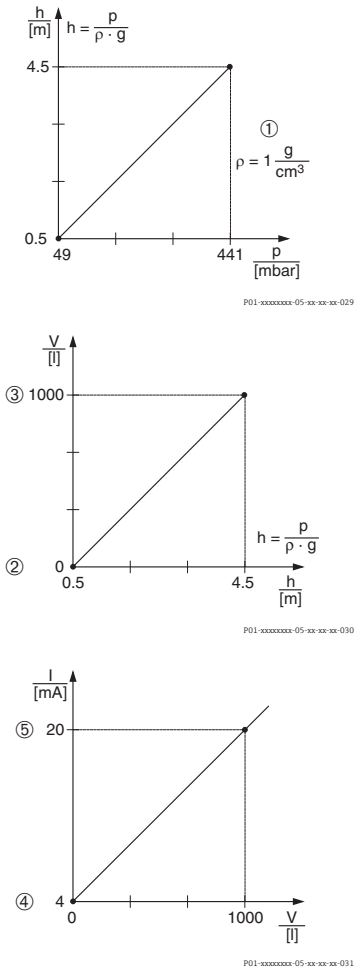

Fig. 8: Calibration with reference pressure – wet calibration

1 See Table, Steps 10 and 11.
2 See Table, Step 12.
3 See Table, Step 13.
4 See Table, Step 14.
5 See Table, Step 15.

For this level mode, the measured variables %, level, volume and mass are available. → See also parameter description for OUTPUT UNIT, Page 75.

5.3.2 Calibration without reference pressure – dry calibration

Example:
In this example, the volume in a tank should be measured in litres. The maximum volume is 1000 l (264 US gal), and the maximum height is 4.5 m (15 ft). The minimum volume of 0 litres corresponds to a level of 0.5 m (1.6 ft), as the device is mounted below the level lower range value. The density of the fluid is 1 kg/dm^3.

Prerequisite:
- The measured variable is in direct proportion to the pressure.
- This is a theoretical calibration i.e. the height and volume values for the lower and upper calibration point must be known.

- See also Operating Instructions for Deltabar S (BA00270P) or Cerabar S (BA00271P), Section "Level measurement" or Deltapilot S (BA00332P), Section "Level measurement".
- The values entered for EMPTY CALIB./FULL CALIB., EMPTY PRESSURE/FULL PRESSURE, EMPTY HEIGHT/FULL HEIGHT and SET LRV/SET URV must have a minimum interval of 1% for the "Level Easy Height" level mode. The value will be rejected with a warning message if the values are too close together. Further limit values are not checked; i.e. the values entered must be appropriate for the sensor and the measuring task so that the measuring device can measure correctly.
- Due to the orientation of the device, there may be a shift in the measured value, i.e. when the container is empty, the MEASURED VALUE parameter does not display zero. → To perform a position adjustment see also Page , Table 6: Position adjustment.
- For a description of the parameters mentioned, see
  – Page 62, Table 2: MEASURING MODE
  – Page 73, Table 9: LEVEL SELECTION "Level Easy Height"
- For a description of further relevant parameters, see
  – Page 100, Table 16: EXTENDED SETUP
  – Page 121, Table 28: PROCESS VALUES.

⚠ WARNING
Changing the measuring mode can affect the adjustment data!
This situation can result in product overflow.
▶ Check calibration data when the measuring mode is changed.

	Description
1	Select the "Level" measuring mode via the MEASURING MODE parameter. On-site display: Menu path: GROUP SELECTION → MEASURING MODE Digital communication: See Page 62
2	If necessary, select "Level Easy Height" level mode using the LEVEL SELECTION parameter. On-site display: Menu path: GROUP SELECTION → MEASURING MODE "Level" → LEVEL SELECTION Digital communication: See Page 63
3	On-site display: Select BASIC SETUP function group. Menu path: GROUP SELECTION → OPERATING MENU → SETTINGS → BASIC SETUP

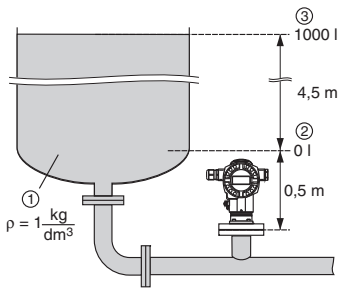

Fig. 9: Calibration without reference pressure – dry calibration

1 See Table, Steps 8 and 9.
2 See Table, Steps 10 and 11.
3 See Table, Steps 12 and 13.

	Description
4	Select a pressure unit via the PRESS. ENG. UNIT parameter, here mbar for example.
5	Select a volume unit via the OUTPUT UNIT parameter, here l (litres) for example.
6	Select a height unit via the HEIGHT UNIT parameter, here m for example.
7	Select the "Dry" option via the CALIBRATION MODE parameter.
8	Select a density unit via the DENSITY UNIT parameter, here kg/dm^3 for example.
9	Enter the density of the fluid using the ADJUST DENSITY parameter, here kg/dm^3 for example.
10	Enter the volume value for the lower calibration point via the EMPTY CALIB. parameter, here 0 l for example.
11	Enter the height value for the lower calibration point via the EMPTY HEIGHT parameter, here 0.5 m (1.6 ft) for example.
12	Enter the volume value for the upper calibration point via the FULL CALIB. parameter, here 1000 l (litres) (264 US gal) for example.
13	Enter the height value for the upper calibration point via the FULL HEIGHT parameter, here 4.5 m (15 ft) for example.
14	Set the value for the lower current value (4 mA) by means of the SET LRV parameter.
15	Set the value for the upper current value (20 mA) by means of the SET URV parameter.
16	Result: The measuring range is set for 0 to 1000 l (litres) (264 US gal).

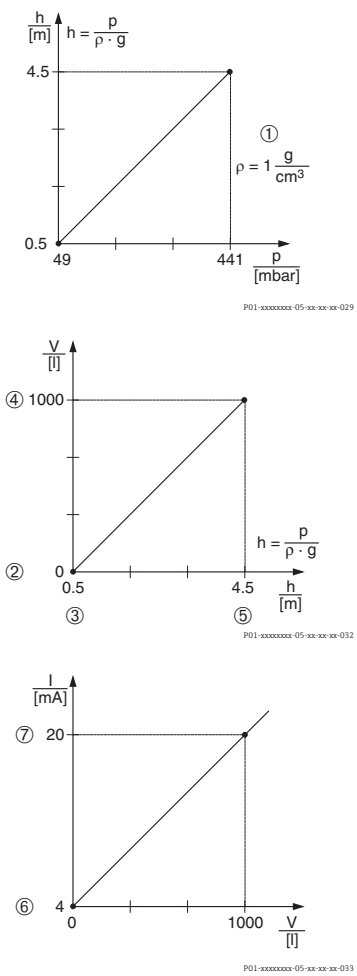

Fig. 10: Calibration with reference pressure – wet calibration

1 See Table, Steps 8 and 9.
2 See Table, Step 10.
3 See Table, Step 11.
4 See Table, Step 12.
5 See Table, Step 13.
6 See Table, Step 14.
7 See Table, Step 15.

For this level mode, the measured variables %, level, volume and mass are available. → See also parameter description for OUTPUT UNIT, Page 75.

5.4 "Level Standard" level selection, "Linear" level type

5.4.1 Calibration with reference pressure – wet calibration

Example:
In this example, the level in a tank should be measured in m. The maximum level is 3 m (9.8 ft). The pressure range is set to 0 to 300 mbar (4.5 psi).

Prerequisite:
- The measured variable is in direct proportion to the pressure.
- The tank can be filled or emptied.
- See also Operating Instructions for Deltabar S (BA00270P) or Cerabar S (BA00271P), Section "Level measurement" or Deltapilot S (BA00332P), Section "Level measurement".
- For a description of the parameters mentioned, see
  - Page 62, Table 2: MEASURING MODE
  - Page 68, Table 6: POSITION ADJUSTMENT
  - Page 77, Table 10: BASIC SETUP
  - Page 79, Table 11: BASIC SETUP – "Linear" level type.
- For a description of further relevant parameters, see
  - Page 100, Table 16: EXTENDED SETUP
  - Page 121, Table 28: PROCESS VALUES.

⚠ WARNING
Changing the measuring mode can affect the adjustment data!
This situation can result in product overflow.
▶ Check calibration data when the measuring mode is changed.

	Description
1	Deltabar S: before configuring the device for your application, the pressure piping must be cleaned and the device filled with fluid. See Operating Instructions BA00270P.
2	Carry out position adjustment if necessary. See Page 68, Table 6: POSITION ADJUSTMENT.
3	If necessary, select the "Level" measuring mode via the MEASURING MODE parameter. On-site display: Menu path: GROUP SELECTION → MEASURING MODE Digital communication: See Page 62
4	If necessary, select "Level Standard" level mode using the LEVEL SELECTION parameter. On-site display: Menu path: GROUP SELECTION → MEASURING MODE "Level" → LEVEL SELECTION Digital communication: See Page 63

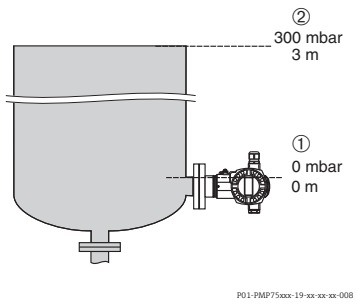

Fig. 11: Calibration with reference pressure – wet calibration

1 See table, step 11.
2 See table, step 12.

	Description
5	On-site display: Select BASIC SETUP function group. Menu path: GROUP SELECTION → OPERATING MENU → SETTINGS → BASIC SETUP
6	Select a pressure unit via the PRESS. ENG. UNIT parameter, here mbar for example.
7	Select the "Linear" option by means of the LEVEL MODE parameter.
8	Select the "Level" option by means of the LIN. MEASURAND parameter.
9	Select a level unit via the HEIGHT UNIT parameter, here m for example.
10	Select the "Wet" option by means of the CALIBRATION MODE parameter.
11	The pressure for the lower calibration point is present at the device, here 0 mbar for example.
	Select EMPTY CALIB. parameter.
	Enter the level value, here 0 m for example. Confirm the value to assign the pressure value present to the lower level value.
12	The pressure for the upper calibration point is present at the device, here 450 mbar (6.75 psi) for example.
	Select FULL CALIB. parameter.
	Enter the level value, here 3 m (9.8 ft) for example. Confirm the value to assign the pressure value present to the upper level value.
13	Set the value for the lower current value (4 mA) by means of the SET LRV parameter.
14	Set the value for the upper current value (20 mA) by means of the SET URV parameter.
15	Result: The measuring range is set for 0...3 m (9.8 ft).

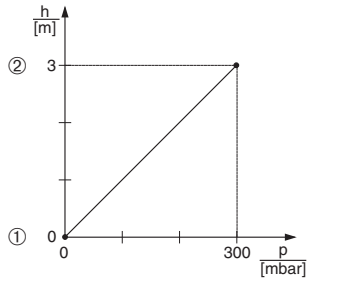

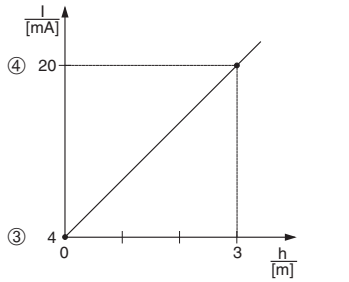

Fig. 12: Calibration with reference pressure – wet calibration

1 See table, step 11.
2 See table, step 12.
3 See table, step 13.
4 See table, step 14.

1. You can also perform calibration with reference pressure by means of the QUICK SETUP menu. → See Page 65 ff, Table 4: QUICK SETUP menu.
2. You can also specify customer-specific units. See parameter description for PRESS. ENG. UNIT (→ Page 77), HEIGHT UNIT (→ Page 79), UNIT VOLUME (→ Page 80) and MASS UNIT (→ Page 81).
3. For this level type, the measured variables %, level, volume and mass are available. → See Page 79 ff.
4. The EMPTY PRESSURE (→ Page 83) and FULL PRESSURE (→ Page 83) parameters display the pressure values belonging to the EMPTY CALIB. and FULL CALIB. parameters.

5.4.2 Calibration without reference pressure – dry calibration

Example:
In this example, the volume in a tank should be measured in m^3. The maximum volume is 5 m^3 and the maximum height 4 m (13 ft). The density of the fluid is 1 kg/dm^3. The device is mounted below the level lower range value.

Prerequisite:
- The measured variable is in direct proportion to the pressure.
- This is a theoretical calibration, i.e. the tank volume, tank height and density of the fluid are known.
- See also Operating Instructions for Deltabar S (BA00270P) or Cerabar S (BA00271P), Section "Level measurement" or Deltapilot S (BA00332P), Section "Level measurement".
- Due to the orientation of the device, there may be a shift in the measured value, i.e. when the container is empty, the MEASURED VALUE parameter does not display zero. → To perform a position adjustment see also Page 68, Table 6: Position adjustment.
- For a description of the parameters mentioned, see
  - Page 62, Table 2: MEASURING MODE
  - Page 77, Table 10: BASIC SETUP
  - Page 79, Table 11: BASIC SETUP – "Linear" level type.
- For a description of further relevant parameters, see
  - Page 100, Table 16: EXTENDED SETUP
  - Page 121, Table 26: PROCESS VALUES.

⚠ WARNING
Changing the measuring mode can affect the adjustment data!
This situation can result in product overflow.
▶ Check calibration data when the measuring mode is changed.

	Description
1	Select the "Level" measuring mode via the MEASURING MODE parameter. On-site display: Menu path: GROUP SELECTION → MEASURING MODE Digital communication: See Page 62
2	If necessary, select "Level Standard" level mode using the LEVEL SELECTION parameter. On-site display: Menu path: GROUP SELECTION → MEASURING MODE "Level" → LEVEL SELECTION Digital communication: See Page 63
3	On-site display: Select BASIC SETUP function group. Menu path: GROUP SELECTION → OPERATING MENU → SETTINGS → BASIC SETUP

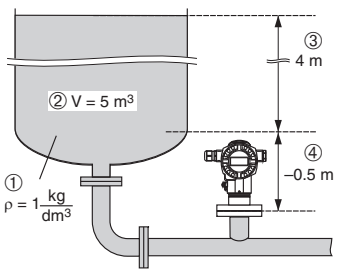

Fig. 13: Calibration without reference pressure – dry calibration

1 See table, step 9.
2 See table, step 10.
3 See table, step 11.
4 See table, step 12.

	Description
4	Select a pressure unit via the PRESS. ENG. UNIT parameter, here mbar for example.
5	Select the "Linear" option by means of the LEVEL MODE parameter.
6	Select the "Volume" option by means of the LIN. MEASURAND parameter.
7	Select a volume unit via the UNIT VOLUME parameter, here m^3 for example.
8	Select the "Dry" option by means of the CALIBRATION MODE parameter. See also the following note, point 3.
9	Enter the value for density via the ADJUST DENSITY parameter, here 1 kg/dm^3 for example.
10	Enter the tank volume via the TANK VOLUME parameter, here 5 m^3 for example.
11	Enter the tank height via the TANK HEIGHT parameter, here 4 m (13 ft) for example.
12	Enter the level offset via the ZERO POSITION parameter, here −0.5 m (-1,6 ft) for example.
13	Set the value for the lower current value (4 mA) by means of the SET LRV parameter.
14	Set the value for the upper current value (20 mA) by means of the SET URV parameter.
15	Result: The measuring range is set for 0...5 m^3.

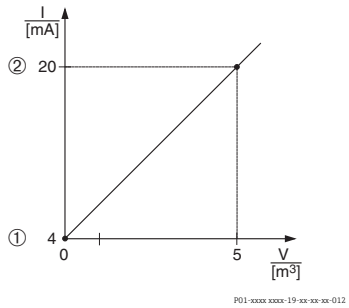

Fig. 14: Current output calibration

5 See table, step 13.
6 See table, step 14.

1. For this level type, the measured variables %, level, volume and mass are available. → See Page 79 ff.
2. You can also specify customer-specific units. See parameter description for PRESS. ENG. UNIT (→ Page 77), HEIGHT UNIT (→ Page 79), UNIT VOLUME (→ Page 80) and MASS UNIT (→ Page 81).
3. A level value is assigned to the lower and upper current value by means of the SET LRV (→ Page 86) and SET URV (→ Page 86) parameters respectively. Once you have selected the "Dry" calibration mode, the error message A711 "LRV or URV out of edit limits" can appear. The error message goes out as soon as level values which are within the editing limits are entered for the SET LRV and SET URV parameters.
   By means of the ENTER RESET CODE parameter (→ Page 124), you can use the code 2710 to automatically set the SET LRV and SET URV parameters to level values which are within the editing limits.

5.5 "Level Standard" level selection, "Pressure Linearized" level type

5.5.1 Semiautomatic entry of the linearisation table

Example:
In this example, the volume in a tank with a conical outlet should be measured in m^3.

Prerequisite:
- The tank can be filled. The linearisation characteristic must rise continuously.
- A minimum gap of 0.5 % of the distance between two points must be maintained. Spans for the "Pressure linearized" option: HYDR. PRESS MAX. – HYDR. PRESS MIN.; TANK CONTENT MAX. – TANK CONTENT MIN. Spans for the "Height linearized" option: LEVEL MAX – LEVEL MIN; TANK CONTENT MAX. – TANK CONTENT MIN.
- See also Operating Instructions for Deltabar S (BA00270P) or Cerabar S (BA00271P) or Deltapilot S (BA00332P).
- For a description of the parameters mentioned, see
  - Page 62, Table 2: MEASURING MODE
  - Page 68, Table 6: POSITION ADJUSTMENT
  - Page 77, Table 10: BASIC SETUP
  - Page 87, Table 11: BASIC SETUP – "Pressure Linearized" level type
  - Page 104, Table 18: LINEARISATION – on-site operation
  - Page 107, Table 19: LINEARISATION – Digital communication.
- For a description of further relevant parameters, see
  - Page 100, Table 16: EXTENDED SETUP
  - Page 121, Table 26: PROCESS VALUES.

⚠ WARNING
Changing the measuring mode can affect the adjustment data!
This situation can result in product overflow.
▶ Check calibration data when the measuring mode is changed.

	Description	
1	Deltabar S: before configuring the device for your application, the pressure piping must be cleaned and filled with fluid. See Operating Instructions BA00270P.	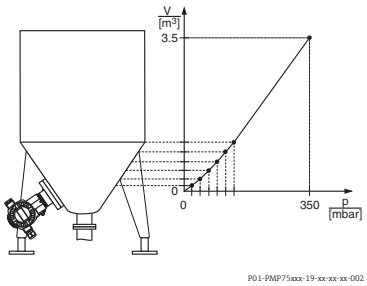
2	Carry out position adjustment if necessary. See Page 68, Table 6: POSITION ADJUSTMENT.	
	Carry out basic setup:	
3	If necessary, select the "Level" measuring mode via the MEASURING MODE parameter. On-site display: Menu path: GROUP SELECTION → MEASURING MODE Digital communication: See Page 62	
4	If necessary, select "Level Standard" level mode using the LEVEL SELECTION parameter. On-site display: Menu path: GROUP SELECTION → MEASURING MODE "Level" → LEVEL SELECTION Digital communication: See Page 63	

	Description	
5	On-site display: Select BASIC SETUP function group. Menu path: GROUP SELECTION → OPERATING MENU → SETTINGS → BASIC SETUP	
6	Select a pressure unit via the PRESS. ENG. UNIT parameter, here mbar for example.	
7	Select the "Pressure Linearized" option by means of the LEVEL MODE parameter. See also the following note, point 3.	
8	Select the "Volume" option by means of the LINd. MEASURAND parameter.	
9	Select a volume unit via the UNIT VOLUME parameter, here m^3 for example.	
10	Select HYDR. PRESS MIN. parameter.	
	Enter the minimum hydrostatic pressure to be expected, here 0 mbar for example.	
11	Select HYDR. PRESS MAX .	
	Enter the maximum hydrostatic pressure to be expected.	
	Carry out linearisation:	
12	Change the function group: Menu path: (GROUP SELECTION →) OPERATING MENU → SETTINGS → LINEARISATION	
13	Select TANK CONTENT MIN parameter.	
	Specify the minimum tank contents to be expected, here 0 m^3 for example.	
14	Select TANK CONTENT MAX parameter.	
	Specify the maximum tank contents to be expected, here 3.5 m^3 for example.	
15	On-site display: Select the "Editor table" option by means of the TABLE SELECTION parameter.	
16	Select the "Semiautomatic" option by means of the LIN. EDIT MODE parameter.	
17	Select the "New table" option by means of the EDITOR TABLE parameter.	

	Description
18	Enter linearisation table (min. 2 points, max. 32 points).
	Fill the tank to the height of the 1st point.
	LINE-NUMB: confirm value displayed.
	X-VAL.: the hydrostatic pressure present is displayed. On-site display, Digital communication: The X-VAL. displayed is saved by confirming the Y-value. See following line, Y-VAL. HART handheld terminal: Confirm X-VAL. displayed.
	Y-VAL.: enter the volume value, here 0 m^3 for example, and confirm the value.
19	On-site display: If you want to enter another point for the linearisation table, select the "Next point" option and enter the point as described in step 18. If you want to finish entering the values and activate the linearisation table, select the "Accept input table" option. Digital communication: You can enter further points for the linearisation table as explained in step 18. Once all the points have been entered, the table must be activated by means of the TAB. ACTIVATE parameter.
19	Result: The linearisation table has been entered.

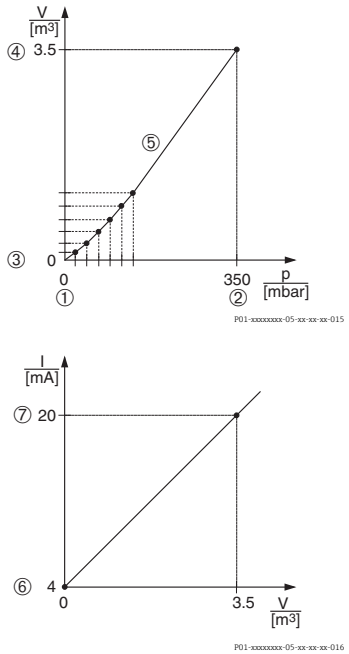

Fig. 15: Semiautomatic entry of the linearisation table

1 See table, step 10.
2 See table, step 11.
3 See table, step 13.
4 See table, step 14.
5 See table, steps 15 – 19.
6 See the following note, point 4.
7 See the following note, point 4

1. For this level type, the measured variables %, volume and mass are available. → See Page 87 ff.
2. You can also specify customer-specific units. See parameter description for PRESS. ENG. UNIT (→ Page 77), HEIGHT UNIT (→ Page 87), UNIT VOLUME (→ Page 87) and MASS UNIT (→ Page 88).
3. Once you have selected the "Pressure Linearized" level type, the warning message "W710 Set span too small. Not allowed." can appear. At this stage the linearisation table already consists of two points as standard. It could be the case that the 2nd value, and thus the highest X-VAL. of the linearisation table, is smaller than the minimum span permitted (→ MINIMUM SPAN, Page 120). The message goes out as soon as the highest X-VAL. is larger than the minimum span.
4. A level value is assigned to both the lower and upper current value with the SET LRV (→ Page 102) and SET URV (→ Page 102) parameters. If you enter values for TANK CONTENT MIN (→ Page 104 or 107) and TANK CONTENT MAX (→ Page 104 or 107), the SET LRV and SET URV parameters are also changed. If you want to assign values other than those for TANK CONTENT MIN and TANK CONTENT MAX to the lower and upper current values, the desired values must be entered for SET LRV and SET URV.

5.5.2 Manual entry of the linearisation table

Example:
In this example, the volume in a tank with a conical outlet should be measured in m^3.

Prerequisite:
- This is a theoretical calibration, i.e. the points for the linearisation table are known.
- A minimum gap of 0.5 % of the distance between two points must be maintained. Spans for the "Pressure linearized" option: HYDR. PRESS MAX. – HYDR. PRESS MIN.; TANK CONTENT MAX. – TANK CONTENT MIN. Spans for the "Height linearized" option: LEVEL MAX – LEVEL MIN; TANK CONTENT MAX. – TANK CONTENT MIN.
- See also Operating Instructions for Deltabar S (BA00270P) or Cerabar S (BA00271P), Section "Level measurement" or Deltapilot S (BA00332P), Section "Level measurement".
- For a description of the parameters mentioned, see
  - Page 62, Table 2: MEASURING MODE
  - Page 68, Table 6: POSITION ADJUSTMENT
  - Page 77, Table 10: BASIC SETUP
  - Page 87, Table 12: BASIC SETUP – "Pressure Linearized" level type
  - Page 104, Table 18: LINEARISATION – on-site operation
  - Page 107, Table 19: LINEARISATION – Digital communication.
- For a description of further relevant parameters, see
  - Page 100, Table 16: EXTENDED SETUP
  - Page 121, Table 28: PROCESS VALUES.

⚠ WARNING
Changing the measuring mode can affect the adjustment data!
This situation can result in product overflow.
▶ Check calibration data when the measuring mode is changed.

	Description	
1	Perform basic setup as per Section 5.3.1, steps 2 to 11.	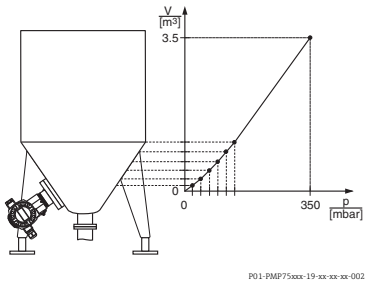
	Carry out linearisation:	
2	Change the function group: Menu path: (GROUP SELECTION →) OPERATING MENU → SETTINGS → LINEARISATION	
3	Select TANK CONTENT MIN parameter .	
	Specify the minimum tank contents to be expected, here 0 m^3 for example.	
4	Select TANK CONTENT MAX parameter .	
	Specify the maximum tank contents to be expected, here 3.5 m^3 for example.	

	Description
5	On-site display: Select the "Editor table" option by means of the TABLE SELECTION parameter.
6	Select the "Manual" option by means of the LIN. EDIT MODE parameter.
7	Select the "New table" option by means of the EDITOR TABLE parameter.
8	Enter linearisation table (min. 2 points, max. 32 points).
	LINE-NUMB: confirm value displayed.
	X-VAL.: enter the pressure value and confirm.
	Y-VAL.: enter the volume value, here 0 m^3 for example, and confirm.
9	On-site display If you want to enter another point for the linearisation table, select the "Next point" option and enter the point as described in step 8. If you want to finish entering the values and activate the linearisation table, select the "Accept input table" option. Digital communication: You can enter further points for the linearisation table as explained in step 8. Once all the points have been entered, the table must be activated by means of the TAB. ACTIVATE parameter.
10	Result: The linearisation table has been entered.

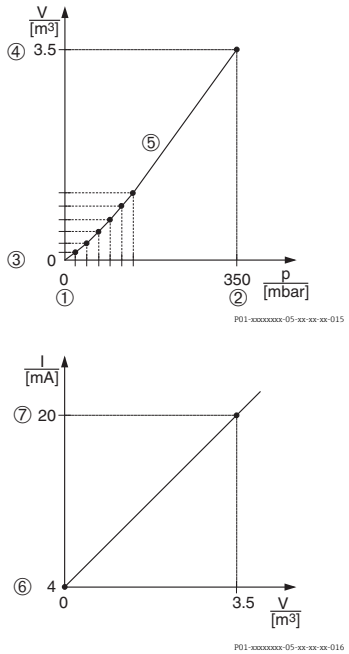

Fig. 16: Manual entry of the linearisation table

1 See Section 5.3.1, table, step 9.
2 See Section 5.3.1, table, step 10.
3 See table, step 3.
4 See table, step 4.
5 See table, steps 5 – 9.
6 See the following note, point 4.
7 See the following note, point 4.

1. For this level type, the measured variables %, volume and mass are available. → See Page 87 ff.
2. You can also specify customer-specific units. See parameter description for PRESS. ENG. UNIT (→ Page 77), HEIGHT UNIT (→ Page 87), UNIT VOLUME (→ Page 87) and MASS UNIT (→ Page 88).
3. Once you have selected the "Pressure Linearized" level type, the warning message "W710 Set span too small. Not allowed." can appear. At this stage the linearisation table already consists of two points as standard. It could be the case that the 2nd value, and thus the highest X-VAL. of the linearisation table, is smaller than the minimum span permitted (→ MINIMUM SPAN, Page 120). The message goes out as soon as the highest X-VAL. is larger than the minimum span.
4. A level value is assigned to both the lower and upper current value with the SET LRV (→ Page 102) and SET URV (→ Page 102) parameters. If you enter values for TANK CONTENT MIN (→ Page 104 or 107) and TANK CONTENT MAX (→ Page 104 or 107), the SET LRV and SET URV parameters are also changed. If you want to assign values other than those for TANK CONTENT MIN and TANK CONTENT MAX to the lower and upper current values, the desired values must be entered for SET LRV and SET URV.

5.6 "Level Standard" level selection, "Height Linearized" level type

5.6.1 Wet calibration and semiautomatic entry of the linearisation table

Example:
In this example, the height and the volume should be measured at the same time.

Prerequisite:
- The tank can be filled. The linearisation characteristic must rise continuously.
- A minimum gap of 0.5 % of the distance between two points must be maintained. Spans for the "Pressure linearized" option: HYDR. PRESS MAX. – HYDR. PRESS MIN.; TANK CONTENT MAX. – TANK CONTENT MIN. Spans for the "Height linearized" option: LEVEL MAX – LEVEL MIN; TANK CONTENT MAX. – TANK CONTENT MIN.
- See also Operating Instructions for Deltabar S (BA00270P) or Cerabar S (BA00271P) or Deltapilot S (BA00332P).
- For a description of the parameters mentioned, see
  - Page 62, Table 2: MEASURING MODE
  - Page 68, Table 6: POSITION ADJUSTMENT
  - Page 77, Table 10: BASIC SETUP
  - Page 89, Table 13: BASIC SETUP – "Height Linearized" level type
  - Page 104, Table 18: LINEARISATION – on-site operation
  - Page 107, Table 19: LINEARISATION – Digital communication.
- For a description of further parameters, see
  - Page 100, Table 16: EXTENDED SETUP
  - Page 121, Table 28: PROCESS VALUES.

⚠ WARNING
Changing the measuring mode can affect the adjustment data!
This situation can result in product overflow.
▶ Check calibration data when the measuring mode is changed.

	Description	
1	Deltabar S: before configuring the device for your application, the pressure piping must be cleaned and filled with fluid. See Operating Instructions BA00270P.	
2	Carry out position adjustment if necessary. See Page 68, Table 6: POSITION ADJUSTMENT.	
	Perform calibration for the 1st measured variable:	
3	If necessary, select the "Level" measuring mode via the MEASURING MODE parameter. On-site display: Menu path: GROUP SELECTION → MEASURING MODE See Page 62	

	Description
4	If necessary, select "Level Standard" level mode using the LEVEL SELECTION parameter. On-site display: Menu path: GROUP SELECTION → MEASURING MODE "Level" → LEVEL SELECTION Digital communication: Menu path: OPERATING MENU → SETTINGS → BASIC SETUP → MEASURING MODE "Level" → LEVEL SELECTION
5	On-site display: Select BASIC SETUP function group. Menu path: GROUP SELECTION →OPERATING MENU → SETTINGS → BASIC SETUP
6	Select a pressure unit via the PRESS. ENG. UNIT parameter, here mbar for example.
7	Select the "Height Linearized" option by means of the LEVEL MODE parameter.
8	Select the "Height + Volume" option by means of the COMB. MEASURAND parameter.
9	Select the unit for the 1st measured value via the HEIGHT UNIT parameter, here m for example.
10	Select the unit for the 2nd measured variable via the UNIT VOLUME parameter, here m3 for example.
11	Select LEVEL MIN parameter.
	Enter the minimum level to be expected, here 0 m for example.
12	Select LEVEL MAX parameter.
	Enter the maximum level to be expected, here 3 m (9.8 ft) for example.
13	Select the "Wet" option via the CALIBRATION MODE parameter (calibration mode for the 1st measured variable).
14	The pressure for the lower calibration point is present at the device, here 0 mbar for example.
	Select EMPTY CALIB. parameter.
	Enter the level value, here 0 m for example. Confirm the value to assign the pressure value present to the lower level value.
15	The pressure for the upper calibration point is present at the device, here 300 mbar (4.5 psi) for example.
	Select FULL CALIB. parameter.
	Enter the level value, here 3 m (9.8 ft) for example. Confirm the value to assign the pressure value present to the upper level value.
16	Result: The calibration for the 1st measured variable is carried out.

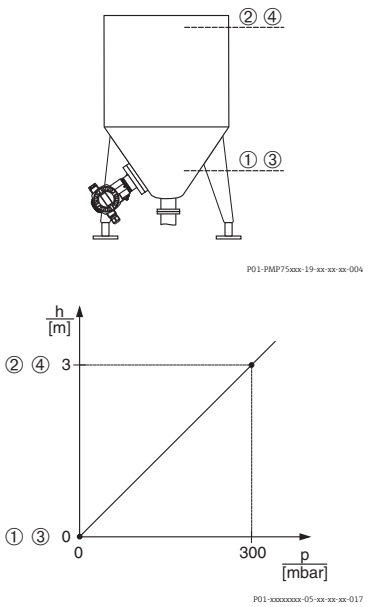

Fig. 17: Calibrating the 1st measured variable

1 See table, step 11.
2 See table, step 12.
3 See table, step 14.
4 See Table, step 15.

	Description
	Perform linearisation (calibration for the 2nd measured variable)
17	Change the function group. Menu path: (GROUP SELECTION →) OPERATING MENU → SETTINGS → LINEARISATION
18	Select TANK CONTENT MIN parameter.
	Specify the minimum tank contents to be expected, here 0 m^3 for example.
19	Select TANK CONTENT MAX parameter.
	Specify the maximum tank contents to be expected, here 5 m^3 for example.
20	On-site display: Select the "Editor table" option by means of the TABLE SELECTION parameter.
21	Select the "Semiautomatic" option by means of the LIN. EDIT MODE parameter.
22	Select the "New table" option by means of the EDITOR TABLE parameter.
23	Enter linearisation table (min. 2 points, max. 32 points).
	Fill the tank to the height of the 1st point.
	LINE-NUMB: confirm value displayed.
	X-VAL.: the hydrostatic pressure present is measured and converted to the corresponding level and displayed. On-site display, Digital communication: The X-VAL. displayed is saved by confirming the Y-value. See following line, Y-VAL. HART handheld terminal: Confirm X-VAL. displayed.
	Y-VAL.: enter the volume value, here 0 m^3 for example, and confirm the value.
24	On-site display If you want to enter another point for the linearisation table, select the "Next point" option and enter the point as described in step 23. If you want to finish entering the values and activate the linearisation table, select the "Accept input table" option. Digital communication: You can enter further points for the linearisation table as explained in step 23. Once all the points have been entered, the table must be activated by means of the TAB. ACTIVATE parameter.
25	Result: – The linearisation table has been entered. – The measured value display and the TANK CONTENT parameter display the 2nd measured value (here the volume). – The LEVEL BEFORE LIN parameter displays the 1st measured value (here the height). See also the following note, point 5.

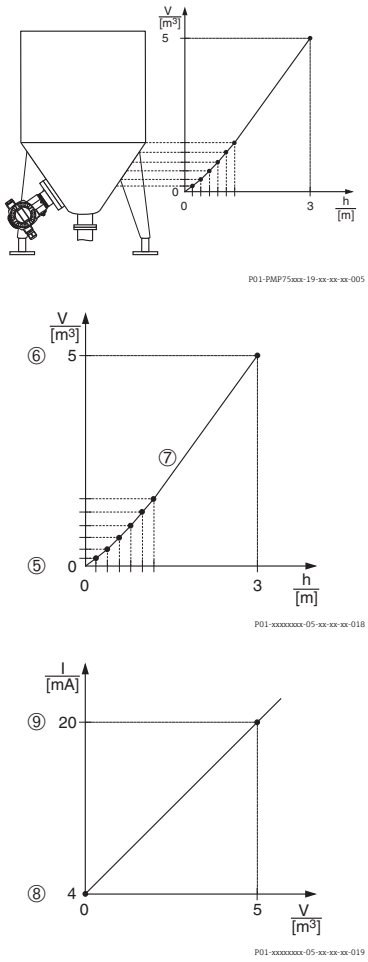

Fig. 18: Calibrating the 2nd measured variable

5 See table, step 18.
6 See table, step 19.
7 See table, steps 20 – 24.
8 See the following note, point 4.
9 See the following note, point 4.

1. For this level type, the measured variables "Height + %", "Height + Volume", "Height + Mass", "%-Height + %", "%-Height + Volume" and "%-Height + Mass" are available. → See Page 87 ff.
2. You can also specify customer-specific units. See parameter description for PRESS. ENG. UNIT (→ Page 77), HEIGHT UNIT (→ Page 90), UNIT VOLUME (→ Page 91) and MASS UNIT (→ Page 92).
3. Once you have selected the "Pressure Linearized" level type, the warning message "W710 Set span too small. Not allowed." can appear. At this stage the linearisation table already consists of two points as standard. It could be the case that the 2nd value, and thus the highest X-VAL. of the linearisation table, is smaller than the minimum span permitted (→ MINIMUM SPAN, Page 120). The message goes out as soon as the highest X-VAL. is larger than the minimum span.
4. A level value is assigned to both the lower and upper current value with the SET LRV (→ Page 102) and SET URV (→ Page 102) parameters.
   You can use the ASSIGN CURRENT parameter (→ Page 114) to specify whether the current output should depict the 1st or 2nd measured variable. Depending on the setting of the ASSIGN CURRENT parameter, enter the following values for SET LRV and SET URV:
   – ASSIGN CURRENT = tank content (factory setting) ⇒ %-value, volume value or mass value
   – ASSIGNMENT = height ⇒ level value

   The following applies for the setting ASSIGN CURRENT "Tank content":
   If you enter values for TANK CONTENT MIN (→ Page 104 or 107) and TANK CONTENT MAX (→ Page 104 or 107), the SET LRV and SET URV parameters are also changed. If you want to assign values other than those for TANK CONTENT MIN and TANK CONTENT MAX to the lower and upper current values, the desired values must be entered for SET LRV and SET URV.

   The following applies for the setting ASSIGN CURRENT "Height":
   If you enter values for LEVEL MIN (→ Page 93) and LEVEL MAX (→ Page 93), the SET LRV and SET URV parameters are also changed. If you want to assign values other than those for LEVEL MIN and LEVEL MAX to the lower and upper current values, the desired values must be entered for SET LRV and SET URV.
5. You can use the MENU DESCRIPTOR parameter (→ Page 111) to specify which measured value should be displayed on the on-site display.

5.6.2 Dry calibration and manual entry of the linearisation table

Example:
In this example, the height and the volume should be measured at the same time.

Prerequisite:
- This is a theoretical calibration, i.e. the points for the linearisation table are known.
- A minimum gap of 0.5 % of the distance between two points must be maintained. Spans for the "Pressure linearized" option: HYDR. PRESS MAX. – HYDR. PRESS MIN.; TANK CONTENT MAX. – TANK CONTENT MIN. Spans for the "Height linearized" option: LEVEL MAX – LEVEL MIN; TANK CONTENT MAX. – TANK CONTENT MIN.
- See also Operating Instructions for Deltabar S (BA00270P) or Cerabar S (BA00271P), Section "Level measurement" or Deltapilot S (BA00332P), Section "Level measurement".
- Due to the orientation of the device, there may be a shift in the measured value, i.e. when the container is empty, the MEASURED VALUE parameter does not display zero. → To perform a position adjustment see also Page 68, Table 6: Position adjustment.
- For a description of the parameters mentioned, see
  - Page 62, Table 2: MEASURING MODE
  - Page 77, Table 10: BASIC SETUP
  - Page 89, Table 12: BASIC SETUP – "Height Linearized" level type
  - Page 104, Table 18: LINEARISATION – on-site operation
  - Page 107, Table 19: LINEARISATION – Digital communication.
- For a description of further parameters, see
  - Page 100, Table 16: EXTENDED SETUP
  - Page 121, Table 28: PROCESS VALUES.

⚠ WARNING
Changing the measuring mode can affect the adjustment data!
This situation can result in product overflow.
▶ Check calibration data when the measuring mode is changed.

	Description
	Perform calibration for the 1st measured variable:
1	Perform calibration as per Section 5.4.2, steps 3 to 12.
2	Select the "Dry" option via the CALIBRATION MODE parameter (calibration mode for the 1st measured variable).
3	Enter the density of the fluid via the ADJUST DENSITY parameter, here 1 kg/dm³ for example.
4	If necessary, enter a level offset via the ZERO POSITION parameter, here 0 m for example.
5	Result: The calibration for the 1st measured variable is carried out.

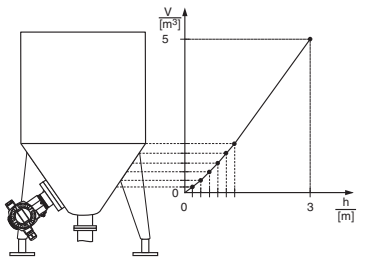

	Description
	Perform linearisation (calibration for the 2nd measured variable)
6	Change the function group. Menu path: (GROUP SELECTION →) OPERATING MENU → SETTINGS → LINEARISATION
7	Select TANK CONTENT MIN parameter.
	Specify the minimum tank contents to be expected, here 0 m^3 for example.
8	Select TANK CONTENT MAX parameter.
	Specify the maximum tank contents to be expected, here 5 m^3 for example.
9	On-site display: Select the "Editor table" option by means of the TABLE SELECTION parameter.
10	Select the "Manual" option by means of the LIN. EDIT MODE parameter.
11	Select the "New table" option by means of the EDITOR TABLE parameter.
12	Enter linearisation table (min. 2 points, max. 32 points).
	LINE-NUMB: confirm value displayed.
	X-VAL.: enter the height value and confirm.
	Y-VAL.: enter the volume value, here 0 m^3 for example, and confirm.
13	On-site display If you want to enter another point for the linearisation table, select the "Next point" option and enter the point as described in step 12. If you want to finish entering the values and activate the linearisation table, select the "Accept input table" option. Digital communication: You can enter further points for the linearisation table as explained in step 12. Once all the points have been entered, the table must be activated by means of the TAB. ACTIVATE parameter.
14	Result: – The linearisation table has been entered. – The measured value display and the TANK CONTENT parameter display the 2nd measured value (here the volume). – The LEVEL BEFORE LIN parameter displays the 1st measured value (here the height). See also the following note, point 5.

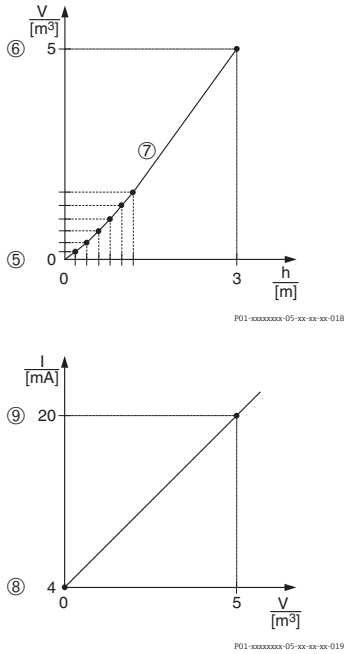

Fig. 19: Calibrating the 2nd measured variable

5 See table, step 7.
6 See table, step 8.
7 See table, steps 9 – 13.
8 See the following note, point 4.
9 See the following note, point 4.

1. For this level type, the measured variables "Height + %", "Height + Volume", "Height + Mass", "%-Height + %", "%-Height + Volume" and "%-Height + Mass" are available. → See Page 87 ff.
2. You can also specify customer-specific units. See parameter description for PRESS. ENG. UNIT (→ Page 77), HEIGHT UNIT (→ Page 90), UNIT VOLUME (→ Page 91) and MASS UNIT (→ Page 92).
3. Once you have selected the "Pressure Linearized" level type, the warning message "W710 Set span too small. Not allowed." can appear. At this stage the linearisation table already consists of two points as standard. It could be the case that the 2nd value, and thus the highest X-VAL. of the linearisation table, is smaller than the minimum span permitted

(→ MINIMUM SPAN, Page 120). The message goes out as soon as the highest X-VAL. is larger than the minimum span.

4. A level value is assigned to both the lower and upper current value with the SET LRV (→ Page 102) and SET URV (→ Page 102) parameters.
   You can use the ASSIGN CURRENT parameter (→ Page 114) to specify whether the current output should depict the 1st or 2nd measured variable. Depending on the setting of the ASSIGN CURRENT parameter, enter the following values for SET LRV and SET URV:
   – ASSIGN CURRENT = tank content (factory setting) ⇒ %- value, volume value or mass value
   – ASSIGNMENT = height ⇒ level value

   The following applies for the setting ASSIGN CURRENT "Tank content":
   If you enter values for TANK CONTENT MIN (→ Page 104 or 107) and TANK CONTENT MAX (→ Page 104 or 107), the SET LRV and SET URV parameters are also changed. If you want to assign values other than those for TANK CONTENT MIN and TANK CONTENT MAX to the lower and upper current values, the desired values must be entered for SET LRV and SET URV.

   The following applies for the setting ASSIGN CURRENT "Height":
   If you enter values for LEVEL MIN (→ Page 93) and LEVEL MAX (→ Page 93), the SET LRV and SET URV parameters are also changed. If you want to assign values other than those for LEVEL MIN and LEVEL MAX to the lower and upper current values, the desired values must be entered for SET LRV and SET URV.
5. You can use the MENU DESCRIPTOR parameter (→ Page 111) to specify which measured value should be displayed on the on-site display.

6 Flow measurement

6.1 Calibration

Example:
In this example, a volume flow should be measured in m^3/h.

- The "Flow measurement" measuring mode is only available for the Deltabar S differential pressure transmitter.
- See also Operating Instructions BA00270P Deltabar S, Section "Flow measurement".
- For a description of the parameters mentioned, see
  - Page 62, Table 2: MEASURING MODE
  - Page 68, Table 6: POSITION ADJUSTMENT
  - Page 96 ff, Table 12: BASIC SETUP
  - Page 102 ff, Table 15: EXTENDED SETUP.
- For a description of further parameters, see
  - Page 102, Table 15: EXTENDED SETUP
  - Page 122, Table 29: PROCESS VALUES.

⚠ WARNING
Changing the measuring mode can affect the adjustment data!
This situation can result in product overflow.
▶ Check calibration data when the measuring mode is changed.

	Description
1	Before configuring the device for your application, the pressure piping must be cleaned and the device filled with fluid. See Operating Instructions BA00270P.
2	Carry out position adjustment if necessary. See Page 68, Table 6: POSITION ADJUSTMENT.
3	If necessary, select the "Flow" measuring mode via the MEASURING MODE parameter. On-site display: Menu path: GROUP SELECTION → MEASURING MODE Digital communication: See Page 62
4	On-site display: Select BASIC SETUP function group. Menu path: GROUP SELECTION → OPERATING MENU → SETTINGS → BASIC SETUP
5	Select a pressure unit via the PRESS. ENG. UNIT parameter, here mbar for example.
6	Select the "Volume p. cond." option by means of the FLOW-MEAS. TYPE parameter.
7	Select a flow unit via the UNIT FLOW parameter, here m^3/h for example.
8	Select MAX. FLOW parameter.
	Enter the maximum flow value of the primary element, here 6000 m^3/h for example. See also layout sheet of primary element.
9	Select MAX PRESS. FLOW parameter.
	Enter the maximum pressure, here 400 mbar (6 psi) for example. See also layout sheet of primary element.
10	Result: The device is configured for flow measurement.

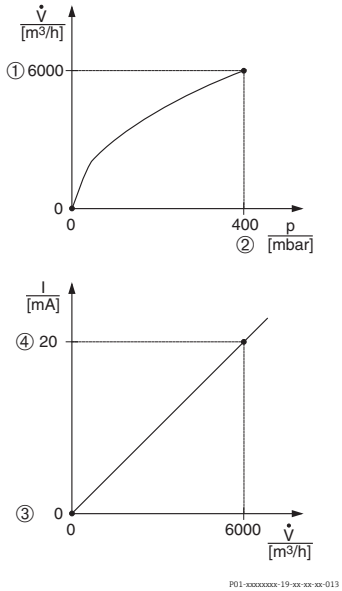

Fig. 20: Flow measurement calibration

1 See table, step 8.
2 See table, step 9.
3 See the following note, point 4.
4 See the following note, point 4.

1. You can also perform calibration by means of the QUICK SETUP menu. → See Page 66 ff, Table 5: QUICK SETUP menu.
2. Using the FLOW-MEAS. TYPE parameter, you can choose between the following flow types:
   – Volume p. cond. (volume under operating conditions)
   – Gas norm. cond. (norm volume under norm conditions in Europe: 1013.25 mbar and 273.15 K (0°C))
   – Gas std. cond. (standard volume under standard conditions in USA: 1013.25 mbar (14.7 psi) and 288. 15 K (15°C/59°F))
   – Mass
3. Depending on the flow type selected, you can choose between various units. You can also specify a customer-specific unit.
   See parameter description for PRESS. ENG. UNIT (→ Page 97), UNIT FLOW (→ Page 98), NORM FLOW UNIT (→ Page 98), STD. FLOW UNIT (→ Page 98) and MASS FLOW UNIT (→ Page 99).
4. A flow value or a pressure value is assigned to both the lower and upper current value with the SET LRV (→ Page 103) and SET URV (→ Page 104) parameters.
   You can use the LINEAR/SQROOT parameter (→ Page 114) to specify whether the current output should depict the linear pressure signal or the Flow (square root) flow signal. Depending on the setting of the LINEAR/SQROOT parameter, enter the following values for SET LRV and SET URV:
   – LINEAR/SQROOT = Flow (square root) (factory setting) ⇒ flow value
   – LINEAR/SQROOT = Differential pres. ⇒ pressure value

   The following applies for the setting LINEAR/SQROOT "Flow (square root)":
   As per the factory settings, the lower current value is set to equal zero and the upper current value is set to the MAX. FLOW value. If you enter a value for MAX. FLOW, the SET URV parameter is also changed. If you want to assign values other than zero and MAX. FLOW to the lower and upper current values, the desired values must be entered for SET LRV and SET URV.

   The following applies for the setting LINEAR/SQROOT "Differential pres.":
   As per the factory settings, the lower current value is set to equal zero and the upper current value is set to the MAX. PRESS. FLOW value. If you enter a value for MAX PRESS. FLOW, the SET URV parameter is also changed. If you want to assign values other than zero and MAX PRESS. FLOW to the lower and upper current values, the desired values must be entered for SET LRV and SET URV.
5. In the lower measuring range, small flow quantities (creepages) can lead to large measured value fluctuations. You can activate low flow cut-off via the LOW FLOW CUT-OFF parameter (→ Page 103).

6.2 Totalizers

Example:
In this example, the volume flow should be totalised and displayed in the unit m^3E^3. Negative flows should be added to the flow rate.

- For a description of the parameters mentioned, see
  - Page 109 ff, Table 18: TOTALIZER SETUP
  - Page 122 ff, Table 29: PROCESS VALUES
- Totalizer 1 can be reset. Totalizer 2 cannot be reset.

	Description
1	Calibrate the device as per Section 6.1.
2	Change the function group: (GROUP SELECTION →) OPERATING MENU → SETTINGS → TOTALIZER SETUP
3	Select a flow unit via the TOTALIZER 1 UNIT parameter, here m^3 E^3 for example.
4	Use the NEG. FLOW TOT. 1 parameter to specify the totalising mode for negative flows, here the "Positive" option for example.
5	Reset totalizer 1 to zero via the RESET TOTALIZER parameter.
6	Result: The TOTALIZER 1 and TOTAL. 1 OVERFLOW parameters display the totalised volume flow.

- You can also specify a customer-specific unit. → See parameter description for TOTALIZER 1 UNIT (→ Page 110) and TOTALIZER 2 UNIT (→ Page 111).
- The TOTALIZER 1 and TOTAL. 1 OVERFLOW parameters display the totalised flow value of the first totalizer. The TOTALIZER 2 and TOTAL. 2 OVERFLOW parameters display the totalised flow value of the second totalizer. → See Page 122 ff, PROCESS VALUES function group.
- You can use the MENU DESCRIPTOR parameter (→ Page 111) to specify which measured value should be displayed on the on-site display.

7 On-site display operating menu

The "Flow" measuring mode is only available for the Deltabar S differential pressure transmitter (not valid for (160 bar (2400 psi) and 250 bar (3750 psi) measuring cell). Depending on the parameter configuration, not all submenus and parameters are available. In the column "Measuring mode, Level mode or Level selection" all available operating modes are listed.

Level 1	Level 2	Level 3	Level 4	Measuring mode, Level mode or Level selection	Display ID	See page
LANGUAGE	LANGUAGE			all	079	62
MEASURING MODE	MEASURING MODE			all	389	62
		Level	LEVEL SELECTION		020	63
		Flow				
		Pressure				
QUICK SETUP	POS.ZERO ADJUST			all	685	64
	POS. INPUT VALUE				563	64
	SET LRV			Pressure	245	64
	SET URV			Pressure	246	64
	EMPTY CALIB.			Level	314	66
	FULL CALIB.			Level	315	66
	MAX. FLOW			Flow	311	67
	MAX PRESS. FLOW			Flow	634	67
	DAMPING VALUE			all	247	65
OPERATING MENU	**SETTINGS**	**POSITION ADJUST.**	POS.ZERO ADJUST	all	685	64
			POS. INPUT VALUE		563	64
			CALIB. OFFSET		319	68
		BASIC SETUP	PRESS. ENG. UNIT	Pressure	060	69
			CUSTOMER UNIT P		075	69
			CUST.UNIT FACT.P		317	69
			SET LRV		245	69
			SET URV		246	70
			GET LRV		309	70
			GET URV		310	70
			DAMPING VALUE		247	77
			PRESS. ENG. UNIT	Level Easy Pressure	060	70
			CUSTOMER UNIT P		075	71
			CUST.UNIT FACT.P		317	71
			OUTPUT UNIT		023	71
			CALIBRATION MODE		008	72
			EMPTY CALIB.	(Wet)	010	72
			EMPTY CALIB.	(Dry)	010	72
			FULL CALIB.	(Wet)	004	72
			FULL CALIB.	(Dry)	004	73

Level 1	Level 2	Level 3	Level 4	Measuring mode, Level mode or Level selection	Display ID	See page
			EMPTY PRESSURE	(Dry)	011	72
			FULL PRESSURE	(Dry)	005	73
			SET LRV		013	73
			SET URV		012	73
			DAMPING VALUE		247	73
			PRESS. ENG. UNIT	Level Easy Height	060	74
			CUSTOMER UNIT P		075	74
			CUST.UNIT FACT.P		317	74
			OUTPUT UNIT		023	75
			HEIGHT UNIT		003	75
			CALIBRATION MODE		008	75
			DENSITY UNIT		001	75
			ADJUST DENSITY		007	75
			EMPTY CALIB.	(Wet)	010	76
			EMPTY CALIB.	(Dry)	010	76
			FULL CALIB.	(Wet)	004	76
			FULL CALIB.	(Dry)	004	76
			EMPTY HEIGHT	(Dry)	009	76
			FULL HEIGHT	(Dry)	006	77
			SET LRV		013	77
			SET URV		012	77
			DAMPING VALUE		247	77
			PRESS. ENG. UNIT	Level Standard	060	77
			CUSTOMER UNIT P		075	78
			CUST.UNIT FACT.P		317	78
			LEVEL MODE		718	78
			LIN. MEASURAND	Linear	804	79
			HEIGHT UNIT		708	79
			CUSTOMER UNIT H		706	79
			CUST. UNIT FACT. H		705	80
			UNIT VOLUME		313	80
			CUSTOMER UNIT V		608	80
			CUST. UNIT FACT. V		607	81
			MASS UNIT		709	81
			CUSTOMER UNIT M		704	81
			CUST. UNIT FACT. M		703	82
			CALIBRATION MOD		392	82
			EMPTY CALIB.		314	82
			EMPTY PRESSURE		710	83
			FULL CALIB.		315	83
			FULL PRESSURE		711	83
			ADJUSTED DENSITY		810	83

Level 1	Level 2	Level 3	Level 4	Measuring mode, Level mode or Level selection	Display ID	See page
			DENSITY UNIT		812	83
			ADJUST DENSITY		316	83
			UNIT VOLUME		316	84
			CUSTOMER UNIT V		608	84
			CUST. UNIT FACT. V		607	84
			TANK VOLUME		858	84
			HEIGHT UNIT		708	85
			CUSTOMER UNIT H		706	85
			CUST. UNIT FACT. H		705	85
			TANK HEIGHT		859	85
			100% POINT		813	86
			ZERO POSITION		814	86
			SET LRV		719	86
			SET URV		720	86
			DAMPING VALUE		247	86
			LINd. MEASURAND	Pressure Linearized	805	87
			UNIT VOLUME		313	87
			CUSTOMER UNIT V		608	87
			CUST. UNIT FACT. V		607	88
			MASS UNIT		709	88
			CUSTOMER UNIT M		704	88
			CUST. UNIT FACT. M		703	89
			HYDR. PRESS MIN.		775	89
			HYDR. PRESS MAX.		761	89
			DAMPING VALUE		247	89
			COMB. MEASURAND	Height Linearized	806	90
			HEIGHT UNIT		708	90
			CUSTOMER UNIT H		706	90
			CUST. UNIT FACT. H		705	90
			UNIT VOLUME		313	91
			CUSTOMER UNIT V		608	91
			CUST. UNIT FACT. V		607	91
			MASS UNIT		709	92
			CUSTOMER UNIT M		704	92
			CUST. UNIT FACT. M		703	92
			LEVEL MIN		755	93
			LEVEL MAX		712	93
			CALIBRATION MODE		392	93
			EMPTY CALIB.		314	93
			EMPTY PRESSURE		710	94
			FULL CALIB.		315	94
			FULL PRESSURE		711	94

Level 1	Level 2	Level 3	Level 4	Measuring mode, Level mode or Level selection	Display ID	See page
			ADJUSTED DENSITY		810	94
			DENSITY UNIT		812	94
			ADJUST DENSITY		316	94
			HEIGHT UNIT		708	95
			CUSTOMER UNIT H		706	95
			CUST. UNIT FACT. H		705	95
			100% POINT		813	96
			ZERO POSITION		814	96
			DAMPING VALUE		247	96
			PRESS. ENG. UNIT	Flow	060	97
			CUSTOMER UNIT P		075	97
			CUST. UNIT FACT. P		317	97
			FLOW-MEAS. TYPE		640	98
			UNIT FLOW		391	98
			NORM FLOW UNIT		661	98
			STD. FLOW UNIT		660	98
			MASS FLOW UNIT		571	99
			CUSTOMER UNIT F		610	99
			CUST. UNIT FACT. F		609	99
			MAX. FLOW		311	100
			MAX PRESS. FLOW		634	100
			DAMPING VALUE		247	100
		EXTENDED SETUP	TEMP. ENG. UNIT	Pressure	318	100
			TEMP. ENG. UNIT	Level	318	101
			DENSITY UNIT		(001)/ (812)	101
			ADJUST DENSITY		(007)/ (316)	101
			PROCESS DENSITY		(025)/ (811)	101
			SET LRV		762	102
			SET URV		763	102
			TEMP. ENG. UNIT	Flow	318	103
			LOW FLOW CUT-OFF		442	103
			SET. L. FL. CUT-OFF		323	103
			SET LRV		637	103
			SET URV		638	104
		LINEARIZATION	TANK CONTENT MIN	Level	759	104
			TANK CONTENT MAX		713	104
			TABLE SELECTION		808	105
			LIN. EDIT MODE		397	105
			EDITOR TABLE		809	105
			LINE-NUMB:		549	105

Level 1	Level 2	Level 3	Level 4	Measuring mode, Level mode or Level selection	Display ID	See page
			Y-VAL:		551	105
			X-VAL:		550	106
			TABLE EDITOR		770	109
			MEASURING TABLE		549	106
			MEASURING TABLE		717	106
			TANK DESCRIPTION		815	106
		TOTALISER SETUP	TOTALIZER 1 UNIT	Flow	662, 398, 666, 664	110
			TOT. 1 USER UNIT		627	110
			FACT.U.U.TOTAL.1		329	110
			NEG. FLOW TOT. 1		400	110
			RESET TOTALISER1		331	111
			TOTALIZER 2 UNIT		663, 399, 667, 665	111
			TOT. 2 UNIT TEXT		628	111
			FACT.U.U.TOTAL.2		330	111
			NEG. FLOW TOT. 2		416	111
	SAFETY CONFIRM. See Safety Manual for Deltabar S (SD00189), Cerabar S (SD00190) or Deltapilot S (SD00213P).					
	DISPLAY	MAIN LINE CONT.		all	419	111
		MAIN DATA FORMAT			688	112
		ALTERNATE DATA			423	112
		DISPLAY CONTRAST			339	112
		DIGITS SET			840	112
	OUTPUT	OUTPUT CURRENT		all	254	112
		CURRENT CHARACT.			694, 695 696, 764	113
		OUTPUT FAIL MODE			388	113
		ALT.CURR.OUTPUT			597	114
		SET MAX. ALARM			342	114
		SET MIN. CURRENT			343	114
		ASSIGN CURRENT		Height Linearized	760	114
		LINEAR/SQROOT		Flow	390	114
	TRANSMITTER INFO	**HART DATA**	CURRENT MODE	all	052	115
			BUS ADDRESS		345	115
			DEVICE TYPE		002, 351, 802	115
			DEVICE REVISION		699	115
			PREAMBLE NUMBER		036	116
			MANUFACTOR ID		432	116
			HART MESSAGE		271	116
			HART DATE		481	116
		TRANSMITTER DATA	DEVICE SERIAL No	all	354	117
			ELECTR.SERIAL No		386	117

Level 1	Level 2	Level 3	Level 4	Measuring mode, Level mode or Level selection	Display ID	See page
			CUST. TAG NUMBER		055	117
			LONG TAG NUMBER		305	117
			ADDITIONAL INFO.		272	117
			DEVICE DESIGN.		350	117
			HARDWARE REV.		266	117
			SOFTWARE VERSION		264	117
			CONFIG RECORDER		352	117
			PCB TEMPERATURE		357	117
			Allowed Min.TEMP		358	117
			Allowed Max.TEMP		359	117
			DIP STATUS		363	118
		PROCESS CONNECTION	Pmax PROC. CONN.	all	570	118
			PROC.CONN.TYPE		482	118
			MAT.PROC.CONN. +		360	118
			MAT.PROC.CONN. -		361	118
			SEAL TYPE		362	119
		SENSOR DATA	SENSOR SER. No.	all	250	120
			PRESS.SENS LOLIM		484	120
			PRESS.SENS HILIM		485	120
			MINIMUM SPAN		591	120
			SENSOR MEAS.TYPE		581	120
			MAT. MEMBRANE		365	120
			FILLING FLUID		366	120
			Tmin SENSOR		368	120
			Tmax SENSOR		369	120
			SENS H/WARE REV		487	120
	PROCESS INFO	**PROCESS VALUES**	PRESSURE	all	301	121
			CORRECTED PRESS.		434	121
			SENSOR PRESSURE		584	121
			SENSOR TEMP.		367	121
			MEAS. VAL. TREND		378	121
			LEVEL BEFORE LIN	Linear Height Linearized	050	122
			TANK CONTENT	Pressure Linearized Height Linearized	370	122
			SUPPRESSED FLOW	Flow	375	123
			TOTALISER 1		652	123
			TOTAL.1 OVERFLOW		655	123
			TOTALISER 2		657	123
			TOTAL.2 OVERFLOW		658	123
		PEAK HOLD INDIC.	COUNTER:P > Pmax	all	380	123
			MAX. MEAS.PRESS.		383	123
			COUNTER:P < Pmin		467	123

Level 1	Level 2	Level 3	Level 4	Measuring mode, Level mode or Level selection	Display ID	See page
			MIN. MEAS.PRESS.		469	123
			COUNTER:T > Tmax		404	124
			MAX. MEAS.TEMP.		471	124
			COUNTER:T < Tmin		472	124
			MIN. MEAS.TEMP.		474	124
			PCB COUNT:T>Tmax		488	124
			PCB MAX. TEMP.		490	124
			PCB COUNT:T<Tmin		492	124
			PCB MIN. TEMP.		494	124
			RESET PEAKHOLD		382	124
	OPERATION	ENTER RESET CODE		all	047	124
		OPERATING HOURS			409	124
		INSERT PIN No			48	125
		HistoROM AVAIL.			831	125
		DOWNLOAD SELECT.			014	125
		HistoROM CONTROL			832	125
	DIAGNOSTICS	**SIMULATION**	SIMULATION MODE	all	413	126
			SIM. PRESSURE		414	126
			SIM.FLOW VALUE	Flow	639	126
			SIM. LEVEL	Level	714	126
			SIM. TANK CONT.	Level	715	126
			SIM. CURRENT		270	126
			SIM. ERROR NO.		476	127
		MESSAGES	ALARM STATUS	all	046	127
			LAST DIAG. CODE		564	127
			ACK. ALARM MODE		401	127
			ACK. ALARM		500	127
			RESET ALL ALARMS		603	128
			ERROR No.		600	128
			SELECT ALARMTYPE		595	128
			ALARM DELAY		336	128
			ALARM DISPL.TIME		480	128
		USER LIMITS	PminALARM WINDOW	all	332	129
			PmaxALARM WINDOW		333	129
			TminALARM WINDOW		334	129
			TmaxALARM WINDOW		335	129
	SERVICE	**SYSTEM 2**	CURR. TRIM 4mA	all	045	129
			CURR. TRIM 20mA		042	130
			OFFSET 4mA TRIM		043	130
			OFFSET 20mA TRIM		044	130

8 FieldCare operating menu

The "Flow" measuring mode is only available for the Deltabar S differential pressure transmitter (not valid for (160 bar (2400 psi) and 250 bar (3750 psi) measuring cell).
Depending on the parameter configuration, not all submenus and parameters are available.
In the column "Measuring mode, Level mode or Level selection" all available operating modes are listed.

Level 1	Level 2	Level 3	Level 4	Measuring mode, Level mode or Level selection	See page
MEASURING MODE	MEASURING MODE				62
	LEVEL SELECTION			Level	63
	LINEAR/SQROOT			Pressure and Flow	114
	HART PRIMARY VALUE IS			all	116
QUICK SETUP	**DEVICE INFO**	STATUS LOCKING (DIP STATUS)		all	118
		CUST. TAG NUMBER			117
		LONG TAG NUMBER			117
		ADDITIONAL INFO.			117
		HART MESSAGE			116
		HART DATE			116
	UNITS	PRESS. ENG. UNIT		Pressure	69
		CUST.UNIT FACT.P			69
		CUSTOMER UNIT P			69
		TEMP. ENG. UNIT			100
		PRESS. ENG. UNIT		Level Easy Pressure	70
		CUST.UNIT FACT.P			71
		CUSTOMER UNIT P			71
		PRESS. ENG. UNIT		Level Easy Height	74
		CUST.UNIT FACT.P			74
		CUSTOMER UNIT P			74
		PRESS. ENG. UNIT		Level Standard	77
		CUST.UNIT FACT.P			78
		CUSTOMER UNIT P			78
		TEMP. ENG. UNIT			100
		PRESS. ENG. UNIT		Flow	97
		CUST.UNIT FACT.P			97
		CUSTOMER UNIT P			97
		TEMP. ENG. UNIT			103
	RANGE VALUES	SET LRV		Pressure	64
		SET URV			64
		PRESS. SENS LOLIM			120
		PRESS. SENS HILIM			120
		LINEAR/SQROOT			114
		CALIB. OFFSET			68

Level 1	Level 2	Level 3	Level 4	Measuring mode, Level mode or Level selection	See page
		POS. ZERO ADJUST			64
		SET MIN. CURRENT			114
		DAMPING VALUE			65
		EMPTY PRESSURE		Level Standard	72
		FULL PRESSURE			73
		PRESS. SENS LOLIM			120
		PRESS. SENS HILIM			120
		CALIB. OFFSET			68
		POS. ZERO ADJUST			65
		SET MIN. CURRENT			114
		DAMPING VALUE			66
		EMPTY PRESSURE		Level Easy Pressure	72
		FULL PRESSURE			73
		PRESS. SENS LOLIM			120
		PRESS. SENS HILIM			120
		CALIB. OFFSET			68
		POS. ZERO ADJUST			65
		SET MIN. CURRENT			114
		DAMPING VALUE			73
		EMPTY PRESSURE		Level Easy Height	72
		FULL PRESSURE			73
		PRESS. SENS LOLIM			120
		PRESS. SENS HILIM			120
		CALIB. OFFSET			68
		POS. ZERO ADJUST			65
		SET MIN. CURRENT			114
		DAMPING VALUE			77
		MIN.PRESS. FLOW		Flow	67
		MAX.PRESS. FLOW			67
		PRESS. SENS LOLIM			120
		PRESS. SENS HILIM			120
		LINEAR/SQROOT			114
		CALIB. OFFSET			68
		POS. ZERO ADJUST			67
		SET MIN. CURRENT			114
		DAMPING VALUE			67
	FLOW CUT-OFF	LOW FLOW CUT-OFF		Flow	103
		SET.L.FL.CUT-OFF			103
	DISP/PV SETTINGS	FLOW-MEAS. TYPE		Flow	98
		MASS FLOW UNIT			99
		MAX. FLOW			100
		UNIT FLOW			98
		NORM FLOW UNIT			98

Level 1	Level 2	Level 3	Level 4	Measuring mode, Level mode or Level selection	See page
		STD. FLOW UNIT			98
	LEVEL ADJUST	EMPTY CALIB.		Level Standard	72
		EMPTY PRESSURE			72
		FULL CALIB.			72
		FULL PRESSURE			73
		LEVEL MODE			78
		LIN. MEASURAND			79
		CALIBRATION MODE			82
		OUTPUT UNIT		Level Easy Pressure	71
		CALIBRATION MODE			72
		EMPTY CALIB.			72
		EMPTY PRESSURE			72
		FULL CALIB.			72
		FULL PRESSURE			73
		OUTPUT UNIT		Level Easy Height	75
		HEIGHT UNIT			75
		CALIBRATION MODE			75
		EMPTY CALIB.			76
		EMPTY HEIGHT			76
		EMPTY PRESSURE			72
		FULL CALIB.			76
		FULL HEIGHT			77
		FULL PRESSURE			73
		DENSITY UNIT			75
		ADJUST DENSITY			75
	ALARM SETTINGS	OUTPUT FAIL MODE		all	113
		ALT. CURR. OUTPUT			114
		VIEW ALARMS SET.			131
OPERATING MENU	**SETTINGS**	**POSITION ADJUST.**	PRESSURE	all	123
			POS.ZERO ADJUST		68
			POS. INPUT VALUE		68
			CALIB. OFFSET		68
		BASIC SETUP	PRESS. ENG. UNIT	Pressure	69
			CUSTOMER UNIT P		69
			CUST. UNIT FACT. P		69
			PRESS. SENS. LOLIM		120
			PRESS. SENS. HILIM		120
			LINEAR/SQROOT		114
			SET LRV		69
			SET URV		70
			GET LRV		70
			GET URV		70
			DAMPING VALUE		70

Level 1	Level 2	Level 3	Level 4	Measuring mode, Level mode or Level selection	See page
		BASIC SETUP	PRESS. ENG. UNIT	Level Easy Pressure	70
			CUSTOMER UNIT P		71
			CUST. UNIT FACT. P		71
			PRESS. SENS. LOLIM		120
			PRESS. SENS. HILIM		120
			OUTPUT UNIT		71
			CALIBRATION MODE		72
			EMPTY CALIB.		72
			EMPTY PRESSURE		72
			FULL CALIB.		73
			FULL PRESSURE		73
			SET LRV		73
			SET URV		73
			DAMPING VALUE		73
		BASIC SETUP	PRESS. ENG. UNIT	Level Easy Height	74
			CUSTOMER UNIT P		74
			CUST. UNIT FACT. P		74
			PRESS. SENS. LOLIM		120
			PRESS. SENS. HILIM		120
			OUTPUT UNIT		75
			HEIGHT UNIT		75
			CALIBRATION MODE		75
			DENSITY UNIT		75
			ADJUST DENSITY		75
			EMPTY CALIB.		76
			EMPTY HEIGHT		76
			EMPTY PRESSURE		72
			FULL CALIB.		76
			FULL HEIGHT		77
			FULL PRESSURE		73
			SET LRV		77
			SET URV		77
			DAMPING VALUE		77
		BASIC SETUP	PRESS. ENG. UNIT	Level Standard LEVEL MODE = Linear, LIN. MEASURAND = **% (Height)** CALIBRATION MODE = **Dry**	77
			CUSTOMER UNIT P		78
			CUST. UNIT FACT. P		78
			PRESS. SENS. LOLIM		120
			PRESS. SENS. HILIM		120
			LEVEL MODE		78
			LIN. MEASURAND		79
			HEIGHT UNIT		79
			CUSTOMER UNIT H		79
			CUSTOMER UNIT H		80

Level 1	Level 2	Level 3	Level 4	Measuring mode, Level mode or Level selection	See page
			CALIBRATION MODE		82
			DENSITY UNIT		83
			ADJUST DENSITY		83
			100% POINT		86
			ZERO POSITION		86
			SET LRV		86
			SET URV		86
			DAMPING VALUE		86
		BASIC SETUP	PRESS. ENG. UNIT	Level Standard LEVEL MODE = Linear, LIN. MEASURAND = **% (Height)** CALIBRATION MODE = **Wet**	77
			CUSTOMER UNIT P		78
			CUST. UNIT FACT. P		78
			PRESS. SENS. LOLIM		120
			PRESS. SENS. HILIM		120
			LEVEL MODE		78
			LIN. MEASURAND		79
			CALIBRATION MODE		82
			EMPTY CALIB.		82
			EMPTY PRESSURE		83
			FULL CALIB.		83
			FULL PRESSURE		83
			SET LRV		86
			SET URV		86
			DAMPING VALUE		86
		BASIC SETUP	PRESS. ENG. UNIT	Level Standard LEVEL MODE = Linear, LIN. MEASURAND = **Height** CALIBRATION MODE = **Dry**	77
			CUSTOMER UNIT P		78
			CUST. UNIT FACT. P		78
			PRESS. SENS. LOLIM		120
			PRESS. SENS. HILIM		120
			LEVEL MODE		78
			LIN. MEASURAND		79
			HEIGHT UNIT		79
			CUSTOMER UNIT H		79
			CUSTOMER UNIT H		80
			CALIBRATION MODE		82
			DENSITY UNIT		83
			ADJUST DENSITY		83
			ZERO POSITION		86
			SET LRV		86
			SET URV		86
			DAMPING VALUE		86

Level 1	Level 2	Level 3	Level 4	Measuring mode, Level mode or Level selection	See page
		BASIC SETUP	PRESS. ENG. UNIT	Level Standard LEVEL MODE = Linear, LIN. MEASURAND = **Height** CALIBRATION MODE = **Wet**	77
			CUSTOMER UNIT P		78
			CUST. UNIT FACT. P		78
			PRESS. SENS. LOLIM		120
			PRESS. SENS. HILIM		120
			LEVEL MODE		78
			LIN. MEASURAND		79
			HEIGHT UNIT		85
			CUSTOMER UNIT H		79
			CUSTOMER UNIT H		80
			CALIBRATION MODE		82
			EMPTY CALIB.		82
			EMPTY PRESSURE		83
			FULL CALIB.		83
			FULL PRESSURE		83
			ADJUST DENSITY		83
			SET LRV		86
			SET URV		86
			DAMPING VALUE		86
		BASIC SETUP	PRESS. ENG. UNIT	Level Standard LEVEL MODE = Linear, LIN. MEASURAND = **Volume** CALIBRATION MODE = **Dry**	77
			CUSTOMER UNIT P		78
			CUST. UNIT FACT. P		78
			PRESS. SENS. LOLIM		120
			PRESS. SENS. HILIM		120
			LEVEL MODE		78
			LIN. MEASURAND		79
			HEIGHT UNIT		79
			UNIT VOLUME		80
			CUSTOMER UNIT V		80
			CUST. UNIT FACT. V		81
			CALIBRATION MODE		82
			DENSITY UNIT		83
			ADJUST DENSITY		83
			UNIT VOLUME		84
			CUSTOMER UNIT V		84
			CUST. UNIT FACT. V		84
			TANK VOLUME		84
			TANK HEIGHT		85
			ZERO POSITION		86
			SET LRV		86
			SET URV		86
			DAMPING VALUE		86

Level 1	Level 2	Level 3	Level 4	Measuring mode, Level mode or Level selection	See page
		BASIC SETUP	PRESS. ENG. UNIT	Level Standard LEVEL MODE = Linear, LIN. MEASURAND = **Volume** CALIBRATION MODE = **Wet**	77
			CUSTOMER UNIT P		78
			CUST. UNIT FACT. P		78
			PRESS. SENS. LOLIM		120
			PRESS. SENS. HILIM		120
			LEVEL MODE		78
			LIN. MEASURAND		79
			UNIT VOLUME		84
			CUSTOMER UNIT V		84
			CUST. UNIT FACT. V		84
			CALIBRATION MODE		82
			EMPTY CALIB.		82
			EMPTY PRESSURE		83
			FULL CALIB.		83
			FULL PRESSURE		83
			SET LRV		86
			SET URV		86
			DAMPING VALUE		86
		BASIC SETUP	PRESS. ENG. UNIT	Level Standard LEVEL MODE = Linear, LIN. MEASURAND = **Mass** CALIBRATION MODE = **Dry**	77
			CUSTOMER UNIT P		78
			CUST. UNIT FACT. P		78
			PRESS. SENS. LOLIM		120
			PRESS. SENS. HILIM		120
			LEVEL MODE		78
			LIN. MEASURAND		79
			HEIGHT UNIT		85
			MASS UNIT		81
			CUSTOMER UNIT M		81
			CUST. UNIT FACT. M		82
			CALIBRATION MODE		82
			DENSITY UNIT		83
			ADJUST DENSITY		83
			UNIT VOLUME		84
			CUSTOMER UNIT V		84
			CUST. UNIT FACT. V		84
			TANK VOLUME		84
			TANK HEIGHT		85
			ZERO POSITION		86
			SET LRV		86
			SET URV		86
			DAMPING VALUE		86

Level 1	Level 2	Level 3	Level 4	Measuring mode, Level mode or Level selection	See page
		BASIC SETUP	PRESS. ENG. UNIT	Level Standard LEVEL MODE = Linear, LIN. MEASURAND = **Mass** CALIBRATION MODE = **Wet**	77
			CUSTOMER UNIT P		78
			CUST. UNIT FACT. P		78
			PRESS. SENS. LOLIM		120
			PRESS. SENS. HILIM		120
			LEVEL MODE		78
			LIN. MEASURAND		79
			MASS UNIT		81
			CUSTOMER UNIT M		81
			CUST. UNIT FACT. M		82
			CALIBRATION MODE		82
			EMPTY CALIB.		82
			EMPTY PRESSURE		83
			FULL CALIB.		83
			FULL PRESSURE		83
			SET LRV		86
			SET URV		86
			DAMPING VALUE		86
		BASIC SETUP	PRESS. ENG. UNIT	Level Standard LEVEL MODE = Pressure Linearized LIN. MEASURAND = **Pressure and %**	70
			CUSTOMER UNIT P		71
			CUST. UNIT FACT. P		71
			PRESS. SENS. LOLIM		120
			PRESS. SENS. HILIM		120
			LEVEL MODE		78
			LINd. MEASURAND		87
			HYDR. PRESS MIN.		89
			HYDR. PRESS MAX.		89
			DAMPING VALUE		89
		BASIC SETUP	PRESS. ENG. UNIT	Level Standard LEVEL MODE = Pressure Linearized LIN. MEASURAND = **Pressure and Volume**	70
			CUSTOMER UNIT P		71
			CUST. UNIT FACT. P		71
			PRESS. SENS. LOLIM		120
			PRESS. SENS. HILIM		120
			LEVEL MODE		78
			LINd. MEASURAND		87
			UNIT VOLUME		87
			CUSTOMER UNIT V		87
			CUST. UNIT FACT V		88
			HYDR. PRESS MIN.		89
			HYDR. PRESS MAX.		89
			DAMPING VALUE		89

Level 1	Level 2	Level 3	Level 4	Measuring mode, Level mode or Level selection	See page
		BASIC SETUP	PRESS. ENG. UNIT	Level Standard LEVEL MODE = Pressure Linearized LIN. MEASURAND = **Pressure and Mass**	70
			CUSTOMER UNIT P		71
			CUST. UNIT FACT. P		71
			PRESS. SENS. LOLIM		120
			PRESS. SENS. HILIM		120
			LEVEL MODE		78
			LINd. MEASURAND		87
			MASS UNIT		88
			CUSTOMER UNIT M		88
			CUST. UNIT FACT. M		89
			HYDR. PRESS MIN.		89
			HYDR. PRESS MAX.		89
			DAMPING VALUE		89
		BASIC SETUP	PRESS. ENG. UNIT	Level Standard LEVEL MODE = Height Linearized COMB. MEASURAND = **% Height and %** CALIBRATION MODE = **Dry**	74
			CUSTOMER UNIT P		74
			CUST. UNIT FACT. P		74
			PRESS. SENS. LOLIM		120
			PRESS. SENS. HILIM		120
			LEVEL MODE		78
			COMB. MEASURAND		90
			HEIGHT UNIT		95
			CUSTOMER UNIT H		95
			CUSTOMER UNIT H		95
			LEVEL MIN.		93
			LEVEL MAX.		93
			CALIBRATION MODE		93
			DENSITY UNIT		94
			ADJUST DENSITY		94
			100% POINT		96
			ZERO POSITION		96
			DAMPING VALUE		96
		BASIC SETUP	PRESS. ENG. UNIT	Level Standard LEVEL MODE = Height Linearized COMB. MEASURAND = **% Height and %** CALIBRATION MODE = **Wet**	74
			CUSTOMER UNIT P		74
			CUST. UNIT FACT. P		74
			PRESS. SENS. LOLIM		120
			PRESS. SENS. HILIM		120
			LEVEL MODE		78
			COMB. MEASURAND		90
			LEVEL MIN.		93
			LEVEL MAX.		93
			CALIBRATION MODE		93
			EMPTY CALIB.		93
			EMPTY PRESSURE		94

Level 1	Level 2	Level 3	Level 4	Measuring mode, Level mode or Level selection	See page
			FULL CALIB.		94
			FULL PRESSURE		94
			DAMPING VALUE		96
		BASIC SETUP	PRESS. ENG. UNIT	Level Standard LEVEL MODE = Height Linearized COMB. MEASURAND = **% Height and Volume** CALIBRATION MODE = **Dry**	74
			CUSTOMER UNIT P		74
			CUST. UNIT FACT. P		74
			PRESS. SENS. LOLIM		120
			PRESS. SENS. HILIM		120
			LEVEL MODE		78
			COMB. MEASURAND		90
			HEIGHT UNIT		95
			CUSTOMER UNIT H		95
			CUST. UNIT FACT. H		95
			UNIT VOLUME		91
			CUSTOMER UNIT V		91
			CUST. UNIT FACT. V		91
			LEVEL MIN.		93
			LEVEL MAX.		93
			CALIBRATION MODE		93
			DENSITY UNIT		94
			ADJUST DENSITY		94
			100% POINT		96
			ZERO POSITION		96
			DAMPING VALUE		96
		BASIC SETUP	PRESS. ENG. UNIT	Level Standard LEVEL MODE = Height Linearized COMB. MEASURAND = **% Height and Volume** CALIBRATION MODE = **Wet**	74
			CUSTOMER UNIT P		74
			CUST. UNIT FACT. P		74
			PRESS. SENS. LOLIM		120
			PRESS. SENS. HILIM		120
			LEVEL MODE		78
			COMB. MEASURAND		90
			UNIT VOLUME		91
			CUSTOMER UNIT V		91
			CUST. UNIT FACT. V		91
			LEVEL MIN.		93
			LEVEL MAX.		93
			CALIBRATION MODE		93
			EMPTY CALIB.		93
			EMPTY PRESSURE		94
			FULL CALIB.		94
			FULL PRESSURE		94
			DAMPING VALUE		96

Level 1	Level 2	Level 3	Level 4	Measuring mode, Level mode or Level selection	See page
		BASIC SETUP	PRESS. ENG. UNIT	Level Standard LEVEL MODE = Height Linearized COMB. MEASURAND = **% Height and Mass** CALIBRATION MODE = **Dry**	74
			CUSTOMER UNIT P		74
			CUST. UNIT FACT. P		74
			PRESS. SENS. LOLIM		120
			PRESS. SENS. HILIM		120
			LEVEL MODE		78
			COMB. MEASURAND		90
			HEIGHT UNIT		95
			CUSTOMER UNIT H		95
			CUST. UNIT FACT. H		95
			MASS UNIT		92
			CUSTOMER UNIT M		92
			CUST. UNIT FACT. M		92
			LEVEL MIN.		93
			LEVEL MAX.		93
			CALIBRATION MODE		93
			DENSITY UNIT		94
			ADJUST DENSITY		94
			100% POINT		96
			ZERO POSITION		96
			DAMPING VALUE		96
		BASIC SETUP	PRESS. ENG. UNIT	Level Standard LEVEL MODE = Height Linearized COMB. MEASURAND = **% Height and Mass** CALIBRATION MODE = **Wet**	74
			CUSTOMER UNIT P		74
			CUST. UNIT FACT. P		74
			PRESS. SENS. LOLIM		120
			PRESS. SENS. HILIM		120
			LEVEL MODE		78
			COMB. MEASURAND		90
			MASS UNIT		92
			CUSTOMER UNIT M		92
			CUST. UNIT FACT. M		92
			LEVEL MIN.		93
			LEVEL MAX.		93
			CALIBRATION MODE		93
			EMPTY CALIB.		93
			EMPTY PRESSURE		94
			FULL CALIB.		94
			FULL PRESSURE		94
			DAMPING VALUE		96

Level 1	Level 2	Level 3	Level 4	Measuring mode, Level mode or Level selection	See page
		BASIC SETUP	PRESS. ENG. UNIT	Level Standard LEVEL MODE = Height Linearized COMB. MEASURAND = **Height and Volume** CALIBRATION MODE = **Dry**	74
			CUSTOMER UNIT P		90
			CUST. UNIT FACT. P		90
			PRESS. SENS. LOLIM		120
			PRESS. SENS. HILIM		120
			LEVEL MODE		78
			COMB. MEASURAND		90
			HEIGHT UNIT		90
			CUSTOMER UNIT H		90
			CUST. UNIT FACT. H		90
			UNIT VOLUME		91
			CUSTOMER UNIT V		91
			CUST. UNIT FACT. V		91
			LEVEL MIN.		93
			LEVEL MAX.		93
			CALIBRATION MODE		93
			DENSITY UNIT		94
			ADJUST DENSITY		94
			ZERO POSITION		96
			DAMPING VALUE		96
		BASIC SETUP	PRESS. ENG. UNIT	Level Standard LEVEL MODE = Height Linearized COMB. MEASURAND = **Height and Volume** CALIBRATION MODE = **Wet**	74
			CUSTOMER UNIT P		90
			CUST. UNIT FACT. P		90
			PRESS. SENS. LOLIM		120
			PRESS. SENS. HILIM		120
			LEVEL MODE		78
			COMB. MEASURAND		90
			HEIGHT UNIT		90
			CUSTOMER UNIT H		90
			CUST. UNIT FACT. H		90
			UNIT VOLUME		91
			CUSTOMER UNIT V		91
			CUST. UNIT FACT. V		91
			LEVEL MIN.		93
			LEVEL MAX.		93
			CALIBRATION MODE		93
			EMPTY CALIB.		93
			EMPTY PRESSURE		94
			FULL CALIB.		94
			FULL PRESSURE		94
			ADJUST DENSITY		94
			DAMPING VALUE		96

Level 1	Level 2	Level 3	Level 4	Measuring mode, Level mode or Level selection	See page
		BASIC SETUP	PRESS. ENG. UNIT	Level Standard LEVEL MODE = Height Linearized COMB. MEASURAND = **Height and Mass** CALIBRATION MODE = **Dry**	74
			CUSTOMER UNIT P		90
			CUST. UNIT FACT. P		90
			PRESS. SENS. LOLIM		120
			PRESS. SENS. HILIM		120
			LEVEL MODE		78
			COMB. MEASURAND		90
			HEIGHT UNIT		90
			CUSTOMER UNIT H		90
			CUSTOMER UNIT H		90
			MASS UNIT		92
			CUSTOMER UNIT M		92
			CUST. UNIT FACT. M		92
			LEVEL MIN.		93
			LEVEL MAX.		93
			CALIBRATION MODE		93
			DENSITY UNIT		94
			ADJUST DENSITY		94
			ZERO POSITION		96
			DAMPING VALUE		96
		BASIC SETUP	PRESS. ENG. UNIT	Level Standard LEVEL MODE = Height Linearized COMB. MEASURAND = **Height and Mass** CALIBRATION MODE = **Wet**	74
			CUSTOMER UNIT P		90
			CUST. UNIT FACT. P		90
			PRESS. SENS. LOLIM		120
			PRESS. SENS. HILIM		120
			LEVEL MODE		78
			COMB. MEASURAND		90
			HEIGHT UNIT		90
			CUSTOMER UNIT H		90
			CUSTOMER UNIT H		90
			MASS UNIT		92
			CUSTOMER UNIT M		92
			CUST. UNIT FACT. M		92
			LEVEL MIN.		93
			LEVEL MAX.		93
			CALIBRATION MODE		93
			EMPTY CALIB.		93
			EMPTY PRESSURE		94
			FULL CALIB.		94
			FULL PRESSURE		94
			ADJUST DENSITY		94
			DAMPING VALUE		96

Level 1	Level 2	Level 3	Level 4	Measuring mode, Level mode or Level selection	See page
		BASIC SETUP	PRESS. ENG. UNIT	Level Standard LEVEL MODE = Height Linearized COMB. MEASURAND = **Height and %** CALIBRATION MODE = **Dry**	74
			CUSTOMER UNIT P		90
			CUST. UNIT FACT. P		90
			PRESS. SENS. LOLIM		120
			PRESS. SENS. HILIM		120
			LEVEL MODE		78
			COMB. MEASURAND		90
			HEIGHT UNIT		90
			CUSTOMER UNIT H		90
			CUSTOMER UNIT H		90
			LEVEL MIN		93
			LEVEL MAX		93
			CALIBRATION MODE		93
			DENSITY UNIT		94
			ADJUST DENSITY		94
			ZERO POSITION		96
			DAMPING VALUE		96
		BASIC SETUP	PRESS. ENG. UNIT	Level Standard LEVEL MODE = Height Linearized COMB. MEASURAND = **Height and %** CALIBRATION MODE = **Wet**	74
			CUSTOMER UNIT P		90
			CUST. UNIT FACT. P		90
			PRESS. SENS. LOLIM		120
			PRESS. SENS. HILIM		120
			LEVEL MODE		78
			COMB. MEASURAND		90
			HEIGHT UNIT		90
			CUSTOMER UNIT H		90
			CUSTOMER UNIT H		90
			LEVEL MIN.		93
			LEVEL MAX.		93
			CALIBRATION MODE		93
			EMPTY CALIB.		93
			EMPTY PRESSURE		94
			FULL CALIB.		94
			FULL PRESSURE		94
			ADJUST DENSITY		94
			DAMPING VALUE		96
		BASIC SETUP	PRESS. ENG. UNIT	Flow	97
			CUSTOMER UNIT P		97
			CUST. UNIT FACT. P		97
			PRESS. SENS. LOLIM		120
			PRESS. SENS. HILIM		120
			LINEAR/SQROOT		114
			MIN PRESS. FLOW		67

Level 1	Level 2	Level 3	Level 4	Measuring mode, Level mode or Level selection	See page
			MAX PRESS. FLOW		100
			FLOW-MEAS TYPE		98
			UNIT FLOW		98
			CUSTOMER UNIT F		99
			CUST. UNIT FACT. F		99
			MAX. DURCHFLUSS		100
			LOW FLOW CUT-OFF		103
			SET. L. FL. CUT-OFF		103
			DAMPING VALUE		100
		EXTENDED SETUP	TEMP. ENG. UNIT	Flow	100
			TEMP. ENG. UNIT	Level	101
			DENSITY UNIT	Level Standard	101
			ADJUST DENSITY		101
			PROCESS DENSITY		101
			SET LRV	Pressure Linearized, Height Linearized	102
			SET URV	Pressure Linearized, Height Linearized	102
			DENSITY UNIT	Level Easy Pressure	101
			ADJUST DENSITY		101
			PROCESS DENSITY		101
			ADJUST DENSITY	Level Easy Height	101
			DENSITY UNIT		101
			PROCESS DENSITY		101
			TEMP. ENG. UNIT	Flow	103
			SET LRV		103
			SET URV		104
		LINEARIZATION	TANK CONTENT MIN	Pressure Linearized, Height Linearized	107
			TANK CONTENT MAX		107
			TABLE SELECTION		107
			LIN. EDIT MODE		107
			EDITOR TABLE		108
			LINE-NUMB:		108
			X-VAL (Manual):		108
			X-VAL (Semiauto.):		108
			Y-VAL:		108
			ACTIV LIN.TAB.Y		109
			ACTIV LIN.TAB.X		109
			TANK DESCRIPTION		109
			TABLE ACTIVATE		109
		TOTALISER SETUP	TOTAL.1 ENG.UNIT	Flow	110
			TOT. 1 USER UNIT		110
			FACT.U.U.TOTAL.1		110

Level 1	Level 2	Level 3	Level 4	Measuring mode, Level mode or Level selection	See page
			NEG. FLOW TOT. 1		110
			RESET TOTALISER1		111
			TOTAL.2 ENG.UNIT		111
			TOT. 2 UNIT TEXT		111
			FACT.U.U.TOTAL.2		111
			NEG. FLOW TOT. 2		111
	SAFETY CONFIRM. See Safety Manual for Deltabar S (SD00189), Cerabar S (SD00190) or Deltapilot S (SD00213P).				
	DISPLAY	MAIN LINE CONT.		all	111
		LANGUAGE			62
		MAIN DATA FORMAT			112
		ALTERNATE DATA			112
		DISPLAY CONTRAST			112
		DIGITS SET			112
	OUTPUT	OUTPUT CURRENT		all	112
		CURRENT CHARACT.			113
		OUTPUT FAIL MODE			113
		ALT.CURR.OUTPUT			114
		SET MAX. ALARM			114
		SET MIN. CURRENT			114
		LINEAR/SQROOT		Pressure and Flow	114
		ASSIGN CURRENT		Height Linearized	114
	TRANSMITTER DATA	**HART DATA**	HART VERSION	all	114
			CURRENT MODE		115
			BUS ADDRESS		115
			DEVICE TYPE		115
			DEVICE REVISION		115
			BURST MODE		115
			BURST OPTION		115
			PREAMBLE NUMBER		116
			MANUFACTOR ID		116
			MESSAGE		116
			HART DATE		116
			HART PRIMARY VALUE IS		116
			PRIMARY VALUE		116
			SECONDARY VAL.IS		116
			SECONDARY VALUE		116
			THIRD VALUE IS		116
			THIRD VALUE		116
			4TH VALUE IS		117
			4TH VALUE		117
		TRANSMITTER DATA	DEVICE SERIAL No	all	117
			ELECTR.SERIAL No		117

Level 1	Level 2	Level 3	Level 4	Measuring mode, Level mode or Level selection	See page
			CUST. TAG NUMBER		117
			LONG TAG NUMBER		117
			ADDITIONAL INFO.		117
			DEVICE DESIGN.		117
			HARDWARE REV.		117
			SOFTWARE VERSION		117
			CONFIG RECORDER		117
			PCB TEMPERATURE		117
			Allowed Min.TEMP		117
			Allowed Max.TEMP		117
			DIP STATUS		118
		PROCESS CONNECTION	Pmax PROC. CONN.	all	118
			PROC.CONN.TYPE		118
			MAT.PROC.CONN. +		118
			MAT.PROC.CONN. -		118
			SEAL TYPE		119
			BOLTS MATERIAL		119
			NUTS MATERIAL		119
			DRAIN VENT MAT.		119
			DRAIN VENT POS.		119
			THREAD PROCESS		119
			MOUNTING THREAD		119
			REMOTE SEAL +		119
			REMOTE SEAL -		119
			DIAPHRAG.MAT. +		119
			DIAPHRAG.MAT. -		119
			NR OF CHEM SEAL		120
			FILL FLUID		120
		SENSOR DATA	SENSOR SER. No.	all	120
			PRESS.SENS LOLIM		120
			PRESS.SENS HILIM		120
			MINIMUM SPAN		120
			SENSOR MEAS.TYPE		120
			MAT. MEMBRANE		120
			FILLING FLUID		120
			Tmin SENSOR		120
			Tmax SENSOR		120
			SENS H/WARE REV		120
	PROCESS INFO	PROCESS VALUES	MEASURED VALUE	Pressure	121
			PRESSURE		121
			CORRECTED PRESS.		121
			SENSOR PRESSURE		121
			SENSOR TEMP.		121

Level 1	Level 2	Level 3	Level 4	Measuring mode, Level mode or Level selection	See page
			MEAS. VAL. TREND		121
			MEASURED VALUE	Level	122
			PRESSURE		122
			CORRECTED PRESS.		122
			SENSOR PRESSURE		122
			SENSOR TEMP.		122
			MEAS. VAL. TREND		122
			LEVEL BEFORE LIN		122
			TANK CONTENT	Pressure Linearized, Height Linearized	122
			MEASURED VALUE	Flow	122
			PRESSURE		123
			CORRECTED PRESS.		123
			SENSOR PRESSURE		123
			SENSOR TEMP.		123
			MEAS. VAL. TREND		123
			SUPPRESSED FLOW		123
			TOTALIZER 1		123
			TOTAL.1 OVERFLOW		123
			TOTALIZER 2		123
			TOTAL.2 OVERFLOW		123
		PEAK HOLD INDIC.	COUNTER:P > Pmax	all	123
			COUNTER:P < Pmin		123
			MAX. MEAS.PRESS.		123
			MIN. MEAS.PRESS.		123
			COUNTER:T > Tmax		124
			COUNTER:T < Tmin		124
			MAX. MEAS.TEMP.		124
			MIN. MEAS.TEMP.		124
			PCB COUNT:T>Tmax		124
			PCB COUNT:T<Tmin		124
			PCB MAX. TEMP.		124
			PCB MIN. TEMP.		124
			RESET PEAKHOLD		124
	OPERATION	ENTER RESET CODE		all	124
		OPERATING HOURS			124
		INSERT PIN No			125
		HistoROM AVAIL.			125
		DOWNLOAD SELECT.			125
		HistoROM CONTROL			125
	DIAGNOSTICS	**SIMULATION**	SIMULATION MODE	all	126
			SIM. PRESSURE		126
			SIM.FLOW VALUE		126

Level 1	Level 2	Level 3	Level 4	Measuring mode, Level mode or Level selection	See page
			SIM. LEVEL		126
			SIM. TANK CONT.		126
			SIM. CURRENT		126
			SIM. ERROR NO.		127
		MESSAGES	ALARM STATUS	all	127
			LAST DIAG. CODE		127
			ACK. ALARM MODE		127
			ACK. ALARM		127
			RESET ALL ALARMS		128
			ERROR No.		128
			SELECT ALARMTYPE (Overview alarms)		128 (131)
			ALARM DELAY		128
			ALARM DISPL.TIME		128
		USER LIMITS	PminALARM WINDOW	all	129
			PmaxALARM WINDOW		129
			TminALARM WINDOW		129
			TmaxALARM WINDOW		129
	SERVICE	**System2**	CURR. TRIM 4mA	all	129
			CURR. TRIM 20mA		130
			OFFSET 4mA TRIM		130
			OFFSET 20mA TRIM		130

9 Description of parameters

- The following tables list all the parameters as per the menu structure of the on-site display. Each table corresponds to a function group in the menu tree.
- The menu structure for on-site operation and the digital communication are different.
- In the operating program or HART handheld terminal, additional parameters are displayed. These parameters are marked accordingly.
- The menu path of the on-site display is indicated in the header of each table. You can use this path to get to the parameters in question.
- The menu has a different structure depending on the measuring mode selected. This means that some function groups are only displayed for one measuring mode, e.g. the "LINEARISATION" function group for the "Level" measuring mode. If certain requirements have to be met for a function group, these are listed in the first row of the table.
- Some parameters are only displayed if other parameters are appropriately configured. For example, the EMPTY CALIB. parameter is not displayed in the Quick Setup menu ("Level" measuring mode) unless the "Linear" option was selected for the LEVEL MODE parameter and the "Wet" option was selected for the CALIBRATION MODE parameter. There is a comment in the parameter description here stating: Note: prerequisite: LEVEL MODE = Linear and CALIBRATION MODE = Wet.
- Parameter names are written in upper case in the text.
- In the "Parameter name" column, the unique identification number (ID) of the parameter is indicated in brackets. This ID only appears on the on-site display.

Table 1: GROUP SELECTION → LANGUAGE – on-site operation

Parameter name	Description
LANGUAGE (079) Selection	Select the menu language for the on-site display. ▪ In the operating program and in the HART handheld terminal, the LANGUAGE parameter is arranged in the DISPLAY function group. ▪ Select the menu language for FieldCare via the "Extras" menu → "Options" → "Display" tab → "Tool language" area. **Factory setting:** English

Table 2: GROUP SELECTION → MEASURING MODE – on-site operation

Parameter name	Description
MEASURING MODE (389) Selection	Select the measuring mode. The operating menu is structured according to the selected measuring mode. **⚠ WARNING** **Changing the measuring mode can affect the adjustment data!** This situation can result in product overflow. ▶ Check calibration data when the measuring mode is changed. **Options:** ▪ Pressure ▪ Level ▪ Deltabar S: Flow **Factory setting:** ▪ Cerabar S and Deltabar S: Pressure ▪ Deltapilot S: Level

Table 2: GROUP SELECTION → MEASURING MODE – on-site operation	
Parameter name	**Description**
LEVEL SELECTION (020) Options	Select level mode. **Prerequisite:** ▪ MEASURING MODE = Level ▪ In the "Level Easy Pressure" and "Level Easy Height" level modes, the values entered are not tested as extensively as in the "Level Standard" level mode. The values entered for EMPTY CALIB./FULL CALIB., EMPTY PRESSURE/FULL PRESSURE, EMPTY HEIGHT/FULL HEIGHT and SET LRV/SET URV must have a minimum interval of 1% for the "Level Easy Pressure" and "Level Easy Height" level modes. The value will be rejected with a warning message if the values are too close together. Further limit values are not checked; i.e. the values entered must be appropriate for the sensor and the measuring task so that the measuring device can measure correctly. → For an overview of the different level modes and types, see Page 8, Section 5.1 "Overview of level measurement". ▪ The "Level Easy Pressure" and "Level Easy Height" level modes encompass fewer parameters than the "Level Standard" mode and are used for quick and easy configuration of a level application. ▪ Customer-specific units of fill level, volume and mass or a linearization table may only be entered in the "Level Standard" level mode. ▪ Where the device is intended for use as a subsystem in a safety function (SIL), a "Device configuration with enhanced parameter security" (SAFETY CONFIRM.) is only possible for the "Level" operating mode in the "Level Easy Pressure" level mode. All parameters previously entered are checked after a password is entered. Once the "Level Easy Height" or "Level Standard" has been selected, the configuration will first have to be reset to the ex-works setting using the RESET parameter (menu path: (GROUP SELECTION →) OPERATING MENU → OPERATION) using the reset code "7864". → For additional information, see the Safety Manual for Deltabar S (SD00189), Cerabar S (SD00190) or Deltapilot S (SD00213P). **Options:** ▪ Level Easy Pressure Specify two pressure-level value pairs for this level mode. The pressure measured value is converted directly to the unit which is selected via the OUTPUT UNIT parameter (→ Page 71). Two calibration modes, "Wet" and "Dry", are available. – Wet calibration takes place by filling and emptying the container. In the case of two different levels, the level, volume, mass or percentage value entered is assigned to the pressure measured at this point in time. – Dry calibration is a theoretical calibration. For this calibration, specify two pressure-level value pairs via the EMPTY CALIB., EMPTY PRESSURE, FULL CALIB. and FULL PRESSURE parameters. → Parameter descriptions see Page 72 ff. ▪ Level Easy Height For this level mode, specify a height unit, density and two height-level value pairs. The pressure measured value is converted to a height value using the density entered and the height unit. Two calibration modes, "Wet" and "Dry", are available. – Wet calibration takes place by filling and emptying the container. In the case of two different levels, the level, volume, mass or percentage value entered is assigned to the converted height value. – Dry calibration is a theoretical calibration. For this calibration, specify two height-level value pairs via the EMPTY CALIB., EMPTY HEIGHT, FULL CALIB. and FULL HEIGHT parameters. → Parameter descriptions see Page 76 ff. ▪ Level standard Once you have selected this level mode, you can use the LEVEL MODE parameter (→ Page 78) to choose between "Linear", "Pressure Linearized" and "Height Linearized". **Factory setting:** Level Easy Pressure
→ For LEVEL SELECTION = "Level Easy Pressure" see Page 70, Table 8. → For LEVEL SELECTION = "Level Easy Height" see Page 73, Table 9. → For LEVEL SELECTION = "Level standard" see Page 77, Table 10.	

Table 3: (GROUP SELECTION →) QUICK SETUP "Pressure"	
Parameter name	**Description**
This menu displays the most important parameters for the "Pressure" measuring mode. **Prerequisite:** ▪ MEASURING MODE = Pressure	
POS. ZERO ADJUST (685) Entry	Position adjustment – the pressure difference between zero (set point) and the measured pressure need not be known. Due to the orientation of the device, there may be a shift in the measured value, i.e. for example, when the container is empty, the MEASURED VALUE parameter does not display zero. **Example:** – MEASURED VALUE = 2.2 mbar (0.033 psi) – Correct the MEASURED VALUE via the POS. ZERO ADJUST parameter with the "Confirm" option. This means that you are assigning the value 0.0 to the pressure present. – MEASURED VALUE (after pos. zero adjust) = 0.0 mbar – The current value is also corrected. The CALIB. OFFSET parameter displays the resulting pressure difference (offset) by which the MEASURED VALUE was corrected. **Prerequisite:** ▪ This parameter is displayed for Deltabar S, Cerabar S with gauge pressure sensor and Deltapilot S. **Options:** ▪ Abort ▪ Confirm **Factory setting:** Abort
POS. INPUT VALUE (563) Entry	Position adjustment – the pressure difference between zero (set point) and the measured pressure need not be known. To correct the pressure difference, you need a reference measurement value (e. g. from a reference device). Due to the orientation of the device, there may be a shift in the measured value, i.e. for example, when the container is empty, the MEASURED VALUE parameter does not display zero or the desired value. **Example:** – MEASURED VALUE = 0.5 mbar (0.0075 psi) – For the POS. INPUT VALUE parameter, specify the desired set point for the MEASURED VALUE, e.g. 2 mbar. (MEASURED $VALUE_{new}$ = POS. INPUT VALUE) – MEASURED VALUE (after entry for POS. INPUT VALUE) = 2.0 mbar (0.03 psi) – The CALIB. OFFSET parameter displays the resulting pressure difference (offset) by which the MEASURED VALUE was corrected. CALIB. OFFSET = MEASURED $VALUE_{old}$ – POS. INPUT VALUE, here: CALIB. OFFSET = 0.5 mbar (0.0075 psi) – 2.0 mbar (0.03 psi) = – 1.5 mbar (0.0225 psi)) – The current value is also corrected. **Prerequisite:** ▪ This parameter is displayed for Cerabar S with absolute pressure sensors. **Factory setting:** 0.0
SET LRV (245) Entry	Set lower range value – without reference pressure. Enter pressure value for the lower current value (4 mA). **Factory setting:** 0.0 or as per order specifications
SET URV (246) Entry	Set upper range value – without reference pressure. Enter pressure value for the upper current value (20 mA). **Factory setting:** High sensor limit (→ see PRESS. SENS HILIM, Page 120) or as per order specifications

Table 3: (GROUP SELECTION →) QUICK SETUP "Pressure"	
Parameter name	**Description**
DAMPING VALUE (247) Entry	Enter damping time (time constant τ). The damping affects the speed at which all subsequent elements, such as the on-site display, measured value and current output react to a change in the pressure. **Input range:** 0.0...999.0 s **Factory setting:** 2.0 s or as per order specifications

Table 4: (GROUP SELECTION →) QUICK SETUP "Level"	
Parameter name	**Description**
This menu displays the most important parameters for the "Level" measuring mode. **Prerequisite**: ▪ MEASURING MODE = Level	
POS. ZERO ADJUST (685) Entry	Position adjustment – the pressure difference between zero (set point) and the measured pressure need not be known. Due to the orientation of the device, there may be a shift in the measured value, i.e. when the container is empty, the MEASURED VALUE parameter does not display zero. **Example:** – MEASURED VALUE = 2.2 mbar (0.033 psi) – Correct the MEASURED VALUE via the POS. ZERO ADJUST parameter with the "Confirm" option. This means that you are assigning the value 0.0 to the pressure present. – MEASURED VALUE (after pos. zero adjust) = 0.0 mbar – The current value is also corrected. The CALIB. OFFSET parameter displays the resulting pressure difference (offset) by which the MEASURED VALUE was corrected. **Prerequisite:** ▪ This parameter is displayed for Deltabar S, Cerabar S with gauge pressure sensor and Deltapilot S. **Options:** ▪ Abort ▪ Confirm **Factory setting:** 0.0
POS. INPUT VALUE (563) Entry	Position adjustment – the pressure difference between zero (set point) and the measured pressure need not be known. To correct the pressure difference, you need a reference measurement value (e. g. from a reference device). Due to the orientation of the device, there may be a shift in the measured value, i.e. when the container is empty, the MEASURED VALUE parameter does not display zero or the desired value. **Example:** – MEASURED VALUE = 0.5 mbar (0.0075 psi) – For the POS. INPUT VALUE parameter, specify the desired set point for the MEASURED VALUE, e.g. 2.0 mbar (0.03 psi). (MEASURED VALUE $_{new}$ = POS. INPUT VALUE) – MEASURED VALUE (after entry for POS. INPUT VALUE) = 2.0 mbar (0.03 psi) – The CALIB. OFFSET parameter displays the resulting pressure difference (offset) by which the MEASURED VALUE was corrected. CALIB. OFFSET = MEASURED VALUE$_{old}$ – POS. INPUT VALUE, here: CALIB. OFFSET = 0.5 mbar (0.0075 psi) – 2.0 mbar (0.03 psi) = – 1.5 mbar (0.0225 psi)) – The current value is also corrected. **Prerequisite:** ▪ This parameter is displayed for Cerabar S with absolute pressure sensors. **Factory setting:** 0.0

Table 4: (GROUP SELECTION →) QUICK SETUP "Level"	
Parameter name	**Description**
EMPTY CALIB. (314)/ (010) Entry	Enter level value for the lower calibration point (container empty). The container is either empty or part full. By entering a value for this parameter, you are assigning a level value to the pressure present at the device. **Prerequisite:** ▪ LEVEL SELECTION = Level Easy Pressure (→ see also Page 63), CALIBRATION MODE = Wet (→ see also Page 72) ▪ LEVEL SELECTION = Level Standard (→ see also Page), LEVEL MODE = Linear (→ see also Page 78), CALIBRATION MODE = Wet (→ see also Page 82) For this parameter, the on-site display shows the level value to be entered and the pressure present at the device. In order for the level value to be saved together with the pressure present at the device, the entry field for the level value must first be activated using the ⊞ or ⊟ key before confirming with the Ⓔ key. This applies also if the level value is to remain unchanged. **Factory setting:** 0.0
FULL CALIB. (315)/(004) Entry	Enter level value for the upper calibration point (container full). The container is either completely or almost full. By entering a value for this parameter, you are assigning a level value to the pressure present at the device. **Prerequisite:** ▪ LEVEL SELECTION = Level Easy Pressure (→ see also Page 63), CALIBRATION MODE = Wet (→ see also Page 72) ▪ LEVEL SELECTION = Level Standard, LEVEL MODE = Linear (→ see also Page 78), CALIBRATION MODE = Wet (→ see also Page 82) For this parameter, the on-site display shows the level value to be entered and the pressure present at the device. In order for the level value to be saved together with the pressure present at the device, the entry field for the level value must first be activated using the ⊞ or ⊟ key before confirming with the Ⓔ key. This applies also if the level value is to remain unchanged. **Factory setting:** 100.0
DAMPING VALUE (247) Entry	Enter damping time (time constant τ). The damping affects the speed at which all subsequent elements, such as the on-site display, measured value and current output react to a change in the pressure. **Input range:** 0.0...999.0 s **Factory setting:** 2.0 s or as per order specifications

Table 5: (GROUP SELECTION →) QUICK SETUP "Flow"	
Parameter name	**Description**
This menu displays the most important parameters for the "Flow" measuring mode. **Prerequisite**: ▪ Deltabar S differential pressure transmitter ▪ MEASURING MODE = Flow	

Table 5: (GROUP SELECTION →) QUICK SETUP "Flow"	
Parameter name	**Description**
POS. ZERO ADJUST (685) Entry	Position adjustment – the pressure difference between zero (set point) and the measured pressure need not be known. (A reference pressure is present at the device.) Due to the orientation of the device, there may be a shift in the measured value, i.e. when the container is empty, the MEASURED VALUE parameter does not display zero. **Example:** – MEASURED VALUE = 2.2 mbar (0,033 psi) – Correct the MEASURED VALUE via the POS. ZERO ADJUST parameter with the "Confirm" option. This means that you are assigning the value 0.0 to the pressure present. – MEASURED VALUE (after pos. zero adjust) = 0.0 mbar – The current value is also corrected. The CALIB. OFFSET parameter displays the resulting pressure difference (offset) by which the MEASURED VALUE was corrected. **Selection:** ▪ Abort ▪ Confirm **Factory setting:** 0.0
MAX. FLOW (311) Entry	Enter maximum flow of primary element. See also layout sheet of primary element. The maximum flow is assigned to the maximum pressure which you enter via MAX PRESS. FLOW. Use the LINEAR/SQROOT parameter (→ Page 114) to specify the current signal for the "Flow" measuring mode. The following applies for the "Flow (square root)" setting: If you enter a new value for MAX. FLOW, the value for SET URV is also changed. Use SET URV to assign a flow to the upper current value. If you want to assign the upper current value a value other than that for MAX. FLOW, you must enter the desired value for SET URV. (→ SET URV, Page 104). **Factory setting:** 1.0
MAX PRESS. FLOW (634) Entry	Enter maximum pressure of primary element. → See layout sheet of primary element. This value is assigned to the maximum flow value (→ see MAX. FLOW). Use the LINEAR/SQROOT parameter (→ Page 114) to specify the current signal for the "Flow" measuring mode. The following applies for the "Differential pres." setting: If you enter a new value for MAX PRESS. FLOW, the value for SET URV is also changed. Use SET URV to assign a pressure value to the upper current value. If you want to assign the upper current value a value other than that for MAX PRESS. FLOW, you must enter the desired value for SET URV. (→ SET URV, Page 104). **Factory setting:** High sensor limit (→ See PRESS. SENS HILIM, Page 120)
MIN. PRESS. FLOW Display	Display of the pressure value at minimum flow rate (= 0). **Factory setting:** 0 **Prerequisite:** Digital communication
DAMPING VALUE (247) Entry	Enter damping time (time constant τ). The damping affects the speed at which all subsequent elements, such as the on-site display, measured value and current output react to a change in the pressure. **Input range:** 0.0...999.0 s **Factory setting:** 2.0 s or as per order specifications

Table 6: (GROUP SELECTION →) OPERATING MENU → SETTINGS → POSITION ADJUSTMENT	
Parameter name	**Description**
Due to the orientation of the device, there may be a shift in the measured value, i.e. when the container is empty, the measured value does not display zero. Deltabar S and Cerabar S offer three different ways of performing a position adjustment. Recommendation: ▪ The pressure difference between zero (set point) and the measured pressure need not be known. – POS. ZERO ADJUST: Deltabar S or Cerabar S with gauge pressure sensor or Deltapilot S. – POS. INPUT VALUE: Cerabar S with absolute pressure sensor. ▪ The pressure difference between zero (set point) and the measured pressure is known. – CALIB. OFFSET: Deltabar S, Cerabar S with gauge pressure sensor, Cerabar S with absolute pressure sensor or Deltapilot S.	
POS. ZERO ADJUST (685) Entry	Position adjustment – the pressure difference between zero (set point) and the measured pressure need not be known. **Example:** – MEASURED VALUE = 2.2 mbar (0.033 psi) – Correct the MEASURED VALUE via the POS. ZERO ADJUST parameter with the "Confirm" option. This means that you are assigning the value 0.0 to the pressure present. – MEASURED VALUE (after pos. zero adjust) = 0.0 mbar – The current value is also corrected. The CALIB. OFFSET parameter displays the resulting pressure difference (offset) by which the MEASURED VALUE was corrected. **Selection:** ▪ Abort ▪ Confirm **Factory setting:** 0.0
POS. INPUT VALUE (563) Entry	Position adjustment – the pressure difference between zero (set point) and the measured pressure need not be known. To correct the pressure difference, you need a reference measurement value (e. g. from a reference device). **Example:** – MEASURED VALUE = 0.5 mbar (0.0075 psi) – For the POS. INPUT VALUE parameter, specify the desired set point for the MEASURED VALUE, e.g. 2.0 mbar (0.03 psi). (MEASURED $VALUE_{new}$ = POS. INPUT VALUE) – MEASURED VALUE (after entry for POS. INPUT VALUE) = 2.0 mbar (0.03 psi) – The CALIB. OFFSET parameter displays the resulting pressure difference (offset) by which the MEASURED VALUE was corrected. CALIB. OFFSET = MEASURED $VALUE_{old}$ – POS. INPUT VALUE, here: CALIB. OFFSET = 0.5 mbar (0.0075 psi) – 2.0 mbar (0.03 psi) = – 1.5 mbar (0.0225 psi)) – The current value is also corrected. **Factory setting:** 0.0
CALIB. OFFSET (319) Entry	Position adjustment - the pressure difference between zero (set point) and the measured pressure is known. **Example:** – MEASURED VALUE = 2.2 mbar (0.033 psi) – Via the CALIB. OFFSET parameter, enter the value by which the MEASURED VALUE should be corrected. To correct the MEASURED VALUE to 0.0 mbar, you must enter the value 2.2 here. (MEASURED $VALUE_{new}$ = MEASURED $VALUE_{old}$ – CALIB. OFFSET) – MEASURED VALUE (after entry for calib. offset) = 0.0 mbar – The current value is also corrected. **Factory setting:** 0.0

Table 7: (GROUP SELECTION →) OPERATING MENU → SETTINGS → BASIC SETUP "Pressure"	
Parameter name	**Description**
Prerequisite: ▪ MEASURING MODE = Pressure	
PRESS. ENG. UNIT (060) Selection	Select pressure unit. If a new pressure unit is selected, all pressure-specific parameters are converted and displayed with the new unit. **Options:** ▪ mbar, bar ▪ mmH2O, mH2O, inH2O, ftH2O 1) ▪ Pa, hPa, kPa, MPa ▪ psi ▪ mmHg, inHg 2) ▪ Torr ▪ g/cm^2, kg/cm^2 ▪ lb/ft^2 ▪ atm ▪ gf/cm^2, kgf/cm^2 ▪ User unit, → See also the following parameter description for CUSTOMER UNIT P and CUST. UNIT FACT. P. 1) The conversion factor of the pressure units refers to a reference temperature of 4 °C (39.2 °F). 2) The conversion factor of the pressure units refers to a reference temperature of 0 °C (32 °F). **Factory setting:** Depends on the sensor nominal measuring range mbar or bar or as per order specifications
CUSTOMER UNIT P (075) Entry	Enter text (unit) for customer-specific pressure unit. You can enter a maximum of eight alphanumeric characters here. → See also CUST. UNIT FACT. P. **Prerequisite:** ▪ PRESS. ENG. UNIT = User unit Only the first five characters are shown on the on-site display. For example, if "crates" is specified as the customer-specific unit, "crate" is displayed. If the unit contains a slash, up to eight characters can be shown on the on-site display. The maximum number of characters in the counter is again limited to five. For example, if "crates/m2" is specified as the customer-specific unit, "crate/m2" is displayed. In the FieldCare, all eight characters are displayed. In the HART handheld terminal, the customer-specific unit is only displayed in the CUSTOMER UNIT P parameter. The measured value is displayed with the additional text "User Unit". **Factory setting:** _ _ _ _ _ _ _ _
CUST. UNIT FACT. P (317) Entry	Enter conversion factor for a customer-specific pressure unit. The conversion factor must be entered in relation to the SI unit "Pa". → See also CUSTOMER UNIT P. **Prerequisite:** ▪ PRESS. ENG. UNIT = User unit **Example:** – You want the measured value to be displayed in "PU" (PU: packing unit). – MEASURED VALUE =10000 Pa ≙ 1 PU – Entry CUSTOMER UNIT P: PU – Entry CUST. UNIT FACT. P: 0.0001 – Result: MEASURED VALUE = 1 PU **Factory setting:** 1.0
SET LRV (245) Entry	Set lower range value – without reference pressure. Enter pressure value for the lower current value (4 mA). **Factory setting:** 0.0 or as per order specifications

Table 7: (GROUP SELECTION →) OPERATING MENU → SETTINGS → BASIC SETUP "Pressure"	
Parameter name	**Description**
SET URV (246) Entry	Set upper range value – without reference pressure. Enter pressure value for the upper current value (20 mA). **Factory setting:** High sensor limit (→ See PRESS. SENS HILIM, Page 120)
GET LRV (309) Entry	Set lower range value – reference pressure is present at device. The pressure for the lower current value (4 mA) is present at device. With the "Confirm" option, you assign the lower current value to the pressure value present. On-site display: the pressure value present is displayed in the bottom line. **Options:** ▪ Abort ▪ Confirm
GET URV (310) Entry	Set upper range value – reference pressure is present at device. The pressure for the upper current value (20 mA) is present at device. With the "Confirm" option, you assign the upper current value to the pressure value present. On-site display: the pressure value present is displayed in the bottom line. **Options:** ▪ Abort ▪ Confirm
DAMPING VALUE (247) Entry	Enter damping time (time constant τ). The damping affects the speed at which all subsequent elements, such as the on-site display, measured value and current output react to a change in the pressure. **Input range:** 0.0...999.0 s **Factory setting:** 2.0 s or as per order specifications

Table 8: (GROUP SELECTION→) OPERATING MENU → SETTINGS → BASIC SETUP "Level", LEVEL SELECTION "Level Easy Pressure"	
The following parameters are displayed if you have selected the "Level Easy Pressure" option for the LEVEL SELECTION parameter. Specify two pressure-level value pairs for this level mode. Two calibration modes, "Wet" and "Dry", are available. **Prerequisite**: ▪ MEASURING MODE = Level ▪ LEVEL SELECTION = Level Easy Pressure	
PRESS. ENG. UNIT (060) Selection	Select pressure unit. If a new pressure unit is selected, all pressure-specific parameters are converted and displayed with the new unit. **Options:** ▪ mbar, bar ▪ mmH2O, mH2O, inH2O, ftH2O 1) ▪ Pa, hPa, kPa, MPa ▪ psi ▪ mmHg, inHg 2) ▪ Torr ▪ g/cm^2, kg/cm^2 ▪ lb/ft^2 ▪ atm ▪ gf/cm^2, kgf/cm^2 ▪ User unit, → See also the following parameter description for CUSTOMER UNIT P and CUST. UNIT FACT. P. 1) The conversion factor of the pressure units refers to a reference temperature of 4 °C (39.2 °F). 2) The conversion factor of the pressure units refers to a reference temperature of 0 °C (32 °F). **Factory setting:** Depends on the sensor nominal measuring range mbar or bar or as per order specifications

Table 8: (GROUP SELECTION→) OPERATING MENU → SETTINGS → BASIC SETUP "Level", LEVEL SELECTION "Level Easy Pressure"	
CUSTOMER UNIT P (075) Entry	Enter text (unit) for customer-specific pressure unit. You can enter a maximum of eight alphanumeric characters here. → See also CUST. UNIT FACT. P. **Prerequisite:** ▪ PRESS. ENG. UNIT = User unit Only the first five characters are shown on the on-site display. For example, if "crates" is specified as the customer-specific unit, "crate" is displayed. If the unit contains a slash, up to eight characters can be shown on the on-site display. The maximum number of characters in the counter is again limited to five. For example, if "crates/m2" is specified as the customer-specific unit, "crate/m2" is displayed. In the FieldCare, all eight characters are displayed. In the HART handheld terminal, the customer-specific unit is only displayed in the CUSTOMER UNIT P parameter. The measured value is displayed with the additional text "User Unit". **Factory setting:** – – – – – – – –
CUST. UNIT FACT. P (317) Entry	Enter conversion factor for a customer-specific pressure unit. The conversion factor must be entered in relation to the SI unit "Pa". → See also CUSTOMER UNIT P. **Prerequisite:** ▪ PRESS. ENG. UNIT = User unit **Example:** – You want the measured value to be displayed in "PU" (PU: packing unit). – MEASURED VALUE =10000 Pa ≙ 1 PU – Entry CUSTOMER UNIT P: PU – Entry CUST. UNIT FACT. P: 0.0001 – Result: MEASURED VALUE = 1 PU **Factory setting:** 1.0
OUTPUT UNIT (023) Selection	Select unit for measured value display and MEASURED VALUE parameter (→ Page 121). The selected unit is used only to describe the measured value. This means that when selecting a new output unit, the measured value is not converted. Example: ▪ current measured value: 0.3 ft ▪ new output unit: m ▪ new measured value: 0.3 m (0.98 ft) **Options** ▪ % ▪ mm, cm, dm, m ▪ ft, inch ▪ cm^3, dm^3, m^3,m^3 E^3 ▪ l, hl ▪ ft^3, ft^3 E^3 ▪ gal, bbl, Igal ▪ g, kg, t ▪ lb, ton, oz **Factory setting:** %

Table 8: (GROUP SELECTION→) OPERATING MENU → SETTINGS → BASIC SETUP "Level", LEVEL SELECTION "Level Easy Pressure"	
CALIBRATION MODE (008) Selection	Select calibration mode. **Options:** ▪ Wet Wet calibration takes place by filling and emptying the container. In the case of two different levels, the level, volume, mass or percentage value entered is assigned to the pressure measured at this point in time. (→ See also this table, parameter descriptions for EMPTY CALIB. and FULL CALIB.) ▪ Dry Dry calibration is a theoretical calibration. For this calibration, specify two pressure-level value pairs via the following parameters: EMPTY CALIB., EMPTY PRESSURE, FULL CALIB. and FULL PRESSURE. **Factory setting:** Wet
EMPTY CALIB. (010) Entry	Enter level, volume, mass or percentage value for the lower calibration point (container empty). The container is either empty or part full. By entering a value for this parameter, you assign a level, volume, mass or percentage value to the pressure present at the device. The unit is selected via the OUTPUT UNIT parameter (→ Page 71). **Prerequisite:** ▪ CALIBRATION MODE = Wet For this parameter, the on-site display shows the level value to be entered and the pressure present at the device. In order for the level value to be saved together with the pressure present at the device, the entry field for the level value must first be activated using the ⊞ or ⊟ key before confirming with the Ⓔ key. This applies also if the level value is to remain unchanged. **Factory setting:** 0.0
FULL CALIB. (004) Entry	Enter height, volume or mass value for the upper calibration point (container full). The container is either completely or almost full. By entering a value for this parameter, you assign a height, volume or mass value to the pressure present at the device. The unit is selected via the OUTPUT UNIT parameter (→ Page 71). **Prerequisite:** ▪ CALIBRATION MODE = Wet For this parameter, the on-site display shows the level value to be entered and the pressure present at the device. In order for the level value to be saved together with the pressure present at the device, the entry field for the level value must first be activated using the ⊞ or ⊟ key before confirming with the Ⓔ key. This applies also if the level value is to remain unchanged. **Factory setting:** 100.0
EMPTY CALIB. (010) Entry	Enter level, volume, mass or percentage value for the lower calibration point (container empty). The values entered for the EMPTY CALIB. and EMPTY PRESSURE parameters form the pressure-level value pair for the lower calibration point. The unit is selected via the OUTPUT UNIT parameter (→ Page 71). **Prerequisite:** ▪ CALIBRATION MODE = Dry **Factory setting:** 0.0
EMPTY PRESSURE (011) Entry	Enter pressure value for the lower calibration point (container empty). → See also EMPTY CALIB. **Prerequisite:** ▪ CALIBRATION MODE = Dry **Factory setting:** 0.0

Table 8: (GROUP SELECTION→) OPERATING MENU → SETTINGS → BASIC SETUP "Level", LEVEL SELECTION "Level Easy Pressure"	
FULL CALIB. (004) Entry	Enter height, volume, mass or percentage value for the upper calibration point (container full). The values entered for the FULL CALIB. and FULL PRESSURE parameters form the pressure-level value pair for the upper calibration point. The unit is selected via the OUTPUT UNIT parameter (→ Page 71). **Prerequisite:** ▪ CALIBRATION MODE = Dry **Factory setting:** 100.0
FULL PRESSURE (005) Entry	Enter pressure value for the upper calibration point (container full). → See also FULL CALIB. **Prerequisite:** ▪ CALIBRATION MODE = Dry **Factory setting:** 100.0
SET LRV (013) Entry	Enter value for the lower current value (4 mA). The unit is selected via the OUTPUT UNIT parameter (→ Page 71). **Factory setting:** 0.0
SET URV (012) Entry	Enter value for the upper current value (20 mA). The unit is selected via the OUTPUT UNIT parameter (→ Page 71). **Factory setting:** 100.0
DAMPING VALUE (247) Entry	Enter damping time (time constant τ). The damping affects the speed at which all subsequent elements, such as the on-site display, measured value and current output react to a change in the pressure. **Input range:** 0.0 to 999.0 s **Factory setting:** 2.0 s or as per order specifications

Table 9: (GROUP SELECTION→) OPERATING MENU → SETTINGS → BASIC SETUP "Level", LEVEL SELECTION "Level Easy Height"
The following parameters are displayed if you have selected the "Level Easy Height" option for the LEVEL SELECTION parameter. For this level mode, specify a height unit, density and two height-level value pairs. The pressure measured value is converted to a height value using the density entered and the height. Two calibration modes, "Wet" and "Dry", are available. **Prerequisite**: ▪ MEASURING MODE = Level ▪ LEVEL SELECTION = Level Easy Height

Table 9: (GROUP SELECTION→) OPERATING MENU → SETTINGS → BASIC SETUP "Level", LEVEL SELECTION "Level Easy Height"	
PRESS. ENG. UNIT (060) Options	Select pressure unit. If a new pressure unit is selected, all pressure-specific parameters are converted and displayed with the new unit. **Options:** ▪ mbar, bar ▪ mmH2O, mH2O, inH2O, ftH2O 1) ▪ Pa, hPa, kPa, MPa ▪ psi ▪ mmHg, inHg 2) ▪ Torr ▪ g/cm^2, kg/cm^2 ▪ lb/ft^2 ▪ atm ▪ gf/cm^2, kgf/cm^2 ▪ User unit, → See also the following parameter description for CUSTOMER UNIT P and CUST. UNIT FACT. P. 1) The conversion factor of the pressure units refers to a reference temperature of 4 °C (39.2 °F). 2) The conversion factor of the pressure units refers to a reference temperature of 0 °C (32 °F). **Factory setting:** Depends on the sensor nominal measuring range mbar or bar or as per order specifications
CUSTOMER UNIT P (075) Entry	Enter text (unit) for customised pressure unit. You can enter a maximum of eight alphanumeric characters here. → See also CUST. UNIT FACT. P. **Prerequisite:** ▪ PRESS. ENG. UNIT = User unit Only the first five characters are shown on the on-site display. For example, if "crates" is specified as the customer-specific unit, "crate" is displayed. If the unit contains a slash, up to eight characters can be shown on the on-site display. The maximum number of characters in the counter is again limited to five. For example, if "crates/m2" is specified as the customer-specific unit, "crate/m2" is displayed. In the FieldCare, all eight characters are displayed. In the HART handheld terminal, the customised unit is displayed only in the CUSTOMER UNIT P parameter. The measured value is displayed with the additional text "User Unit". **Factory setting:** – – – – – – – –
CUST. UNIT FACT. P (317) Entry	Enter conversion factor for a customer-specific pressure unit. The conversion factor must be entered in relation to the SI unit "Pa". → See also CUSTOMER UNIT P. **Prerequisite:** ▪ PRESS. ENG. UNIT = User unit **Example:** – You want the measured value to be displayed in "PU" (PU: packing unit). – MEASURED VALUE =10000 Pa ≙ 1 PU – Entry CUSTOMER UNIT P: PU – Entry CUST. UNIT FACT. P: 0.0001 – Result: MEASURED VALUE = 1 PU **Factory setting:** 1.0

Table 9: (GROUP SELECTION→) OPERATING MENU → SETTINGS → BASIC SETUP "Level", LEVEL SELECTION "Level Easy Height"	
OUTPUT UNIT (023) Options	Select unit for measured value display and MEASURED VALUE parameter (→ Page 121). The selected unit is used only to describe the measured value. This means that when selecting a new output unit, the measured value is not converted. Example: ▪ current measured value: 0.3 ft ▪ new output unit: m ▪ new measured value: 0.3 m (0.98 ft) **Options:** ▪ % ▪ mm, cm, dm, m ▪ ft, inch ▪ cm^3, dm^3, m^3,m^3 E^3 ▪ l, hl ▪ ft^3, ft^3 E^3 ▪ gal, bbl, Igal ▪ g, kg, t ▪ lb, ton, oz **Factory setting:** %
HEIGHT UNIT (003) Options	Select height unit. The measured pressure is converted to the chosen height unit using the DENSITY UNIT and ADJUST DENSITY parameters. **Options:** ▪ mm ▪ cm ▪ dm ▪ m ▪ inch ▪ ft **Factory setting:** m
CALIBRATION MODE (008) Options	Select calibration mode. **Options:** ▪ Wet Wet calibration takes place by filling and emptying the container. The measured pressure is converted to the chosen height unit using the HEIGHT UNIT, DENSITY UNIT and ADJUST DENSITY parameters. In the case of two different levels, the level, volume, mass or percentage value entered is assigned to the converted height value. ▪ Dry Dry calibration is a theoretical calibration. For this calibration, specify two height-level value pairs via the EMPTY CALIB., EMPTY HEIGHT, FULL CALIB. and FULL HEIGHT parameters. **Factory setting:** Dry
DENSITY UNIT (001) Options	Select density unit. The measured pressure is converted to a height using the HEIGHT UNIT, DENSITY UNIT and ADJUST DENSITY parameters. **Options:** ▪ g/cm^3 ▪ kg/dm^3 ▪ kg/m^3 ▪ US lb/in^3 ▪ US lb/ft^3 **Factory setting:** kg/dm^3
ADJUST DENSITY (007) Entry	Enter density of fluid. The measured pressure is converted to a height using the HEIGHT UNIT, DENSITY UNIT and ADJUST DENSITY parameters. **Factory setting:** 1.0

Table 9: (GROUP SELECTION→) OPERATING MENU → SETTINGS → BASIC SETUP "Level", LEVEL SELECTION "Level Easy Height"	
EMPTY CALIB. (010) Entry	Enter level, volume, mass or percentage value for the lower calibration point (container empty). The container is either empty or part full. The measured pressure is converted to a height value using the HEIGHT UNIT, DENSITY UNIT and ADJUST DENSITY parameters and displayed. Using the parameter EMPTY CALIB., you assign a level, volume, mass or percentage value to the height value. The unit is selected via the OUTPUT UNIT parameter (→ Page 75). **Prerequisite:** ▪ CALIBRATION MODE = Wet For this parameter, the on-site display shows the level value to be entered and the pressure present at the device. In order for the level value to be saved together with the pressure present at the device, the entry field for the level value must first be activated using the ⊞ or ⊟ key before confirming with the Ⓔ key. This applies also if the level value is to remain unchanged. **Factory setting:** 0.0
FULL CALIB. (004) Entry	Enter level, volume, mass or percentage value for the upper calibration point (container full). The container is either completely or almost full. Using the parameters HEIGHT UNIT, DENSITY UNIT and ADJUST DENSITY, the measured pressure is converted to a height value and displayed. Using the parameter FULL CALIB., you assign a level, volume, mass or percentage value to the height value. The unit is selected via the OUTPUT UNIT parameter (→ Page 75). **Prerequisite:** ▪ CALIBRATION MODE = Wet For this parameter, the on-site display shows the level value to be entered and the pressure present at the device. In order for the level value to be saved together with the pressure present at the device, the entry field for the level value must first be activated using the ⊞ or ⊟ key before confirming with the Ⓔ key. This applies also if the level value is to remain unchanged. **Factory setting:** 100.0
EMPTY CALIB. (010) Entry	Enter level, volume, mass or percentage value for the lower calibration point (container empty). The values entered for the EMPTY CALIB. and EMPTY HEIGHT parameters form the height-level value pair for the lower calibration point. The unit is selected via the OUTPUT UNIT parameter (→ Page 75). **Prerequisite:** ▪ CALIBRATION MODE = Dry **Factory setting:** 0.0
EMPTY HEIGHT (009) Entry	Height value for the lower calibration point (container empty). The unit is selected via the HEIGHT UNIT parameter (→ Page 75). → See also EMPTY CALIB. **Prerequisite:** ▪ CALIBRATION MODE = Dry **Factory setting:** Upper range limit (URL) coverted to an height unit
FULL CALIB. (004) Entry	Enter level, volume, mass or percentage value for the upper calibration point (container full). The values entered for the FULL CALIB. and FULL HEIGHT parameters form the height-level value pair for the upper calibration point. The unit is selected via the OUTPUT UNIT parameter (→ Page 75). **Prerequisite:** ▪ CALIBRATION MODE = Dry **Factory setting:** 100.0

Table 9: (GROUP SELECTION→) OPERATING MENU → SETTINGS → BASIC SETUP "Level", LEVEL SELECTION "Level Easy Height"	
FULL HEIGHT (006) Entry	Enter height value for the upper calibration point (container full). The unit is selected via the HEIGHT UNIT parameter (→ Page 75). → See also FULL CALIB. **Prerequisite:** ▪ CALIBRATION MODE = Dry **Factory setting:** 0.0
SET LRV (013) Entry	Enter level, volume, mass or percentage value for the lower current value (4 mA). The unit is selected via the OUTPUT UNIT parameter (→ Page 75). **Factory setting:** 0.0
SET URV (012) Entry	Enter level, volume, mass or percentage value for the upper current value (20 mA). The unit is selected via the OUTPUT UNIT parameter (→ Page 75). **Factory setting:** 100.0
DAMPING VALUE (247) Entry	Enter damping time (time constant τ). The damping affects the speed at which all subsequent elements, such as the on-site display, measured value and current output react to a change in the pressure. **Input range:** 0.0 to 999.0 s **Factory setting:** 2.0 s or as per order specifications

Table 10: (GROUP SELECTION →) OPERATING MENU → SETTINGS → BASIC SETUP "Level" LEVEL SELECTION "Level Standard"	
Parameter name	**Description**
Prerequisite: ▪ MEASURING MODE = level ▪ LEVEL SELECTION = Level Standard	
PRESS. ENG. UNIT (060) Selection	Select pressure unit. If a new pressure unit is selected, all pressure-specific parameters are converted and displayed with the new unit. **Options:** ▪ mbar, bar ▪ mmH2O, mH2O, inH2O, ftH2O 1) ▪ Pa, hPa, kPa, MPa ▪ psi ▪ mmHg, inHg 2) ▪ Torr ▪ g/cm^2, kg/cm^2 ▪ lb/ft^2 ▪ atm ▪ gf/cm^2, kgf/cm^2 ▪ User unit, → See also the following parameter description for CUSTOMER UNIT P and CUST. UNIT FACT. P. 1) The conversion factor of the pressure units refers to a reference temperature of 4 °C (39.2 °F). 2) The conversion factor of the pressure units refers to a reference temperature of 0 °C (32 °F). **Factory setting:** Depends on the sensor nominal measuring range mbar or bar or as per order specifications

Table 10: (GROUP SELECTION →) OPERATING MENU → SETTINGS → BASIC SETUP "Level" LEVEL SELECTION "Level Standard"	
Parameter name	**Description**
CUSTOMER UNIT P (075) Entry	Enter text (unit) for customer-specific pressure unit. You can enter a maximum of eight alphanumeric characters here. → See also CUST. UNIT FACT. P. **Prerequisite:** ▪ PRESS. ENG. UNIT = User unit Only the first five characters are shown on the on-site display. For example, if "crates" is specified as the customer-specific unit, "crate" is displayed. If the unit contains a slash, up to eight characters can be shown on the on-site display. The maximum number of characters in the counter is again limited to five. For example, if "crates/m2" is specified as the customer-specific unit, "crate/m2" is displayed. In the FieldCare, all eight characters are displayed. In the HART handheld terminal, the customer-specific unit is only displayed in the CUSTOMER UNIT P parameter. The measured value is displayed with the additional text "User Unit". **Factory setting:** – – – – – – – –
CUST. UNIT FACT. P (317) Entry	Enter conversion factor for a customer-specific pressure unit. The conversion factor must be entered in relation to the SI unit "Pa". → See also CUSTOMER UNIT P. **Prerequisite:** ▪ PRESS. ENG. UNIT = User unit **Example:** – You want the measured value to be displayed in "PU" (PU: packing unit). – MEASURED VALUE =10000 Pa ≙ 1 PU – Entry CUSTOMER UNIT P: PU – Entry CUST. UNIT FACT. P: 0.0001 – Result: MEASURED VALUE = 1 PU **Factory setting:** 1.0
LEVEL MODE (718) Selection	Select level type. **Options:** ▪ Linear: the measured variable (level, volume, mass or %) is in direct proportion to the measured pressure. → See also Page 79 ff, Table 9. ▪ Pressure Linearized: the measured variable (volume, mass or %) is not in direct proportion to the measured pressure such as in the case of containers with a conical outlet. For the calibration, enter a linearisation table with at least 2 and not more than 32 points. → See also Page 87 ff, Table 10. ▪ Height Linearized: select this level type if you require two measured variables or if the container shape is given with value pairs, e.g. height and volume. The following combinations are possible: – Height + Volume – Height + Mass – Height + % – %-Height + Volume – %-Height + Mass – %-Height + % Perform two calibrations for this level type. First for the measured variable height or %-height like for the "Linear" option and then for the measured variable volume, mass or % like for the "Pressure Linearized" option. → See also Page 89 ff, Table 11. **Factory setting:** Linear
→ For LEVEL MODE = Linear, see Page 79, Table 9. → For LEVEL MODE = Pressure Linearized, see Page 87, Table 10. → For LEVEL MODE = Height Linearized, see Page 89, Table 11.	

Table 11: (GROUP SELECTION →) OPERATING MENU → SETTINGS → BASIC SETUP "Level", LEVEL MODE "Linear"	
Parameter name	**Description**
The following parameters are displayed if you selected the "Linear" option for the LEVEL MODE parameter. For this level type, the measured variable (level, volume, mass or %) is in direct proportion to the measured pressure. **Prerequisite**: ▪ MEASURING MODE = Level . ▪ LEVEL SELECTION = Level Standard ▪ LEVEL MODE = Linear	
LIN. MEASURAND (804) Selection	Select measured variable. **Options:** ▪ Level ▪ Volume ▪ Mass ▪ % (Level) **Factory setting:** % (Level)
HEIGHT UNIT (708) Selection	Select level unit. **Prerequisite:** ▪ LIN. MEASURAND = Level **Options:** ▪ mm ▪ cm ▪ dm ▪ m ▪ inch ▪ ft ▪ User unit, → see also the following parameter description for CUSTOMER UNIT H and CUST. UNIT FACT. H. **Factory setting:** m
CUSTOMER UNIT H (706) Entry	Enter text (unit) for customer-specific level unit. You can enter a maximum of eight alphanumeric characters here. → See also CUST. UNIT FACT. H. **Prerequisite:** ▪ LIN. MEASURAND = Level, HEIGHT UNIT = User unit Only the first five characters are shown on the on-site display. For example, if "crates" is specified as the customer-specific unit, "crate" is displayed. If the unit contains a slash, up to eight characters can be shown on the on-site display. The maximum number of characters in the counter is again limited to five. For example, if "crates/m2" is specified as the customer-specific unit, "crate/m2" is displayed. In the FieldCare, all eight characters are displayed. In the HART handheld terminal, the customer-specific unit is only displayed in the CUSTOMER UNIT H parameter. The measured value is displayed with the additional text "User Unit". **Factory setting:** _ _ _ _ _ _ _ _

Table 11: (GROUP SELECTION →) OPERATING MENU → SETTINGS → BASIC SETUP "Level", LEVEL MODE "Linear"	
Parameter name	**Description**
CUST. UNIT FACT. H (705) Entry	Enter conversion factor for a customer-specific level unit. The conversion factor must be entered in relation to the SI unit "m". → See also CUSTOMER UNIT H. **Prerequisite:** ▪ LIN. MEASURAND = Level, HEIGHT UNIT = User unit **Example:** – You want the measured value to be displayed in "PU" (PU: packing unit). – MEASURED VALUE = 0.5 m (1.6 ft) ≙ 1 PU – Entry CUSTOMER UNIT H: PU – Entry CUST. UNIT FACT. H: 2 – Result: MEASURED VALUE = 1 PU **Factory setting:** 1.0
UNIT VOLUME (313) Selection	Select volume unit. **Prerequisite:** ▪ LIN. MEASURAND = Volume **Options:** ▪ l ▪ hl ▪ cm^3 ▪ dm^3 ▪ m^3 ▪ m^3 E^3 ▪ ft ▪ ft^3 E^3 ▪ gal ▪ Igal ▪ bbl ▪ User unit, → see also the following parameter description for CUSTOMER UNIT V and CUST. UNIT FACT. V. **Factory setting:** m^3
CUSTOMER UNIT V (608) Entry	Enter text (unit) for customer-specific volume unit. You can enter a maximum of eight alphanumeric characters here. → See also CUST. UNIT FACT. V **Prerequisite:** ▪ LIN. MEASURAND = Volume, UNIT VOLUME = User unit Only the first five characters are shown on the on-site display. For example, if "crates" is specified as the customer-specific unit, "crate" is displayed. If the unit contains a slash, up to eight characters can be shown on the on-site display. The maximum number of characters in the counter is again limited to five. For example, if "crates/m2" is specified as the customer-specific unit, "crate/m2" is displayed. In the FieldCare, all eight characters are displayed. In the HART handheld terminal, the customer-specific unit is only displayed in the CUSTOMER UNIT H parameter. The measured value is displayed with the additional text "User Unit". **Factory setting:** _ _ _ _ _ _ _ _

Table 11: (GROUP SELECTION →) OPERATING MENU → SETTINGS → BASIC SETUP "Level", LEVEL MODE "Linear"	
Parameter name	**Description**
CUST. UNIT FACT. V (607) Entry	Enter conversion factor for a customer-specific volume unit. The conversion factor must be entered in relation to the SI unit "m^3". → See also CUSTOMER UNIT V. **Prerequisite:** ▪ LIN. MEASURAND = Volume, UNIT VOLUME = User unit **Example:** – You want the measured value to be displayed in "buckets". – MEASURED VALUE = 0.01 m3 ≙ 1 bucket – Entry CUSTOMER UNIT V: bucket – Entry CUST. UNIT FACT. V: 100 – Result: MEASURED VALUE = 1 bucket **Factory setting:** 1.0
MASS UNIT (709) Selection	Select mass unit. **Prerequisite:** ▪ LIN. MEASURAND = Mass **Options:** ▪ g ▪ kg ▪ t ▪ oz ▪ lb ▪ ton ▪ User unit, → see also the following parameter description for CUSTOMER UNIT M and CUST. UNIT FACT. M. **Factory setting:** kg
CUSTOMER UNIT M (704) Entry	Enter text (unit) for customer-specific mass unit. You can enter a maximum of eight alphanumeric characters here. → See also CUST. UNIT FACT. M. **Prerequisite:** ▪ LIN. MEASURAND = Mass, MASS UNIT = User unit Only the first five characters are shown on the on-site display. For example, if "crates" is specified as the customer-specific unit, "crate" is displayed. If the unit contains a slash, up to eight characters can be shown on the on-site display. The maximum number of characters in the counter is again limited to five. For example, if "crates/m2" is specified as the customer-specific unit, "crate/m2" is displayed. In the FieldCare, all eight characters are displayed. In the HART handheld terminal, the customer-specific unit is only displayed in the CUSTOMER UNIT M parameter. The measured value is displayed with the additional text "User Unit". **Factory setting:** _ _ _ _ _ _ _ _

Table 11: (GROUP SELECTION →) OPERATING MENU → SETTINGS → BASIC SETUP "Level", LEVEL MODE "Linear"	
Parameter name	**Description**
CUST. UNIT FACT. M (703) Entry	Enter conversion factor for a customer-specific mass unit. The conversion factor must be entered in relation to the SI unit "kg". → See also CUSTOMER UNIT M. **Prerequisite:** ▪ LIN. MEASURAND = Mass, MASS UNIT = User unit **Example:** – You want the measured value to be displayed in "buckets". – MEASURED VALUE = 10 kg ≙ 1 bucket – Entry CUSTOMER UNIT M: bucket – Entry CUST. UNIT FACT. M: 0.1 – Result: MEASURED VALUE = 1 bucket **Factory setting:** 1.0
CALIBRATION MODE (392) Selection	Select calibration mode. **Options:** ▪ Wet Wet calibration takes place by filling and emptying the container. This calibration mode requires two pressure-level value pairs to be entered. In the case of two different levels, the level value is entered and the pressure measured at this moment is assigned to the level value. → See also the following parameter description for EMPTY CALIB., EMPTY PRESSURE, FULL CALIB. and FULL PRESSURE. ▪ Dry Dry calibration is a theoretical calibration which you can carry out even if the device is not mounted or the container is empty. – For the "Level" measured variable, the density of the fluid (→ see Page 83, ADJUST DENSITY) must be entered. – For the "Volume" measured variable, the density of the fluid and the tank volume and tank height must be entered (→ see Page 83, ADJUST DENSITY, TANK VOLUME and TANK HEIGHT). – For the "Mass" measured variable, the tank volume and the tank height must be entered (→ see Page 84, TANK VOLUME and TANK HEIGHT). The density must also be entered in the case of a zero point shift (level offset) (→ see Page 83, ADJUST DENSITY). – For the "%" measured variable, the density of the fluid must be entered and a level assigned to the 100 % point (→ see Page 83 and 86, ADJUST DENSITY and 100% POINT). If the measurement should not start at the mounting location of the device, a level offset must be entered (→ see Page 86, ZERO POSITION). LIN. MEASURAND: "% (Level)", "Mass" and "Volume": If the change to dry calibration is made after a wet calibration, the density must be entered correctly using the ADJUST DENSITY and DENSITY PROCESS parameter before changing the calibration mode. → See also Page 101. **Factory setting:** Wet
EMPTY CALIB. (314) Entry	Enter level value for the lower calibration point (container empty). The container is either empty or part full. By entering a value for this parameter, you are assigning a level value to the pressure present at the device. → See also EMPTY PRESSURE. **Prerequisite:** ▪ CALIBRATION MODE = Wet For this parameter, the on-site display shows the level value to be entered and the pressure present at the device. In order for the level value to be saved together with the pressure present at the device, the entry field for the level value must first be activated using the ⊞ or ⊟ key before confirming with the E key. This applies also if the level value is to remain unchanged. **Factory setting:** 0.0

Table 11: (GROUP SELECTION →) OPERATING MENU → SETTINGS → BASIC SETUP "Level", LEVEL MODE "Linear"	
Parameter name	**Description**
EMPTY PRESSURE (710) Display	Displays the pressure value for the lower calibration point (container empty). → See also EMPTY CALIB. **Prerequisite:** ▪ CALIBRATION MODE = Wet **Factory setting:** 0.0
FULL CALIB. (315) Entry	Enter level value for the upper calibration point (container full). The container is either completely or almost full. By entering a value for this parameter, you are assigning a level value to the pressure present at the device. → See also FULL PRESSURE. **Prerequisite:** ▪ CALIBRATION MODE = Wet For this parameter, the on-site display shows the level value to be entered and the pressure present at the device. In order for the level value to be saved together with the pressure present at the device, the entry field for the level value must first be activated using the ⊞ or ⊟ key before confirming with the E key. This applies also if the level value is to remain unchanged. **Factory setting:** 100.0
FULL PRESSURE (711) Display	Displays the pressure value for the upper calibration point (container full). → See also FULL CALIB. **Prerequisite:** ▪ CALIBRATION MODE = Wet **Factory setting:** High sensor limit (→ see PRESS. SENS HILIM, Page 120)
ADJUSTED DENSITY (810) Display	Displays the density calculated from the upper and lower level point. **Prerequisite:** ▪ CALIBRATION MODE = Wet, LIN. MEASURAND = Level
DENSITY UNIT (812) Selection	Select density unit. **Prerequisite:** ▪ LIN. MEASURAND = Level, CALIBRATION MODE = Dry ▪ LIN. MEASURAND = % (Level), CALIBRATION MODE = Dry ▪ LIN. MEASURAND = Volume, CALIBRATION MODE = Dry ▪ LIN. MEASURAND = Mass, CALIBRATION MODE = Dry **Options:** ▪ g/cm^3 ▪ kg/dm^3 ▪ kg/m^3 ▪ US lb/in^3 ▪ US lb/ft^3 **Factory setting:** kg/dm^3
ADJUST DENSITY (316) Entry	Enter density of fluid. **Prerequisite:** ▪ CALIBRATION MODE = Dry **Factory setting:** 1.0 (kg/dm^3)

Table 11: (GROUP SELECTION →) OPERATING MENU → SETTINGS → BASIC SETUP "Level", LEVEL MODE "Linear"	
Parameter name	**Description**
UNIT VOLUME (313) Selection	Select volume unit. **Prerequisite:** ▪ LIN. MEASURAND = Volume **Options:** ▪ l ▪ hl ▪ cm^3 ▪ dm^3 ▪ m^3 ▪ m^3 E^3 ▪ ft ▪ ft^3 E^3 ▪ gal ▪ Igal ▪ bbl ▪ User unit, → see also the following parameter description for CUSTOMER UNIT V and CUST. UNIT FACT. V. **Factory setting:** m^3
CUSTOMER UNIT V (608) Entry	Enter text (unit) for customer-specific volume unit. You can enter a maximum of eight alphanumeric characters here. → See also CUST. UNIT FACT. V **Prerequisite:** ▪ LIN. MEASURAND = Volume, UNIT VOLUME = User unit Only the first five characters are shown on the on-site display. For example, if "crates" is specified as the customer-specific unit, "crate" is displayed. If the unit contains a slash, up to eight characters can be shown on the on-site display. The maximum number of characters in the counter is again limited to five. For example, if "crates/m2" is specified as the customer-specific unit, "crate/m2" is displayed. In the FieldCare, all eight characters are displayed. In the HART handheld terminal, the customer-specific unit is only displayed in the CUSTOMER UNIT H parameter. The measured value is displayed with the additional text "User Unit". **Factory setting:** _ _ _ _ _ _ _ _
CUST. UNIT FACT. V (607) Entry	Enter conversion factor for a customer-specific volume unit. The conversion factor must be entered in relation to the SI unit "m^3". → See also CUSTOMER UNIT V. **Prerequisite:** ▪ LIN. MEASURAND = Volume, UNIT VOLUME = User unit **Example:** – You want the measured value to be displayed in "buckets". – MEASURED VALUE = 0.01 m3 ≙ 1 bucket – Entry CUSTOMER UNIT V: bucket – Entry CUST. UNIT FACT. V: 100 – Result: MEASURED VALUE = 1 bucket **Factory setting:** 1.0
TANK VOLUME (858) Entry	Enter tank volume. **Prerequisite:** ▪ LIN. MEASURAND = Volume, CALIBRATION MODE = Dry ▪ LIN. MEASURAND = Mass, CALIBRATION MODE = Dry **Factory setting:** 1.0 m^3

Table 11: (GROUP SELECTION →) OPERATING MENU → SETTINGS → BASIC SETUP "Level", LEVEL MODE "Linear"	
Parameter name	**Description**
HEIGHT UNIT (708) Selection	Select level unit. **Prerequisite:** ▪ LIN. MEASURAND = % (Level), CALIBRATION MODE = Dry **Options:** ▪ mm ▪ dm ▪ cm ▪ m ▪ inch ▪ ft ▪ User unit, → see also the following parameter description for CUSTOMER UNIT H and CUST. UNIT FACT. H. **Factory setting:** m
CUSTOMER UNIT H (706) Entry	Enter text (unit) for customer-specific level unit. You can enter a maximum of eight alphanumeric characters here. → See also CUST. UNIT FACT. H. **Prerequisite:** ▪ LIN. MEASURAND = % (Level), CALIBRATION MODE = Dry, HEIGHT UNIT = User unit Only the first five characters are shown on the on-site display. For example, if "crates" is specified as the customer-specific unit, "crate" is displayed. If the unit contains a slash, up to eight characters can be shown on the on-site display. The maximum number of characters in the counter is again limited to five. For example, if "crates/m2" is specified as the customer-specific unit, "crate/m2" is displayed. In the FieldCare, all eight characters are displayed. In the HART handheld terminal, the customer-specific unit is only displayed in the CUSTOMER UNIT H parameter. The measured value is displayed with the additional text "User Unit". **Factory setting:** _ _ _ _ _ _ _ _
CUST. UNIT FACT. H (705) Entry	Enter conversion factor for a customer-specific level unit. The conversion factor must be entered in relation to the SI unit "m". → See also CUSTOMER UNIT H. **Prerequisite:** ▪ LIN. MEASURAND = % (Level), CALIBRATION MODE = Dry, HEIGHT UNIT = User unit **Example:** – You want the measured value to be displayed in "PU" (PU: packing unit). – MEASURED VALUE = 0.5 m (1.6 ft) ≙ 1 PU – Entry CUSTOMER UNIT H: PU – Entry CUST. UNIT FACT. H: 2 – Result: MEASURED VALUE = 1 PU **Factory setting:** 1.0
TANK HEIGHT (859) Entry	Enter tank height. **Prerequisite:** ▪ LIN. MEASURAND = Volume, CALIBRATION MODE = Dry ▪ LIN. MEASURAND = Mass, CALIBRATION MODE = Dry **Factory setting:** 1.0 m

Table 11: (GROUP SELECTION →) OPERATING MENU → SETTINGS → BASIC SETUP "Level", LEVEL MODE "Linear"	
Parameter name	**Description**
100% POINT (813) Entry	Enter level value for 100% point. **Prerequisite:** ▪ LIN. MEASURAND = % (Level), CALIBRATION MODE = Dry **Example:** – The 100 %-point should correspond to 4 m (13 ft). – Select the "m" unit via the HEIGHT UNIT parameter. – Enter the value "4" for this parameter (100% POINT). **Factory setting:** 1.0
ZERO POSITION (814) Entry	Enter value for level offset. If the measurement should not start at the mounting location of the device, e.g. for containers with a sump, carry out zero point shift (level offset). **Prerequisite:** ▪ CALIBRATION MODE = Dry **Factory setting:** 0.0 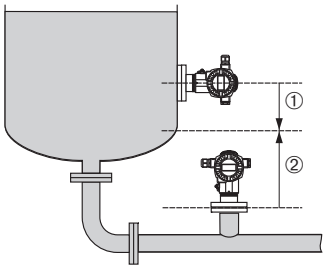 *Fig. 21: Zero point shift* *1 Device is mounted above the level lower range value: a positive value has to be entered for ZERO POSITION.* *2 Device is mounted below the level lower range value: a negative value has to be entered for ZERO POSITION.*
SET LRV (719) Entry	Enter level value for the lower current value (4 mA). **Factory setting:** 0.0
SET URV (720) Entry	Enter level value for the upper current value (20 mA). **Factory setting:** 100.0
DAMPING VALUE (247) Entry	Enter damping time (time constant τ). The damping affects the speed at which all subsequent elements, such as the on-site display, measured value and current output react to a change in the pressure. **Input range:** 0.0...999.0 s **Factory setting:** 2.0 s or as per order specifications

Table 12: (GROUP SELECTION →) OPERATING MENU → SETTINGS → BASIC SETUP "Level", LEVEL MODE "Pressure Linearized"	
Parameter name	**Description**
The following parameters are displayed if you selected the "Pressure Linearized" option for the LEVEL MODE parameter. For this level type, the measured variable (volume, mass or %) is not in direct proportion to the measured pressure. For the calibration, enter a linearisation table with at least 2 and not more than 32 points. **Prerequisite**: ▪ MEASURING MODE = Level ▪ LEVEL SELECTION = Level Standard ▪ LEVEL MODE = Pressure Linearized	
LINd. MEASURAND (805) Selection	Select measured variable. **Options:** ▪ Pressure and Volume ▪ Pressure and Mass ▪ Pressure and % **Factory setting:** Pressure and %
UNIT VOLUME (313) Selection	Select volume unit. **Prerequisite:** ▪ LINd. MEASURAND = Pressure and Volume **Options:** ▪ l ▪ hl ▪ cm^3 ▪ dm^3 ▪ m^3 ▪ m^3 E^3 ▪ ft ▪ ft^3 E^3 ▪ gal ▪ Igal ▪ bbl ▪ User unit, → see also the following parameter description for CUSTOMER UNIT V and CUST. UNIT FACT. V. **Factory setting:** m^3
CUSTOMER UNIT V (608) Entry	Enter text (unit) for customer-specific volume unit. You can enter a maximum of eight alphanumeric characters here. → See also CUST. UNIT FACT. V **Prerequisite:** ▪ LINd. MEASURAND = Pressure and Volume, UNIT VOLUME = User unit Only the first five characters are shown on the on-site display. For example, if "crates" is specified as the customer-specific unit, "crate" is displayed. If the unit contains a slash, up to eight characters can be shown on the on-site display. The maximum number of characters in the counter is again limited to five. For example, if "crates/m2" is specified as the customer-specific unit, "crate/m2" is displayed. In the FieldCare, all eight characters are displayed. In the HART handheld terminal, the customer-specific unit is only displayed in the CUSTOMER UNIT V parameter. The measured value is displayed with the additional text "User Unit". **Factory setting:** – – – – – – – –

Table 12: (GROUP SELECTION →) OPERATING MENU → SETTINGS → BASIC SETUP "Level", LEVEL MODE "Pressure Linearized"	
Parameter name	**Description**
CUST. UNIT FACT. V (607) Entry	Enter conversion factor for a customer-specific volume unit. The conversion factor must be entered in relation to the SI unit "m^3". → See also CUSTOMER UNIT V. **Prerequisite:** ▪ LINd. MEASURAND = Pressure and Volume, UNIT VOLUME = User unit **Example:** – You want the measured value to be displayed in "buckets". – MEASURED VALUE = 0.01 m3 ≙ 1 bucket – Entry CUSTOMER UNIT V: bucket – Entry CUST. UNIT FACT. V: 100 – Result: MEASURED VALUE = 1 bucket **Factory setting:** 1.0
MASS UNIT (709) Selection	Select mass unit. **Prerequisite:** ▪ LINd. MEASURAND = Pressure and Mass **Options:** ▪ g ▪ kg ▪ t ▪ oz ▪ lb ▪ ton ▪ User unit, → see also the following parameter description for CUSTOMER UNIT M and CUST. UNIT FACT. M. **Factory setting:** kg
CUSTOMER UNIT M (704) Entry	Enter text (unit) for customer-specific mass unit. You can enter a maximum of eight alphanumeric characters here. → See also CUST. UNIT FACT. M. **Prerequisite:** ▪ LINd. MEASURAND = Pressure and Mass, MASS UNIT = User unit Only the first five characters are shown on the on-site display. For example, if "crates" is specified as the customer-specific unit, "crate" is displayed. If the unit contains a slash, up to eight characters can be shown on the on-site display. The maximum number of characters in the counter is again limited to five. For example, if "crates/m2" is specified as the customer-specific unit, "crate/m2" is displayed. In the FieldCare, all eight characters are displayed. In the HART handheld terminal, the customer-specific unit is only displayed in the CUSTOMER UNIT M parameter. The measured value is displayed with the additional text "User Unit". **Factory setting:** _ _ _ _ _ _ _ _

Table 12: (GROUP SELECTION →) OPERATING MENU → SETTINGS → BASIC SETUP "Level", LEVEL MODE "Pressure Linearized"	
Parameter name	**Description**
CUST. UNIT FACT. M (703) Entry	Enter conversion factor for a customer-specific mass unit. The conversion factor must be entered in relation to the SI unit "kg". → See also CUSTOMER UNIT M. **Prerequisite:** ▪ LINd. MEASURAND = Pressure and Mass, MASS UNIT = User unit **Example:** – You want the measured value to be displayed in "buckets". – MEASURED VALUE = 10 kg ≙ 1 bucket – Entry CUSTOMER UNIT M: bucket – Entry CUST. UNIT FACT. M: 0.1 – Result: MEASURED VALUE = 1 bucket **Factory setting:** 1.0
HYDR. PRESS MIN. (775) Entry	Enter the minimum hydrostatic pressure to be expected. The input limits for the calibration (editing limits) are derived from the value entered. The closer the value entered corresponds to the minimum hydrostatic pressure to be expected, the more accurate the measurement result. **Factory setting:** 0.0
HYDR. PRESS MAX. (761) Entry	Enter the maximum hydrostatic pressure to be expected. The input limits for the calibration (editing limits) are derived from the value entered. The closer the value entered corresponds to the maximum hydrostatic pressure to be expected, the more accurate the measurement result. **Factory setting:** High sensor limit (→ See PRESS. SENS HILIM, Page 120)
DAMPING VALUE (247) Entry	Enter damping time (time constant τ). The damping affects the speed at which all subsequent elements, such as the on-site display, measured value and current output react to a change in the pressure. **Input range:** 0.0...999.0 s **Factory setting:** 2.0 s or as per order specifications

Table 13: (GROUP SELECTION →) OPERATING MENU → SETTINGS → BASIC SETUP "Level", LEVEL MODE "Height Linearized"	
Parameter name	**Description**
The following parameters are displayed if you selected the "Height Linearized" option for the LEVEL MODE parameter. Select this level type if you require two measured variables or if the container shape is given with value pairs, e.g. height and volume. The following combinations are possible: ▪ Height + Volume ▪ Height + Mass ▪ Height + % ▪ %-Height + Volume ▪ %-Height + Mass ▪ %-Height + % The 1st measured variable (%-Height or Height) must be in direct proportion to the measured pressure. The 2nd measured variable (Volume, Mass or %) must not be in direct proportion. A linearisation table must be entered for the 2nd measured variable. The 2nd measured variable is assigned to the 1st measured variable by means of this table. **Prerequisite**: ▪ MEASURING MODE = Level ▪ LEVEL SELECTION = Level Standard ▪ LEVEL MODE = Height Linearized	

Table 13: (GROUP SELECTION →) OPERATING MENU → SETTINGS → BASIC SETUP "Level", LEVEL MODE "Height Linearized"	
Parameter name	**Description**
COMB. MEASURAND (806) Selection	Select measured variable. **Options:** ▪ Height and Volume ▪ Height and Mass ▪ Height and % ▪ %-Height and Volume ▪ %-Height and Mass ▪ %-Height and % **Factory setting:** %-Height and %
HEIGHT UNIT (708) Selection	Select level unit for the 1st measured variable. **Prerequisite:** ▪ COMB. MEASURAND = Height and Volume, Height and Mass or Height and % **Options:** ▪ mm ▪ dm ▪ cm ▪ m ▪ inch ▪ ft ▪ User unit, → see also the following parameter description for CUSTOMER UNIT H and CUST. UNIT FACT. H. **Factory setting:** m
CUSTOMER UNIT H (706) Entry	Enter text (unit) for customer-specific level unit. You can enter a maximum of eight alphanumeric characters here. → See also CUST. UNIT FACT. H. **Prerequisite:** ▪ COMB. MEASURAND = Height and Volume, HEIGHT UNIT = User unit ▪ COMB. MEASURAND = Height and Mass, HEIGHT UNIT = User unit ▪ COMB. MEASURAND = Height and %, HEIGHT UNIT = User unit Only the first five characters are shown on the on-site display. For example, if "crates" is specified as the customer-specific unit, "crate" is displayed. If the unit contains a slash, up to eight characters can be shown on the on-site display. The maximum number of characters in the counter is again limited to five. For example, if "crates/m2" is specified as the customer-specific unit, "crate/m2" is displayed. In the FieldCare, all eight characters are displayed. In the HART handheld terminal, the customer-specific unit is only displayed in the CUSTOMER UNIT H parameter. The measured value is displayed with the additional text "User Unit". **Factory setting:** _ _ _ _ _ _ _ _
CUST. UNIT FACT. H (705) Entry	Enter conversion factor for a customer-specific level unit. The conversion factor must be entered in relation to the SI unit "m". → See also CUSTOMER UNIT H. **Prerequisite:** ▪ COMB. MEASURAND = Height and Volume, HEIGHT UNIT = User unit ▪ COMB. MEASURAND = Height and Mass, HEIGHT UNIT = User unit ▪ COMB. MEASURAND = Height and %, HEIGHT UNIT = User unit **Example:** – You want the measured value to be displayed in "PU" (PU: packing unit). – MEASURED VALUE = 0.5 m (1,6 ft) ≙ 1 PU – Entry CUSTOMER UNIT H: PU – Entry CUST. UNIT FACT. H: 2 – Result: MEASURED VALUE = 1 PU **Factory setting:** 1.0

Table 13: (GROUP SELECTION →) OPERATING MENU → SETTINGS → BASIC SETUP "Level", LEVEL MODE "Height Linearized"	
Parameter name	**Description**
UNIT VOLUME (313) Selection	Select the volume unit for the 2nd measured value. **Prerequisite:** ▪ COMB. MEASURAND = Height and Volume or %-Height and Volume **Options:** ▪ l ▪ hl ▪ cm^3 ▪ dm^3 ▪ m^3 ▪ m^3 E^3 ▪ ft ▪ ft^3 E^3 ▪ gal ▪ Igal ▪ bbl ▪ User unit, → see also the following parameter description for CUSTOMER UNIT V and CUST. UNIT FACT. V. **Factory setting:** m^3
CUSTOMER UNIT V (608) Entry	Enter text (unit) for customer-specific volume unit. You can enter a maximum of eight alphanumeric characters here. → See also CUST. UNIT FACT. V **Prerequisite:** ▪ COMB. MEASURAND = Height and Volume, HEIGHT UNIT = User unit ▪ COMB. MEASURAND = %-Height and Volume, HEIGHT UNIT = User unit Only the first five characters are shown on the on-site display. For example, if "crates" is specified as the customer-specific unit, "crate" is displayed. If the unit contains a slash, up to eight characters can be shown on the on-site display. The maximum number of characters in the counter is again limited to five. For example, if "crates/m2" is specified as the customer-specific unit, "crate/m2" is displayed. In the FieldCare, all eight characters are displayed. In the HART handheld terminal, the customer-specific unit is only displayed in the CUSTOMER UNIT V parameter. The measured value is displayed with the additional text "User Unit". **Factory setting:** – – – – – – – –
CUST. UNIT FACT. V (607) Entry	Enter conversion factor for a customer-specific volume unit. The conversion factor must be entered in relation to the SI unit "m^3". → See also CUSTOMER UNIT V. **Prerequisite:** ▪ COMB. MEASURAND = Height and Volume, HEIGHT UNIT = User unit ▪ COMB. MEASURAND = %-Height and Volume, HEIGHT UNIT = User unit **Example:** – You want the measured value to be displayed in "buckets". – MEASURED VALUE = 0.01 m3 ≙ 1 bucket – Entry CUSTOMER UNIT V: bucket – Entry CUST. UNIT FACT. V: 100 – Result: MEASURED VALUE = 1 bucket **Factory setting:** 1.0

Table 13: (GROUP SELECTION →) OPERATING MENU → SETTINGS → BASIC SETUP "Level", LEVEL MODE "Height Linearized"	
Parameter name	**Description**
MASS UNIT (709) Selection	Select the mass unit for the 2nd measured value. **Prerequisite:** ▪ COMB. MEASURAND = Height and Mass or %-Height and Mass **Options:** ▪ g ▪ kg ▪ t ▪ oz ▪ lb ▪ ton ▪ User unit, → see also the following parameter description for CUSTOMER UNIT M and CUST. UNIT FACT. M. **Factory setting:** kg
CUSTOMER UNIT M (704) Entry	Enter text (unit) for customer-specific mass unit. You can enter a maximum of eight alphanumeric characters here. → See also CUST. UNIT FACT. M. **Prerequisite:** ▪ COMB. MEASURAND = Height and Mass, MASS UNIT = User unit ▪ COMB. MEASURAND = %-Height and Mass, MASS UNIT = User unit Only the first five characters are shown on the on-site display. For example, if "crates" is specified as the customer-specific unit, "crate" is displayed. If the unit contains a slash, up to eight characters can be shown on the on-site display. The maximum number of characters in the counter is again limited to five. For example, if "crates/m2" is specified as the customer-specific unit, "crate/m2" is displayed. In the FieldCare, all eight characters are displayed. In the HART handheld terminal, the customer-specific unit is only displayed in the CUSTOMER UNIT M parameter. The measured value is displayed with the additional text "User Unit". **Factory setting:** _ _ _ _ _ _ _ _
CUST. UNIT FACT. M (703) Entry	Enter conversion factor for a customer-specific mass unit. The conversion factor must be entered in relation to the SI unit "kg". → See also CUSTOMER UNIT M. **Prerequisite:** ▪ COMB. MEASURAND = Height and Mass, MASS UNIT = User unit ▪ COMB. MEASURAND = %-Height and Mass, MASS UNIT = User unit **Example:** – You want the measured value to be displayed in "buckets". – MEASURED VALUE = 10 kg ≙ 1 bucket – Entry CUSTOMER UNIT M: bucket – Entry CUST. UNIT FACT. M: 0.1 – Result: MEASURED VALUE = 1 bucket **Factory setting:** 1.0

Table 13: (GROUP SELECTION →) OPERATING MENU → SETTINGS → BASIC SETUP "Level", LEVEL MODE "Height Linearized"	
Parameter name	**Description**
LEVEL MIN (755) Entry	Enter the minimum level to be expected. The input limits for the calibration (editing limits) are derived from the value entered. The closer the value entered corresponds to the minimum level to be expected, the more accurate the measurement result. ▪ The following applies for the setting LEVEL MODE "Height Linearized" and ASSIGN CURRENT "Linear": If you enter a new value for LEVEL MIN, the value for SET LRV is also changed. Use SET LRV to assign a height to the lower current value. If you want to assign the lower current value a value other than that for LEVEL MIN, you must enter the desired value for SET LRV. (→ SET LRV, Page 102 and ASSIGN CURRENT, Page 114) **Factory setting:** 0.0
LEVEL MAX (712) Entry	Enter the maximum level to be expected. The input limits for the calibration (editing limits) are derived from the value entered. The closer the value entered corresponds to the maximum level to be expected, the more accurate the measurement result. ▪ The following applies for the setting LEVEL MODE "Height Linearized" and ASSIGN CURRENT "Linear": If you enter a new value for LEVEL MAX, the value for SET URV is also changed. Use SET URV to assign a height to the upper current value. If you want to assign the upper current value a value other than that for LEVEL MAX, you must enter the desired value for SET URV. (→ SET URV, Page 102 and ASSIGN CURRENT, Page 114) **Factory setting:** 100.0
CALIBRATION MODE (392) Selection	Select the calibration mode for the calibration of the 1st measured variable. **Options:** ▪ Wet Wet calibration takes place by filling the container. This calibration mode requires two pressure-level value pairs to be entered. In the case of two different levels, the level value is entered and the pressure measured at this moment is assigned to the level value. → See also the following parameter description for EMPTY CALIB., EMPTY PRESSURE, FULL CALIB. and FULL PRESSURE. ▪ Dry Dry calibration is a theoretical calibration which you can carry out even if the device is not mounted or the container is empty. – For the "Level" measured variable, the density of the fluid (→ see Page 94, ADJUST DENSITY) must be entered. – For the "%" measured variable, the density of the fluid must be entered and a level assigned to the 100 % point (→ see Page 94, ADJUST DENSITY and 100% POINT). If the measurement should not start at the mounting location of the device, a level offset must be entered (→ see Page 96, ZERO POSITION). If the change to dry calibration is made after a wet calibration, the density must be entered correctly using the ADJUST DENSITY and DENSITY PROCESS parameter before changing the calibration mode. → See also Page 101. **Factory setting:** Wet
EMPTY CALIB. (314) Entry	Enter level value for the lower calibration point (container empty). The container is either empty or part full. By entering a value for this parameter, you are assigning a level value to the pressure present at the device. → See also EMPTY PRESSURE. **Prerequisite:** ▪ CALIBRATION MODE = Wet **Factory setting:** 0.0

Table 13: (GROUP SELECTION →) OPERATING MENU → SETTINGS → BASIC SETUP "Level", LEVEL MODE "Height Linearized"	
Parameter name	**Description**
EMPTY PRESSURE (710) Display	Displays the pressure value for the lower calibration point (container empty). → See also EMPTY CALIB. **Prerequisite:** ▪ CALIBRATION MODE = Wet
FULL CALIB. (315) Entry	Enter level value for the upper calibration point (container full). The container is either completely or almost full. By entering a value for this parameter, you are assigning a level value to the pressure present at the device. → See also FULL PRESSURE. **Prerequisite:** ▪ CALIBRATION MODE = Wet **Factory setting:** 100.0
FULL PRESSURE (711) Display	Displays the pressure value for the upper calibration point (container full). → See also FULL CALIB. **Prerequisite:** ▪ CALIBRATION MODE = Wet **Factory setting:** High sensor limit (→ see PRESS. SENS HILIM, Page 120)
ADJUSTED DENSITY (810) Display	Displays the density calculated from the upper and lower level point. **Prerequisite:** ▪ COMB. MEASURAND = Height and Volume, CALIBRATION MODE = Wet ▪ COMB. MEASURAND = Height and Mass, CALIBRATION MODE = Wet ▪ COMB. MEASURAND = Height and %, CALIBRATION MODE = Wet
DENSITY UNIT (812) Selection	Select density unit. **Prerequisite:** ▪ COMB. MEASURAND = %-Height and %, CALIBRATION MODE = Dry ▪ COMB. MEASURAND = %-Height and Volume, CALIBRATION MODE = Dry ▪ COMB. MEASURAND = %-Height and Mass, CALIBRATION MODE = Dry ▪ COMB. MEASURAND = Height and %, CALIBRATION MODE = Dry ▪ COMB. MEASURAND = Height and Volume, CALIBRATION MODE = Dry ▪ COMB. MEASURAND = Height and Mass, CALIBRATION MODE = Dry **Options:** ▪ g/cm^3 ▪ kg/dm^3 ▪ kg/m^3 ▪ US lb/in^3 ▪ US lb/ft^3 **Factory setting:** kg/dm^3
ADJUST DENSITY (316) Entry	Enter density of fluid. **Prerequisite:** ▪ CALIBRATION MODE = Dry **Factory setting:** 1.0 (kg/dm^3)

Table 13: (GROUP SELECTION →) OPERATING MENU → SETTINGS → BASIC SETUP "Level", LEVEL MODE "Height Linearized"	
Parameter name	**Description**
HEIGHT UNIT (708) Selection	Select level unit. **Prerequisite:** ▪ COMB. MEASURAND = %-Height and Volume, CALIBRATION MODE = Dry ▪ COMB. MEASURAND = %-Height and Mass, CALIBRATION MODE = Dry ▪ COMB. MEASURAND = %-Height + %, CALIBRATION MODE = Dry **Options:** ▪ mm ▪ dm ▪ cm ▪ m ▪ inch ▪ ft ▪ User unit, → see also the following parameter description for CUSTOMER UNIT H and CUST. UNIT FACT. H. **Factory setting:** m
CUSTOMER UNIT H (706) Entry	Enter text (unit) for customer-specific level unit. You can enter a maximum of eight alphanumeric characters here. → See also CUST. UNIT FACT. H. **Prerequisite:** ▪ COMB. MEASURAND = %-Height and Volume, CALIBRATION MODE = Dry, HEIGHT UNIT = User unit ▪ COMB. MEASURAND = %-Height and Mass, CALIBRATION MODE = Dry, HEIGHT UNIT = User unit ▪ COMB. MEASURAND = %-Height and %, CALIBRATION MODE = Dry, HEIGHT UNIT = User unit Only the first five characters are shown on the on-site display. For example, if "crates" is specified as the customer-specific unit, "crate" is displayed. If the unit contains a slash, up to eight characters can be shown on the on-site display. The maximum number of characters in the counter is again limited to five. For example, if "crates/m2" is specified as the customer-specific unit, "crate/m2" is displayed. In the FieldCare, all eight characters are displayed. In the HART handheld terminal, the customer-specific unit is only displayed in the CUSTOMER UNIT H parameter. The measured value is displayed with the additional text "User Unit". **Factory setting:** – – – – – – – –
CUST. UNIT FACT. H (705) Entry	Enter conversion factor for a customer-specific level unit. The conversion factor must be entered in relation to the SI unit "m". → See also CUSTOMER UNIT H. **Prerequisite:** ▪ COMB. MEASURAND = %-Height and Volume, CALIBRATION MODE = Dry, HEIGHT UNIT = User unit ▪ COMB. MEASURAND = %-Height and Mass, CALIBRATION MODE = Dry, HEIGHT UNIT = User unit ▪ COMB. MEASURAND = %-Height and %, CALIBRATION MODE = Dry, HEIGHT UNIT = User unit **Example:** – You want the measured value to be displayed in "PU" (PU: packing unit). – MEASURED VALUE = 0.5 m (1.6 ft) ≙ 1 PU – Entry CUSTOMER UNIT H: PU – Entry CUST. UNIT FACT. H: 2 – Result: MEASURED VALUE = 1 PU **Factory setting:** 1.0

Table 13: (GROUP SELECTION →) OPERATING MENU → SETTINGS → BASIC SETUP "Level", LEVEL MODE "Height Linearized"	
Parameter name	**Description**
100% POINT (813) Entry	Enter level value for 100% point. **Prerequisite:** ▪ COMB. MEASURAND = %-Height and Volume, CALIBRATION MODE = Dry ▪ COMB. MEASURAND = %-Height and Mass, CALIBRATION MODE = Dry ▪ COMB. MEASURAND = %-Height + %, CALIBRATION MODE = Dry **Example:** – The 100 %-point should correspond to 4 m (13 ft). – Select the "m" unit via the HEIGHT UNIT parameter. – Enter the value "4" for this parameter (100% POINT). **Factory setting:** 1.0
ZERO POSITION (814) Entry	Enter value for level offset. If the measurement should not start at the mounting location of the device, e.g. for containers with a sump, carry out zero point shift (level offset). **Prerequisite:** ▪ CALIBRATION MODE = Dry 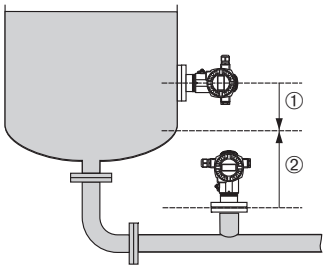 *Fig. 22: Zero point shift* *1 Device is mounted above the level lower range value: a positive value has to be entered for ZERO POSITION.* *2 Device is mounted below the level lower range value: a negative value has to be entered for ZERO POSITION.* **Factory setting:** 0.0
DAMPING VALUE (247) Entry	Enter damping time (time constant τ). The damping affects the speed at which all subsequent elements, such as the on-site display, measured value and current output react to a change in the pressure. **Input range:** 0.0...999.0 s **Factory setting:** 2.0 s or as per order specifications

Table 14: (GROUP SELECTION →) OPERATING MENU → SETTINGS → BASIC SETUP "Flow"	
Parameter name	**Description**
Prerequisite: ▪ MEASURING MODE = Flow	

Table 14: (GROUP SELECTION →) OPERATING MENU → SETTINGS → BASIC SETUP "Flow"	
Parameter name	**Description**
PRESS. ENG. UNIT (060) Selection	Select pressure unit. If a new pressure unit is selected, all pressure-specific parameters are converted and displayed with the new unit. **Options:** ▪ mbar, bar ▪ mmH2O, mH2O, inH2O, ftH2O 1) ▪ Pa, hPa, kPa, MPa ▪ psi ▪ mmHg, inHg 2) ▪ Torr ▪ g/cm^2, kg/cm^2 ▪ lb/ft^2 ▪ atm ▪ gf/cm^2, kgf/cm^2 ▪ User unit, → See also the following parameter description for CUSTOMER UNIT P and CUST. UNIT FACT. P. 1) The conversion factor of the pressure units refers to a reference temperature of 4 °C (39.2 °F). 2) The conversion factor of the pressure units refers to a reference temperature of 0 °C (32 °F). **Factory setting:** Depends on the sensor nominal measuring range mbar or bar or as per order specifications
CUSTOMER UNIT P (075) Entry	Enter text (unit) for customer-specific pressure unit. You can enter a maximum of eight alphanumeric characters here. → See also CUST. UNIT FACT. P. **Prerequisite:** ▪ PRESS. ENG. UNIT = User unit Only the first five characters are shown on the on-site display. For example, if "crates" is specified as the customer-specific unit, "crate" is displayed. If the unit contains a slash, up to eight characters can be shown on the on-site display. The maximum number of characters in the counter is again limited to five. For example, if "crates/m2" is specified as the customer-specific unit, "crate/m2" is displayed. In the FieldCare, all eight characters are displayed. In the HART handheld terminal, the customer-specific unit is only displayed in the CUSTOMER UNIT P parameter. The measured value is displayed with the additional text "User Unit". **Factory setting:** _ _ _ _ _ _ _ _
CUST. UNIT FACT. P (317) Entry	Enter conversion factor for a customer-specific pressure unit. The conversion factor must be entered in relation to the SI unit "Pa". → See also CUSTOMER UNIT P. **Prerequisite:** ▪ PRESS. ENG. UNIT = User unit **Example:** – You want the measured value to be displayed in "PU" (PU: packing unit). – MEASURED VALUE =10000 Pa ≙ 1 PU – Entry CUSTOMER UNIT P: PU – Entry CUST. UNIT FACT. P: 0.0001 – Result: MEASURED VALUE = 1 PU **Factory setting:** 1.0

Table 14: (GROUP SELECTION →) OPERATING MENU → SETTINGS → BASIC SETUP "Flow"	
Parameter name	**Description**
FLOW-MEAS. TYPE (640) Selection	Select the flow type. **Options:** ▪ Volume p. cond. (volume under operating conditions) ▪ Vol. norm. cond. (norm volume under norm conditions in Europe: 1013.25 mbar and 273.15 K (0°C)) ▪ Vol. std. cond. (standard volume under standard conditions in USA: 1013.25 mbar (14.7 psi) and 288.15 K (15°C/59°F)) ▪ Mass (mass under operating conditions) **Factory setting:** Volume p. cond.
UNIT FLOW (391) Selection	Select volume flow unit. When a new flow unit is selected, all flow-specific parameters are converted and displayed with the new unit within a flow mode (FLOW-MEAS. TYPE). When the flow mode is changed, conversion is not possible. **Prerequisite:** ▪ FLOW-MEAS. TYPE = Volume p. cond. **Options:** ▪ m3/s, m3/min, m3/h, m3/day ▪ l/s, l/min, l/h ▪ hl/s, hl/min, hl/day ▪ ft3/s, ft3/min, ft3/h, ft3/day ▪ ACFS, ACFM, ACFH, ACFD ▪ ozf/s, ozf/min ▪ US Gal/s, US Gal/min, US Gal/h, US Gal/day ▪ Imp. Gal/s, Imp. Gal/min, Imp. Gal/h ▪ bbl/s, bbl/min, bbl/h, bbl/day ▪ User unit, → see also this table, parameter description for CUSTOMER UNIT F and CUST. UNIT FACT. F **Factory setting:** m^3/s
NORM FLOW UNIT (661) Selection	Select norm volume flow unit. When a new flow unit is selected, all flow-specific parameters are converted and displayed with the new unit within a flow mode (FLOW-MEAS. TYPE). When the flow mode is changed, conversion is not possible. **Prerequisite:** ▪ FLOW-MEAS. TYPE = Vol. norm conditions **Options:** ▪ Nm3/s, Nm3/min, Nm3/h, Nm3/day ▪ User unit, → see also this table, parameter description for CUSTOMER UNIT F and CUST. UNIT FACT. F **Factory setting:** Nm^3/s
STD. FLOW UNIT (660) Selection	Select standard volume flow unit. When a new flow unit is selected, all flow-specific parameters are converted and displayed with the new unit within a flow mode (FLOW-MEAS. TYPE). When the flow mode is changed, conversion is not possible. **Prerequisite:** ▪ FLOW-MEAS. TYPE = Vol. std. conditions **Options:** ▪ Sm3/s, Sm3/min, Sm3/h, Sm3/day ▪ SCFS, SCFM, SCFH, SCFD ▪ User unit, → see also this table, parameter description for CUSTOMER UNIT F and CUST. UNIT FACT. F **Factory setting:** Sm^3/s

Table 14: (GROUP SELECTION →) OPERATING MENU → SETTINGS → BASIC SETUP "Flow"	
Parameter name	**Description**
MASS FLOW UNIT (571) Selection	Select mass flow unit. When a new flow unit is selected, all flow-specific parameters are converted and displayed with the new unit within a flow mode (FLOW-MEAS. TYPE). When the flow mode is changed, conversion is not possible. **Prerequisite:** ▪ FLOW-MEAS. TYPE = Mass **Options:** ▪ g/s, kg/s, kg/min, kg/min, kg/h ▪ t/s, t/min, t/h, t/day ▪ oz/s, oz/min ▪ lb/s, lb/min, lb/h ▪ ton/s, ton/min, ton/h, ton/day ▪ User unit, → see also the following parameter description for CUSTOMER UNIT F and CUST. UNIT FACT. F **Factory setting:** kg/s
CUSTOMER UNIT F (610) Entry	Enter text (unit) for customer-specific flow unit. You can enter a maximum of eight alphanumeric characters here. → See also CUST. UNIT FACT. F. **Prerequisite:** ▪ UNIT FLOW = User unit ▪ NORM FLOW UNIT = User unit ▪ STD. FLOW UNIT = User unit ▪ MASS FLOW UNIT = User unit Only the first five characters are shown on the on-site display. For example, if "crates" is specified as the customer-specific unit, "crate" is displayed. If the unit contains a slash, up to eight characters can be shown on the on-site display. The maximum number of characters in the counter is again limited to five. For example, if "crates/m2" is specified as the customer-specific unit, "crate/m2" is displayed. In the FieldCare, all eight characters are displayed. In the HART handheld terminal, the customer-specific unit is only displayed in the CUSTOMER UNIT F parameter. The measured value is displayed with the additional text "User Unit". **Factory setting:** – – – – – – – –
CUST. UNIT FACT. F (609) Entry	Enter conversion factor for a customer-specific flow unit. The conversion factor must be entered in relation to an appropriate SI unit, e.g. m^3/s for the "Volume p. cond." flow mode. → See also CUSTOMER UNIT F. **Prerequisite:** ▪ UNIT FLOW = User unit ▪ NORM FLOW UNIT = User unit ▪ STD. FLOW UNIT = User unit ▪ MASS FLOW UNIT = User unit **Example:** – You want the measured value to be displayed in "bucket/h". – MEASURED VALUE =0.01 m3/s ≙ 3600 bucket/h – Entry CUSTOMER UNIT F: bucket/h – Entry CUST. UNIT FACT. F: 360000 – Result: MEASURED VALUE = 3600 bucket/h **Factory setting:** 1.0

Table 14: (GROUP SELECTION →) OPERATING MENU → SETTINGS → BASIC SETUP "Flow"	
Parameter name	**Description**
MAX. FLOW (311) Entry	Enter maximum flow of primary element. → See also layout sheet of primary element. The maximum flow is assigned to the maximum pressure which you enter via MAX PRESS. FLOW. Use the LINEAR/SQROOT parameter (→ Page 114) to specify the current signal for the "Flow" measuring mode. The following applies for the "Flow (square root)" setting: If you enter a new value for MAX. FLOW, the value for SET URV is also changed. Use SET URV to assign a flow to the upper current value. If you want to assign the upper current value a value other than that for MAX. FLOW, you must enter the desired value for SET URV. (→ SET URV, Page 104). **Factory setting:** 1.0
MAX PRESS. FLOW (634) Entry	Enter maximum pressure of primary element. → See layout sheet of primary element. This value is assigned to the maximum flow value (→ see MAX. FLOW). Use the LINEAR/SQROOT parameter (→ Page 114) to specify the current signal for the "Flow" measuring mode. The following applies for the "Differential pres." setting: If you enter a new value for MAX PRESS. FLOW, the value for SET URV is also changed. Use SET URV to assign a pressure value to the upper current value. If you want to assign the upper current value a value other than that for MAX PRESS. FLOW, you must enter the desired value for SET URV. (→ SET URV, Page 104). **Factory setting:** High sensor limit (→ see PRESS. SENS HILIM, Page 120)
DAMPING VALUE (247) Entry	Enter damping time (time constant τ). The damping affects the speed at which all subsequent elements, such as the on-site display, measured value and current output react to a change in the pressure. **Input range:** 0.0...999.0 s **Factory setting:** 2.0 s or as per order specifications

Table 15: (GROUP SELECTION →) OPERATING MENU → SETTINGS → EXTENDED SETUP "Pressure"	
Parameter name	**Description**
Prerequisite: ▪ MEASURING MODE = Pressure	
TEMP. ENG. UNIT (318) Selection	Select the unit for the temperature measured values. → See also PCB TEMPERATURE (Page 117) and SENSOR TEMP. (Page 121). **Options:** ▪ °C ▪ °F ▪ K ▪ R **Factory setting:** °C

Table 16: (GROUP SELECTION →) OPERATING MENU → SETTINGS → EXTENDED SETUP "Level"	
Parameter name	**Description**
Prerequisite: ▪ MEASURING MODE = Level	

Table 16: (GROUP SELECTION →) OPERATING MENU → SETTINGS → EXTENDED SETUP "Level"	
Parameter name	**Description**
TEMP. ENG. UNIT (318) Selection	Select the unit for the temperature measured values. → See also PCB TEMPERATURE (Page 117) and SENSOR TEMP. (Page 122). **Options:** ▪ °C ▪ °F ▪ K ▪ R **Factory setting:** °C
DENSITY UNIT (001)/ (812) Options	Select density unit. **Options:** ▪ g/cm^3 ▪ kg/dm^3 ▪ kg/m^3 ▪ US lb/in^3 ▪ US lb/ft^3 **Factory setting:** kg/dm^3
ADJUST DENSITY (007)/(316) Entry	Enter density of fluid. **⚠ CAUTION** **Note Dependencies when setting parameters!** ▶ LIN. MEASURAND: "% (Level)", "Mass" and "Volume" and MEASUAND KOMB.: If a change to dry calibration is made after a wet calibration using the CALIBRATION MODE parameter (→ Page 82 or 93), the density for this parameter must be entered correctly before changing the calibration mode. ▶ In the event that the pressure falls with increasing levels (LIN. MEASURED: Volume), such as in the case of a residual volume measurement, a negative value shall be entered for this parameter. **Factory setting:** 1.0 (kg/dm^3)
PROCESS DENSITY (025)/(811) Entry	Enter a new density value for density correction. The calibration was carried out with the medium water, for example. Now the container is to be used for another fluid with another density. The calibration is corrected appropriately by entering the new density value in the PROCESS DENSITY parameter. LIN. MEASURAND: "% (Level)", "Mass" and "Volume" and MEASUAND KOMB.: If a change to dry calibration is made after a wet calibration using the CALIBRATION MODE parameter (→ Page 82 or 93), the density for this parameter must be entered correctly before changing the calibration mode. In the event that the pressure falls with increasing levels (LIN. MEASURED: Volume), such as in the case of a residual volume measurement, a negative value shall be entered for this parameter. **Factory setting:** 1.0

Table 16: (GROUP SELECTION →) OPERATING MENU → SETTINGS → EXTENDED SETUP "Level"	
Parameter name	**Description**
SET LRV (762) Entry	Enter value for the lower current value (4 mA). **Prerequisite:** ▪ LEVEL MODE = Pressure Linearized or Height Linearized ▪ For the LEVEL MODE "Height Linearized", you can use the ASSIGN CURRENT parameter (→ Page 114) to specify whether the current output should depict the 1st or 2nd measured variable (height or tank content). Depending on the setting of the ASSIGN CURRENT parameter, enter the following value for SET LRV: – ASSIGN CURRENT = tank content (factory setting) ⇒ %- value, volume value or mass value – ASSIGN CURRENT = height ⇒ level value The following applies for the LEVEL MODE "Pressure Linearized" or LEVEL MODE "Height Linearized" + ASSIGN CURRENT "Tank content": ▪ If you enter a new value for TANK CONTENT MIN, the value for SET LRV is also changed. If you want to assign the lower current value a value other than that for TANK CONTENT MIN, you must enter the desired value for SET LRV. (→ TANK CONTENT MIN, Page 104 or 107.) The following applies for the LEVEL MODE "Height Linearized" + ASSIGN CURRENT "Height": ▪ If you enter a new value for LEVEL MIN, the value for SET LRV is also changed. If you want to assign the lower current value a value other than that for LEVEL MIN, you must enter the desired value for SET LRV. (→ LEVEL MIN, Page 93.) **Factory setting:** 0.0
SET URV (763) Entry	Enter value for the upper current value (20 mA). **Prerequisite:** ▪ LEVEL MODE = Pressure Linearized or Height Linearized ▪ For the LEVEL MODE "Height Linearized", you can use the ASSIGN CURRENT parameter (→ Page 114) to specify whether the current output should depict the 1st or 2nd measured variable (height or tank content). Depending on the setting of the ASSIGN CURRENT parameter, enter the following value for SET URV: – ASSIGN CURRENT = tank content (factory setting) ⇒ %- value, volume value or mass value – ASSIGN CURRENT = height ⇒ level value The following applies for the LEVEL MODE "Pressure Linearized" or LEVEL MODE "Height Linearized" + ASSIGN CURRENT "Tank content": ▪ If you enter a new value for TANK CONTENT MAX, the value for SET URV is also changed. If you want to assign the upper current value a value other than that for TANK CONTENT MAX, you must enter the desired value for SET URV. (→ TANK CONTENT MAX, Page 104 or 107.) The following applies for the LEVEL MODE "Height Linearized" + ASSIGN CURRENT "Height": ▪ If you enter a new value for LEVEL MAX, the value for SET URV is also changed. If you want to assign the lower current value a value other than that for LEVEL MAX, you must enter the desired value for SET URV. (→ LEVEL MAX, Page 93.) **Factory setting:** 100.0

Table 17: (GROUP SELECTION →) OPERATING MENU → SETTINGS → EXTENDED SETUP "Flow"	
Parameter name	**Description**
Prerequisite: ▪ MEASURING MODE = Flow	

Table 17: (GROUP SELECTION →) OPERATING MENU → SETTINGS → EXTENDED SETUP "Flow"	
Parameter name	**Description**
TEMP. ENG. UNIT (318) Selection	Select the unit for the temperature measured value. → See also PCB TEMPERATURE (Page 117) and SENSOR TEMP. (Page 123). **Options:** ▪ °C ▪ °F ▪ K ▪ R **Factory setting:** °C
LOW FLOW CUT-OFF (442) Selection	Switches "low flow cut-off" function on and off. In the lower measuring range, small flow quantities (creepages) can lead to large measured value fluctuations. Switching on this function stops these flow quantities from being recorded. → See also SET. L. FL. CUT-OFF. **Options:** ▪ Off ▪ On **Factory setting:** Off
SET. L. FL. CUT-OFF (323) Entry	Enter switch-off point of low flow cut-off. The hysteresis between the switch-on point and the switch-off point is always 1 % of the end flow value. → See also LOW FLOW CUT-OFF. **Prerequisite:** ▪ LOW FLOW CUT-OFF = on **Input range:** Switch-off point: 0...50 % of end flow value (→ MAX. FLOW). 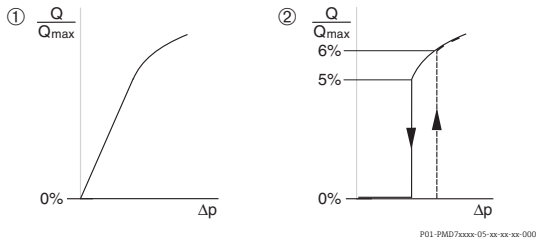 **Factory setting:** 5 % (of end flow value)
SET LRV (637) Entry	Depending on the setting in the LINEAR/SQROOT parameter (→ Page 114), enter a flow value or a pressure value for the lower current value (4 mA) here. ▪ LINEAR/SQROOT = Flow (square root) (factory setting) ⇒ flow value ▪ LINEAR/SQROOT = Differential pres. ⇒ pressure value **Factory setting:** 0

Table 17: (GROUP SELECTION →) OPERATING MENU → SETTINGS → EXTENDED SETUP "Flow"	
Parameter name	**Description**
SET URV (638) Entry	Depending on the setting in the LINEAR/SQROOT parameter (→ Page 114), enter a flow value or a pressure value for the upper current value (20 mA) here. ▪ LINEAR/SQROOT = Flow (square root) (factory setting) ⇒ flow value ▪ LINEAR/SQROOT = Differential pres. ⇒ pressure value The following applies for the setting LINEAR/SQROOT "Flow (square root)": ▪ If you enter a new value for MAX. FLOW, the value for SET URV is also changed. If you want to assign the upper current value a value other than that for MAX. FLOW, you must enter the desired value for SET URV. (→ MAX. FLOW, Page 100). The following applies for the setting LINEAR/SQROOT "Differential pres.": ▪ If you enter a new value for MAX PRESS. FLOW, the SET URV value is also changed. If you want to assign the upper current value a value other than that for MAX PRESS. FLOW, you must enter the desired value for SET URV. (→ MAX PRESS. FLOW, Page 100). **Factory setting:** MAX. FLOW

Table 18: (GROUP SELECTION →) OPERATING MENU → SETTINGS → LINEARISATION – on-site operation	
Parameter name	**Description**
Prerequisite: ▪ MEASURING MODE = Level ▪ LEVEL MODE = Pressure Linearized or Height Linearized	
TANK CONTENT MIN (759) Entry	Enter the minimum tank contents to be expected. The input limits for the calibration (editing limits) are derived from the value entered. The closer the value entered corresponds to the minimum tank content to be expected, the more accurate the measurement result. ▪ If you enter a new value for TANK CONTENT MIN, the value for SET LRV is also changed. Use SET LRV to assign a %-value, volume value or mass value to the lower current value. If you want to assign the lower current value a value other than that for TANK CONTENT MIN, you must enter the desired value for SET LRV. (→ SET LRV, Page 102). ▪ For the setting LEVEL MODE "Height Linearized" and ASSIGN CURRENT "Linear", the TANK CONTENT MIN parameter does not affect the SET LRV parameter. (→ SET LRV, Page 102 and ASSIGN CURRENT, Page 114) **Factory setting:** 0.0
TANK CONTENT MAX (713) Entry	Enter the maximum tank contents to be expected. The input limits for the subsequent calibration (editing limits) are derived from the value entered. The closer the value entered corresponds to the maximum tank content to be expected, the more accurate the measurement result. ▪ If you enter a new value for TANK CONTENT MAX, the value for SET URV is also changed. Use SET URV to assign a %-value, volume value or mass value to the upper current value. If you want to assign the upper current value a value other than that for TANK CONTENT MAX, you must enter the desired value for SET URV. (→ SET URV, Page 102.) ▪ For the setting LEVEL MODE "Height Linearized" and ASSIGN CURRENT "Linear", the TANK CONTENT MAX parameter does not affect the SET URV parameter. (→ SET URV, Page 102 and ASSIGN CURRENT, Page 114) **Factory setting:** 100.0

Table 18: (GROUP SELECTION →) OPERATING MENU → SETTINGS → LINEARISATION – on-site operation

Parameter name	Description
TABLE SELECTION (808) Selection	Select table. The device works with a measuring and an editor table. The measuring table is used to calculate the measured value. To make sure measuring also runs properly when entering a new table, there is another table, the editor table, for entering new values. **Options:** ▪ View meas. table ▪ Editor table **Factory setting:** View meas. table
LIN. EDIT MODE (397) Selection	Select the entry mode for the linearisation table. **Prerequisite:** ▪ TABLE SELECTION = Editor table **Options:** ▪ Manual: the container neither has to be filled nor emptied for this entry mode. Enter the value pairs for the linearisation table. ▪ Semiautomatic: the container is filled or emptied in stages in this entry mode. The device automatically records the hydrostatic pressure. The associated volume, mass or %-value is entered. **Factory setting:** Manual
EDITOR TABLE (809) Selection	Select table. **Prerequisite:** ▪ TABLE SELECTION = editor table **Options:** ▪ New table: enter new linearisation table. ▪ Edit measure table: The measuring table is loaded as an editor table so that changes can be made. → See also TAB. SELECTION ▪ Continue edit: Edit an editor table that already exists. → See also TABLE EDITOR (770) **Factory setting:** New table
EDITOR TABLE Entry ("Semiautomatic" edit mode) – LINE-NUMB (549) – Y-VAL. (551)	Enter table in the "Semiautomatic" editing mode. A linearisation table must have at least 2 points and may not have more than 32 points. A point consists of LINE-NUMB, X-VAL. and Y-VAL. For this editing mode, the container is filled or emptied in stages. **Example:** Enter point for LEVEL MODE = Pressure Linearized – LINE-NUMB: confirm value displayed. – Y-VAL.: depending on the setting in the LINd. MEASURAND parameter, enter the volume, mass or % value. – X-VAL.: the hydrostatic pressure present is displayed and saved by confirming the Y-value. **Example:** Enter point for LEVEL MODE = Height Linearized – LINE-NUMB: confirm value displayed. – Y-VAL.: depending on the setting in the COMB. MEASURAND parameter, enter the volume, mass or % value. – X-VAL.: the hydrostatic pressure present is measured. Depending on the setting in the COMB. MEASURAND parameter, the measured pressure is converted to a level unit or a % and displayed. The value is saved by confirming the Y-value. **Factory setting:** LINE-NUMB = 1, X-VAL. = 0.0, Y-VAL. = 0.0

Table 18: (GROUP SELECTION →) OPERATING MENU → SETTINGS → LINEARISATION – on-site operation	
Parameter name	**Description**
EDITOR TABLE Entry ("manual" edit mode) – LINE-NUMB (549) – Y-VAL. (551) – X-VAL. (550)	Enter table in the "manual" editing mode. A linearisation table must have at least 2 points and may not have more than 32 points. A point consists of a line number, X-value and Y-value. The container neither has to be filled nor emptied for this editing mode. **Example:** Enter point for LEVEL MODE = Pressure Linearized – LINE-NUMB: confirm value displayed. – X-VAL.: enter pressure value. – Y-VAL.: depending on the setting in the LINd. MEASURAND parameter, enter the related volume, mass or % value. **Example:** Enter point for LEVEL MODE = Height Linearized – LINE-NUMB: confirm value displayed. – X-VAL.: the hydrostatic pressure present is measured. Depending on the setting in the COMB. MEASURAND parameter, enter a level value or % value. – Y-VAL.: depending on the setting in the COMB. MEASURAND parameter, enter the related volume, mass or % value. **Factory setting:** LINE-NUMB = 1, X-VAL. = 0.0, Y-VAL. = 0.0
EDITOR TABLE (770) Options	Select the function for the editor table. **Options:** ▪ Next point: enter next point. ▪ Last input point: jump back to previous point to correct a mistake for example. ▪ Accept input table: save editor table as measuring table. This overwrites the old measuring table. ▪ Abort: save values entered up to this point for the editor table and display next parameter. The editor table is not activated as a measuring table. ▪ Insert point: see example below. ▪ Delete point: the current point is deleted. See example below. **Example:** Add point, in this case between the 4th and 5th point for example – Select point 5 via the EDITOR TABLE/LINE NUMB parameter. – Confirm current X and Y values with Enter. – Using the TABLE EDITOR (770) parameter, select the option "Insert point". – Point 5 is displayed for the TABLE EDITOR/LINE NUMB parameter. New values for the X-VAL and Y-VAL parameters. **Example:** delete point, in this case the 5th point for example – Select point 5 via the EDITOR TABLE/LINE NUMB parameter. – Using the TABLE EDITOR (770) parameter, select the option "Delete point". – The 5th point is deleted. All of the following points are pushed up one number i.e. following deletion, the 6th point becomes Point 5. **Factory setting:** Next point
MEASURING TABLE (549) Display	A point of the linearisation table saved (measuring table) appears on the display The parameter first displays the first point of the linearisation table. By entering a line number, you can directly display the corresponding point in the linearisation table.
MEASURING TABLE (717) Selection	Select the function for the measuring table. **Options:** ▪ Next point: view next point of the measuring table. ▪ Last input point: view previous point of the measuring table. ▪ Abort: cancel measuring table display. Display next parameter. **Factory setting:** Next point
TANK DESCRIPTION (815) Entry	Enter tank description. (max. 32 alphanumeric characters) **Factory setting:** _

Table 19: (GROUP SELECTION →) OPERATING MENU → SETTINGS → LINEARISATION – Digital communication	
Parameter name	**Description**
Prerequisite: ▪ MEASURING MODE = Level ▪ LEVEL MODE = Pressure Linearized or Height Linearized	
TANK CONTENT MIN Entry	Enter the minimum tank contents to be expected. The input limits for the calibration (editing limits) are derived from the value entered. The closer the value entered corresponds to the minimum tank content to be expected, the more accurate the measurement result. ▪ If you enter a new value for TANK CONTENT MIN, the value for SET LRV is also changed. Use SET LRV to assign a %-value, volume value or mass value to the lower current value. If you want to assign the lower current value a value other than that for TANK CONTENT MIN, you must enter the desired value for SET LRV. (→ SET LRV, Page 102). ▪ For the setting LEVEL MODE "Height Linearized" and ASSIGN CURRENT "Linear", the TANK CONTENT MIN parameter does not affect the SET LRV parameter. (→ SET LRV, Page 102 and ASSIGN CURRENT, Page 114) **Factory setting:** 0.0
TANK CONTENT MAX Entry	Enter the maximum tank contents to be expected. The input limits for the subsequent calibration (editing limits) are derived from the value entered. The closer the value entered corresponds to the maximum tank content to be expected, the more accurate the measurement result. ▪ If you enter a new value for TANK CONTENT MAX, the value for SET URV is also changed. Use SET URV to assign a %-value, volume value or mass value to the upper current value. If you want to assign the upper current value a value other than that for TANK CONTENT MAX, you must enter the desired value for SET URV. (→ SET URV, Page 102.) ▪ For the setting LEVEL MODE "Height Linearized" and ASSIGN CURRENT "Linear", the TANK CONTENT MAX parameter does not affect the SET URV parameter. (→ SET URV, Page 102 and ASSIGN CURRENT, Page 114) **Factory setting:** 100.0
TABLE SELECTION Selection	Select table. The device works with a measuring and an editor table. The measuring table is used to calculate the measured value. To make sure measuring also runs properly when entering a new table, there is another table, the editor table, for entering new values. **Options:** ▪ View meas. table ▪ Editor table **Factory setting:** View meas. table
LIN. EDIT MODE Selection	Select the entry mode for the linearisation table. **Prerequisite:** ▪ TABLE SELECTION = Editor table **Options:** ▪ Manual: The container neither has to be filled nor emptied for this entry mode. Enter the value pairs for the linearisation table. ▪ Semiautomatic: the container is filled or emptied in stages in this entry mode. The device automatically records the hydrostatic pressure. The associated volume, mass or %-value is entered. **Factory setting:** Manual

Table 19: (GROUP SELECTION →) OPERATING MENU → SETTINGS → LINEARISATION – Digital communication	
Parameter name	**Description**
EDITOR TABLE Selection	Select table. **Prerequisite:** ▪ TABLE SELECTION = Editor table **Options:** ▪ New table: Enter new linearisation table. ▪ View meas. table: View saved linearisation table and change points if necessary. ▪ Continue edit: Edit a linearisation table that already exists. Operating program: ▪ If you select the "View meas. table" option, the saved measuring table is loaded in the operating priogram. Use the "Lin.-Tab." window to view the entire table, change values if necessary and write the modified table to the device. ▪ If you change a value via the X-VAL. or Y-VAL. parameters, the table in the "Lin.-Tab." window is not updated. To view the table saved in the device, this table must first be read out of the device. **Factory setting:** New table
LINE-NUMB Entry	Enter the line number for the linearisation table. A linearisation table must have at least 2 points and may not have more than 32 points. ▪ TABLE SELECTION = View meas. table Via this parameter you can select the point of the linearisation table which should be displayed. ▪ TABLE SELECTION = Editor table Enter a point via the LINE-NUMB, X-VAL. and Y-VAL. parameters. → See also this table, parameter description for LIN. EDIT MODE, X-VAL. ("Manual" entry mode), X-VAL. ("Semiautomatic" entry mode) and Y-VAL. In the operating program, you can enter a complete linearisation table (Menu "Device Operation" → "Device Functions" → "Additional Functions" → "Linearization Table").
X-VAL. ("Manual" entry mode) Entry	Enter the pressure value for the linearisation table. → See also LIN. EDIT MODE, LINE-NUMB and Y-VAL. **Prerequisite:** ▪ TABLE SELECTION = Editor table
X-VAL. ("Semiautomatic" entry mode) Display	In the "Semiautomatic" entry mode, the container is filled or emptied in stages. The X-VAL. displays the measured hydrostatic pressure. **Prerequisite:** ▪ TABLE SELECTION = Editor table **Operating program** The X-VAL. is saved by confirming the Y-value. **HART Handheld** Confirm X-VAL. displayed. → See also LIN. EDIT MODE, LINE-NUMB and Y-VAL.
Y-VAL. Entry	Enter the volume, mass or %-value belonging to the X-VAL. for the linearisation table. **Prerequisite:** ▪ TABLE SELECTION = Editor table Depending on the setting in the LINd. MEASURAND or COMB. MEASURAND parameters, enter a volume, mass or %-value here. → See also this table, parameter description for LIN. EDIT MODE, LINE-NUMB, X-VAL. ("Manual" entry mode), X-VAL. ("Semiautomatic" entry mode).

Table 19: (GROUP SELECTION →) OPERATING MENU → SETTINGS → LINEARISATION – Digital communication	
Parameter name	**Description**
EDITOR TABLE Options	Select the function for the editor table. **Prerequisite:** ▪ TABLE SELECTION = Editor table **Options:** ▪ Next point: without function ▪ Last input point: without function ▪ Accept input table: save editor table as measuring table. This overwrites the old measuring table. ▪ Abort: save values entered up to this point for the editor table and display next parameter. The editor table is not activated as a measuring table. ▪ Insert point: see example below. ▪ Delete point: the current point is deleted. See example below. **Example:** Add point, in this case between the 4th and 5th point for example – Select point 5 via the LINE NUMB parameter. – Using the TABLE EDITOR parameter, select the option "Insert point". – Point 5 is displayed for the LINE NUMB parameter. New values for the X-VAL and Y-VAL parameters. **Example:** delete point, in this case the 5th point for example – Select point 5 via the LINE NUMB parameter. – Using the TABLE EDITOR parameter, select the option "Delete point". – The 5th point is deleted. All of the following points are pushed up one number i.e. following deletion, the 6th point becomes Point 5. **Factory setting:** Next point
ACTIV LIN. TAB. X Display	An X-value of the linearisation table already saved appears on the display You can select a point of the linearisation table via the LINE-NUMB parameter. **Prerequisite:** ▪ TABLE SELECTION = View meas. table In the operating program, you can view the entire saved table (Menu "Device Operation" → "Device Functions" → "Additional Functions" → "Linearization Table").
ACTIV LIN. TAB. Y Display	A Y-value of the linearisation table already saved appears on the display You can select a point of the linearisation table via the LINE-NUMB parameter. **Prerequisite:** ▪ TABLE SELECTION = View meas. table In the operating program, you can view the entire saved table (Menu "Device Operation" → "Device Functions" → "Additional Functions" → "Linearization Table").
TANK DESCRIPTION Entry	Enter tank description. (max. 32 alphanumeric characters) **Factory setting:** _
TABLE ACTIVATE	Save editor table as measuring table. This overwrites the old measuring table.

Table 20: (GROUP SELECTION →) OPERATING MENU → SETTINGS → TOTALIZER SETUP	
Parameter name	**Description**
Prerequisite: ▪ MEASURING MODE = Flow	

Table 20: (GROUP SELECTION →) OPERATING MENU → SETTINGS → TOTALIZER SETUP	
Parameter name	**Description**
TOTALIZER 1 UNIT (398), (666), (664), (662) Selection	Select unit for totalizer 1. Depending on the setting in the FLOW-MEAS. TYPE parameter (→ Page 98) this parameter offers a list of volume, norm volume, standard volume and mass units. When a new volume or mass unit is selected, totalizer-specific parameters are converted and displayed with the new unit within a unit group. When the flow mode is changed, the totalizer value is not converted. The 3-digit ID number on the on-site display depends on the FLOW-MEAS. TYPE selected: – (398): FLOW-MEAS. TYPE "Volume p. cond." – (662): FLOW-MEAS. TYPE "Mass" – (664): FLOW-MEAS. TYPE "Gas. std. cond." – (666): FLOW-MEAS. TYPE "Gas. norm conditions" **Factory setting:** m^3
TOT. 1 USER UNIT (627) Entry	Enter text (unit) for customer-specific unit for totalizer 1. You can enter a maximum of eight alphanumeric characters here. → See also FACT. U. U. TOTAL. 1. **Prerequisite:** ▪ TOTALIZER 1 UNIT = User unit Only the first five characters are shown on the on-site display. For example, if "crates" is specified as the customer-specific unit, "crate" is displayed. If the unit contains a slash, up to eight characters can be shown on the on-site display. The maximum number of characters in the counter is again limited to five. For example, if "crates/m2" is specified as the customer-specific unit, "crate/m2" is displayed. In the FieldCare, all eight characters are displayed. In the HART handheld terminal, the customer-specific unit is only displayed in the TOT. 1 USER UNIT parameter. The measured value is displayed with the additional text "User Unit". **Factory setting:** – – – – – – – –
FACT. U. U. TOTAL. 1 (329) Entry	Enter conversion factor for a customer-specific unit for totalizer 1. The conversion factor must be entered in relation to an appropriate SI unit, e.g. m^3 for the "Volume p. cond." FLOW-MEAS. TYPE. → See also TOT. 1 USER UNIT. **Prerequisite:** ▪ TOTALIZER 1 UNIT = User unit **Example:** You want the measured value to be displayed in "buckets". – MEASURED VALUE =1 m3 ≙ 100 buckets – Entry TOT. 1 USER UNIT: bucket – Entry FACT. U. U. TOTAL. 1: 100 – Result: MEASURED VALUE = 100 buckets **Factory setting:** 1.0
NEG. FLOW TOT. 1 (400) Selection	Specify way of counting negative flows for totalizer 1. 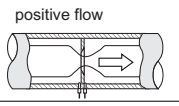 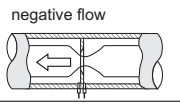 P01-xMD7xxxx-16-xx-xx-xx-003 **Factory setting:** Inc. on neg. flow

Options	positive flow	negative flow
Inc. on. neg. flow	Total increases	Total increases
Dec. on neg. flow	Total increases	Total decreases
Stop on neg. flow	Total increases	Total remains constant

Table 20: (GROUP SELECTION →) OPERATING MENU → SETTINGS → TOTALIZER SETUP	
Parameter name	**Description**
RESET TOTALIZER1 (331) Selection	You reset totalizer 1 to zero with this parameter. **Options:** ▪ Abort (do not reset) ▪ Reset **Factory setting:** Abort
TOTALIZER 2 UNIT (399), (663), (665), (667) Selection	Select unit for totalizer 2. → See also TOTAL 1. ENG. UNIT. The 3-digit ID number on the on-site display depends on the FLOW-MEAS. TYPE selected: – (399): FLOW-MEAS. TYPE "Volume p. cond." – (663): FLOW-MEAS. TYPE "Mass" – (665): FLOW-MEAS. TYPE "Vol. std. cond." – (667): FLOW-MEAS. TYPE "Vol. norm conditions" **Factory setting:** m^3
TOT. 2 USER UNIT (628) Entry	Enter text (unit) for customer-specific unit for totalizer 2. → See also TOT. 1 USER UNIT. **Prerequisite:** ▪ TOTALIZER 2 UNIT = User unit **Factory setting:** – – – – – – – –
FACT. U. U. TOTAL. 2 (330) Selection	Enter conversion factor for a customer-specific unit for totalizer 2. → See also FACT. U. U. TOTAL. 1. **Prerequisite:** ▪ TOTALIZER 2 UNIT = User unit **Factory setting:** 1.0
NEG. FLOW TOT. 2 (416) Selection	Specify way of counting negative flows for totalizer 2. → See NEG. FLOW TOT. 1. **Factory setting:** Positive

Table 21: (GROUP SELECTION →) OPERATING MENU → DISPLAY	
Parameter name	**Description**
MENU DESCRIPTOR (419) Selection	Specify contents for the main line of the on-site display in the measuring mode. → See also Operating Instructions BA00270P (Deltabar S), BA00271P (Cerabar S) or BA00332P (Deltapilot S), Section "On-site display". **Options:** ▪ Main measured value (PV) ▪ Main measured value (%) ▪ Pressure ▪ Flow ▪ Level ▪ Tank content ▪ Current ▪ Temperature ▪ Error number ▪ Totalizer 1 ▪ Totalizer 2 The selection depends on the measuring mode chosen. **Factory setting:** Main measured value (PV)

Table 21: (GROUP SELECTION →) OPERATING MENU → DISPLAY	
Parameter name	**Description**
MAIN DATA FORMAT (688) Selection	Specifies the number of places after the decimal point for the value displayed in the main line. → See also Operating Instructions BA00270P (Deltabar S), BA00271P (Cerabar S) or (BA00332P) Deltapilot S, Section "On-site display". **Options:** ▪ Auto ▪ x.x ▪ x.xx ▪ x.xxx ▪ x.xxxx ▪ x.xxxxx **Factory setting:** Auto
ALTERNATE DATA (423) Selection	Switch on "Alternating display" mode. In this display mode, the on-site display alternates between the following measured values depending on the measuring mode selected. – Pressure: Main measured value (PV), Pressure, Temperature and Current – Level Standard: Main measured value (PV), Pressure, Level, Tank content, Temperature and Current – Level Easy: Main measured value (PV), Pressure, Temperature and Current – Flow: Main measured value (PV), Pressure, Flow, Temperature, Current, Totalizer 1 and Totalizer 2 **Options:** ▪ Off ▪ On **Factory setting:** Off
DISPLAY CONTRAST (339) Entry	Adjust contrast of on-site display. You specify the contrast of the display with a number. Changes are only accepted as single steps, i.e. to change the value from "8" to "4", you need to save four times. You can also adjust the contrast of the display by means of the keys on the electronic insert or at the device. → See also Operating Instructions BA00270P (Deltabar S), BA00271P (Cerabar S) or BA00332P (Deltapilot S), Section "Function of operating keys". **Input range:** 4...13, 4: contrast weaker (brighter), 13: contrast stronger (darker). **Factory setting:** 8
DIGITS SETS (840) Display	This parameter is used to check the correct display of characters and digits on the user interface. If the characters and digits are displayed correctly, this parameter displays the string "0123456789.-".

Table 22: (GROUP SELECTION →) OPERATING MENU → OUTPUT	
Parameter name	**Description**
OUTPUT CURRENT (254) Display	Displays the current current value.

Table 22: (GROUP SELECTION →) OPERATING MENU → OUTPUT	
Parameter name	**Description**
CURR. CHARACT. (694), (695), (696), (764) Selection	Select curve of current output. **Options:** 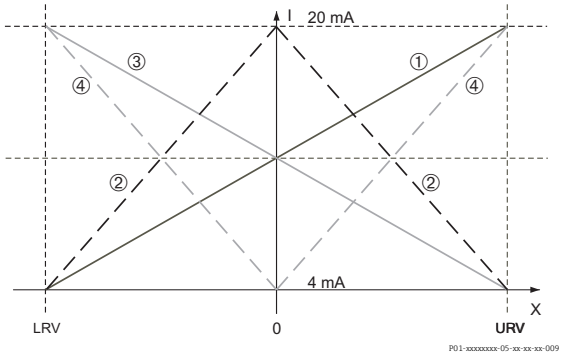 *Fig. 23: Illustration of current output curves* *1 Linear: lower range value = 4 mA, upper range value = 20 mA* *2 Bi-linear: lower range value = 4 mA, centre or zero = 20 mA, upper range value = 4 mA* *3 Linear inverse: lower range value = 20 mA, upper range value = 4 mA* *4 Bi-linear inverse: lower range value = 20 mA, centre or zero = 4 mA, upper range value = 20 mA* *LRV Lower range value* *URV Upper range value* *I Current* *X Measured value (Pressure/Level/Flow)* *The "CURR. CHARACT." function refers to the operating mode previously selected.* The 3-digit ID number on the on-site display depends on the MEASURING MODE selected: – (694): MEASURING MODE "Pressure" or MEASURING MODE "Flow" with the setting for LINEAR/SQROOT "Differential pres. – (695): MEASURING MODE "Flow" with the setting LINEAR/SQROOT "Flow (square root)" – (696): MEASURING MODE "Level", LEVEL MODE "Linear" or "Pressure Linearized" and LEVEL MODE "Height Linearized" with the setting for ASSIGN CURRENT "Level" – (764): MEASURING MODE "Level", LEVEL MODE "Height Linearized" with the setting for ASSIGN CURRENT "Tank content" **Factory setting:** Linear
OUTPUT FAIL MODE (388) Entry	Select the current value in the event of an alarm. In the event of an alarm, the current and the bargraph assume the current value specified with this parameter. **Options:** ▪ Max. alarm (110%): can be set between 21...23 mA ▪ Hold meas. value: last measured value is kept. ▪ Min. alarm (−10%): 3.6 mA → See also this table SET MAX. ALARM and Operating Instructions BA00270P (Deltabar S), BA00271P (Cerabar S) or BA00332P (Deltapilot S), Section "Setting current output for alarm". **Factory setting:** Max. alarm 110% (22 mA)

Table 22: (GROUP SELECTION →) OPERATING MENU → OUTPUT	
Parameter name	**Description**
ALT. CURR. OUTPUT (597) Selection	Set current output if sensor limits undershot or overshot. **Options:** ▪ Normal/NE43: the current output assumes the value set via the OUTPUT FAIL MODE and SET MAX. ALARM parameters. ▪ Special: – Lower sensor limit undershot (E120): Current output = 3.6 mA – Upper sensor limit overshot (E115): current output assumes the value set via the SET MAX. ALARM parameter. Attention : when using the case "special", the behavior is limited to an over/ underpressure in a range LRL -10%, URL +10%. **Factory setting:** Normal/NE43
SET MAX. ALARM (342) Entry	Enter current value for maximum alarm current. → See also OUTPUT FAIL MODE. **Input range:** 21...23 mA **Factory setting:** 22 mA
SET MIN. CURRENT (343) Entry	Enter lower current limit. Some switching units sometimes do not accept currents less than 4.0 mA. **Options:** ▪ 3.8 mA ▪ 4.0 mA **Factory setting:** 3.8 mA
ASSIGN CURRENT (760) Selection	Specify current signal for the "Level" measuring mode. See also SET LRV (→ Page 102) and SET URV (→ Page 102). **Prerequisite:** ▪ MEASURING MODE = Level, LEVEL MODE = Height Linearized **Options:** ▪ Height ▪ Tank content **Factory setting:** Tank content
LINEAR/SQROOT (390) Selection	Specify current signal for the "Flow" measuring mode. See also SET LRV (→ Page 103) and SET URV (→ Page 104). **Prerequisite:** ▪ MEASURING MODE = Flow or Pressure **Options:** ▪ Differential pres.: the linear pressure signal is used for the current output. ▪ Flow (square root): the root flow signal is used for the current output. The "Flow (square root)" current signal is indicated on the on-site display with a root symbol. **Factory setting:** Pressure

Table 23: (GROUP SELECTION →) OPERATING MENU → TRANSMITTER INFO → HART DATA	
Parameter name	**Description**
HART VERSION Display	Displays the HART Version.

Table 23: (GROUP SELECTION →) OPERATING MENU → TRANSMITTER INFO → HART DATA	
Parameter name	**Description**
CURRENT MODE (052) Selection	Set the current mode for HART communication. **Selection via on-site display and FieldCare:** ▪ Signaling Measured value transmission by the current value ▪ Fixed Fixed current 4.0 mA (multidrop mode) (Measured value transmission only via HART digital communication) **Factory setting:** Signaling **Selection via HART Handheld Terminal:** ▪ enabled Measured value transmission by the current value ▪ disabled Fixed current 4.0 mA (multidrop mode) (Measured value transmission only via HART digital communication) **Factory setting:** enabled
BUS ADDRESS (345) Entry	Enter the address for the exchange of data with the HART protocol. (HART 5.0: range 0 to 15, wherein if the address = 0 this produces the "Signaling" setting; HART 6.0/7.0: range 0 to 63) **Factory setting:** 0
DEVICE TYPE (351) Display	Displays the device type in decimal numerical format, here Deltabar S: 23 The extended device type is a composition of the manufacturer number (17) and the device type (23). **Prerequisite:** ▪ Deltabar S differential pressure transmitter
DEVICE TYPE (802) Display	Displays the device type in decimal numerical format, here Cerabar S: 24 The extended device type is a composition of the manufacturer number (17) and the device type (24). **Prerequisite:** ▪ Pressure transmitter Cerabar S
DEVICE TYPE (002) Display	Displays the device type in decimal numerical format, here Deltapilot S: 26 The extended device type is a composition of the manufacturer number (17) and the device type (26). **Prerequisite:** ▪ Pressure transmitter Deltapilot S
DEVICE NAME STR. Display	Displays the device name (16 alphanumeric characters). **Prerequisite:** ▪ Digital communication
DEVICE REVISION (699) Display	Displays the device revision
BURST MODE Selection	Switches "Burst Mode" function on and off. **Selection:** ▪ On ▪ Off **Prerequisite:** ▪ Digital communication
BURST OPTION Entry	Use this parameter to specify which command is sent to the master. **Prerequisite:** ▪ Digital communication **Factory setting:** 3 (HART commando 3)

Table 23: (GROUP SELECTION →) OPERATING MENU → TRANSMITTER INFO → HART DATA	
Parameter name	**Description**
PREAMBLE NUMBER (036) Entry	Enter the number of preambles in the HART protocol. (Synchronisation of the modem modules along a transmission path, each modem module could "swallow" a byte - at least 2 bytes must arrive.) **Input range:** 2...20 **Factory setting:** 5
MANUFACTOR ID (432) Display	Displays the manufacturer number in a decimal numerical format. Here: 17 Endress+Hauser
HART MESSAGE (271) Entry	Enter message (max. 32 alphanumeric characters). On command from the master, this message is sent via the HART protocol. **Factory setting:** _ or as per order specifications
HART DATE (481) Entry	Enter the date of the last configuration change. **Factory setting:** DD.MM.YY (date of final test)
HART PRIMARY VALUE IS Display	This parameter displays the following measured value depending on the measuring mode selected: – Measuring mode "Pressure": PRESSURE – "Level" measuring mode, "Linear" or "Pressure Linearized" level type: LEVEL BEFORE LIN – Measuring mode "Level", level type "Height Linearized": TANK CONTENT – Measuring mode "Flow": SUPPRESSED FLOW → See also PRIMARY VALUE. **Prerequisite:** ▪ Digital communication
PRIMARY VALUE Display	Displays the primary value. → See also HART PRIMARY VALUE IS. **Prerequisite:** ▪ Digital communication
SECONDARY VAL. IS	Select second process value. You can choose between the following process values depending on the measuring mode selected: – PRESSURE – CORRECTED PRESS. – SENSOR PRESSURE – SENSOR TEMP. – PCB TEMPERATURE – SUPPRESSED FLOW – TOTALIZER 1 – TOTALIZER 2 – LEVEL BEFORE LIN – TANK CONTENT **Prerequisite:** ▪ Digital communication
SECONDARY VALUE	Display second process value. → See also SECONDARY VAL. IS. **Prerequisite:** ▪ Digital communication
THIRD VALUE IS	Select third process value. → See also SECONDARY VAL. IS. **Prerequisite:** ▪ Digital communication
THIRD VALUE	Display third process value. → See also SECONDARY VAL. IS. **Prerequisite:** ▪ Digital communication

Table 23: (GROUP SELECTION →) OPERATING MENU → TRANSMITTER INFO → HART DATA	
Parameter name	**Description**
4TH VALUE IS	Select fourth process value. → See also SECONDARY VAL. IS. **Prerequisite:** ▪ Digital communication
4TH VALUE	Display fourth process value. → See also SECONDARY VAL. IS. **Prerequisite:** ▪ Digital communication

Table 24: (GROUP SELECTION →) OPERATING MENU → TRANSMITTER INFO → TRANSMITTER DATA	
Parameter name	**Description**
DEVICE SERIAL No (354) Display	Displays the serial number of the device (11 alphanumeric characters).
ELECTR. SERIAL No (386) Display	Displays the serial number of the main electronics (11 alphanumeric characters).
CUST. TAG NUMBER (055) Entry	Enter TAG number (max. 8 alphanumeric characters). **Factory setting:** _ _ _ _ _ _ _ _ or as per order specifications
LONG TAG NUMBER (305) Entry	Enter TAG number (max. 32 alphanumeric characters). **Factory setting:** _ or as per order specifications
ADDITIONAL INFO. (272) Entry	Enter tag description (max. 16 alphanumeric characters). **Factory setting:** _ _ _ _ _ _ _ _ _ _ _ _ _ _ _ _ _ or as per order specifications
DEVICE DESIGN. (350) Display	Displays the device designation and order code.
HARDWARE REV. (266) Display	Displays the revision number of the main electronics e.g.: V02.00.00
SOFTWARE VERSION (264) Display	Displays the software version e.g.: V02.10.00
CONFIG RECORDER (352) Display	Displays the configuration counter. This counter is increased by one with each change to a parameter or group. The counter counts to 65535 and then starts again at zero. Changes in the parameters of the DISPLAY function group do not increase the counter.
PCB TEMPERATURE (357) Display	Displays the measured temperature of the main electronics.
ALLOWED MIN. TEMP (358) Display	Displays the lower temperature limit of the main electronics.
ALLOWED MAX. TEMP (359) Display	Displays the upper temperature limit of the main electronics.

Table 24: (GROUP SELECTION →) OPERATING MENU → TRANSMITTER INFO → TRANSMITTER DATA	
Parameter name	**Description**
DIP STATUS (363) Display	Displays the status of DIP switch 1 on the electronic insert. You can lock or unlock parameters relevant to the measured value with DIP switch 1. If operation is locked by means of the INSERT PIN No. parameter, you can only unlock operation again by means of this parameter. (→ INSERT PIN NO, see Page 125.) → See also Operating Instructions BA00270P (Deltabar S), BA00271P (Cerabar S) or BA00332P (Deltapilot S), Section "Locking/unlocking operation". **Display:** ▪ On (locking switched on) ▪ Off (locking switched off) **Factory setting:** Off (locking switched off)

Table 25: (GROUP SELECTION →) OPERATING MENU → TRANSMITTER INFO → PROCESS CONNECTION	
Parameter name	**Description**
Pmax PROC. CONN. (570) Entry	For entering and displaying the maximum permitted pressure of the process connection. **Factory setting:** In accordance with nameplate data (→ see also Operating Instructions BA00270P (Deltabar S), BA00271P (Cerabar S) or BA00332P (Deltapilot S), Section nameplate)
PROC. CONN. TYPE (482) Selection	For selecting and displaying the process connection type. **Options:** ▪ Not used ▪ Unknown ▪ Special ▪ Oval flange ▪ Thread female ▪ Thread male ▪ Flange ▪ Remote seal
MAT. PROC. CONN. + (360) Selection	For selecting and displaying the material of the process connection (P+). → See also parameter description for MAT. PROC. CONN. - **Options:** ▪ Not used ▪ Unknown ▪ Special ▪ Steel ▪ 304 st. steel ▪ 316 st. steel ▪ Alloy C ▪ Monel ▪ Tantalum ▪ Titanium ▪ PTFE (Teflon) ▪ 316L st. steel ▪ PVC ▪ Inconel ▪ PVDF ▪ ECTFE **Factory setting:** As per order specifications
MAT. PROC. CONN. - (361) Selection	For selecting and displaying the material of the process connection (P−). → See also parameter description for MAT. PROC. CONN. + **Prerequisite:** ▪ Deltabar S differential pressure transmitter

Table 25: (GROUP SELECTION →) OPERATING MENU → TRANSMITTER INFO → PROCESS CONNECTION	
Parameter name	**Description**
SEAL TYPE (362) Selection	For selecting and displaying the material of the process seal. **Options:** ▪ Not used ▪ Unknown ▪ Special ▪ FKM Viton ▪ NBR ▪ EPDM ▪ Urethane ▪ IIR ▪ Kalrez ▪ FKM Viton oxyg ▪ CR ▪ MVQ ▪ PTFE glass ▪ PTFE graphite ▪ PTFE oxygen ▪ Copper ▪ Copper f. oxygen **Factory setting:** As per order specifications
BOLTS MATERIAL	For selecting and displaying the material of the bolts. **Prerequisite:** ▪ Digital communication
NUTS MATERIAL	For selecting and displaying the material of the nuts. **Prerequisite:** ▪ Digital communication
DRAIN VENT MAT.	For selecting and displaying the material of the vent valves. **Prerequisite:** ▪ Digital communication
DRAIN VENT POS.	For selecting and displaying the position of the vent valves. **Prerequisite:** ▪ Digital communication
THREAD	For selecting and displaying the process connection thread. **Prerequisite:** ▪ Digital communication
MOUNTING THREAD	For selecting and displaying the ways of securing the device. **Prerequisite:** ▪ Digital communication
REMOTE SEAL +	For selecting and displaying the diaphragm seal type on the positive side. **Prerequisite:** ▪ Digital communication
REMOTE SEAL −	For selecting and displaying the diaphragm seal type on the negative side. **Prerequisite:** ▪ Digital communication
DIAPHRAG. MAT. +	For selecting and displaying the material of the process isolating diaphragm on the positive side. **Prerequisite:** ▪ Digital communication
DIAPHRAG. MAT. −	For selecting and displaying the material of the process isolating diaphragm on the negative side. **Prerequisite:** ▪ Digital communication

Table 25: (GROUP SELECTION →) OPERATING MENU → TRANSMITTER INFO → PROCESS CONNECTION	
Parameter name	**Description**
NR OF REMOTE SEAL	For selecting and displaying the number of diaphragm seals. **Prerequisite:** ▪ Digital communication
FILL FLUID	For selecting and displaying the diaphragm seal fill fluid. **Prerequisite:** ▪ Digital communication

Table 26: (GROUP SELECTION →) OPERATING MENU → TRANSMITTER INFO → SENSOR DATA (all measuring modes)	
Parameter name	**Description**
SENSOR SER. No. (250) Display	Displays the serial number of the sensor (11 alphanumeric characters).
PRESS. SENS LOLIM (484) Display	Displays the lower measuring limit of the sensor.
PRESS. SENS HILIM (485) Display	Displays the upper measuring limit of the sensor.
MINIMUM SPAN (591) Display	Displays the smallest possible span.
SENSOR MEAS.TYPE (581) Display	Displays the sensor type. ▪ Deltabar S = differential ▪ Cerabar S with gauge pressure sensor = relative ▪ Cerabar S with absolute pressure sensor = absolute ▪ Deltapilot S = relative
Pmin SENS. DAMAGE (251) Display	Displays the minimum permissible absolute pressure of the sensor (vacuum-proofing).
Pmax SENS. DAMAGE (252) Display	Displays the maximum permissible absolute pressure of the sensor (overpressure-proofing).
MAT. MEMBRANE (365) Display	Displays the material of the process isolating diaphragm. **Factory setting:** As per version in the order code → For Deltabar S, see Technical Information TI00382P, for Cerabar S, see Technical Information TI00383P or for Deltapilot S, see Technical Information TI00416P, "Ordering information" section.
FILLING FLUID (366) Display	Displays the filling fluid.
Tmin SENSOR (368) Display	Displays the lower nominal temperature limit of the sensor.
Tmax SENSOR (369) Display	Displays the upper nominal temperature limit of the sensor.
SENS H/WARE REV (487) Display	Displays the revision number of the sensor hardware. e.g.: 1

Table 27: (GROUP SELECTION →) OPERATING MENU → PROCESSINFO → PROCESS VALUES "Pressure"	
Parameter name	**Description**
Prerequisite: ▪ MEASURING MODE = pressure	

Table 27: (GROUP SELECTION →) OPERATING MENU → PROCESSINFO → PROCESS VALUES "Pressure"	
Parameter name	**Description**
MEASURED VALUE (679)	Displays the measured value In the "Pressure" measuring mode, this value corresponds to the PRESSURE parameter. **Prerequisite:** ▪ Digital communication **On-site operation:** ▪ For on-site operation, the MEASURED VALUE parameter is displayed on the 1st level.
PRESSURE (301) Display	Displays the measured pressure after sensor recalibration, position adjustment and damping. This value corresponds to the MEASURED VALUE parameter in the "Pressure" measuring mode. 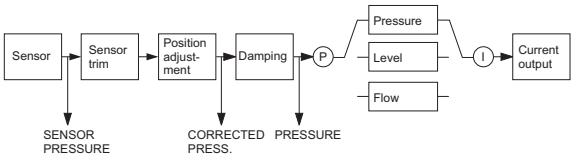 P01-xMx7xxxx-05-xx-xx-xx-009
CORRECTED PRESS. (434) Display	Displays the measured pressure after sensor trim and position adjustment and before damping. → See also PRESSURE diagram.
SENSOR PRESSURE (584) Display	Displays the measured pressure before sensor trim, position adjustment and damping. → See also PRESSURE diagram.
SENSOR TEMP. (367) Display	Displays the temperature currently measured in the sensor. This temperature can deviate from the process temperature.
MEAS. VAL. TREND (378) Display	Displays the trend of the pressure measured value. Possibilities: increasing, decreasing, constant

Table 28: (GROUP SELECTION →) OPERATING MENU → PROCESSINFO → PROCESS VALUES "Level"	
Parameter name	**Description**
Prerequisite: ▪ MEASURING MODE = Level	
MEASURED VALUE (679)	Displays the measured value In the "Level" measuring mode with "Linear" level type, this value corresponds to the LEVEL BEFORE LIN parameter In the "Level" measuring mode with "Height Linearized" or "Pressure Linearized" level type, this value corresponds to the TANK CONTENT parameter. **Prerequisite:** ▪ Digital communication **On-site operation:** ▪ For on-site operation, the MEASURED VALUE parameter is displayed on the 1st level.

Table 28: (GROUP SELECTION →) OPERATING MENU → PROCESSINFO → PROCESS VALUES "Level"	
Parameter name	**Description**
PRESSURE (301) Display	Displays the measured pressure after sensor recalibration, position adjustment and damping. This value corresponds to the MEASURED VALUE parameter in the "Pressure" measuring mode. 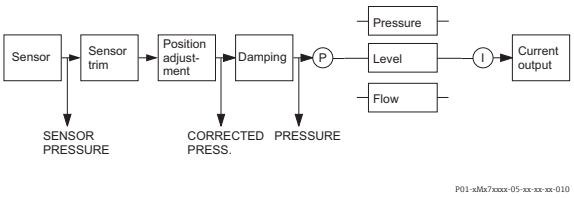
CORRECTED PRESS. (434) Display	Displays the measured pressure after sensor trim and position adjustment and before damping. → See also PRESSURE diagram.
SENSOR PRESSURE (584) Display	Displays the measured pressure before sensor trim, position adjustment and damping. → See also PRESSURE diagram.
SENSOR TEMP. (367) Display	Displays the temperature currently measured in the sensor. This temperature can deviate from the process temperature.
MEAS. VAL. TREND (378) Display	Displays the trend of the pressure measured value. Possibilities: increasing, decreasing, constant
LEVEL BEFORE LIN (050) Display	Displays the level value prior to linearisation. **Prerequisite:** ▪ LEVEL MODE = Linear or Height Linearized Depending on the setting for the LIN. MEASURAND or COMB. MEASURAND parameter, this parameter displays the current level in % or in a unit of level.
TANK CONTENT (370) Display	Displays the level value after linearisation. **Prerequisite:** ▪ LEVEL MODE = Pressure Linearized or Height Linearized Depending on the settings for the LINd. MEASURAND or COMB. MEASURAND parameter, the current tank content is displayed in % or in a unit of volume or mass. This value corresponds to the MEASURED VALUE.

Table 29: (GROUP SELECTION →) OPERATING MENU → PROCESSINFO → PROCESS VALUES "Flow"	
Parameter name	**Description**
Prerequisite: ▪ MEASURING MODE = Flow	
MEASURED VALUE (679)	Displays the measured value In the "Flow" measuring mode, this value corresponds to the SUPPRESSED FLOW parameter. **Prerequisite:** ▪ Digital communication **On-site operation:** ▪ For on-site operation, the MEASURED VALUE parameter is displayed on the 1st level.

Table 29: (GROUP SELECTION →) OPERATING MENU → PROCESSINFO → PROCESS VALUES "Flow"	
Parameter name	**Description**
PRESSURE (301) Display	Displays the measured pressure after sensor recalibration, position adjustment and damping. This value corresponds to the MEASURED VALUE parameter in the "Pressure" measuring mode. 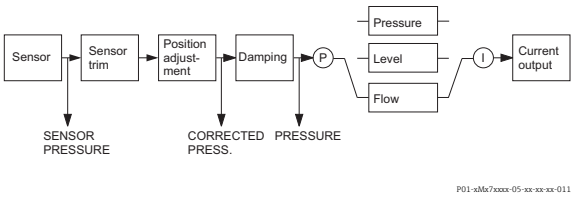
CORRECTED PRESS. (434) Display	Displays the measured pressure after sensor trim and position adjustment and before damping. → See also PRESSURE diagram.
SENSOR PRESSURE (584) Display	Displays the measured pressure before sensor trim, position adjustment and damping. → See also PRESSURE diagram.
SENSOR TEMP. (367) Display	Displays the temperature currently measured in the sensor. This temperature can deviate from the process temperature.
MEAS. VAL. TREND (378) Display	Displays the trend of the pressure measured value. Possibilities: increasing, decreasing, constant
SUPPRESSED FLOW (375) Display	Displays the current flow. Depending on the flow mode selected (→ FLOW-MEAS. TYPE), a volume flow, mass flow, standard volume flow or corrected volume flow is displayed.
TOTALIZER 1 (652) Display	Displays the total flow value of totalizer 1. You can reset the value with the RESET TOTALIZER 1 parameter. The TOTAL. 1 OVERFLOW parameter displays the overflow. **Example:** The value 123456789 m^3 is displayed as follows: – TOTALIZER 1: 3456789 m^3 – TOTAL. 1 OVERFLOW: 12 E7
TOTAL. 1 OVERFLOW (655) Display	Displays the overflow value of totalizer 1. → See also TOTALIZER 1.
TOTALIZER 2 (657) Display	Displays the total flow value of totalizer 2. You cannot reset totalizer 2. The TOTAL. 2 OVERFLOW parameter displays the overflow. → See also example for TOTALIZER 1.
TOTAL. 2 OVERFLOW (658) Display	Displays the overflow value of totalizer 2. → See also TOTALIZER 2 and example for TOTALIZER 1.

Table 30: (GROUP SELECTION →) OPERATING MENU → PROCESSINFO → PEAK HOLD INDICATOR	
Parameter name	**Description**
COUNTER:P > Pmax (380) Display	Displays the overpressure counter of the sensor The limit value is: upper nominal pressure limit of sensor + 10 % of upper nominal pressure limit of sensor. You can reset this counter by means of the RESET PEAKHOLD parameter.
MAX. MEAS. PRESS. (383) Display	Displays the largest measured pressure value (peak hold indicator). You can reset this indicator by means of the RESET PEAKHOLD parameter.
COUNTER P < Pmin (467) Display	Displays the vacuum pressure counter of the sensor The limit value is: lower nominal pressure limit of sensor – 10 % of upper nominal pressure limit of sensor. You can reset this counter by means of the RESET PEAKHOLD parameter.
MIN. MEAS. PRESS. (469) Display	Displays the smallest measured pressure value (peak hold indicator). You can reset this indicator by means of the RESET PEAKHOLD parameter.

Table 30: (GROUP SELECTION →) OPERATING MENU → PROCESSINFO → PEAK HOLD INDICATOR	
Parameter name	**Description**
COUNTER:T > Tmax (404) Display	Displays the number of times the specified temperature range of the sensor has been overshot. You can reset this counter by means of the RESET PEAKHOLD parameter.
MAX. MEAS. TEMP. (471) Display	Displays the largest measured temperature in the sensor (peak hold indicator). You can reset this indicator by means of the RESET PEAKHOLD parameter.
COUNTER:T < Tmin (472) Display	Displays the number of times the specified temperature range of the sensor has been undershot. You can reset this counter by means of the RESET PEAKHOLD parameter.
MIN. MEAS. TEMP. (474) Display	Displays the smallest measured temperature in the sensor (peak hold indicator). You can reset this indicator by means of the RESET PEAKHOLD parameter.
PCB COUNT:T > Tmax (488) Display	Displays the number of times the specified temperature range of the electronics has been overshot.
PCB MAX. TEMP. (490) Display	Displays the largest electronics temperature measured.
PCB COUNT:T < Tmin (492) Display	Displays the number of times the specified temperature range of the electronics has been undershot.
PCB MIN. TEMP. (494) Display	Displays the smallest electronics temperature measured.
RESET PEAKHOLD (382) Selection	This parameter lists all the peak hold indicator parameters that can be reset. You can select the peak hold indicators you want to reset. **Options:** ▪ None ▪ Max. pressure ▪ Min. pressure ▪ Pmax history ▪ Pmin history ▪ Max. temp. ▪ Min. temp. ▪ Tmax history ▪ Tmin history ▪ Reset all **Factory setting:** None

Table 31: (GROUP SELECTION →) OPERATING MENU → OPERATING	
Parameter name	**Description**
ENTER RESET CODE (047) Entry	Reset parameters completely or partially to factory values or delivery status. → See also Operating Instructions BA00270P (Deltabar S), BA00271P (Cerabar S) or BA00332P (Deltapilot S), Section "Factory setting" (reset). **Factory setting:** 0
OPERATING HOURS (409) Display	Displays the hours of operation. This parameter cannot be reset.

Table 31: (GROUP SELECTION →) OPERATING MENU → OPERATING	
Parameter name	**Description**
INSERT PIN NO (048) Entry	For entering a code to lock or unlock operation. ▪ The -symbol on the on-site display indicates that operation is locked. Parameters which refer to how the display appears, e.g. LANGUAGE and DISPLAY CONTRAST can still be altered. ▪ If operation is locked by means of the DIP-switch, you can only unlock operation again by means of the DIP-switch. If operation is locked by means of the on-site display or remote operation e.g. FieldCare, you can unlock operation again by means of the on-site display or using remote operation. → See also Operating Instructions BA00270P (Deltabar S), BA00271P (Cerabar S) or BA00332P (Deltapilot S), Section "Locking/unlocking operation". **Options:** ▪ Lock: enter a number between 0...9999 which is ≠100. ▪ Unlock: enter the number 100. **Factory setting:** 100
HistoROM AVAIL. (831) Display	Indicates whether the optional HistoROM®/M-DAT memory module is connected to the electronic insert. → See also Operating Instructions BA00270P (Deltabar S), BA00271P (Cerabar S) or BA00332P (Deltapilot S), Section "HistoROM®/M-DAT (optional)". **Options:** ▪ Yes (HistoROM®/M-DAT is attached to the electronic insert) ▪ No (HistoROM®/M-DAT is not attached to the electronic insert)
DOWNLOAD SELECT (014) Options	Select download function from HistoROM to device. The selection has no effect on an upload from the device to the HistoROM. **Prerequisite:** ▪ A HistoROM®/M-DAT is attached to the electronic insert (HistoROM AVAIL. = yes) **Options:** ▪ Configuration copy: For this option, all parameters apart from the DEVICE SERIAL No, DEVICE DESIGN., CUST. TAG NUMBER, LONG TAG NUMBER, ADDITIONAL INFO., BUS ADDRESS, CURRENT MODE and the parameters of the POSITION ADJUSTMENT and PROCESS CONNECTION group are overwritten. ▪ Device replacement: With this option, all parameters except for DEVICE SERIAL No, DEVICE DESIGN. and the parameters of the POSITION ADJUSTMENT and PROCESS CONNECTION group are overwritten. ▪ Electronics replace: With this option, all parameters except for the parameters of the POSITION ADJUSTMENT group are overwritten. **Factory setting:** Copy config. (if HistoROM®/M-DAT is attached to the electronic insert)
HistoROM CONTROL (832) Selection	For selecting the direction for copying the data. → See also Operating Instructions BA00270P (Deltabar S), BA00271P (Cerabar S) or BA00332P (Deltapilot S), Section "HistoROM®/M-DAT (optional)". **Prerequisite:** ▪ A HistoROM®/M-DAT is attached to the electronic insert (HistoROM AVAIL. = yes) **Options:** ▪ Abort ▪ HistoROM → Device ▪ Device → HistoROM **Factory setting:** Abort (if HistoROM®/M-DAT is connected to the electronic insert)

Table 32: (GROUP SELECTION →) OPERATING MENU → DIAGNOSTICS → SIMULATION	
Parameter name	**Description**
SIMULATION MODE (413) Selection	Switch on simulation and select simulation type. Any simulation running is switched off if the measuring mode or level type is changed. **Options**: ▪ None ▪ Pressure, → see also this table parameter description for SIM. PRESSURE ▪ Flow (only differential pressure transmitter), → see also this table parameter description for SIM. FLOW VALUE ▪ Level, → see also this table parameter description for SIM. LEVEL ▪ Tank content, → see also this table parameter description for SIM. TANK CONT. ▪ Current, → see also this table parameter description for SIM. CURRENT Note: "Square root" has to be selected in the LINEAR/SQROOT parameter to ensure the current output corresponds to the simulated flow value. ▪ Alarm/warning, , → see also this table parameter description for SIM. ERROR NO. 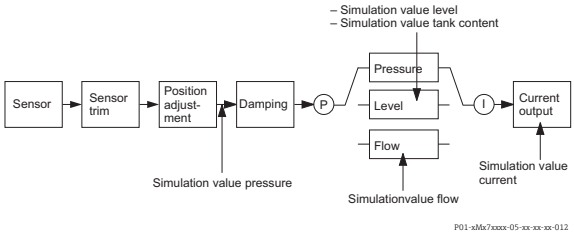 **Factory setting:** None
SIM. PRESSURE (414) Entry	Enter simulation value. → See also SIMULATION MODE. **Prerequisite:** ▪ SIMULATION MODE = Pressure **Factory setting:** Current pressure measured value
SIM. FLOW VALUE (639) Entry	Enter simulation value. → See also SIMULATION MODE. **Prerequisite:** ▪ MEASURING MODE = Flow and SIMULATION MODE = Flow
SIM. LEVEL (714) Entry	Enter simulation value. → See also SIMULATION MODE. **Prerequisite:** ▪ MEASURING MODE = Level and SIMULATION MODE = Level
SIM. TANK CONT. (715) Entry	Enter simulation value. → See also SIMULATION MODE. **Prerequisites:** ▪ MEASURING MODE = Level, LEVEL MODE = Pressure Linearized and SIMULATION MODE = Tank content ▪ MEASURING MODE = Level, LEVEL MODE = Height Linearized and SIMULATION MODE = Tank content
SIM. CURRENT (270) Entry	Enter simulation value. → See also SIMULATION MODE. **Prerequisite:** ▪ SIMULATION MODE = Current value **Factory setting:** Current current value

Table 32: (GROUP SELECTION →) OPERATING MENU → DIAGNOSTICS → SIMULATION	
Parameter name	**Description**
SIM. ERROR NO. (476) Entry	**⚠ CAUTION** **Note Dependencies when setting parameters!** ▶ The SIMULATION parameter overwrites fault states (alarm/warning) that are actually present. When the simulation is ended, the fault states (alarm/warning) still persist but are no longer displayed! When the device is restarted it returns to its fault state. Enter message number. → See also SIMULATION MODE. → See also these Operating Instructions, Section 10.1 "Messages", "Code" table column. **Prerequisite:** ▪ SIMULATION MODE = Alarm/Warning **Factory setting:** 613 (simulation active)

Table 33: (GROUP SELECTION →) OPERATING MENU → DIAGNOSTICS → MESSAGES	
Parameter name	**Description**
ALARM STATUS (046) Display	Displays the current messages present. → See also these Operating Instructions, Section 10.1. "Messages" and Section 10.3 "Confirming messages". **On-site display** ▪ The measured value display shows the message with the highest priority. ▪ The ALARM STATUS parameter shows all the messages in descending order of priority. You can scroll through all the messages present with the ⊞ or ⊟ key. **Operating program** ▪ The "Status" field and the ALARM STATUS parameter show the message with the highest priority.
LAST DIAG. CODE (564) Display	Displays the last messages that occurred and were eliminated. ▪ On-site display: you can scroll through the last 15 messages with the ⊞ or ⊟ key. ▪ Digital communication: the last message appears on the display. ▪ Use the RESET ALL ALARMS parameter to delete the messages listed in the LAST DIAG. CODE parameter.
ACK. ALARM MODE (401) Selection	Switch on acknowledge alarm mode. → See also ACK. ALARM. **Options:** ▪ On ▪ Off **Factory setting:** Off
ACK. ALARM (500) Selection	Acknowledge alarm. **Prerequisite:** ▪ ACK. ALARM MODE = on **Options:** ▪ Abort ▪ Confirm The cause of the alarm must be eliminated, the message must be acknowledged via the ACK. ALARM parameter and, where applicable, the ALARM DISPL. TIME (→ Page 128) has to have elapsed before the device starts measuring again following an alarm. → See also these Operating Instructions, Section 10.3 "Confirming messages". **Factory setting:** Abort

Table 33: (GROUP SELECTION →) OPERATING MENU → DIAGNOSTICS → MESSAGES	
Parameter name	**Description**
RESET ALL ALARMS (603) Selection	Use this parameter to reset all the messages of the LAST DIAG. CODE parameter. **Options:** ▪ Abort ▪ Confirm **Factory setting:** Abort
ERROR No. Entry	For "Error"-type messages, you can decide whether the device should behave as in the event of an alarm (A) or as in the event of a warning (W). Enter the corresponding message number for this parameter. → See also SELECT ALARMTYPE. → See also these Operating Instructions, Section 10.1 "Messages" and Section 10.2 "Response of outputs to errors". **Prerequisite:** ▪ Digital communication
SELECT ALARMTYPE (595) – Entry (600) – Selection	For "Error"-type messages, you can decide whether the device should behave as in the event of an alarm (A) or as in the event of a warning (W). → See also ERROR No. → See also these Operating Instructions, Section 10.2 "Response of outputs to errors". **Options**: ▪ Alarm (A): output current assumes a defined value. ▪ Warning (W): device continues measuring **On-site operation:** 1. Enter the corresponding message number for ERROR No. field. 2. Select "Alarm" or "Warning" option. **Digital communication:** 1. Enter the corresponding message number via the ERROR No. parameter. 2. Use the SELECT ALARMTYPE parameter to select the "Alarm" or "Warning" option.
ALARM DELAY (336) Entry	Enter alarm response time for all "Error" messages. There is no alarm if the cause of the error is eliminated within the alarm delay time. **Input range:** 0...100 s **Factory setting:** 0.0 s
ALARM DISPL. TIME (480) Entry	Enter alarm display time for all "Error" messages. Once the cause of the error is rectified, the alarm display time starts running. The following applies if the setting for ACK. ALARM MODE = on: If an alarm appears and the alarm display time elapses before the alarm has been acknowledged, the message will be cleared once it has been acknowledged. → See also these Operating Instructions, Section 10.3 "Confirming messages". **Input range:** 0...999.9 s **Factory setting:** 0.0 s

Table 34: (GROUP SELECTION →) OPERATING MENU → DIAGNOSTICS → USER LIMITS	
Parameter name	**Description**
Pmin ALARM WINDOW (332) Entry	Customer-specific process monitoring – enter lower pressure limit. You can use the SELECT ALARMTYPE parameter to enter how the device responds if the operating pressure undershoots the specified value. → See also these Operating Instructions, Section 10.1 "Messages", table, Code E730 and Section 10.2 "Response of outputs to errors". **Factory setting:** Low sensor limit ▪ 1.1 (→ For the low sensor limit, see PRESS. SENS LOLIM.)
Pmax ALARM WINDOW (333) Entry	Customer-specific process monitoring – enter upper pressure limit. You can use the SELECT ALARMTYPE parameter to enter how the device responds if the operating pressure exceeds the specified value. → See also these Operating Instructions, Section 10.1 "Messages", table, Code E731 and Section 10.2 "Response of outputs to errors". **Factory setting:** High sensor limit ▪ 1.1 (→ For the high sensor limit, see PRESS. SENS HILIM.)
Tmin ALARM WINDOW (334) Entry	Customer-specific process monitoring – enter lower temperature limit. You can use the SELECT ALARMTYPE parameter to enter how the device responds if the sensor temperature undershoots the specified value. → See also these Operating Instructions, Section 10.1 "Messages", table, Code E732 and Section 10.2 "Response of outputs to errors". **Factory setting:** Lower sensor temperature application limit – 10 K (→ For the lower temperature application limit, see Tmin SENSOR)
Tmax ALARM WINDOW (335) Entry	Customer-specific process monitoring – enter upper temperature limit. You can use the SELECT ALARMTYPE parameter to enter how the device responds if the sensor temperature exceeds the specified value. → See also these Operating Instructions, Section 10.1 "Messages", table, Code E733 and Section 10.2 "Response of outputs to errors". **Factory setting:** Upper sensor temperature application limit +10 K (→ For the upper temperature application limit, see Tmax SENSOR)

Table 35: (GROUP SELECTION →) OPERATING MENU → SERVICE → SYSTEM 2	
Parametername	**Beschreibung**
CURR. TRIM 4mA (045) Entry	Enter current value for the lower point (4 mA) of the current output trim line. You can adapt the current output to the transmission conditions with this parameter and CURR. TRIM 20mA. Perform current trim for the lower point as follows: 1. Select SIMULATION group. (Menu path: (GROUP SELECTION) → OPERATING MENU → DIAGNOSTICS → SIMULATION) 2. Select option "Current" via SIMULATION parameter. 3. Enter "4 mA" for SIM. CURRENT parameter. 4. Select SYSTEM 2 group. (Menu path: (GROUP SELECTION) → OPERATING MENU → SERVICE) 5. Enter the current value measured with the switching unit for the CURR. TRIM 4mA parameter. **Input range:** Measured current (3.8 mA to 4.2 mA) **Factory setting:** 4 mA

Table 35: (GROUP SELECTION →) OPERATING MENU → SERVICE → SYSTEM 2	
Parametername	**Beschreibung**
CURR. TRIM 20mA (042) Entry	Enter current value for the upper point (20 mA) of the current output trim line. You can adapt the current output to the transmission conditions with this parameter and CURR. TRIM 4mA. Perform current trim for the upper point as follows: 1. Select SIMULATION group. (Menu path: (GROUP SELECTION) → OPERATING MENU → DIAGNOSTICS → SIMULATION) 2. Select option "Current" via SIMULATION parameter. 3. Enter "20 mA" for SIM. CURRENT parameter. 4. Select SYSTEM 2 group. (Menu path: (GROUP SELECTION) → OPERATING MENU → SERVICE) 5. Enter the current value measured with the switching unit for the CURR. TRIM 20mA parameter. **Input range:** Measured current (19 mA to 21 mA) **Factory setting:** 20 mA
OFFSET 4mA TRIM (043) Display	Displays the difference between 4 mA and the value entered for the CURRENT TRIM 4mA parameter. **Factory setting:** 0
OFFSET 20mA TRIM (044) Display	Displays the difference between 20 mA and the value entered for the CURRENT TRIM 20mA parameter. **Factory setting:** 0

10 Troubleshooting

10.1 Messages

The following table lists all the possible messages that can occur.
The device differentiates between the error types "Alarm", "Warning" and "Error". You may specify whether the instrument should react as if for an "Alarm" or "Warning" for "Error" messages.
→ See "Error type/NA 64" column and parameter descriptions for ERROR No. and SELECT ALARMTYPE (→ Page 128).

In addition, the "Error type/NA 64" column classifies the messages in accordance with NAMUR Recommendation NA 64:
- Break down: indicated with "B"
- Maintenance need: indicated with "C" (check request)
- Function check: indicated with "T" (in service)

Error message display on the on-site display:
- The measured value display shows the message with the highest priority. → See "Priority" column.
- The ALARM STATUS (→ Page 127) parameter shows all the messages present in descending order of priority. You can scroll through all the messages present with the ⊞ key or ⊟ key.

Message display via the digital communication:
- The ALARM STATUS (→ Page 127) parameter shows the message with the highest priority. → See "Priority" column.
- If the device detects a defect in the on-site display during initialization, special error messages are generated. → For the error messages, see Page 140, Section 10.1.1 "On-site display error messages".
- For support and further information, please contact Endress+Hauser Service.

Code	Error type/ NA 64	Corresponds NE 107	Message/description	Cause	Measure	Priority
101 (A101)	Alarm B	Failure (F)	B>Sensor electronic EEPROM error	– Electromagnetic effects are greater than specifications in the technical data. → See Technical Information TI00382P (Deltabar S), TI00383P (Cerabar S) or TI00416P (Deltapilot S). This message normally only appears briefly. – Sensor defect.	– Wait a few minutes. – Restart the device. Perform reset (Code 62). – Block off electromagnetic effects or eliminate source of disturbance. – Replace sensor.	17
102 (W102)	Warning C	Maintenance request (M)	C>Checksum error in EEPROM: peakhold segment	– Main electronics defect. Correct measurement can continue as long as you do not need the peak hold indicator function.	– Replace main electronics.	53
106 (W106)	Warning C	Funktion check (C)	C>Downloading - please wait	– Downloading.	– Wait for download to complete.	52

Code	Error type/ NA 64	Corresponds NE 107	Message/description	Cause	Measure	Priority
110 (A110)	Alarm B	Failure (F)	B>Checksum error in EEPROM: configuration segment	– The supply voltage is disconnected when writing. – Electromagnetic effects are greater than specifications in the technical data. → See Technical Information TI00382P (Deltabar S), TI00383P (Cerabar S) or TI00416P (Deltapilot S). – Main electronics defect.	– Reestablish supply voltage. Perform reset (Code 7864) if necessary. Carry out calibration again. – Block off electromagnetic effects or eliminate sources of disturbance. – Replace main electronics.	6
113 (A113)	Alarm B	Failure (F)	B>ROM failure in transmitter electronic	– Main electronics defect.	– Replace main electronics.	1
115 (E115)	Error B factory setting: Warning C	Out of specification (S)	B>Sensor overpressure	– Overpressure present. – Sensor defect.	– Reduce pressure until message disappears. – Replace sensor.	29
116 (W116)	Warning C	Maintenance request (M)	C>Download error, repeat download	– The file is defect. – During the download, the data are not correctly transmitted to the processor, e.g. because of open cable connections, spikes (ripple) on the supply voltage or electromagnetic effects.	– Use another file. – Check cable connection PC – transmitter. – Block off electromagnetic effects or eliminate sources of disturbance. – Perform reset (Code 7864) and carry out calibration again. – Repeat download.	36
120 (E120)	Error B factory setting: Warning C	Out of specification (S)	B>Sensor low pressure	– Pressure too low. – Sensor defect.	– Increase pressure until message disappears. – Replace sensor.	30
121 (A121)	Alarm B	Failure (F)	B>Checksum error in factory segment of EEPROM	– Main electronics defect.	– Replace main electronics.	5
122 (A122)	Alarm B	Failure (F)	B>Sensor not connected	– Cable connection sensor –main electronics disconnected. – Electromagnetic effects are greater than specifications in the technical data. → See Technical Information TI00382P (Deltabar S), TI00383P (Cerabar S) or TI00416P (Deltapilot S). – Main electronics defect. – Sensor defect.	– Check cable connection and repair if necessary. – Block off electromagnetic effects or eliminate source of disturbance. – Replace main electronics. – Replace sensor.	13
130 (A130)	Alarm B	Failure (F)	B>EEPROM is defect.	– Main electronics defect.	– Replace main electronics.	10
131 (A131)	Alarm B	Failure (F)	B>Checksum error in EEPROM: min/max segment	– Main electronics defect.	– Replace main electronics.	9
132 (A132)	Alarm B	Failure (F)	B>Checksum error in totalizer EEPROM	– Main electronics defect.	– Replace main electronics.	7

Code	Error type/ NA 64	Corresponds NE 107	Message/description	Cause	Measure	Priority
133 (A133)	Alarm B	Failure (F)	B>Checksum error in History EEPROM	– An error occurred when writing. – Main electronics defect.	– Perform reset (Code 7864) and carry out calibration again. – Replace electronics.	8
602 (W602)	Warning C	Funktion check (C)	C>Linearisation curve not monotone	– The linearisation table is not monotonic increasing or decreasing.	– Add to linearisation table or perform linearisation again.	57
604 (W604)	Warning C	Funktion check (C)	C>Linearisation table not valid. Less than 2 points or points too close	From software version "02.10.xx" onwards, there is no min. span for the Y-points.		
				– The linearisation table consists of less than 2 points. – At least 2 points in the linearisation table are too close together. A minimum gap of 0.5 % of the distance between two points must be maintained. Spans for the "Pressure linearized" option: HYDR. PRESS MAX. – HYDR. PRESS MIN.; TANK CONTENT MAX. – TANK CONTENT MIN. Spans for the "Height linearized" option: LEVEL MAX – LEVEL MIN; TANK CONTENT MAX. – TANK CONTENT MIN.	– Add to linearisation table. If necessary, perform linearisation again. – Correct linearisation table and accept again.	58
613 (W613)	Warning I	Funktion check (C)	I>Simulation is active	– Simulation is switched on, i.e. the device is not measuring at present.	– Switch off simulation.	60
620 (E620)	Error C Factory setting: Warning C	Out of specification (S)	C>Current output out of range	The current is outside the permitted range 3.8 to 20.5 mA. – The pressure applied is outside the set measuring range (but within the sensor range). – Loose connection at sensor cable	– Check pressure applied, reconfigure measuring range if necessary (→ See also these Operating Instructions, chapter 4 to 6.) – Perform reset (Code 7864) and carry out calibration again. – Wait a short period of time and tighten the connection, or avoid loose connection.	49
700 (W700)	Warning C	Maintenance request (M)	C>Last configuration not stored	– An error occurred when writing or reading configuration data or the power supply was disconnected. – Main electronics defect.	– Perform reset (Code 7864) and carry out calibration again. – Replace main electronics.	54
701 (W701)	Warning C	Funktion check (C)	C>Measuring chain config. exceeds sensor range	– The calibration carried out would result in the sensor nominal operating range being undershot or overshot.	– Carry out calibration again.	50

Code	Error type/ NA 64	Corresponds NE 107	Message/description	Cause	Measure	Priority
702 (W702)	Warning C	Maintenance request (M)	C>HistoROM data not consistent.	– Data were not written correctly to the HistoROM, e.g. if the HistoROM was detached during the writing process. – HistoROM does not have any data.	– Repeat upload. – Perform reset (Code 7864) and carry out calibration again. – Copy suitable data to the HistoROM. (→ See also Operating Instructions BA00270P (Deltabar S), BA00271P (Cerabar S) or BA00332P (Deltapilot S), Section "Copying configuration data".)	55
703 (A703)	Alarm B	Failure (F)	B>Measurement error	– Fault in the main electronics. – Main electronics defect.	– Briefly disconnect device from the power supply. – Replace main electronics.	22
704 (A704)	Alarm B	Funktion check (C)	B>Measurement error	– Fault in the main electronics. – Main electronics defect.	– Briefly disconnect device from the power supply. – Replace main electronics.	12
705 (A705)	Alarm B	Failure (F)	B>Measurement error	– Fault in the main electronics. – Main electronics defect.	– Briefly disconnect device from the power supply. – Replace main electronics.	21
706 (W706)	Warning C	Maintenance request (M)	C>Configuration in HistoROM and device not identical	– Configuration (parameters) in the HistoROM and in the device is not identical.	– Copy data from the device to the HistoROM. – Copy data from the HistoROM to the device. The message remains if the HistoROM and the device have different software versions. The message goes out if you copy the data from the device to the HistoROM. – Device reset codes such as 7864 do not have any effect on the HistoROM. That means that if you do a reset, the configurations in the HistoROM and in the device may not be the same. → See also Operating Instructions BA00270P (Deltabar S), BA00271P (Cerabar S), BA00332P (Deltapilot S) Section "Copying configuration data".	59
707 (A707)	Alarm B	Funktion check (C)	B>X-VAL. of lin. table out of edit limits.	– At least one X-VALUE in the linearisation table is either below the value for HYDR. PRESS MIN. or MIN. LEVEL or above the value for HYDR. PRESS. MAX. or LEVEL MAX.	– Carry out calibration again. (→ See also these Operating Instructions, chapter 5.)	38
710 (W710)	Warning C	Funktion check (C)	B>Set span too small. Not allowed.	– Values for calibration (e.g. lower range value and upper range value) are too close together. – The sensor was replaced and the customer-specific configuration does not suit the sensor. – Unsuitable download carried out.	– Adjust calibration to suit sensor. (→ See also Page 120, parameter description MINIMUM SPAN.) – Adjust calibration to suit sensor. – Replace sensor with a suitable sensor. – Check configuration and perform download again.	51

Code	Error type/ NA 64	Corresponds NE 107	Message/description	Cause	Measure	Priority
711 (A711)	Alarm B	Funktion check (C)	B>LRV or URV out of edit limits	– Lower range value and/or upper range value undershoot or overshoot the sensor range limits. – The sensor was replaced and the customer-specific configuration does not suit the sensor. – Unsuitable download carried out.	– Reconfigure lower range value and/or upper range value to suit the sensor. Pay attention to position factor. – Reconfigure lower range value and/or upper range value to suit the sensor. Pay attention to position factor. – Replace sensor with a suitable sensor. – Check configuration and perform download again.	37
713 (A713)	Alarm B	Funktion check (C)	B>100% POINT level out of edit limits	– The sensor was replaced.	– Carry out calibration again.	39
715 (E715)	Error C Factory setting: Warning C	Out of specification (S)	C>Sensor over temperature	– The temperature measured in the sensor is greater than the upper nominal temperature of the sensor. (→ See also Page 120, parameter description Tmax SENSOR.) – Unsuitable download carried out.	– Reduce process temperature/ ambient temperature. – Check configuration and perform download again.	32
716 (E716)	Error B Factory setting: Alarm B	Failure (F)	B>Process isolating diaphragm broken	– Sensor defect.	– Replace sensor. – Reduce pressure.	24
717 (E717)	Error C Factory setting: Warning C	Out of specification (S)	C>Transmitter over temperature	– The temperature measured in the electronics is greater than the upper nominal temperature of the electronics (+88 °C). – Unsuitable download carried out.	– Reduce ambient temperature. – Check configuration and perform download again.	34
718 (E718)	Error C Factory setting: Warning C	Out of specification (S)	C>Transmitter under temperature	– The temperature measured in the electronics is smaller than the lower nominal temperature of the electronics (−43 °C). – Unsuitable download carried out.	– Increase ambient temperature. Insulate device if necessary. – Check configuration and perform download again.	35
719 (A719)	Alarm B	Funktion check (C)	B>Y-VAL of lin. table out of edit limits	– At least on Y-VALUE in the linearisation table is below the MIN. TANK CONTANT or above the MAX. TANK CONTENT.	– Carry out calibration again.	40

Code	Error type/ NA 64	Corresponds NE 107	Message/description	Cause	Measure	Priority
720 (E720)	Error C Factory setting: Warning C	Out of specification (S)	C>Sensor under temperature	– The temperature measured in the sensor is smaller than the lower nominal temperature of the sensor. (→ See also Page 120, parameter description Tmin SENSOR.) – Unsuitable download carried out. – Loose connection at sensor cable	– Increase process temperature/ ambient temperature. – Check configuration and perform download again. – Wait a short period of time and tighten the connection, or avoid loose connection.	33
721 (A721)	Alarm B	Funktion check (C)	B>ZERO POSITION level out of edit limits	– LEVEL MIN or LEVEL MAX has been changed.	– Perform reset (Code 2710) and carry out calibration again.	41
722 (A722)	Alarm B	Funktion check (C)	B>EMPTY CALIB. or FULL CALIB. out of edit limits	– LEVEL MIN or LEVEL MAX has been changed.	– Perform reset (Code 2710) and carry out calibration again.	42
723 (A723)	Alarm B	Funktion check (C)	B>MAX. FLOW out of edit limits	– FLOW-MEAS. TYPE has been changed.	– Carry out calibration again.	43
725 (A725)	Alarm B	Failure (F)	B>Sensor connection error, cycle disturbance	– Electromagnetic effects are greater than specifications in the technical data. → See Technical Information TI00382P (Deltabar S), TI00383P (Cerabar S) or TI00416P (Deltapilot S). – Setscrew loose. – Sensor or main electronics defect.	– Block off electromagnetic effects or eliminate source of disturbance. – Retighten setscrew with 1 Nm (0,74 lbf ft) (see chapter "Rotating the housing" in BA00270P (Deltabar S), BA00271P (Cerabar S), BA00332P (Deltapilot S). – Replace sensor or main electronics.	25
726 (E726)	Error C Factory setting: ▪ Deltapilot: Warning C ▪ Deltabar/ Cerabar: Alarm C	Out of specification (S)	C>Sensor temperature error - overrange	– Electromagnetic effects are greater than specifications in the technical data. → See Technical Information TI00382P (Deltabar S), TI00383P (Cerabar S) or TI00416P (Deltapilot S). – Process temperature is outside permitted range. – Sensor defect.	– Block off electromagnetic effects or eliminate source of disturbance. – Check temperature present, reduce or increase if necessary. – If the process temperature is within the permitted range, replace sensor.	31

Code	Error type/ NA 64	Corresponds NE 107	Message/description	Cause	Measure	Priority
727 (E727)	Error C Factory setting: Warning C	Out of specification (S)	C>Sensor pressure error - overrange	– Electromagnetic effects are greater than specifications in the technical data. → See Technical Information TI00382P (Deltabar S), TI00383P (Cerabar S) or TI00416P (Deltapilot S). – Pressure is outside permitted range. – Sensor defect.	– Block off electromagnetic effects or eliminate source of disturbance. – Check pressure present, reduce or increase if necessary. – If the pressure is within the permitted range, replace sensor.	28
728 (A728)	Alarm B	Failure (F)	B>RAM error	– Fault in the main electronics. – Main electronics defect.	– Briefly disconnect device from the power supply. – Replace main electronics.	2
729 (A729)	Alarm B	Failure (F)	B>RAM error	– Fault in the main electronics. – Main electronics defect.	– Briefly disconnect device from the power supply. – Replace main electronics.	3
730 (E730)	Error C Factory setting: Warning C	Out of specification (S)	C>LRV user limits exceeded	– Pressure measured value has undershot the value specified for the Pmin ALARM WINDOW parameter. – Loose connection at sensor cable	– Check system/pressure measured value. – Change value for Pmin ALARM WINDOW if necessary. (→ See also Page 129, parameter description Pmin ALARM WINDOW.) – Wait a short period of time and tighten the connection, or avoid loose connection.	46
731 (E731)	Error C Factory setting: Warning C	Out of specification (S)	C>URV user limits exceeded	– Pressure measured value has overshot the value specified for the Pmax ALARM WINDOW parameter. – Loose connection at sensor cable	– Check system/pressure measured value. – Change value for Pmax ALARM WINDOW if necessary. (→ See also Page 129, parameter description Pmax ALARM WINDOW.) – Wait a short period of time and tighten the connection, or avoid loose connection.	45
732 (E732)	Error C Factory setting: Warning C	Out of specification (S)	C>LRV Temp. User limits exceeded	– Temperature measured value has undershot the value specified for the Tmin ALARM WINDOW parameter.	– Check system/temperature measured value. – Change value for Tmin ALARM WINDOW if necessary. (→ See also Page 129, parameter description Tmin ALARM WINDOW.)	48
733 (E733)	Error C Factory setting: Warning C	Out of specification (S)	C>URV Temp. User limits exceeded	– Temperature measured value has overshot the value specified for the Tmax ALARM WINDOW parameter.	– Check system/temperature measured value. – Change value for Tmax ALARM WINDOW if necessary. (→ See also Page 129, parameter description Tmax ALARM WINDOW.)	47
736 (A736)	Alarm B	Failure (F)	B>RAM error	– Fault in the main electronics. – Main electronics defect.	– Briefly disconnect device from the power supply. – Replace main electronics.	4
737 (A737)	Alarm B	Failure (F)	B>Measurement error	– Fault in the main electronics. – Main electronics defect.	– Briefly disconnect device from the power supply. – Replace main electronics.	20

Code	Error type/ NA 64	Corresponds NE 107	Message/description	Cause	Measure	Priority
738 (A738)	Alarm B	Failure (F)	B>Measurement error	– Fault in the main electronics. – Main electronics defect.	– Briefly disconnect device from the power supply. – Replace main electronics.	19
739 (A739)	Alarm B	Failure (F)	B>Measurement error	– Fault in the main electronics. – Main electronics defect.	– Briefly disconnect device from the power supply. – Replace main electronics.	23
740 (E740)	Error C Factory setting: Warning C	Maintenance request (M)	C>Calculation overflow, bad configuration	– Level measuring mode: the measured pressure has undershot the value for HYDR. PRESS. MIN. or overshot the value for HYDR. PRESS MAX. – Level measuring mode: The measured level did not reach the LEVEL MIN value or exceeded the LEVEL MAX value. – Flow measuring mode: the measured pressure has undershot the value for MAX. PRESS FLOW.	– Check configuration and carry out calibration again if necessary. – Select a device with a suitable measuring range. – Check configuration and carry out calibration again if necessary. (→ See also parameter description LEVEL MIN., Page 93.) – Check configuration and carry out calibration again if necessary. – Select a device with a suitable measuring range.	27
741 (A741)	Alarm B	Funktion check (C)	B>TANK HEIGHT out of edit limits	– LEVEL MIN or LEVEL MAX has been changed.	– Perform reset (Code 2710) and carry out calibration again.	44
742 (A742)	Alarm B	Failure (F)	B>Sensor connection error (upload)	– Electromagnetic effects are greater than specifications in the technical data. → See Technical Information TI00382P (Deltabar S), TI00383P (Cerabar S) or TI00416P (Deltapilot S). This message normally only appears briefly. – Cable connection sensor – main electronics disconnected. – Sensor defect.	– Wait a few minutes. – Perform reset (Code 7864) and carry out calibration again. – Check cable connection and repair if necessary. – Replace sensor.	18
743 (E743)	Alarm B	Failure (F)	B>Electronic PCB error during initialisation	– This message normally only appears briefly. – Main electronics defect.	– Wait a few minutes. – Restart the device. Perform reset (Code 62). – Replace main electronics.	14
744 (A744)	Alarm B	Failure (F)	B>Main electronic PCB error	– Electromagnetic effects are greater than specifications in the technical data. → See Technical Information TI00382P (Deltabar S), TI00383P (Cerabar S) or TI00416P (Deltapilot S). – Main electronics defect.	– Restart the device. Perform reset (Code 62). – Block off electromagnetic effects or eliminate source of disturbance. – Replace main electronics.	11
745 (W745)	Warning C	Maintenance request (M)	C>Sensor data unknown	– Sensor does not suit the device (electronic sensor nameplate). Device continues measuring.	– Replace sensor with a suitable sensor.	56

Code	Error type/ NA 64	Corresponds NE 107	Message/description	Cause	Measure	Priority
746 (W746)	Warning C	Funktion check (C)	C>Sensor connection error - initialising	– Electromagnetic effects are greater than specifications in the technical data. This message normally only appears briefly. → See Technical Information TI00382P (Deltabar S), TI00383P (Cerabar S) or TI00416P (Deltapilot S). – Overpressure or low pressure present.	– Wait a few minutes. – Restart the device. Perform reset (Code 7864). – Block off electromagnetic effects or eliminate source of disturbance. – Reduce or increase pressure.	26
747 (A747)	Alarm B	Failure (F)	B>Sensor software not compatible to electronics	– Sensor does not suit the device (electronic sensor nameplate).	– Replace sensor with a suitable sensor.	16
748 (A748)	Alarm B	Failure (F)	B>Memory failure in signal processor	– Electromagnetic effects are greater than specifications in the technical data. → See Technical Information TI00382P (Deltabar S), TI00383P (Cerabar S) or TI00416P (Deltapilot S). – Main electronics defect.	– Block off electromagnetic effects or eliminate source of disturbance. – Replace main electronics.	15

10.1.1 On-site display error messages

If the device detects a defect in the on-site display during initialization, the following error messages can be displayed:

Message	Measure
Initialization, VU Electr. Defect A110	Exchange on-site display.
Initialization, VU Electr. Defect A114	
Initialization, VU Electr. Defect A281	
Initialization, VU Checksum Err. A110	
Initialization, VU Checksum Err. A112	
Initialization, VU Checksum Err. A171	

10.2 Response of outputs to errors

The device differentiates between the error types Alarm, Warning and Error.
→ See also Section 10.1 "Messages" und Page 112 ff, Table 22: OUTPUT and Page 127 ff, Table 31: MESSAGES.

Output	A (Alarm)	W (Warning)	E (Error: Alarm/Warning)
Current output	Assumes the value specified via the OUTPUT FAIL MODE[1)], ALT. CURR. OUTPUT[1] and SET MAX. ALARM[1] parameter. → See also the following section "Configuring current output for an alarm".	Device continues measuring.	For this error, you can enter whether the device should react as in the event of an alarm or as in the event of a warning. See corresponding "Alarm" or "Warning" column. (→ See also these Operating Instructions, parameter description SELECT ALARM TYPE.)
Bargraph (on-site display)	The bargraph adopts the value defined by the OUTPUT FAIL MODE [1] parameter.	The bargraph adopts the value which corresponds to the current value.	→ See this table, column "Alarm" or "Warning".
On-site display	– The measured value and message are displayed alternately – Measured value display: ϟ -symbol is permanently displayed. Message display – 3-digit number such as A122 and description	– The measured value and message are displayed alternately – Measured value display: ϟ -symbol flashes. Message display: – 3-digit number such as W613 and description	– The measured value and message are displayed alternately – Measured value display: see corresponding "Alarm" or "Warning" column Message display: – 3-digit number such as E731 and description
Remote operation (Digital communication)	In the case of an alarm, the ALARM STATUS[2)] parameter displays a 3-digit number such as 122 for "Sensor not connected".	In the case of a warning, the ALARM STATUS[2] parameter displays a 3-digit number such as 613 for "Simulation is active".	In the case of an error, the ALARM STATUS[2] parameter displays a 3-digit number such as 731 for "URV user limits exceeded".

1) Menu path: (GROUP SELECTION →) OPERATING MENU → OUTPUT

2) Menu path: (GROUP SELECTION →) OPERATING MENU → MESSAGES

10.3 Confirming messages

Depending on the settings for the ALARM DISPL. TIME (→ Page 128) and ACK. ALARM MODE (→ Page 127) parameters, the following measures should be taken to clear a message:

Settings [1]	Measures
– ALARM DISPL. TIME = 0 s – ACK. ALARM MODE = off	– Rectify cause of the message (see also Section 10.1).
– ALARM DISPL. TIME > 0 s – ACK. ALARM MODE = off	– Rectify cause of the message (see also Section 10.1). – Wait for the alarm display time to elapse.
– ALARM DISPL. TIME = 0 s – ACK. ALARM MODE = on	– Rectify cause of the message (see also Section 10.1). – Confirm message using ACK. ALARM parameter.
– ALARM DISPL. TIME > 0 s – ACK. ALARM MODE = on	– Rectify cause of the message (see also Section 10.1). – Confirm message using ACK. ALARM parameter. – Wait for the alarm display time to elapse. If a message appears and the alarm display time elapses before the message has been acknowledged, the message will be cleared once it has been acknowledged.

1) Menu path for ALARM DISPL. TIME and ACK. ALARM MODE: (GROUP SELECTION →) OPERATING MENU → DIAGNOSTICS → MESSAGES

If the on-site display displays a message, you can delete it with the E key.
If there are several messages, the on-site display shows the message which has the highest priority (see also Section 10.1). Once you have deleted this message using the E key, the message with the next highest priority is displayed. You can use the E key to delete each message, one after the other.
The ALARM STATUS parameter continues to display all the messages present.

Index

Numerics

100% POINT (813), "Height linearized" level type 96
100% POINT (813), "Linear" level type 86
4TH VALUE 117
4TH VALUE IS 117

A

ACK. ALARM (500) 127
ACK. ALARM MODE (401) 127
ACTIV LIN. TAB. X. 109
ACTIV LIN. TAB. Y. 109
ADDITIONAL INFO. (272) 117
ADJUST DENSITY (007), "Level Easy Height" level selection 75
ADJUST DENSITY (007)/(316), "Level" extended setup 101
ADJUST DENSITY (316), "Height linearized" level type . 94
ADJUST DENSITY (316), "Linear" level type 83
ADJUSTED DENSITY (810), "Height linearized" level type . 94
ADJUSTED DENSITY (810), "Linear" level type 83
ALARM DELAY (336) 128
ALARM DISPL. TIME (480) 128
ALARM STATUS (046) 127
ALLOWED MAX. TEMP (359) 117
ALLOWED MIN. TEMP (358) 117
ALT. CURR. OUTPUT (597) 114
ALTERNATE DATA (423) 112
ASSIGN CURRENT (760) 114

B

BOLTS MATERIAL. 119
BURST MODE. 115
BURST OPTION 115
BUS ADDRESS (345) 115

C

CALIB. OFFSET (319) 68
CALIBRATION MODE (008), "Level Easy Height" level selection 75
CALIBRATION MODE (008), "Level Easy Pressure" level selection 72
CALIBRATION MODE (392), "Height linearized" level type 93
CALIBRATION MODE (392), "Linear" level type. 82
COMB. MEASURAND (806). 90
CONFIG RECORDER (352) 117
CORRECTED PRESS. (434), "Flow" measuring mode . . 123
CORRECTED PRESS. (434), "Level" measuring mode . . 122
CORRECTED PRESS. (434), "Pressure" measuring mode . . . 121
COUNTER P > Pmax (380) 123
COUNTER P Pmin (467) 123
COUNTER T > Tmax (404) 124
COUNTER T Tmin (472) 124
CURR. CHARACT. (694), (695), (696), (764) 113
CURR. TRIM 20mA (042) 130
CURR. TRIM 4mA (045) 129
CURRENT MODE (052) 115
CUST. TAG NUMBER (055) 117
CUST. UNIT FACT. F (609) 99
CUST. UNIT FACT. H (705), "Height linearized" level type . 90, 95
CUST. UNIT FACT. H (705), "Linear" level type 80, 85
CUST. UNIT FACT. M (703), "Height linearized" level type 92
CUST. UNIT FACT. M (703), "Linear" level type. 82
CUST. UNIT FACT. M (703), "Pressure linearized" level type 89
CUST. UNIT FACT. P (317) 69, 71, 74, 78, 97
CUST. UNIT FACT. V (607), "Height linearized" level type . 91
CUST. UNIT FACT. V (607), "Linear" level type 81, 84
CUST. UNIT FACT. V (607), "Pressure linearized" level type 88
CUSTOMER UNIT F (610) 99
CUSTOMER UNIT H (706), "Height linearized" level type. . 90, 95
CUSTOMER UNIT H (706), "Linear" level type 79, 85
CUSTOMER UNIT M (704), "Height linearized" level type . 92
CUSTOMER UNIT M (704), "Linear" level type 81
CUSTOMER UNIT M (704), "Pressure linearized" level type 88
CUSTOMER UNIT P (075) 69, 71, 74, 78, 97
CUSTOMER UNIT V (608), "Height linearized" level type. . 91
CUSTOMER UNIT V (608), "Linear" level type 80, 84
CUSTOMER UNIT V (608), "Pressure linearized" level type 87

D

DAMPING VALUE (247) . 65–67, 70, 73, 77, 86, 89, 96, 100
DENSITY UNIT (001), "Level Easy Height" level selection. . 75
DENSITY UNIT (001)/(812), "Level" extended setup . 101
DENSITY UNIT (812), "Height linearized" level type 94
DENSITY UNIT (812), "Linear" level type 83
DEVICE DESIGN. (350) 117
DEVICE REVISION (699) 115
DEVICE SERIAL No (354). 117
DEVICE TYPE (002), Deltapilot S 115
DEVICE TYPE (351), Deltabar S 115
DEVICE TYPE (802), Cerabar S 115
DIAPHRAG. MAT. -. 119
DIAPHRAG. MAT. + ... 119
DIGITS SETS (840) 112
DIP STATUS (363) 118
DISPLAY CONTRAST (339) 112
DOWNLOAD SELECT (014). 125
DRAIN VENT MAT. 119
DRAIN VENT POS. 119

E

EDITOR TABLE (770), on-site operation 106
EDITOR TABLE (809), on-site operation 105
EDITOR TABLE, digital communication 108–109
ELECTR. SERIAL No (386) 117
EMPTY CALIB. (010), "Level Easy Height" level selection . . 76
EMPTY CALIB. (010), "Level Easy Pressure" level selection 72
EMPTY CALIB. (314), "Height linearized" level type . . . 93
EMPTY CALIB. (314), "Linear" level type 82
EMPTY CALIB. (314)/(010), QUICK SETUP 66
EMPTY HEIGHT. (009), "Level Easy Height" level selection 76
EMPTY PRESSURE (011), "Level Easy Pressure" level selection 72
EMPTY PRESSURE (710), "Height linearized" level type 94
EMPTY PRESSURE (710), "Linear" level type 83
ENTER RESET CODE (047) 124
ERROR No. 128

F

FACT. U. U. TOTAL. 1 (329) 110
FACT. U. U. TOTAL. 2 (330) 111
FILL FLUID 120
FILLING FLUID (366) 120
FLOW-MEAS. TYPE (640) 98
FULL CALIB. (004), "Level Easy Height" level selection. 76
FULL CALIB. (004), "Level Easy Pressure" level selection . . 72–73
FULL CALIB. (315), "Height linearized" level type 94
FULL CALIB. (315), "Linear" level type 83
FULL CALIB. (315)/(004), QUICK SETUP 66
FULL HEIGHT (006), "Level Easy Height" level selection 77
FULL PRESSURE (005), "Level Easy Pressure" level selection 73
FULL PRESSURE (711), "Height linearized" level type. . 94
FULL PRESSURE (711), "Linear" level type 83

G

GET LRV (309), "Pressure" measuring mode 70
GET URV (310), "Pressure" measuring mode 70

H

HARDWARE REV. (266) 117
HART DATE (481) 116
HART MESSAGE (271) 116
HART PRIMARY VALUE IS 116
HART VERSION (585) 114
HEIGHT UNIT (011), "Level Easy Height" level selection 75
HEIGHT UNIT (708), "Height linearized" level type . 90, 95
HEIGHT UNIT (708), "Linear" level type 79, 85
HistoROM AVAIL. (831) 125
HistoROM CONTROL (832) 125
HYDR. PRESS MAX. (761) 89
HYDR. PRESS MIN. (775) 89

I

INSERT PIN NO (048) 125

L

LANGUAGE (079) 62
LAST DIAG. CODE (564) 127
LEVEL BEFORE LIN (050) 122
LEVEL MAX (712) 93
LEVEL MIN (755) 93
LEVEL MODE (718) 78
LEVEL SELECTION (020) 63
LIN. EDIT MODE (397), on-site operation 105
LIN. EDIT MODE, digital communication 107
LIN. MEASURAND (804) 79
LINd. MEASURAND (805) 87
LINEAR/SQROOT (390) 114
LINE-NUMB (549), on-site operation 105–106
LINE-NUMB, digital communication 108
LONG TAG NUMBER (305) 117
LOW FLOW CUT-OFF (442) 103

M

MAIN DATA FORMAT (688) 112
MANUFACTOR ID (432) 116
MASS FLOW UNIT (571) 99
MASS UNIT (709), "Height linearized" level type 92
MASS UNIT (709), "Linear" level type 81
MASS UNIT (709), "Pressure linearized" level type 88
MAT. MEMBRANE (365) 120
MAT. PROC. CONN. - (361) 118
MAT. PROC. CONN. + (360) 118
MAX PRESS. FLOW (634) 67, 100
MAX. FLOW (311) 67, 100
MAX. MEAS. PRESS. (383) 123
MAX. MEAS. TEMP. (471) 124
MEAS. VAL. TREND (378) 121–123
MEASURED VALUE, "Flow" measuring mode 122
MEASURED VALUE, "Level" measuring mode 121
MEASURED VALUE, "Pressure" measuring mode 121
MEASURING MODE (389), on-site display 62
MEASURING TABLE (549) 106
MEASURING TABLE (717) 106
MENU DESCRIPTOR (419) 111
MIN. MEAS. PRESS. (469) 123
MIN. MEAS. TEMP. (474) 124
MIN. PRESS. FLOW 67
MINIMUM SPAN (591) 120
MOUNTING THREAD 119

N

NEG. FLOW TOT. 1 (400) 110
NEG. FLOW TOT. 2 (416) 111
NORM FLOW UNIT (661) 98
NR OF REMOTE SE 120
NUTS MATERIAL 119

O

OFFSET 20mA TRIM (044) 130
OFFSET 4mA TRIM (043) 130
OPERATING HOURS (409) 124
OUTPUT CURRENT (254) 112
OUTPUT FAIL MODE (388) 113

OUTPUT UNIT (023), "Level Easy Height" level selection . . 75
OUTPUT UNIT (023), "Level Easy Pressure" level selection . 71

P
PCB COUNT
T Tmin (492) 124
PCB COUNT T 124
PCB COUNT T > Tmax (488) 124
PCB MAX. TEMP. (490) 124
PCB MIN. TEMP. (494) 124
PCB TEMPERATURE (357) 117
Pmax ALARM WINDOW (333) 129
Pmax PROC. CONN. (570) 118
Pmax SENS. DAMAGE (252) 120
Pmin ALARM WINDOW (332) 129
Pmin SENS. DAMAGE (251) 120
POS. INPUT VALUE (563) 64–65, 68
POS. ZERO ADJUST (685) 64–65, 67–68
PREAMBLE NUMBER (036) 116
PRESS. ENG. UNIT (060) 69–70, 74, 77, 97
PRESS. SENS HILIM (485) 120
PRESS. SENS LOLIM (484) 120
PRESSURE (301), "Flow" measuring mode 123
PRESSURE (301), "Level" measuring mode 122
PRESSURE, "Pressure" measuring mode 121
PRIMARY VALUE 116
PROC. CONN. TYPE (482) 118
PROCESS DENSITY (025)/(811) 101

Q
Quick Setup "Flow" menu 66
Quick Setup "Level" menu 65
Quick Setup "Pressure" menu 64

R
REMOTE SEAL - 119
REMOTE SEAL + ... 119
RESET ALL ALARMS (603) 128
RESET PEAKHOLD (382) 124
RESET TOTALIZER1 (331) 111

S
SEAL TYPE (362) 119
SECONDARY VAL. IS 116
SECONDARY VALUE 116
SELECT ALARMTYPE (595), (600) 128
SENS H/WARE REV (487) 120
SENSOR MEAS.TYPE (581) 120
SENSOR PRESSURE (584), "Pressure" measuring mode 121–122
SENSOR PRESSURE (584), "Safety confirm." group 123
SENSOR SER. No. (250) 120
SENSOR TEMP. (367) 121–123
SET LRV (013), "Level Easy Height" level selection 77
SET LRV (013), "Level Easy Pressure" level selection . . . 73
SET LRV (245), "Pressure" measuring mode 64, 69
SET LRV (637), "Flow" extended setup 103
SET LRV (719), "Level" basic setup 86
SET LRV (762), "Level" extended setup 102
SET MAX. ALARM (342) 114
SET MIN. CURRENT (343) 114
SET URV (012), "Level Easy Height" level selection 77
SET URV (012), "Level Easy Pressure" level selection . . . 73
SET URV (246), "Pressure" measuring mode 64, 70
SET URV (638), "Flow" extended setup 104
SET URV (720), "Level" basic setup 86
SET URV (763), "Level" extended setup 102
SET. L. FL. CUT-OFF (323) 103
Sicherheitshinweise 4
SIM. CURRENT (270) 126
SIM. ERROR NO. (476) 127
SIM. LEVEL (714) 126
SIM. PRESSURE (414) 126
SIM. TANK CONT. (715) 126
SIM.FLOW VALUE (639) 126
SIMULATION MODE (413) 126
SOFTWARE VERSION (264) 117
STD. FLOW UNIT (660) 98
SUPPRESSED FLOW (375) 123

T
TABLE ACTIVATE 109
TABLE SELECTION (808), on-site operation 105
TABLE SELECTION, digital communication 107
TANK CONTENT (370) 122
TANK CONTENT MAX (713) 104, 107
TANK CONTENT MIN (759) 104, 107
TANK DESCRIPTION (815) 106, 109
TANK HEIGHT (859) 85
TANK VOLUME (858) 84
TEMP. ENG. UNIT (318), "Flow" measuring mode . . . 103
TEMP. ENG. UNIT (318), "Level" measuring mode . . . 101
TEMP. ENG. UNIT (318), "Pressure" measuring mode 100
THIRD VALUE 116
THIRD VALUE IS 116
THREAD 119
Tmax ALARM WINDOW (335) 129
Tmax SENSOR (369) 120
Tmin ALARM WINDOW (334) 129
Tmin SENSOR (368) 120
TOT. 1 USER UNIT (627) 110
TOT. 2 USER UNIT (628) 111
TOTAL. 1 OVERFLOW (655) 123
TOTAL. 2 OVERFLOW (658) 123
TOTALIZER 1 (652) 123
TOTALIZER 1 UNIT (398), (662), (664), (666) 110
TOTALIZER 2 (657) 123
TOTALIZER 2 UNIT (399), (663), (665), (667) 111

U
UNIT FLOW (391) 98
UNIT VOLUME (313), "Height linearized" level type 91
UNIT VOLUME (313), "Linear" level type 80, 84
UNIT VOLUME (313), "Pressure linearized" level type . . 87

X
X-VAL. (550), on-site operation 106
X-VAL., digital communication 108

Y

Y-VAL. (551), on-site operation 105–106
Y-VAL., digital communication 108

Z

ZERO POSITION (814), "Height linearized" level type . . 96
ZERO POSITION (814), "Linear" level type 86

146

147

www.addresses.endress.com

Endress+Hauser
People for Process Automation

A.10.3 Safety instructions

XA00244P-F/00/A3/16.17
71383397

Products Solutions Services

Safety Instructions
Cerabar S PMC71, PMP71, PMP75

4-20 mA HART, PROFIBUS PA, FOUNDATION Fieldbus

ATEX: II 1/2 G Ex ia IIC T6...T4/T3 Ga/Gb
IECEx: Ex ia IIC T6...T4/T3 Ga/Gb

DE Dokument: XA00244P-F
Sicherheitshinweise für elektrische Betriebsmittel für explosionsgefährdete Bereiche → 🗎 5

EN Document: XA00244P-F
Safety instructions for electrical apparatus for explosion-hazardous areas → 🗎 13

FR Document: XA00244P-F
Conseils de sécurité pour matériels électriques destinés aux zones explosibles → 🗎 21

Endress+Hauser
People for Process Automation

BG - Правила за техниката на безопасност за електрически средства за производство във взривоопасни зони. Ако не разбирате езика на това ръководство има възможност да си поръчате при нас едно ръководство, преведено на езика на Вашата страна.
ЕС декларация за съответствие
Производителят Endress+Hauser декларира с това заявление за съответствие и с предявяването на сертификата CE, че този продукт отговаря на изискванията на съответните европейски директиви. Прилаганите директиви, норми и документи са указани в заявлението за съответствие.

CS - Bezpečnostní pokyny pro elektrické přístroje v místech s nebezpečím výbuchu. Pokud nemáte možnost přečíst si tento návod, můžete si u nás objednat návod přeložený do svého jazyka.
EU prohlášení o shodě
Společnost Endress+Hauser prohlašuje prostřednictvím tohoto prohlášení a použitím značky CE, že tento výrobek vyhovuje příslušným evropským směrnicím. Zmíněné směrnice, normy a dokumenty jsou uvedeny v Prohlášení o shodě.

DA - Sikkerhedsforskrifter for elektriske apparater certificeret til brug i eksplosionsfarlige områder. Hvis du ikke forstår denne manual, kan en oversat kopi af den på dit eget sprog bestilles fra os.
EU-overensstemmelseserklæring
Med denne overensstemmelseserklæring og tilføjelsen af CE-mærket sikrer producenten Endress+Hauser, at produktet er i overensstemmelse med relevante europæiske direktiver. Dokumentation for overensstemmelsen gives i de anførte direktiver, standarder og dokumenter.

EL - Οδηγίες ασφαλείας ηλεκτρικών συσκευών για επικίνδυνες για έκρηξη περιοχές. Σε περίπτωση που δεν μπορείτε να διαβάσετε αυτές τις οδηγίες, τότε μπορείτε να παραγγείλετε ένα αντίτυπο μεταφρασμένο στη γλώσσα σας.
Δήλωση συμμόρφωσης ΕΕ
Με αυτή τη δήλωση πιστότητας και την τοποθέτηση του σήματος CE ο κατασκευαστής Endress+Hauser δηλώνει, ότι αυτό το προϊόν συμορφώνεται με τις ευρωπαϊκές οδηγίες που πρέπει να εφαρμοστούν. Οι οδηγίες, τα πορότυπα και τα έγγραφα που εφαρμόστηκαν αναφέρονται στη δήλωση πιστότητας.

ES - Instrucciones de seguridad de aparatos eléctricos homologados para su utilización en áreas expuestas a riesgos de deflagración. Si no entiende este manual, puede pedir un ejemplar en su idioma.
Declaración UE de conformidad
Por la presente declaración y la inclusión de la marca CE, el fabricante Endress+Hauser, declara que el producto cumple con las directivas europeas pertinentes. Las directivas, normas y documentos de aplicación se indican en la declaración de conformidad.

ET - Ohutusjuhised plahvatusohtlikus keskkonnas kasutatavate elektriseadmete kohta. Kui Te ei saa käesolevast juhendist aru, võite meilt tellida Teie riigikeelde tõlgitud juhendi.
ELi vastavusdeklaratsioon
Tootja Endress+Hauser kinnitab juurdelisatud vastavusdeklaratsiooni esitamisega ja CE-märgise kandmisega tootele, et käesolev toode vastab kohaldatavate Euroopa Liidu direktiivide nõuetele. Kohaldatavad direktiivid, standardid ja dokumendid on ära toodud vastavusdeklaratsioonis.

FI - Turvallisuusohjeita sähkölaitteille, jotka on vahvistettu käytettäväksi räjähdysvaarallisilla alueilla. Jos et ymmärrä tätä käsikirjaa, voit tilata meiltä käännöksen omalla kansallisella kielellä.
EU-vaatimustenmukaisuusvakuutus
Valmistaja Endress+Hauser vakuuttaa tällä vaatimustenmukaisuustodistuksella ja CE-merkin kiinnittämisellä, että tämä tuote täyttää sovellettavien EU-direktiivien määräykset. Sovellettavat direktiivit, normit ja dokumentit on merkitty vaatimustenmukaisuustodistukseen.

HR - Sigurnosni naputci za elektromaterijal u sredini u kojoj prijeti opasnost od eksplozije. Ako Vam nije moguće čitati ovaj naputak, onda imate mogućnost da kod nas naručite naputak sastavljen na Vašem materinskom jeziku.
EU izjava o sukladnosti
Dobavljač Endress+Hauser jamči ovom izjavom i stavljanjem oznake CE da ovaj proizvod udovoljava zahtjevima europskih direktiva koje su na snazi. U izjavi o usuglašenosti se navode direktive, norme i dokumenti koji su na snazi.

HU - Biztonsági információk robbanásveszélyes területre való elektromos eszközökhöz. Amennyiben nem tudja elolvasni ezt az útmutatót, akkor megrendelheti az Ön anyanyelvére leforditva is.
EU-megfelelőségi nyilatkozat
Az Endress+Hauser mint gyártó jelen megfelelőségi nyilatkozattal és a CE-jelzés felhelyezésével kijelenti, hogy ez a termék megfelel az alkalmazandó európai irányelveknek. Az alkalmazott irányelvek, szabványok és dokumentumok a megfelelőségi nyilatkozatban fel vannak tüntetve.

IT - Istruzioni di sicurezza per apparecchiature elettriche certificate per l'utilizzo in aree con pericolo di esplosione. Se il presente manuale non risulta comprensibile potete ordinarcene una copia tradotta nella vostra lingua.
Dichiarazione di conformità UE
Con questa dichiarazione e con l'applicazione del marchio CE, il costruttore Endress+Hauser, assicura che il prodotto è conforme alle direttive europee vigenti. Prova della conformità è fornita dall'osservanza delle direttive, delle norme e dei documenti elencati.

LT - Elektros įrenginio saugumo nurodymai, susiję su sprogimo zonomis. Jeigu negalite perskaityti šios instrukcijos, kreipkitės į mus, kad užsisakytumėte į jūsų gimtąją kalbą išverstą instrukciją.
ES atitikties deklaracija
Gamintojas Endress+Hauser šia atitikties deklaracija ir CE ženklinimu patvirtina, kad gaminys atitinka taikytinas ES direktyvas. Taikomos direktyvos, normos ir dokumentai yra pateikiami atitikties deklaracijoje.

LV - Drošības norādījumi elektrisko darba instrumentu lietošanai apgabalos, kas pakļauti sprādzienbīstamībai. Ja Jums nav iespēju izlasīt šos norādījumus, Jūs varat pasūtīt pie mums tulkojumu Jūsu valsts valodā.
ES atbilstības deklarācija
Ražotājs Endress+Hauser ar šo atbilstības apliecinājumu un CE zīmola lietojumu apstiprina, ka produkts izgatavots sakaņā ar atbilstošajām Eiropas vadlīnijām. Piemērotās vadlīnijas, normas un dokumenti atrunāti atbilstības apliecinājumā.

NL - Veiligheidsinstructies voor elektrisch materieel in explosiegevaarlijke omgeving. Wanneer u deze handleiding niet kunt lezen, kunt u een in uw landstaal vertaalde handleiding bij ons bestellen.
EU-conformiteitsverklaring
De leverancier Endress+Hauser waarborgt met deze verklaring en het aanbrengen van het CE-teken, dat dit product overeenstemt met de geldende Europese richtlijnen. De geldende richtlijnen, normen en documenten zijn aangegeven in de conformiteitsverklaring.

PL - Wskazówki dot. bezpieczeństwa dla urządzeń elektrycznych stosowanych w obszarze zagrożonym wybuchem. Jeśli niniejsza instrukcja napisana jest w języku, którym się nie posługujesz, możesz zamówić u nas przetłumaczony dokument.
Deklaracja zgodności UE
Producent Endress+Hauser w niniejszej deklaracji zgodności wraz z nadaniem znaku CE oświadcza, że produkt ten jest zgodny z obowiązującą Europejską Dyrektywą. Zastosowane wytyczne, normy oraz dukumenty podane są w deklaracji zgodności.

PT - Instruções de segurança para dispositivos eléctricos certificados para utilização em áreas de risco de incêndio. Se não compreender este manual, pode encomendar-nos directamente uma cópia na sua língua.
Declaração UE de conformidade
Com esta declaração de conformidade e a aplicação da marca CE, o fabricante Endress+Hauser, garante que o produto obedece às directivas europeias a aplicar. As directivas, normas e documentos são apresentadas na declaração de conformidade.

RO - Indicații de siguranță pentru mijloacele de producție electrice pentru zonele periclitate de explozie. Dacă nu puteți citi aceste instrucțiuni, atunci puteți comanda la noi instrucțiunile traduse în limba țării dumneavoastră.
Declarația UE de conformitate
Producătorul Endress+Hauser declară prin declarația de conformitate alăturată și prin aplicarea semnului CE că acest produs corespunde directivelor europene aplicabile. Directivele, normele aplicate și documentele sunt menționate în declarația de conformitate.

SK - Bezpečnostné pokyny pre elektrické zariadenie prevádzkované v priestoroch s nebezpečenstvom výbuchu. Ak nemáte možnosť prečítať si tento návod, môžete si u nás objednať návod preložený do svojho jazyka.
EÚ vyhlásenie o zhode
Spoločnosť Endress+Hauser vyhlasuje prostredníctvom tohto vyhlásenia o konformite a použitím značky CE, že tento výrobok vyhovuje príslušným európskym smerniciam. Zmieňované smernice, normy a dokumenty sú uvedené vo Vyhlásení o konformite.

SL - Varnostni napotki glede električne opreme, namenjene za uporabo v eksplozivnih območjih. Če teh navodil ne morete razumeti, lahko pri nas naročite prevod v vaš jezik.
Izjava EU o skladnosti
Proizvajalec Endress+Hauser s to izjavo o skladnosti in navedbo oznake CE izjavlja, da je ta izdelek skladen s predpisanimi evropskimi smernicami. Upoštevane smernice, standardi in dokumenti so navedeni v izjavi o skladnosti.

SV - Säkerhetsföreskrifter för elektrisk utrustning certifierad för användning i explosionsfarliga områden. Om du inte förstår denna manual, kan en översatt kopia på ditt eget språk beställas från oss.
EU-försäkran om överensstämmelse
Endress+Hauser försäkrar med vidstående försäkran om överensstämmelse och med CE-märkningen att denna produkt överensstämmer med de tillämpbara europeiska riktlinjerna. De tillämpade riktlinjerna, normerna och dokumenten anges i försäkran om överensstämmelse.

EU-Konformitätserklärung
EU-Declaration of Conformity
Déclaration UE de Conformité

Endress+Hauser
People for Process Automation

CE

Company **Endress+Hauser GmbH+Co. KG, Hauptstraße 1, 79689 Maulburg**
erklärt als Hersteller in alleiniger Verantwortung, dass das Produkt
declares as manufacturer under sole responsibility, that the product
déclare sous sa seule responsabilité en qualité de fabricant que le produit

Product **CERABAR S**
PMP71, PMP75, PMC71

Regulations den folgenden Europäischen Richtlinien entspricht:
conforms to following European Directives:
est conforme aux prescriptions des Directives Européennes suivantes :

ATEX	2014/34/EU (L96/309)
EMC	2014/30/EU (L96/79)
RoHS	2011/65/EU (L174/88)

Standards angewandte harmonisierte Normen oder normative Dokumente:
applied harmonized standards or normative documents:
normes harmonisées ou documents normatifs appliqués:

EN 50581	(2012)	EN 60079-0+A11(2013)	(2012)	EN 60079-31	(2014)
EN 61010-1	(2010)	EN 60079-11	(2012)		
EN 61326-1	(2013)	EN 60079-26	(2015)		
EN 61326-2-3	(2013)				
EN 61326-2-5	(2013)				

Certification EG-Baumusterprüfbescheinigung Nr. KEMA 03 ATEX 1561
EC-Type Examination Certificate No.
Numéro de l'attestation d'examen CE de typ

Ausgestellt von/issued by/délivré par DEKRA Certification B.V. (0344)
Qualitätssicherung TÜV Nord CERT (GmbH) (0044)
Quality assurance
Système d'assurance qualité

Maulburg, 25.07.2017
Endress + Hauser GmbH + Co. KG

i.V. Dr. Arno Götz
Abteilungsleiter Produktsicherheit
Department Manager Product Safety
Responsable de certification

EG 03 033 -g

Cerabar S PMC71, PMP71, PMP75

4-20 mA HART, PROFIBUS PA, FOUNDATION Fieldbus

Inhaltsverzeichnis

Zugehörige Dokumentation 6
Ergänzende Dokumentation 6
Herstellerbescheinigungen 6
Herstelleradresse 6
Weitere Normen 6
Erweiterter Bestellcode 6
Sicherheitshinweise: Allgemein 9
Sicherheitshinweise: Besondere Bedingungen 9
Sicherheitshinweise: Installation 10
Sicherheitshinweise: Zone 0 10
Temperaturtabellen 11
Anschlusswerte 11

Zugehörige Dokumentation

Dieses Dokument ist fester Bestandteil der folgenden Betriebsanleitungen:

HART
- BA00271P/00
- BA00274P/00

PROFIBUS PA
- BA00295P/00
- BA00296P/00

FOUNDATION Fieldbus
- BA00302P/00
- BA00303P/00

Ergänzende Dokumentation

Explosionsschutz-Broschüre: CP00021Z/11

Die Explosionsschutz-Broschüre ist verfügbar:
- Im Download-Bereich der Endress+Hauser Internetseite: www.endress.com -> Downloads -> Suchbereich: Dokumentation -> Dokumentation: Broschüren und Kataloge -> Textsuche: CP00021Z
- Bei Geräten mit Dokumentation auf CD: Auf der CD

Herstellerbescheinigungen

EU-Konformitätserklärung

→ 🗎 3

EU-Baumusterprüfbescheinigung

Zertifikatsnummer:
KEMA 03 ATEX 1561

Liste der angewendeten Standards: Siehe EU-Konformitätserklärung.

IEC-Konformitätserklärung

Zertifikatsnummer:
IECEx KEM06.0011

Das Anbringen der Zertifikatsnummer bescheinigt die Konformität mit den folgenden Normen (abhängig von der Geräteausführung):
- IEC 60079-0 : 2011
- IEC 60079-11 : 2011
- IEC 60079-26 : 2014

Herstelleradresse

Endress+Hauser GmbH+Co. KG
Hauptstraße 1
79689 Maulburg, Deutschland

Adresse des Fertigungswerks: Siehe Typenschild.

Weitere Normen

Für die fachgerechte Installation sind unter anderem die folgende Normen in ihrer aktuellen Version zu beachten:
- IEC/EN 60079-14: "Explosionsgefährdete Bereiche - Teil 14: Projektierung, Auswahl und Errichtung elektrischer Anlagen"
- EN 1127-1: "Explosionsfähige Atmosphären - Explosionsschutz - Teil 1: Grundlagen und Methodik"

Erweiterter Bestellcode

Der erweiterte Bestellcode (Extended order code) wird auf dem Typenschild dargestellt, das auf dem Gerät gut sichtbar angebracht ist. Weitere Informationen zum Typenschild: Siehe Betriebsanleitung.

Aufbau des Erweiterten Bestellcodes

PMC71, PMP7x	–	**********	+	A*B*C*D*E*F*G*..
(Gerätetyp)		*(Grundspezifikationen)*		*(Optionale Spezifikationen)*

* = Platzhalter
An diesen Positionen wird eine Option dargestellt (Zahl oder Buchstabe), die aus der Spezifikation gewählt wurde.

Grundspezifikationen

In den Grundspezifikationen werden diejenigen Merkmale festgelegt, die für das Gerät zwingend notwendig sind (Muss-Merkmale). Die Anzahl der Positionen ist abhängig von der Anzahl der verfügbaren Merkmale. Die gewählte Option eines Merkmals kann dabei aus mehreren Positionen bestehen.

Optionale Spezifikationen

In den optionalen Spezifikationen werden zusätzliche Merkmale für das Gerät festgelegt (Kann-Merkmale). Die Anzahl der Positionen ist abhängig von der Anzahl der verfügbaren Merkmale. Um die Merkmale zu identifizieren, sind sie zweistellig aufgebaut (z.B. JA). Die erste Position (Kennung) steht für eine Merkmalsgruppe und besteht aus einer Zahl oder einem Buchstaben (z.B. J = Test, Zeugnis). An zweiter Position wird der Wert dargestellt, der für das Merkmal innerhalb der Gruppe steht (z.B. A = 3.1 Material (mediumberührt), Abnahmeprüfzeugnis).

Nähere Informationen zum Gerät den folgenden Tabellen entnehmen. Sie beschreiben die einzelnen Ex-relevanten Positionen und Kennungen innerhalb des erweiterten Bestellcodes.

Erweiterter Bestellcode: Cerabar S

Die folgenden Angaben bilden einen Auszug aus der Produktstruktur ab und dienen der Zuordnung:
- Dieser Dokumentation zum Gerät (anhand des erweiterten Bestellcodes auf dem Typenschild).
- Der im Dokument angegebenen Geräteoptionen.

Gerätetyp

PMC71

Grundspezifikationen

Position 1 (Zulassung)		
Gewählte Option		**Beschreibung**
PMC71	1	ATEX II 1/2 G Ex ia IIC T6...T4/T3 Ga/Gb
	6 [1)]	ATEX II 1/2 G Ex ia IIC T6...T4/T3 Ga/Gb, WHG
	I	IECEx Ex ia IIC T6...T4/T3 Ga/Gb

1) Nur in Zusammenhang mit Position 2 (Ausgang, Bedienung) = A, B, C, D, E, F

Position 2 (Ausgang, Bedienung)		
Gewählte Option		**Beschreibung**
PMC71	A, B, C	4-20 mA HART
	D, E, F	4-20 mA HART, L_i = 0
	M, N, O	PROFIBUS PA
	P, Q, R	FOUNDATION Fieldbus

Position 10 (Zusatzausstattung 1)		
Gewählte Option		**Beschreibung**
PMC71	M	Überspannungsschutz
	T	Hochtemperatur Ausführung max 150°C/300°F

Position 11 (Zusatzausstattung 2)		
Gewählte Option		**Beschreibung**
PMC71	G	Separatgehäuse, Kabellänge siehe Zusatzspez. + Gehäuse Montagehalter, Wand/Rohr, 316L
	M	Überspannungsschutz
	T	Hochtemperatur Ausführung max 150°C/300°F

Optionale Spezifikationen

Keine Ex-relevanten Optionen vorhanden.

Die folgenden Angaben bilden einen Auszug aus der Produktstruktur ab und dienen der Zuordnung:
- Dieser Dokumentation zum Gerät (anhand des erweiterten Bestellcodes auf dem Typenschild).
- Der im Dokument angegebenen Geräteoptionen.

Gerätetyp

PMP71, PMP75

Grundspezifikationen

Position 1 (Zulassung)		
Gewählte Option		**Beschreibung**
PMP7x	1	ATEX II 1/2 G Ex ia IIC T6...T4 Ga/Gb
	6 [1)]	ATEX II 1/2 G Ex ia IIC T6...T4 Ga/Gb, WHG
	I	IECEx Ex ia IIC T6...T4 Ga/Gb

1) Nur in Zusammenhang mit Position 2 (Ausgang, Bedienung) = A, B, C, D, E, F

Position 2 (Ausgang, Bedienung)		
Gewählte Option		**Beschreibung**
PMP7x	A, B, C	4-20 mA HART
	D, E, F	4-20 mA HART, $L_i = 0$
	M, N, O	PROFIBUS PA
	P, Q, R	FOUNDATION Fieldbus

Position 11 (Zusatzausstattung 1)		
Gewählte Option		**Beschreibung**
PMP7x	M	Überspannungsschutz

Position 12 (Zusatzausstattung 2)		
Gewählte Option		**Beschreibung**
PMP7x	G	Separatgehäuse, Kabellänge siehe Zusatzspez. + Gehäuse Montagehalter, Wand/Rohr, 316L
	M	Überspannungsschutz

Optionale Spezifikationen

Kennung Jx (Test, Zeugnis)		
Gewählte Option		**Beschreibung**
PMP7x	JN [1)]	Transmitter für Umgebungstemperatur −50 °C/-58 °F

1) Nur in Zusammenhang mit Position 1 (Zulassung) = 1, I

Sicherheitshinweise: Allgemein

- Installations- und Sicherheitshinweise der Betriebsanleitung beachten.
- Das Personal muss für Montage, elektrische Installation, Inbetriebnahme und Wartung des Geräts folgende Bedingungen erfüllen:
  - Verfügt über Qualifikation, die seiner Funktion und Tätigkeit entspricht
  - Ist ausgebildet im Explosionsschutz
  - Ist vertraut mit den nationalen Vorschriften
- Gerät gemäß Herstellerangaben und nationaler Vorschriften installieren.
- Gerät nur für Messstoffe einsetzen, gegen die die prozessberührenden Materialien hinreichend beständig sind.
- Elektrostatische Aufladung vermeiden:
  - Von Kunststoffflächen (z.B. Gehäuse, Sensorelement, Sonderlackierung, angehängte Zusatzschilder, ..)
  - Von isolierten Kapazitäten (z.B. isolierte metallische Schilder)

Sicherheitshinweise: Besondere Bedingungen

- Bei Prozessanschlüssen aus Kunststoff oder bei Kunststoffbeschichtungen: Elektrostatische Aufladung der Kunststoffflächen vermeiden.
- Bei Flanschen und Plattierungen aus Titan oder Zirkonium: Reib- und Schlagfunken vermeiden.
- Bei zusätzlicher oder alternativer Sonderlackierung des Gehäuses oder anderer metallener Oberflächen:
  - Gefahr von elektrostatischer Auf- und Entladung beachten.
  - Oberflächen nicht trocken reiben.

Sicherheitshinweise: Installation

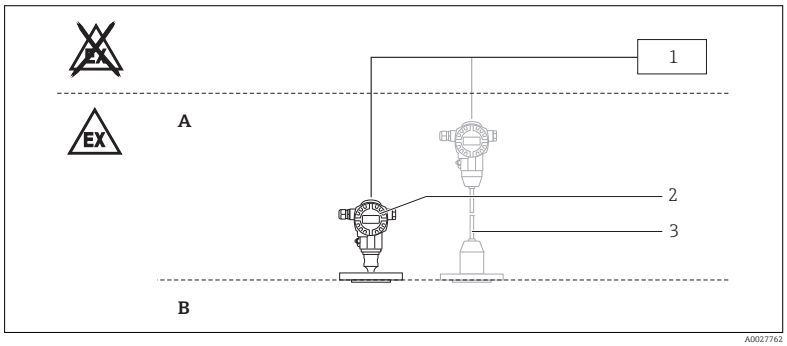

A Zone 1, Elektronik
B Zone 0, Prozess
1 Bescheinigtes zugehöriges Betriebsmittel
2 PMC71, PMP71, PMP75
3 Option: Separatgehäuse

Nach einer Gehäuse-Ausrichtung (Verdrehen): Arretierschraube wieder fest anziehen.

Eigensicherheit

- Der eigensichere Eingangsstromkreis des Geräts ist erdfrei. Seine Spannungsfestigkeit von min. 500 V_{eff} ist gegen Erde ausgeführt.
- Beim Zusammenschalten des Geräts mit bescheinigten eigensicheren Ex ib-Stromkreisen mit Explosionsgruppe IIC oder IIB: Zündschutzart ändert sich in Ex ib IIC oder Ex ib IIB. Beim Anschluss eines eigensicheren Ex ib-Stromkreises: Sensor nicht in Zone 0 einsetzen.

Überspannungsschutz

Gerätetyp PMC71, Grundspezifikation, Position 10 + 11 (Zusatzausstattung 1 + 2) = M
Gerätetyp PMP71, PMP75, Grundspezifikation, Position 11 + 12 (Zusatzausstattung 1 + 2) = M
Der eigensichere Eingangsstromkreis des Geräts ist erdfrei. Seine Spannungsfestigkeit von min. 290 V_{eff} ist gegen Erde ausgeführt.

Sicherheitshinweise: Zone 0

- Bei explosionsfähigen Dampf-Luft-Gemischen: Gerät nur unter atmosphärischen Bedingungen betreiben.
  - Temperatur: −20 … +60 °C
  - Druck: 80 … 110 kPa (0,8 … 1,1 bar)
  - Luft mit normalem Sauerstoffgehalt, üblicherweise 21 % (V/V)
- Wenn keine explosionsfähigen Gemische vorliegen oder Zusatzmaßnahmen getroffen sind: Gerät gemäß seiner Herstellerspezifikation auch außerhalb der atmosphärischen Bedingungen betreibbar.
- Zugehörige Geräte mit galvanischer Trennung zwischen eigensicheren und nicht eigensicheren Stromkreisen bevorzugen.

Bei Gerätetyp PMC71 gilt zusätzlich:
Bei Installationen, die gemäß nationaler Vorschriften oder Normen einen Überspannungsschutz benötigen: Gerät unter Verwendung eines Überspannungsschutzes installieren (z.B. HAW56x von Endress+Hauser).

Temperaturtabellen

Zündschutzart	Temperaturklasse	Prozesstemperatur T_p (process)	Umgebungstemperatur T_a (ambient): Gehäuse
ATEX: II 1/2 G Ex ia IIC T6...T4/T3 Ga/Gb	T6	≤ 80 °C	−40 °C ≤ T_a ≤ +40 °C
	T4	≤ 120 °C [1]	−40 °C ≤ T_a ≤ +70 °C
IECEx: Ex ia IIC T6...T4/T3 Ga/Gb	T3	≤ 150 °C [2]	−40 °C ≤ T_a ≤ +70 °C

1) Nur Gerätetyp PMC71, PMP71
2) Nur Gerätetyp PMC71 mit Grundspezifikation, Position 10 + 11 (Zusatzausstattung 1 + 2) = T

Gerätetyp PMC71, PMP71
- Die Prozesstemperaturen beziehen sich auf die Temperatur an der Trennmembran.
- Maximale Umgebungstemperatur am Gehäuse einhalten.

Gerätetyp PMP75
- Je nach Druckmittlertyp sind höhere Temperaturen zulässig.
- Maximale Umgebungstemperatur am Gehäuse einhalten.

Optionale Spezifikation, Kennung Jx (Test, Zeugnis) = JN
Untere Umgebungstemperaturgrenze für den Explosionsschutz ändert sich auf −50 °C.

Anschlusswerte

Grundspezifikation, Position 2 (Ausgang, Bedienung) = A, B, C, D, E, F

Energieversorgung
U_i ≤ 30 V_{DC} I_i ≤ 300 mA P_i ≤ 1 W C_i ≤ 11,8 nF L_i ≤ 225 µH [1] oder L_i = 0 [2]

1) Grundspezifikation, Position 2 (Ausgang, Bedienung) = A, B, C
2) Grundspezifikation, Position 2 (Ausgang, Bedienung) = D, E, F

Grundspezifikation, Position 2 (Ausgang, Bedienung) = M, N, O, P, Q, R

Energieversorgung	
FISCO	Entity
U_i ≤ 17,5 V_{DC} I_i ≤ 500 mA P_i ≤ 5,5 W C_i ≤ 5 nF L_i ≤ 10 µH	U_i ≤ 24 V_{DC} I_i ≤ 250 mA P_i ≤ 1,2 W C_i ≤ 5 nF L_i ≤ 10 µH

Cerabar S PMC71, PMP71, PMP75

4-20 mA HART, PROFIBUS PA, FOUNDATION Fieldbus

Table of contents

Associated documentation 14
Supplementary documentation 14
Manufacturer's certificates 14
Manufacturer address 14
Other standards 14
Extended order code 14
Safety instructions: General 17
Safety instructions: Special conditions 17
Safety instructions: Installation 18
Safety instructions: Zone 0 18
Temperature tables 19
Connection data 19

Associated documentation

This document is an integral part of the following Operating Instructions:

HART
- BA00271P/00
- BA00274P/00

PROFIBUS PA
- BA00295P/00
- BA00296P/00

FOUNDATION Fieldbus
- BA00302P/00
- BA00303P/00

Supplementary documentation

Explosion-protection brochure: CP00021Z/11

The Explosion-protection brochure is available:
- In the download area of the Endress+Hauser website:
  www.endress.com -> Downloads -> Media Type: Documentation -> Documentation Type: Brochures and catalogs -> Text Search: CP00021Z
- On the CD for devices with CD-based documentation

Manufacturer's certificates

EU Declaration of Conformity

→ 🗎 3

EU type-examination certificate

Certificate number:
KEMA 03 ATEX 1561

List of applied standards: See EU Declaration of Conformity.

IEC Declaration of Conformity

Certificate number:
IECEx KEM06.0011

Affixing the certificate number certifies conformity with the following standards (depending on the device version):
- IEC 60079-0 : 2011
- IEC 60079-11 : 2011
- IEC 60079-26 : 2014

Manufacturer address

Endress+Hauser GmbH+Co. KG
Hauptstraße 1
79689 Maulburg, Germany

Address of the manufacturing plant: See nameplate.

Other standards

Among other things, the following standards shall be observed in their current version for proper installation:
- IEC/EN 60079-14: "Explosive atmospheres - Part 14: Electrical installations design, selection and erection"
- EN 1127-1: "Explosive atmospheres - Explosion prevention and protection - Part 1: Basic concepts and methodology"

Extended order code

The extended order code is indicated on the nameplate, which is affixed to the device in such a way that it is clearly visible. Additional information about the nameplate is provided in the associated Operating Instructions.

Structure of the extended order code

PMC71, PMP7x	–	**********	+	A*B*C*D*E*F*G*..
(Device type)		*(Basic specifications)*		*(Optional specifications)*

* = Placeholder
At this position, an option (number or letter) selected from the specification is displayed instead of the placeholders.

Basic specifications

The features that are absolutely essential for the device (mandatory features) are specified in the basic specifications. The number of positions depends on the number of features available.
The selected option of a feature can consist of several positions.

Optional specifications

The optional specifications describe additional features for the device (optional features).
The number of positions depends on the number of features available. The features have a 2-digit structure to aid identification (e.g. JA). The first digit (ID) stands for the feature group and consists of a number or a letter (e.g. J = Test, Certificate). The second digit constitutes the value that stands for the feature within the group (e.g. A = 3.1 material (wetted parts), inspection certificate).

More detailed information about the device is provided in the following tables. These tables describe the individual positions and IDs in the extended order code which are relevant to hazardous locations.

Extended order code: Cerabar S

The following specifications reproduce an extract from the product structure and are used to assign:
- This documentation to the device (using the extended order code on the nameplate).
- The device options cited in the document.

Device type

PMC71

Basic specifications

Position 1 (Approval)		
Selected option		**Description**
PMC71	1	ATEX II 1/2 G Ex ia IIC T6...T4/T3 Ga/Gb
	6 [1)]	ATEX II 1/2 G Ex ia IIC T6...T4/T3 Ga/Gb, WHG
	I	IECEx Ex ia IIC T6...T4/T3 Ga/Gb

1) Only in connection with Position 2 (Output, Operating) = A, B, C, D, E, F

Position 2 (Output, Operating)		
Selected option		**Description**
PMC71	A, B, C	4-20 mA HART
	D, E, F	4-20 mA HART, L_i = 0
	M, N, O	PROFIBUS PA
	P, Q, R	FOUNDATION Fieldbus

Position 10 (Additional Option 1)		
Selected option		**Description**
PMC71	M	Overvoltage protection
	T	High temperature version max 150°C/300°F

Position 11 (Additional Option 2)		
Selected option		**Description**
PMC71	G	Separate housing, cable length see additional spec. + housing mounting bracket, wall/pipe, 316L
	M	Overvoltage protection
	T	High temperature version max 150°C/300°F

Optional specifications

No options specific to hazardous locations are available.

The following specifications reproduce an extract from the product structure and are used to assign:
- This documentation to the device (using the extended order code on the nameplate).
- The device options cited in the document.

Device type

PMP71, PMP75

Basic specifications

Position 1 (Approval)		
Selected option		**Description**
PMP7x	1	ATEX II 1/2 G Ex ia IIC T6...T4 Ga/Gb
	6 [1)]	ATEX II 1/2 G Ex ia IIC T6...T4 Ga/Gb, WHG
	I	IECEx Ex ia IIC T6...T4 Ga/Gb

1) Only in connection with Position 2 (Output, Operating) = A, B, C, D, E, F

Position 2 (Output, Operating)		
Selected option		**Description**
PMP7x	A, B, C	4-20 mA HART
	D, E, F	4-20 mA HART, L_1 = 0
	M, N, O	PROFIBUS PA
	P, Q, R	FOUNDATION Fieldbus

Position 11 (Additional Option 1)		
Selected option		**Description**
PMP7x	M	Overvoltage protection

Position 12 (Additional Option 2)		
Selected option		**Description**
PMP7x	G	Separate housing, cable length see additional spec. + housing mounting bracket, wall/pipe, 316L
	M	Overvoltage protection

Optional specifications

ID Jx (Test, Certificate)		
Selected option		**Description**
PMP7x	JN [1)]	Ambient temperature transmitter −50 °C/-58 °F

1) Only in connection with Position 1 (Approval) = 1, I

Safety instructions: General

- Comply with the installation and safety instructions in the Operating Instructions.
- Staff must meet the following conditions for mounting, electrical installation, commissioning and maintenance of the device:
  - Be suitably qualified for their role and the tasks they perform
  - Be trained in explosion protection
  - Be familiar with national regulations
- Install the device according to the manufacturer's instructions and national regulations.
- Only use the device in media to which the wetted materials have sufficient durability.
- Avoid electrostatic charging:
  - Of plastic surfaces (e.g. housing, sensor element, special varnishing, attached additional plates, ..)
  - Of isolated capacities (e.g. isolated metallic plates)

Safety instructions: Special conditions

- In the case of process connections made of polymeric material or with polymeric coatings, avoid electrostatic charging of the plastic surfaces.
- For light metal flanges or flange faces (e.g. titanium, zirconium), avoid sparks caused by impact and friction.
- In the event of additional or alternative special varnishing on the housing or other metal parts:
  - Observe the danger of electrostatic charging and discharge.
  - Do not rub surfaces with a dry cloth.

Safety instructions: Installation

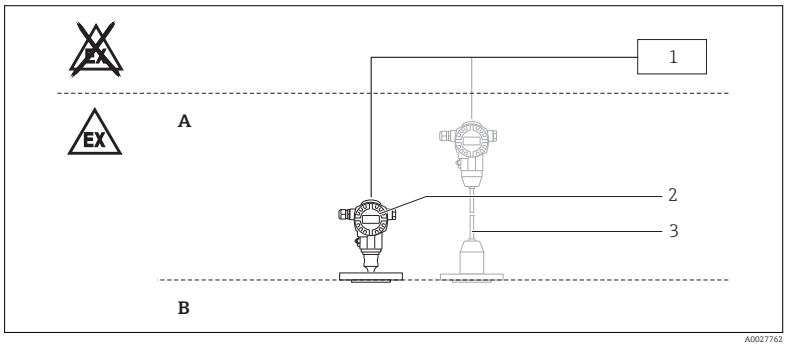

A Zone 1, Electronic
B Zone 0, Process
1 Certified associated apparatus
2 PMC71, PMP71, PMP75
3 Option: Separate housing

After aligning (rotating) the housing, retighten the fixing screw.

Intrinsic safety

- The intrinsically safe input power circuit of the device is isolated from ground. The dielectric strength is at least 500 V_{rms}.
- When the device is connected to certified intrinsically safe circuits of Category Ex ib for Equipment Groups IIC and IIB, the type of protection changes to Ex ib IIC and Ex ib IIB. Do not operate the sensor in Zone 0 if connecting to an intrinsically safe circuit of Category Ex ib.

Overvoltage protection

Device type PMC71, Basic specification, Position 10 + 11 (Additional Option 1 + 2) = M
Device type PMP71, PMP75, Basic specification, Position 11 + 12 (Additional Option 1 + 2) = M
The intrinsically safe input power circuit of the device is isolated from ground. The dielectric strength is at least 290 V_{rms}.

Safety instructions: Zone 0

- In the event of potentially explosive vapor/air mixtures, only operate the device under atmospheric conditions.
  - Temperature: −20 to +60 °C
  - Pressure: 80 to 110 kPa (0.8 to 1.1 bar)
  - Air with normal oxygen content, usually 21 % (V/V)
- If no potentially explosive mixtures are present, or if additional protective measures have been taken, the device may also be operated under non-atmospheric conditions in accordance with the manufacturer's specifications.
- Associated devices with galvanic isolation between the intrinsically safe and non-intrinsically safe circuits are preferred.

For Device type PMC71, the following also applies:
For installations which require overvoltage protection to comply with national regulations or standards, install the device using overvoltage protection (e.g. HAW56x from Endress+Hauser).

Temperature tables

Type of protection	Temperature class	Process temperature T_p (process)	Ambient temperature T_a (ambient): housing
ATEX: II 1/2 G Ex ia IIC T6...T4/T3 Ga/Gb	T6	≤ 80 °C	−40 °C ≤ T_a ≤ +40 °C
	T4	≤ 120 °C [1]	−40 °C ≤ T_a ≤ +70 °C
IECEx: Ex ia IIC T6...T4/T3 Ga/Gb	T3	≤ 150 °C [2]	−40 °C ≤ T_a ≤ +70 °C

1) Only Device type PMC71, PMP71
2) Only Device type PMC71 with Basic specification, Position 10 + 11 (Additional Option 1 + 2) = T

Device type PMC71, PMP71
- The process temperatures refer to the temperature at the separation membrane.
- Do not exceed the max. ambient temperature at the housing.

Device type PMP75
- Higher temperatures are permitted depending on the type of diaphragm seal.
- Do not exceed the max. ambient temperature at the housing.

Optional specification, ID Jx (Test, Certificate) = JN
Lower limit of the ambient temperature for explosion protection changes to −50 °C.

Connection data

Basic specification, Position 2 (Output, Operating) = A, B, C, D, E, F

Power supply
U_i ≤ 30 V_{DC} I_i ≤ 300 mA P_i ≤ 1 W C_i ≤ 11.8 nF L_i ≤ 225 µH [1] or L_i = 0 [2]

1) Basic specification, Position 2 (Output, Operating) = A, B, C
2) Basic specification, Position 2 (Output, Operating) = D, E, F

Basic specification, Position 2 (Output, Operating) = M, N, O, P, Q, R

Power supply	
FISCO	Entity
U_i ≤ 17.5 V_{DC} I_i ≤ 500 mA P_i ≤ 5.5 W C_i ≤ 5 nF L_i ≤ 10 µH	U_i ≤ 24 V_{DC} I_i ≤ 250 mA P_i ≤ 1.2 W C_i ≤ 5 nF L_i ≤ 10 µH

Cerabar S PMC71, PMP71, PMP75

4-20 mA HART, PROFIBUS PA, FOUNDATION Fieldbus

Sommaire

Documentation correspondante 22
Documentation complémentaire 22
Certificats constructeur 22
Adresse du fabricant 22
Autres normes 22
Référence de commande étendue 22
Conseils de sécurité : Généralités 25
Conseils de sécurité : Conditions particulières 25
Conseils de sécurité : Installation 26
Conseils de sécurité : Zone 0 26
Tableaux des températures 27
Valeurs de raccordement 27

Documentation correspondante

Le présent document fait partie intégrante des manuels de mise en service suivants :

HART
- BA00271P/00
- BA00274P/00

PROFIBUS PA
- BA00295P/00
- BA00296P/00

FOUNDATION Fieldbus
- BA00302P/00
- BA00303P/00

Documentation complémentaire

Brochure sur la protection contre les explosions : CP00021Z/11

La brochure sur la protection contre les explosions est disponible :
- Dans la zone de téléchargement sur le site Internet Endress+Hauser : www.endress.com -> Téléchargements -> Type de média : Documentation -> Type de documentation : Brochures et catalogues -> Recherche texte : CP00021Z
- Pour les appareils avec documentation sur CD : Sur le CD

Certificats constructeur

Déclaration UE de conformité

→ 🗎 3

Attestation d'examen UE de type

Numéro de certificat :
KEMA 03 ATEX 1561

Liste des normes appliquées : Voir la Déclaration UE de conformité.

Déclaration CEI de conformité

Numéro de certificat :
IECEx KEM06.0011

En apposant le numéro de certificat, on certifie la conformité aux normes suivantes (en fonction de l'exécution de l'appareil) :
- IEC 60079-0 : 2011
- IEC 60079-11 : 2011
- IEC 60079-26 : 2014

Adresse du fabricant

Endress+Hauser GmbH+Co. KG
Hauptstraße 1
79689 Maulburg, Allemagne

Adresse du site de production : Voir plaque signalétique.

Autres normes

Pour une installation conforme, il convient, entre autres, de respecter les normes suivantes dans leur version actuelle :
- IEC/EN 60079-14 : "Atmosphères explosives - Partie 14 : Conception, sélection et construction des installations électriques"
- EN 1127-1 : "Atmosphères explosives - Prévention de l'explosion et protection contre l'explosion - Partie 1 : Notions fondamentales et méthodologie"

Référence de commande étendue

La référence de commande étendue (Extended order code) est indiquée sur la plaque signalétique qui est apposée de façon bien visible sur l'appareil. Pour plus d'informations sur la plaque signalétique : Voir manuel de mise en service correspondant.

Structure de la référence de commande étendue

PMC71, PMP7x	–	**********	+	A*B*C*D*E*F*G*..
(Type d'appareil)		*(Spécifications de base)*		*(Spécifications optionnelles)*

* = Caractère de remplacement
Position pour une option sélectionnée dans la spécification (chiffre ou lettre).

Spécifications de base

Les caractéristiques indispensables pour l'appareil sont définies dans les spécifications de base. Le nombre de positions dépend du nombre de caractéristiques disponibles, l'option choisie pour une caractéristique pouvant être composée de plusieurs positions.

Spécifications optionnelles

Les caractéristiques additionnelles de l'appareil sont décrites dans les spécifications optionnelles. Le nombre de positions dépend du nombre de caractéristiques disponibles. Afin d'identifier les caractéristiques, elles sont composées de deux caractères (par ex. JA). La première position (identifiant), qui correspond à un groupe de caractéristiques (par ex. J = Test, certificat) se compose d'un chiffre ou d'une lettre. La deuxième position représente la valeur qui correspond à la caractéristique au sein du groupe (par ex. A = Matériau 3.1 (en contact avec le produit), certificat de réception).

Pour plus d'informations sur l'appareil, voir les tableaux suivants. Chaque caractère Ex ou chaque identifiant de la référence de commande étendue est décrit ici.

Référence de commande étendue : Cerabar S

Les indications suivantes représentent un extrait de la structure du produit et permettent l'affectation :
- De cette documentation à l'appareil (à l'aide de la référence de commande étendue sur la plaque signalétique).
- Des options d'appareil indiquées dans le document.

Type d'appareil

PMC71

Spécifications de base

Position 1 (Agrément)		
Option sélectionnée		**Description**
PMC71	1	ATEX II 1/2 G Ex ia IIC T6...T4/T3 Ga/Gb
	6 [1)]	ATEX II 1/2 G Ex ia IIC T6...T4/T3 Ga/Gb, WHG
	I	IECEx Ex ia IIC T6...T4/T3 Ga/Gb

1) Seulement en combinaison avec Position 2 (Sortie, programmation) = A, B, C, D, E, F

Position 2 (Sortie, programmation)		
Option sélectionnée		**Description**
PMC71	A, B, C	4-20 mA HART
	D, E, F	4-20 mA HART, L_I = 0
	M, N, O	PROFIBUS PA
	P, Q, R	FOUNDATION Fieldbus

Position 10 (Option supplémentaire 1)		
Option sélectionnée		**Description**
PMC71	M	Parafoudre
	T	Version de température max 150°C/300°F

Position 11 (Option supplémentaire 2)		
Option sélectionnée		**Description**
PMC71	G	Boîtier séparé, longueur de câble voir spécif. complément. + boîtier étrier de montage, mural/tube, 316L
	M	Parafoudre
	T	Version de température max 150°C/300°F

Spécifications optionnelles

Aucune option Ex disponible.

Les indications suivantes représentent un extrait de la structure du produit et permettent l'affectation :
- De cette documentation à l'appareil (à l'aide de la référence de commande étendue sur la plaque signalétique).
- Des options d'appareil indiquées dans le document.

Type d'appareil

PMP71, PMP75

Spécifications de base

Position 1 (Agrément)		
Option sélectionnée		**Description**
PMP7x	1	ATEX II 1/2 G Ex ia IIC T6...T4 Ga/Gb
	6 [1)]	ATEX II 1/2 G Ex ia IIC T6...T4 Ga/Gb, WHG
	I	IECEx Ex ia IIC T6...T4 Ga/Gb

1) Seulement en combinaison avec Position 2 (Sortie, programmation) = A, B, C, D, E, F

Position 2 (Sortie, programmation)		
Option sélectionnée		**Description**
PMP7x	A, B, C	4-20 mA HART
	D, E, F	4-20 mA HART, L_i = 0
	M, N, O	PROFIBUS PA
	P, Q, R	FOUNDATION Fieldbus

Position 11 (Option supplémentaire 1)		
Option sélectionnée		**Description**
PMP7x	M	Parafoudre

Position 12 (Option supplémentaire 2)		
Option sélectionnée		**Description**
PMP7x	G	Boîtier séparé, longueur de câble voir spécif. complément. + boîtier étrier de montage, mural/tube, 316L
	M	Parafoudre

Spécifications optionnelles

Identifiant Jx (Test, certificat)		
Option sélectionnée		**Description**
PMP7x	JN [1)]	Transmetteur de température ambiante −50 °C/-58 °F

1) Seulement en combinaison avec Position 1 (Agrément) = 1, I

Conseils de sécurité : Généralités

- Tenir compte des conseils d'installation et de sécurité du manuel de mise en service.
- Le personnel réalisant le montage, l'installation électrique, la mise en service et la maintenance de l'appareil doit remplir les conditions suivantes :
  - Disposer de la qualification correspondant à ses fonctions et à ses activités
  - Etre formé sur la protection contre les explosions
  - Etre informé sur les directives nationales en vigueur
- Installer l'appareil d'après les instructions du fabricant et les directives nationales en vigueur.
- N'utiliser l'appareil que dans des produits contre lesquels les matériaux en contact sont suffisamment résistants.
- Eviter le chargement électrostatique :
  - De surfaces synthétiques (par ex. boîtier, élément sensible, vernis spécial, plaques additionnelles attachées...)
  - De capacités isolées (par ex. plaques métalliques isolées)

Conseils de sécurité : Conditions particulières

- En cas de raccords process en matière synthétique ou avec revêtements synthétiques : Eviter le chargement électrostatique des surfaces synthétiques.
- Dans le cas de brides et placages en titane ou zirconium : Eviter les étincelles dues aux frottements ou aux chocs.
- En cas de vernis spécial supplémentaire ou alternatif du boîtier ou d'autres surfaces métalliques :
  - Prendre en compte un risque de charge ou de décharge électrostatique.
  - Ne pas frotter les surfaces avec un chiffon sec.

Conseils de sécurité : Installation

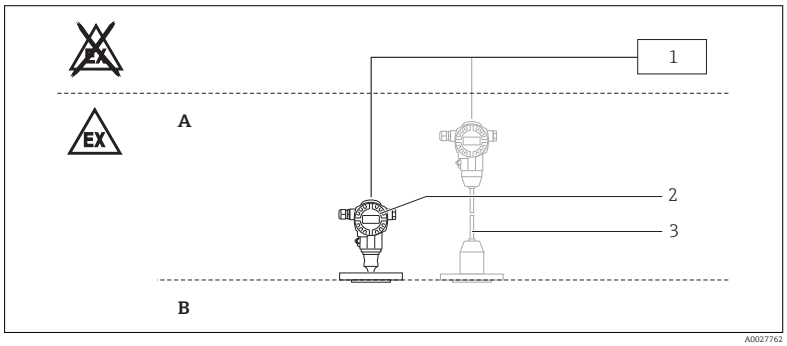

A Zone 1, Electronique
B Zone 0, Process
1 Matériel électrique associé certifié
2 PMC71, PMP71, PMP75
3 Option : Boîtier séparé

Après l'orientation du boîtier (rotation) : Serrer fortement les vis de verrouillage.

Sécurité intrinsèque

- Le circuit d'entrée à sécurité intrinsèque de l'appareil est isolé de la terre. Sa tenue diélectrique est de min. 500 V_{eff} par rapport à la terre.
- En cas de connexion de l'appareil à des circuits à sécurité intrinsèque de la catégorie Ex ib avec le groupe d'explosion IIC ou IIB : Le mode de protection se modifie comme suit : Ex ib IIC ou Ex ib IIB. Lors du raccordement d'un circuit à sécurité intrinsèque Ex ib : Ne pas utiliser le capteur en zone 0.

Parafoudre

Type d'appareil PMC71, Spécifications de base, Position 10 + 11 (Option supplémentaire 1 + 2) = M
Type d'appareil PMP71, PMP75, Spécifications de base, Position 11 + 12 (Option supplémentaire 1 + 2) = M
Le circuit d'entrée à sécurité intrinsèque de l'appareil est isolé de la terre. Sa tenue diélectrique est de min. 290 V_{eff} par rapport à la terre.

Conseils de sécurité : Zone 0

- En cas de mélanges explosifs vapeur-air : N'utiliser l'appareil que sous des conditions atmosphériques.
  - Température : −20 … +60 °C
  - Pression : 80 … 110 kPa (0,8 … 1,1 bar)
  - Air avec concentration normale en oxygène, généralement 21 % (V/V)
- En l'absence de mélange explosif ou si des mesures complémentaires ont été prises : Appareil utilisable selon les spécifications du fabricant même en dehors des conditions atmosphériques.
- Préférer les appareils associés avec séparation galvanique entre les circuits avec et sans sécurité intrinsèque.

Pour Type d'appareil PMC71 on a aussi :
Pour les installations qui, conformément à des directives ou normes nationales nécessitent un parafoudre : Installer l'appareil avec un tel dispositif (par ex. HAW56x d'Endress+Hauser).

Tableaux des températures

Mode de protection	Classe de température	Température de process T_p (process)	Température ambiante T_a (ambient) : Boîtier
ATEX : II 1/2 G Ex ia IIC T6...T4/T3 Ga/Gb	T6	≤ 80 °C	−40 °C ≤ T_a ≤ +40 °C
	T4	≤ 120 °C [1]	−40 °C ≤ T_a ≤ +70 °C
IECEx : Ex ia IIC T6...T4/T3 Ga/Gb	T3	≤ 150 °C [2]	−40 °C ≤ T_a ≤ +70 °C

1) Seulement Type d'appareil PMC71, PMP71
2) Seulement Type d'appareil PMC71 avec Spécifications de base, Position 10 + 11 (Option supplémentaire 1 + 2) = T

Type d'appareil PMC71, PMP71
- Les températures de process se réfèrent à la température à la membrane de séparation.
- Ne pas dépasser la température ambiante max. au boîtier.

Type d'appareil PMP75
- Températures supérieures sont permises en fonction du type de séparateur.
- Ne pas dépasser la température ambiante max. au boîtier.

Spécifications optionnelles, Identifiant Jx (Test, certificat) = JN
Le seuil de température ambiante inférieur pour la protection contre les explosions passe à −50 °C.

Valeurs de raccordement

Spécifications de base, Position 2 (Sortie, programmation) = A, B, C, D, E, F

Alimentation
U_i ≤ 30 V_{DC} I_i ≤ 300 mA P_i ≤ 1 W C_i ≤ 11,8 nF L_i ≤ 225 µH [1] ou L_i = 0 [2]

1) Spécifications de base, Position 2 (Sortie, programmation) = A, B, C
2) Spécifications de base, Position 2 (Sortie, programmation) = D, E, F

Spécifications de base, Position 2 (Sortie, programmation) = M, N, O, P, Q, R

Alimentation	
FISCO	Entity
U_i ≤ 17,5 V_{DC} I_i ≤ 500 mA P_i ≤ 5,5 W C_i ≤ 5 nF L_i ≤ 10 µH	U_i ≤ 24 V_{DC} I_i ≤ 250 mA P_i ≤ 1,2 W C_i ≤ 5 nF L_i ≤ 10 µH

71383397

www.addresses.endress.com

Endress+Hauser
People for Process Automation

A.10.4 Declaration of Conformity

EU-Konformitätserklärung
EU-Declaration of Conformity
Déclaration UE de Conformité

Endress+Hauser
People for Process Automation

CE

Company	**Endress+Hauser SE+Co. KG, Hauptstraße 1, 79689 Maulburg** erklärt als Hersteller in alleiniger Verantwortung, dass das Produkt declares as manufacturer under sole responsibility, that the product déclare sous sa seule responsabilité en qualité de fabricant que le produit
Product	**DELTABAR S** PMD75, FMD77, FMD78
Regulations	den folgenden Europäischen Richtlinien entspricht: conforms to following European Directives: est conforme aux prescriptions des Directives Européennes suivantes :

ATEX	2014/34/EU (L96/309)
EMC	2014/30/EU (L96/79)
RoHS	2011/65/EU (L174/88)

Standards

angewandte harmonisierte Normen oder normative Dokumente:
applied harmonized standards or normative documents:
normes harmonisées ou documents normatifs appliqués:

EN 50581	(2012)	EN 60079-0	(2012)	EN 60079-26	(2015)
EN 61010-1	(2010)	EN 60079-1	(2014)		
EN 61326-1	(2013)	EN 60079-11	(2012)		
EN 61326-2-3	(2013)	EN 61326-2-5	(2013)		

Die in der zugehörigen EU-Baumusterprüfbescheinigung KEMA 05 ATEX 1009 genannten Normen wurden durch neue Ausgaben ersetzt. Die Änderungen in den neuen Normen betreffen unsere Produkte nicht. Wir erklären für das genannte Produkt auch die Übereinstimmung mit den Anforderungen der neuen Normenausgabe.

The standards associated to the EU-certificate of conformity KEMA 05 ATEX 1009 have been replaced by new editions. The modification in the new standards does not apply to our products. We therefore declare the conformity to the stated product with the requirements of the new issued standards.

Les normes associées au certificat CE de conformité KEMA 05 ATEX 1009 ont été remplacées par de nouvelles éditions.Les modifications dans les nouvelles normes ne s'appliquent pas à nos produits. Nous déclarons donc la conformité du produit cité avec les exigences des nouvelles éditions des normes.

Certification	EG-Baumusterprüfbescheinigung Nr. EC-Type Examination Certificate No. Numéro de l'attestation d'examen CE de typ	KEMA 05 ATEX 1009 DEKRA Certification B.V. (0344)
	Qualitätssicherung/Quality assurance/Système d'assurance qualité	TÜV Nord CERT (GmbH) (0044)

Maulburg, 19.02.2018
Endress + Hauser SE+Co. KG

i.V. Dr. Arno Götz
Abteilungsleiter Produktsicherheit
Department Manager Product Safety
Responsable de certification

EG 05 001 -g

A.10.5 EC type-examination certificate

CERTIFICATE

(1) **EU-Type Examination**

(2) **Equipment or protective systems intended for use in potentially explosive atmospheres - Directive 2014/34/EU**

(3) EU-Type Examination Certificate Number: **KEMA 03ATEX1561** Issue Number: **5**

(4) Product: **Pressure transmitter**
CERABAR-S Types PMP71, PMP75 and PMC71 and
DELTAPILOT-S Type FMB70 and
Differential pressure transmitter
DELTABAR-S Types PMD75, FMD77 and FMD78

(5) Manufacturer: **Endress+Hauser GmbH+Co. KG**

(6) Address: **Hauptstraße 1, 79689 Maulburg, Germany**

(7) This product and any acceptable variation thereto is specified in the schedule to this certificate and the documents therein referred to.

(8) DEKRA Certification B.V., Notified Body number 0344 in accordance with Article 17 of Directive 2014/34/EU of the European Parliament and of the Council, dated 26 February 2014, certifies that this product has been found to comply with the Essential Health and Safety Requirements relating to the design and construction of products intended for use in potentially explosive atmospheres given in Annex II to the Directive.

The examination and test results are recorded in confidential test report number NL/KEM/ExTR06.0005/05.

(9) Compliance with the Essential Health and Safety Requirements has been assured by compliance with:

EN 60079-0 : 2012 + A11 : 2013 **EN 60079-11 : 2012** **EN 60079-26 : 2015** **EN 60079-31 : 2014**

except in respect of those requirements listed at item 18 of the Schedule.

(10) If the sign "X" is placed after the certificate number, it indicates that the product is subject to the Specific Conditions of Use specified in the schedule to this certificate.

(11) This EU-Type Examination Certificate relates only to the design and construction of the specified product. Further requirements of the Directive apply to the manufacturing process and supply of this product. These are not covered by this certificate.

(12) The marking of the product shall include the following:

II 1/2 G	**Ex ia IIC T6 ... T2 Ga/Gb** or
II 2 G	**Ex ia IIC T6 ... T2 Gb** and/or
II 1 D	**Ex ia IIIC T85 °C Da**
II 1/2 D	**Ex ia IIIC T85 °C Da/Db** or
	Ex ta/tb IIIC T85 °C Da/Db or
II 1/3 D	**Ex ta/tc IIIC T85 °C Da/Dc**

Date of certification: 16 February 2017

DEKRA Certification B.V.

R. Schuller
Certification Manager

Page 1/4

© Integral publication of this certificate and adjoining reports is allowed. This Certificate may only be reproduced in its entirety and without any change.

DEKRA Certification B.V. Meander 1051, 6825 MJ Arnhem P.O. Box 5185, 6802 ED Arnhem The Netherlands
T +31 88 96 83000 F +31 88 96 83100 www.dekra-certification.com Registered Arnhem 09085396

(13) **SCHEDULE**

(14) **to EU-Type Examination Certificate KEMA 03ATEX1561** Issue No. **5**

(15) **Description**

Pressure transmitters CERABAR-S Types PMP71, PMP75 and PMC71 and DELTAPILOT-S Type FMB70 and Differential pressure transmitters DELTABAR-S Types PMD75, FMD77 and FMD78 are used in potentially explosive atmospheres for the measurement of level, flow, differential pressure, over- and under pressure.

Depending on the electronics insert the output of the Pressure or Differential Pressure Transmitter is a
4 - 20 mA current output signal with a superimposed HART digital signal, or the transmitter is connected to a Fieldbus system for the supply and the communication.

The several versions of the Pressure Transmitters differ in type of sensor, type of electronics insert, type of enclosure, process connection etc.

Optionally all versions of the Pressure and Differential Pressure Transmitters may be provided with an indicator and/or overvoltage protection.

A certified intrinsically safe device may be connected to the display interface of all versions for service purposes.

Optionally all intrinsically safe versions of the Pressure and Differential Pressure Transmitters may be provided with an extended sensor cable.

The enclosure of the apparatus provides a degree of protection of at least IP66 and IP67 in accordance with EN 60529.

Thermal data

Ambient temperature range -50 ºC to +70 ºC.

Transmitters of equipment protection level Ga/Gb and Gb

The relation between the temperature class, the ambient temperature and the process temperature is given in the following table:

Temperature class	Ambient temperature	Process temperature
T6	≤ 40 °C	≤ 80 °C
T4	≤ 70 °C	≤ 120 °C
T3	≤ 70 °C	≤ 180 °C
T2	≤ 70 °C	≤ 280 °C

The maximum allowed process temperature for the different types of Pressure Transmitters and Differential Pressure Transmitters is listed in the relevant equipment manuals.

Transmitters of equipment protection level Da, Db and Dc

The maximum surface temperature of the enclosure T85 °C is based on the maximum ambient temperature of 70 °C with a dust layer up to 5 mm.

DEKRA

(13) **SCHEDULE**

(14) **to EU-Type Examination Certificate KEMA 03ATEX1561** Issue No. **5**

Electrical data

Equipment in type of protection intrinsic safety "i"

Transmitters with electronics insert 4 - 20 mA HART or 4 - 20 mA HART (SIL version)

Supply and output circuit (Terminals + and – or connector):
in type of protection intrinsic safety Ex ia IIC and Ex ia IIIC, only for connection to a certified intrinsically safe circuit, with the following maximum values:
U_i = 30 V; I_i = 300 mA; P_i = 1 W; L_i = 225 µH; C_i = 11,8 nF (output options A, B and C);
U_i = 30 V; I_i = 300 mA; P_i = 1 W; L_i = negligible; C_i = 11,8 nF (output options D, E and F).

Transmitters with electronics insert Profibus PA or Foundation Fieldbus

Supply and output circuit (terminals 1 and 2):
in type of protection intrinsic safety Ex ia IIC and Ex ia IIIC, only for connection to a certified intrinsically safe Fieldbus system, e.g. according to FISCO, with the following maximum values:
U_i = 17,5 V; I_i = 500 mA; P_i = 5,5 W; L_i = 10 µH; C_i = 5 nF;
or
in type of protection intrinsic safety Ex ia IIC and Ex ia IIIC, only for connection to a certified intrinsically safe circuit, with following maximum values:
U_i = 24 V; I_i = 250 mA; P_i = 1,2 W; L_i = 10 µH; C_i = 5 nF.

Equipment in type of protection dust ignition protection by enclosure "t"

Transmitters with electronics insert 4 - 20 mA HART or 4 - 20 mA HART (SIL version)

Supply and output circuit (Terminals + and – or connector):
U ≤ 45 Vdc

Transmitters with electronics insert Profibus PA or Foundation Fieldbus

Supply and output circuit (Terminals 1 and 2):
U ≤ 32 Vdc

Installation instructions

The instructions provided with the product shall be followed in detail to assure safe operation.

(16) **Report Number**

No. NL/KEM/ExTR06.0005/05.

(17) **Specific conditions of use**

None.

(18) **Essential Health and Safety Requirements**

Covered by the standards listed at item (9).

(13) **SCHEDULE**

(14) **to EU-Type Examination Certificate KEMA 03ATEX1561** Issue No. **5**

(19) **Test documentation**

As listed in Report No. NL/KEM/ExTR06.0005/05.

(20) **Certificate history**

Issue 1	-	202787200	initial certificate
Issue 2	-	210773200	constructional changes
Issue 3	-	211500500	constructional changes and standards
Issue 4	-	215686600	constructional changes and standards upgrade
Issue 5	-	219596300	constructional changes and standards upgrade

Form 227A
Version 1 (2016-04)

A.10.6 Material certificates

SSH GmbH Präzisionsdrehteile

SSH GmbH · Im Mühlegrün 4 · D-77716 Haslach

Firma
Endress + Hauser GmbH & Co. KG
Abt. QS - Wareneingang
Hauptstraße 1

D-79689 Maulburg

DIN EN ISO 9001

Anerkannter Bearbeiter von
Werkstoffen auf der Basis
AD-Merkblatt W0/TRD 100

Haslach, den 27.07.2021/ND

Certificate of restamping
Umstempelbescheinigung

Es wird bescheinigt, dass bei den aufgeführten Teilen die Stempelung vor dem Trennen bzw. vor dem Bearbeiten sachgerecht übertragen wurde.
We confirm, that the following noticed parts the stamp has been transfered correctly before cutting respectively before working.
Die Umstempelung erfolgt mit Zustimmung des TÜV SÜD Industrie Service GmbH.
The stamping transfer is made with the agreement of TÜV SÜD Industrie Service GmbH.

Bestell-Nr.: 101/1018167143 vom 14.07.2021
Order no.:

Stückzahl: 576 Adapter Kompakt MOP G 1/2" Ihre-Art.Nr. 71432773
Piece: n.Zg. 211011329-B

Anforderung: AD-W9
Werkstoff: 1.4404
Material:

Positions-Nr.: 1
Position no.:

ausgewiesen durch Abnahmeprüfzeugnis: DIN EN 10204
Identified by inspection certificate: DIN EN 10204
Nr. 84306946 000010
Ugitech vom 12.05.2021

Ursprungskennzeichnung: 1.4404
Origin stamp: 117006

Neue Kennzeichnung: 1.4404
new stamp: 117006
126M0

SSH 1

Mit freundlichen Grüßen
SSH – GmbH
Präzisionsdrehteile
Johannes Schmalz

Dieses Zeugnis ist ohne Unterschrift gültig.
The certificate is produced with EDP and valid without signature.

Im Mühlegrün 4 · 77716 Haslach · Telefon 07832/9765860 · Telefax 07832/97658699
Sitz der Gesellschaft: Haslach, Wolfach HRB 359 · Geschäftsführer: Sylvester Harter, Johannes Schmalz, Thomas Schmalz
Bankverbindung: Deutsche Bank Haslach (BLZ 664 700 35) Konto-Nr. 1266808

1 734 3 1	2 1 2 4 3 1 3 1	3 Ugitech
4 1 16 4 1 12 13485 2 14 68 2 17 25		7 UGITECH 8 R6

9 143 6	10 26 836	11 1 1 6 2 1	12 843 6 46 1

13
44 4 3 13 38 3
1 1 1 5467

14	15 2125 65	16 117 6	17 41	22
18 36	19	20 38	21 33 4	

23
484 484 2 484 484 15 2 14 68 1 4 3

24

1 272 2 16 11 1 44 4 2 1 1 2 2 1 44 4 47 47 17 316 316 182 182 17 316 316 1 3 17 45 2 15 316 316	2 2 2 16 1 44 4 47 47 2 316 316 182 182 1 316 316 175 15156 3 2 15 316 316

41 131		23 5 2 1	2 12 2 1	25

27
28

CHEMISCHE ZUSAMMENSETZUNG

1 16 5 2 1
3 1 2 13 18 2 5 25 4 1
13 566 1 2 6 11 1 1 16 628 2 48 4 138 3 8 4

31

1

4 11

FESTIGKEITSEIGENSCHAFTEN

Lieferzustand : LÖSUNGSGEGLÜHT IN LINIE TEMPERATUR MIND. 1010°C LUFT 101

102										201	
				2	1		5	4		2 5 187 5	
				2	235	5 7	4	3	5	215	22
	2	1		2 8	364	588	52	54	78	168	22
	2	1		3 4	368	587	52	54	78		
	2	1		3 2	367	586	52	54	7		

301

32 15	12 5 2 21 33 B. POLLET 4 148 5 1 2

1	2	3
734 3 1	1 2 4 3 1 3 1	Ugitech

	2			1	217 233 2 1	217		
	2			1	236 2 4 224	221		

METALLOGRAFISCHE EIGENSCHAFTEN

400

401							
112	4						

490

ZUSATZINFORMATIONEN

700

3651 2 1 8
262 2 15

701

702

1 6 1 13

32	33
15	12 5 2 21 B. POLLET 4 148 5 2 2

734 3 1	1 2 4 3 1 3 1	Ugitech

1 1 12 13485 2 14 68 2 16 4 17 25		UGITECH R6

143 6	26 836	1 1 6 2 1	843 6 46 1

44 4 3 13 38 3
1 1 1 5467

	2125 65	117 6	41	
36		38	33 4	

484 484 2 484 484 15 2 14 68 1 4 3

1 272 2 16 11 1 44 4 2 1 1 2 2 1 44 4 47 47 17 316 316 182 182 17 316 316 1 3 17 45 2 15 316 316	2 2 2 16 1 44 4 47 47 2 316 316 182 182 1 316 316 175 15156 3 2 15 316 316

41 131		23 5 2 1	2 12 2 1	

ANALYSE CHIMIQUE

1 16 5 2 1
3 1 2 13 18 2 5 25 4 1
13 566 1 2 6 11 1 1 16 628 2 48 4 138 3 8 4

1

4 11

CARACTERISTIQUES MECANIQUES

Résultats à l'état de livraison : HYPERTREMPE EN LIGNE TEMPERATURE 1010°C MINI AIR

				2	1		5	4		2 5 187 5	
				2	235	5 7	4	3	5	215	22
	2	1		2 8	364	588	52	54	78	168	22
	2	1		3 4	368	587	52	54	78		
	2	1		3 2	367	586	52	54	7		

15	12 5 2 21 B.POLLET 4 148 5 1 2

1	2	3
734 3 1	1 2 4 3 1 3 1	Ugitech

	2			1	217 233 2 1	217		
	2			1	236 2 4 224	221		

CARACTERISTIQUES METALLOGRAPHIQUES

400

401							
112	4						

490

INFORMATIONS COMPLEMENTAIRES

700

3651 2 1 8
262 2 15

701

702

1 6

32	33
15	12 5 2 21 B.POLLET 4 148 5 2 2

1 734 3 1	2 1 2 4 3 1 3 1	3 Ugitech
4 1 16 4 1 12 13485 2 14 68 2 17 25		7 UGITECH 8 R6

9 143 6	10 26 836	11 1 1 6 2 1	12 843 6 46 1

13
44 4 3 13 38 3 1
1 5467

14	15 2125 65	16 117 6	17 41	22
18 36	19	20 38	21 33 4	

23
484 484 2 484 484 15 2 14 68 1 4 3

24

1 272 2 16 11 1 44 4 2 1 1 2 2 1 44 4 47 47 17 316 316 182 182 17 316 316 1 3 17 45 2 15 316 316	2 2 2 16 1 44 4 47 47 2 316 316 182 182 1 316 316 175 15156 3 2 15 316 316

25

41 131		23 5 2 1	2 12 2 1

27
28

CHEMICAL ANALYSIS

1 16 5 2 1
3 1 2 13 18 2 5 25 4 1
13 566 1 2 6 11 1 1 16 628 2 48 4 138 3 8 4

31

1

4 11

MECHANICAL CHARACTERISTICS

Result as delivered : ON-LINE SOLUTION ANNEALED TEMPERATURE OVER 1010°C AIR 101

102										201	
				2	1		5	4		2 5 187 5	
				2	235	5 7	4	3	5	215	22
	2	1		2 8	364	588	52	54	78	168	22
	2	1		3 4	368	587	52	54	78		
	2	1		3 2	367	586	52	54	7		

301

32 15	12 5 2 21 33 B.POLLET 4 148 5 1 2

1	2	3
734 3 1	1 2 4 3 1 3 1	Ugitech

	2			1	217 233 2 1	217		
	2			1	236 2 4 224	221		

METALLOGRAPHIC CHARACTERISTICS

400

401							
112	4						

490

ADDITIONAL INFORMATION

700

3651 2 1 8
262 2 15

701

702

1 6

32	33
15	12 5 2 21 B. POLLET 4 148 5 2 2

1 734 3 1	2 3 1 1 2 4 3 1	3 Ugitech

4 1 16 4 1 12 13485 2 14 68 2 17 25		7 UGITECH 8 R6

9 143 6	10 26 836	11 1 1 6 2 1	12 843 6 46 1

13
44 4 3 13 38 3
1 1 1 5467

14	15 2125 65	16 117 6	17 41	22
18 36	19	20 38	21 33 4	

23
484 484 2 484 484 15 2 14 68 1 4 3

24

1 272 2 16 11 1 44 4 2 1 1 2 2 1 44 4 47 47 17 316 316 182 182 17 316 316 1 3 17 45 2 15 316 316	2 2 2 16 1 44 4 47 47 2 316 316 182 182 1 316 316 175 15156 3 2 15 316 316

41 131		23 5 2 1	2 12 2 1	25

27
28

ANALISI CHIMICHE

1 16 5 2 1
3 1 2 13 18 2 5 25 4 1
13 566 1 2 6 11 1 1 16 628 2 48 4 138 3 8 4

31

1

4 11

CARATTERISTICHE MECCANICHE

Stato di consegna : IPERTEMPRA IN LINEA TEMPERATURA 1010°C / ARIA 101

102										201	
				2	1		5	4		2 5 187 5	
				2	235	5 7	4	3	5	215	22
	2	1		2 8	364	588	52	54	78	168	22
	2	1		3 4	368	587	52	54	78		
	2	1		3 2	367	586	52	54	7		

301

32 15	12 5 2 21 33 B. POLLET 4 148 5 1 2

1 1 734 3	2 3 1 1 2 4 3 1	3 Ugitech

	2			1	217 233 2 1	217		
	2			1	236 2 4 224	221		

CARATTERISTICHE METALLOGRAFICHE

400

401							
112	4						

499

INFORMAZIONI COMPLEMENTARI

700

3651 2 1 8
262 2 15

701

702

1 6

32 15	33 12 5 2 21 B. POLLET 4 148 5 2 2

1 734 3	2 3 1 1 2 4 3 1	3 Ugitech
4 1 16 4 1 12 13485 2 14 68 2 17 25		7 UGITECH 8 R6

9 143 6	10 26 836	11 1 1 6 2 1	12 843 6 46 1

13
44 4 3 13 38 3
1 1 1 5467

14	15 2125 65	16 117 6	17 41	22
18 36	19	20 38	21 33 4	

23
484 484 2 484 484 15 2 14 68 1 4 3

24

1 272 2 16 11 1 44 4 2 1 1 2 2 1 44 4 47 47 17 316 316 182 182 17 316 316 1 3 17 45 2 15 316 316	2 2 2 16 1 44 4 47 47 2 316 316 182 182 1 316 316 175 15156 3 2 15 316 316

25

41 131		23 5 2 1	2 12 2 1

27
28

ANALISIS QUIMICO

1 16 5 2 1
3 1 2 13 18 2 5 25 4 1
13 566 1 2 6 11 1 1 16 628 2 48 4 138 3 8 4

31

1

4 11

CARACTERÍSTICAS MECANICAS

Estado de entrega : HIPERTEMPLADO EN LINEA TEMPERATURA 1010°C MINI AIRE 101

102 201

				2	1		5	4		2 5 187 5	
				2	235	5 7	4	3	5	215	22
	2	1		2 8	364	588	52	54	78	168	22
	2	1		3 4	368	587	52	54	78		
	2	1		3 2	367	586	52	54	7		

301

32 15	12 5 2 21 B.POLLET 4 148 5 1 2

33

1	2	3
734 3 1	1 2 4 3 1 3 1	Ugitech

	2			1	217 233 2 1	217		
	2			1	236 2 4 224	221		

CARACTERÍSTICAS METALOGRÁFICAS

400

401							
112	4						

490

COMPLEMENTAR LA INFORMACION

700

3651 2 1 8

262 2 15

701

702

1 6

32	33
15	12 5 2 21 B. POLLET 4 148 5 2 2

ACEROS INOXIDABLES OLARRA S.A.
Cm. Larrabarri, Elotxelerri, 1
48180 Loiu, Bizkaia
España
www.olarra.com

Management Systems Certified by LRQA
ISO 9001 / SGI 6000360
ISO 14001 / SGI 1870678

ACEROS INOXIDABLES
OLARRA

HEINE & BEISSWENGER STIFTUNG & CO.
HOEHENSTRASSE, 22
70736 FELLBACH-STUTTGART - ALEMANIA

Trade Mark - Zeichen des Lieferwerkes / Anagrama del suministrador

Works Inspector Stamp - Werkssachverständiger / Sello del Inspector: 3

Certificate type - APZ Nach / Certificado tipo: EN 10204/3.1	Certificate nº - Prüf-Nr / Certificado nº: 406871	Date - Datum - Fecha: 20 - 12 - 2019

Our order Nº / Werks - Nr / Nº de Referencia: 693408	Heat / Schmelze / Colada: 485409	Your order Nº / Bestell - Nr / Pedido Nº: 4500325867

Steel Grade / Werkstoff / Calidad: X-2-CRNIMO-17-12-2 / 1.4404	According to / Entsprechend / Corresponde: EN 10272-2016.

Shape and Size - Gegenstad / Perfil y dimensión	Tolerance - Toleranz / Tolerancia	Bundles / Bunde / Bultos	Bars / Stäbe / Barras	Weight / Gewitcht / Peso
RUND 43,5 mm	k 12 /ISO 286-1 /EN 10060	10		6864 Kg

Requirements - Anforderungen - Exigencias

EN 10088-3 2014.
AD-2000-W2/W10.
ASTM A 484 / A 484M-15.
NACE MR-0175/ISO 15156-3 2015.
NACE MR-0103/ISO 17945-2015.
ASTM A 479 / A 479M-18.
ASME SA 479 / SA 479M-19
ASTM A 182/A 182M-19.
ASME SA 182 / SA 182M-19
Type 316-Type 316L.

N°.410000131-K.
Conformity letter/Zustimmungsschreiben TUV BADEN 28.01.1969
Waiving of Countersign/Gegenzeichnungsverzicht:01.03.1977
PED 2014/68/EU, Annex I, Parag.4.3/DGR 2014/68/EU
Anhang I Absatz 4.3 Certificate/Zertifikat Nr. 348/2008/MUC

Melting process / Erschmelzungsart / Proceso de Fusión	Heat treatment / Wärmebehandlung / Tratamiento térmico
E.A.F. / A.O.D.	1060C 4H/Std WATER/WASSER/AGUA

Solution annealed/Abgeschreckt/Hipertemple-Turned/Drehen/Torneado-

Test results - Ergebnis der Prüfungen - Resultados de los ensayos

Dimension of Specimen / Abmessungen des Probestabes / Medida de las probetas		Rp0,2% N/mm2 MPA	Rp 1% N/mm2 MPA	Rm N/mm2 MPA	A %L 5D	A %L 4D	Z %	Hardness Härte HBw	Impact test / Kerbschlagzaehigkeit / Resiliencia ISO V Jules
RD. 10,00 mm.	Min.	200	235	500	40				100
	Max.			700				215	
Temperature °C 20	Spec. Nº. / Probe Nr. / Pro Nº. 1	331	372	605	48	51	72	170	231/227/225
	2	336	377	609	47	50	71	170	226/222/221

	C	Si	Mn	P	S	Cr	Mo	Ni	N	Co
Min.					0,010	16,50	2,00	10,00		
Max.	0,030	0,75	2,00	0,045	0,020	18,50	2,50	13,00	0,1000	
	0,026	0,40	1,60	0,032	0,013	16,59	2,01	10,11	0,0360	0,18

Visual and dimensional inspection / Besichtigung und Ausmessung / Control visual y dimensional: O.K.	Radioactivity inspection / Radioaktivitätskontrolle / Control de Radioactividad: O.K.	Antimixing test / Spektrosk Verwechslungspr / Antimezcla: O.K.	Grain Size / Korngrösse / Tamaño de grano: 6-7

Remarks - Bemerkungen - Observaciones

IC test acc./IK prüfung nach EN ISO 3651-2/98 Met.A. OK
Ferrite % = 1,5
IC test acc./IK prüfung nach ASTM A 262 E.15. OK
A4D min: 30% according to ASTM A479 and ASTM A182
Z min: 50% according to ASTM A182

EDV / EDP
Acc. EN 10.204
Marian Tejedo
Quality Mng.

Works Inspector
Der Werkssachverständige
Inspector de fábrica

We hereby certify that material described herein complies with the requirements agreed on the order.

Firmado digitalmente por / Signed digitally by:
ACEROS INOXIDABLES OLARRA SA - CIF A48663546
Fecha / Date:05-05-2020 08:28

Kohler PRÄZISIONSTECHNIK

Umstempel-Bescheinigung / Certification of re-marking

	Kunde / Customer		Lieferant / Supplier
Besteller: Orderer:	Endress + Hauser SE+Co.KG	**BA-Nr.:** Contract no.:	87164
Bestell-Nr.: Order no.:	163/1951510598	**Artikel-Nr.:** Article no.:	62284414.1
Artikelbez. Article description:	Ölvorlage MOP ND, 71190857	**Stückzahl:** Quantity:	2640
Artikel-Nr.: Article no.:	71190857		

Wir bestätigen, daß der gelieferte Artikel aus folgendem Material
We confirm that the delivered article has been produced from the following material

Werkstoff: Material no.:	1.4404	**Abmessung:** Dimension:	RD43,5
Hersteller.: Manufacturer:	Olarra	**Zeugnis-Nr.** Certificate No.:	406871
Schmelze: Heat no.:	485409		

ausgewiesen durch Abnahmeprüfzeugnis nach DIN EN 10204 - 3.1 von der Firma Kohler Präzisionstechnik gefertigt wurde.
and was expelled by inspection certificate in accordance with DIN EN 10204 - 3.1 by Kohler Präzisionstechnik.

Folgende Kennzeichnung wurde übertragen / The following mark was transferred:

Werkstoff-Nr.: 316L
Material no.:

Chargennr./Kundencharge: 0HTYA
Heat no.:

zusätzl. Stempelungen:
additional marking

Kurzzeichen: KG
Abbreviation:

Außerdem wurde das Teil mit dem Stempel unseres Umstempelberechtigen gekennzeichnet.
The product has been marked with the stamp of our authorized person.

Umstempelung durchgef. von: ☒ Wolfgang Glowania ☐ Heinrich Josten ☐ Sven Scharfe
Re-marking was carried out by: ☐ Ralph Messner ☐ Anton Baumeister

Diese Umstempelung erfolgt mit Zustimmung der Benannten Stelle nach Druckgeräterichtlinie 2014/68/EU der TÜV SÜD Industrie Service GmbH, Kenn-Nr. 0036 vom 12.12.2019, Auftrags-Nr.: 600 130 920
This re-marking follow with consent of the TÜV SÜD Industrie Service GmbH of 12.12.2019, contract no.: 600130920

Datum / Date: 30.09.2020 **Unterschrift** / Signature: W. Glowania

Kohler Präzisionstechnik GmbH & Co.KG, Heerstraße 13, D-78554 Aldingen
Telefon +49 (0) 74 24 / 98 21 0- 0 Fax +49 (0) 74 24 / 98 21 0- 50

F-Umstempelbescheinigung/Aktuelle Ausgabe 04.05.2020 Ersteller: J.Holzer Seite 1/1

EK2000056

LAMINERIES MATTHEY
NOTZ group advanced metal solutions

Lamineries MATTHEY,
branch of Notz Metall AG
Montagu 38
CH-2520 La Neuveville

Tél. +41 32 752 32 32
www.matthey.ch

Métaux laminés à froid
Kaltgewalzte Metalle
Cold rolled metals

Cuivre au béryllium
Berylliumkupfer
Beryllium Copper

Abnahmeprüfzeugnis nach EN 10204-3.1
Los Nr. : 1013771-01 **Prüfzeugnis Nr. : 1**

La Neuveville, 21.01.2020

Lieferanschrift
BERSTSCHEIBEN SCHLESINGER GmbH
Gewerbering 20
DE - 58579 Schalksmühle

Kunde :	**010539**	
I/Bestellung :	**10010**	
U/AB :	**CC-17384**	vom 22.11.2019
U/Lieferschein :	**BL-19143**	vom 21.01.2020
Gelieferte Menge :	**149 kg**	

U/Artikel : **D310A043.0X0.025AA** **1.4435 - Nichtrostender Stahl X2CrNiMo18-14-3 / ~ AISI 316L**

I/Artikel : Rs0025AA0043 Kundenspezifikation: TLB 410000176-F

Schmelze Nr. : 0523544 **Chemische Zusammensetzung**

Element	Fe	C	Si	Mn	P	S	Cr	Mo
Einheit	%	%	%	%	%	%	%	%
Sollwert	Rest	<= 0.03	<= 1	<= 2	<= 0.045	<= 0.015	17 - 19	2.5 - 3
Wert	Rest	= 0.02	= 0.51	= 0.94	= 0.025	= 0.001	= 17.35	= 2.72
Element	N	Ni	Cu					
Einheit	%	%	%					
Sollwert	<= 0.11	12.5 - 15						
Wert	= 0.048	= 12.85	= 0.35					

Abmessungen	Einheit	Ergebnis	Min.	Max.
Dicke	mm	**0.0238**	0.0230	0.0250
Breite	mm	**43.05**	43.00	43.20

Mechanische Eigenschaften	Einheit	Ergebnis	Min.	Max.
Härte	HV	**186**		200
Zugfestigkeit, Rm	N/mm2	**700**	485	720
Dehngrenze, Rp0.2%	N/mm2	**446**	170	450
Bruchdehnung A50mm	%	**23.0**	20.0	

Sonstige Eigenschaften	Einheit	Ergebnis	Min.	Max.
Rauigkeit Ra	µm	**0.06**		0.20
Korngrössen-Kennzahl (ASTM E112 oder ISO 643):		**11.0**	11.0	99.0

LAMINERIES MATTHEY
NOTZ group advanced metal solutions

Lamineries MATTHEY,
branch of Notz Metall AG
Montagu 38
CH-2520 La Neuveville

Tél. +41 32 752 32 32
www.matthey.ch

Métaux laminés à froid
Kaltgewalzte Metalle
Cold rolled metals

Cuivre au béryllium
Berylliumkupfer
Beryllium Copper

Zusätzliche Informationen
Werkstoff-Verwechslungsprüfung: i.O.
Sicht- und Masskontrolle : i.O.
IK-Beständ. (ASTM A262-E/G28(A-B)/ISO3651-2):i.O.
Zustand: lösungsgeglüht/weich
Entfettet, Oberflächenspannung >= 38 mN/m
Oberfläche gemäss EN 10088-2 OK
Gemäss NACE MR0175/ISO15156
Gemäss NACE MR0103/ISO17945

Bemerkungen
Verwechslungsprüfung durch Rückverfolgbarkeit

Es wird bestätigt, dass die Lieferung den Vereinbarungen der Auftragsbestätigung entspricht.

Lamineries MATTHEY,
branch of Notz Metall AG
Leon Felipe Neri
Abnahmebeauftragte

LAMINERIES MATTHEY
NOTZ group advanced metal solutions

Lamineries MATTHEY,
branch of Notz Metall AG
Montagu 38
CH-2520 La Neuveville

Tél. +41 32 752 32 32
www.matthey.ch

Métaux laminés à froid
Kaltgewalzte Metalle
Cold rolled metals

Cuivre au béryllium
Berylliumkupfer
Beryllium Copper

Inspection Certificate according to EN 10204-3.1
Batch No. : 1013771-01 **Certificate No. : 1**

La Neuveville, 21.01.2020

Ship-to
BERSTSCHEIBEN SCHLESINGER GmbH
Gewerbering 20
DE - 58579 Schalksmühle

Customer :	**010539**	
Y/Order :	**10010**	
O/Confirmation :	**CC-17384**	dated 22.11.2019
O/Delivery Note :	**BL-19143**	dated 21.01.2020
Delivered Qty :	**149 kg**	

O/Part No. : **D310A043.0X0.025AA** **1.4435 - Stainless steel / X2CrNiMo18-14-3 / ~ AISI 316L**

Y/Part No. : Rs0025AA0043 Customer specification: TLB 410000176-F

Heat No. : 0523544 **Chemical composition**

Element	Fe	C	Si	Mn	P	S	Cr	Mo
Unit	%	%	%	%	%	%	%	%
Limit	Rem.	<= 0.03	<= 1	<= 2	<= 0.045	<= 0.015	17 - 19	2.5 - 3
Value	Rem.	= 0.02	= 0.51	= 0.94	= 0.025	= 0.001	= 17.35	= 2.72
Element	N	Ni	Cu					
Unit	%	%	%					
Limit	<= 0.11	12.5 - 15						
Value	= 0.048	= 12.85	= 0.35					

Dimensional attributes	Unit	Result	Min.	Max.
Thickness	mm	**0.0238**	0.0230	0.0250
Width	mm	**43.05**	43.00	43.20

Mechanical properties	Unit	Result	Min.	Max.
Hardness	HV	**186**		200
Tensile Strength, Rm	N/mm2	**700**	485	720
Yield Stress, Rp0.2%	N/mm2	**446**	170	450
Elongation A50mm	%	**23.0**	20.0	

Other properties	Unit	Result	Min.	Max.
Roughness Ra	µm	**0.06**		0.20
Grain size number (ASTM E112 or ISO 643):		**11.0**	11.0	99.0

LAMINERIES MATTHEY
NOTZ group advanced metal solutions

Lamineries MATTHEY,
branch of Notz Metall AG
Montagu 38
CH-2520 La Neuveville

Tél. +41 32 752 32 32
www.matthey.ch

Métaux laminés à froid
Kaltgewalzte Metalle
Cold rolled metals

Cuivre au béryllium
Berylliumkupfer
Beryllium Copper

Additional information
Test of material confusion: ok
Visual and dimensional control: ok
Inter. Cor. (ASTM A262-E/G28 (A-B)/ISO 3651-2):ok
Temper: (solution) annealed
Degreased, surface tension >= 38 mN/m
Surface according to EN 10088-2 OK
According to NACE MR0175/ISO15156
According to NACE MR0103/ISO17945

Remarks
Test of material confusion by traçability

We hereby confirm that the shipment corresponds to the stipulations of the order acknowledgment.

Lamineries MATTHEY
branch of Notz Metall AG
Leon Felipe Neri
Inspector / Expert

Berstscheiben Schlesinger GmbH Schalksmühle	**Umstempelbescheinigung für Werkstoffe EN 10204-3.1** CERTIFICATE FOR MATERIAL EN 10204-3.1

Besteller / Customer: **Endress + Hauser SE & Co. KG**

Bestell-Nr / Order-no: **625-1017991277**

Zeichnungsnummer / Drawing-no: **211007188-B**

E+H Materialnummer: **52021682**

Zeugnisnummer / Certificate-no: **Batch No.: 1013771-01 Certificate No.: 1**

E+H-Identnummer / E+H-identnumber: **11AX9**

Wir bestätigen hiermit, dass die gelieferten **Teile** **0028m00001** aus **Werkstoff** **1.4435** in den **Abmessungen** **0,025 x 43mm**, ausgewiesen durch **Abnahmeprüfzeugnis 3.1** nach EN 10204 der **Firma** **Lamineries MATTHEY,** gefertigt wurden und die **Stempelung** **EK2000056** vor dem Trennen durchgeführt worden ist.

We herewith confirm, that the supplied parts 0028m00001 are made of material 1.4435 with dimensions 0,025 x 43mm approved with Mill Test Certificate 3.1 acc. EN 10204 of company Lamineries MATTHEY and the stamping EK2000056 has been transferred before the cutting process.

Kennzeichnung alt / marking old: **1013771-01**

Kennzeichnung neu / marking new: **EK2000056 / 11AX9**

Mit der Umstempelung beauftragt / Permission for stamping has been given to:

Herr Albrecht (A):

R. Albrecht

Das Umstempeln erfolgt mit Zustimmung des RWTÜV (TÜV-Az.: 8114413340)
Stamping will be done with permission of the RWTÜV (control-no. 8114413340)

Datum: 16.11.2020

Berstscheiben Schlesinger GmbH

i.A. J. Werthschulte

A.10.7 Test certificate

Testbericht

Endress+Hauser
People for Process Automation

Endprüfprotokoll

Bestellinformation

Kunde	Emmerthaler Apparatebau GmbH
Kundenbestellung	BST2101836/ 0
Auftragsnummer / Position	3023913786/0020
Interne Auftragsnummer / Position	3020298419000020

Geräteinformation

Bezeichnung	Cerabar S PMP71
TAG	.
Seriennummer	S807570109C
Bestellcode	PMP71-1XX80/125
Erweiterter Bestellcode	PMP71-1BA1PE1GAABA+Z1

Zusätzliche Information

Ausgang	4...20 mA, HART
Softwareversion	02.30.06
Sensor Messbereich	-1...10 bar
Eingestellter Messbereich	0...10 bar
Max. zulässige Messabweichung	±0.05 %
Ausgangsmodus	linear

Verfahren

Testspezifikation	P0043, Vergleich des Prüflings (UUT) mit einem Normal
Prüfanlage	1231

Messbedingungen

Umgebungstemperatur	24.5 °C ±1 °C
Umgebungsluftdruck	974.3 mbar ±0.2 mbar
Umgebungsluftfeuchte	38.9 % rel. ±10 % rel.
Prüflage	

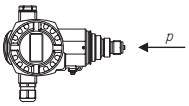

Durchführung

Maulburg, 2021-08-19, P00006

Dieses Dokument wurde elektronisch erstellt und ist ohne Unterschrift gültig.

Endress+Hauser SE+Co. KG
Postfach/P.O. Box 1261
D-79690 Maulburg
Germany
www.endress.com

Dokument-ID: FIR / S807570109C

Seite 1/2

Testbericht

Endress+Hauser
People for Process Automation

Endprüfprotokoll

Testergebnis

Abweichung
% des eingestellten Messbereichs

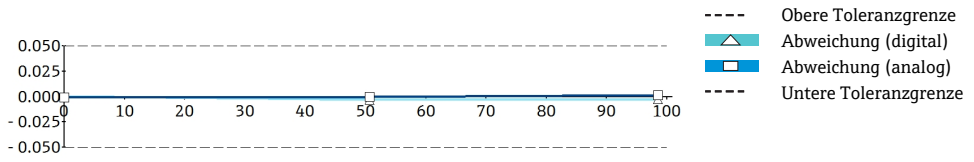

Test-punkt [%]	Referenz Druck [bar]	UUT Ausgang (digital) [bar]	Mess-fehler (digital) [%]	Mess-fehler (digital) [bar]	Referenz Druck (Iout bere.) [mA]	UUT Ausgang (analog) [mA]	Mess-fehler (analog) [%]
0	0.00010	0.00012	0.00023	0.00002	4.00016	4.00004	-0.00073
51	5.07305	5.07274	-0.00312	-0.00031	12.1169	12.1168	-0.00046
99	9.85055	9.85032	-0.00234	-0.00023	19.7609	19.7611	0.00115

Hiermit bestätigen wir, dass alle Tests aus dem Qualitätsplan (IP0008P) erfolgreich durchgeführt wurden.

Test	Verfahrensnummer	Testbeschreibung
Vertragsprüfung	TS00001F	Gemäß den Anforderungen aus ISO 9001
Wareneingangsprüfung	TS00003F	Verifikation der Einhaltung der spezifizierten Anforderungen
Leiterplattentest	TS00009F	In-Circuit-Test und Funktionsprüfung
Hochspannungstest	TS00002F	Die verwendete Spannung wird abhängig von der Betriebsspannung, den Anschlüssen und Zulassungen und in Übereinstimmung mit geltenden nationalen / internationalen Normen verwendet
Schweißprüfung	TS00010F	Qualität und Dichtheit der Schweißnähte
Druckprüfung	TS00007F	Test der mechanischen Stabilität der drucktragenden Teile
Funktionsprüfung des Sensors	TS00022P	Prüfung der Sensorfunktion
Gerätekalibration	TS00023P	Messung, Abgleich und Verifikation von Messanfang, Messende und Ausgangssignal
Endprüfung des Geräts	TS00024P	Verifikation der allgemeinen Funktionalität und kundenspezifischer Einstellungen
Ausgangs-Sichtprüfung	TS00006F	Sichtprüfung auf Vollständigkeit und Korrektheit des Geräts und der Kennzeichnungen
Logistische Verifikation	TS00005F	Automatische Verifikation in der Lieferphase über Barcode, dass das Gerät dem Auftrag entspricht

Wir bestätigen, dass die zu Qualitätsprüfungen des Erzeugnisses eingesetzten Messmittel gültig kalibriert waren und auf nationale bzw. internationale Normale rückführbar sind.

Prüfbescheinigung

Endress+Hauser
People for Process Automation

Abnahmeprüfzeugnis gemäss EN 10204 - 3.1

Bestellinformation

Kunde	Emmerthaler Apparatebau GmbH Deutschland-31860 Emmerthal
Kundenbestellung	BST2101836/ 0
Auftragsnummer / Position	3023913786/000020
Interne Auftragsnummer / Position	3020298419/000020

Geräteinformationen

Bezeichnung	Cerabar S PMP71
TAG	.
Seriennummer	S807570109C
Bestellcode	PMP71-1XX80/125 PMP71-1BA1PE1GAABA+Z1

Erklärung

Hiermit bestätigen wir, dass die gelieferten Erzeugnisse den Vereinbarungen bei der Bestellung entsprechen. Gleichzeitig wird bestätigt, dass die festgestellten Prüfergebnisse die Anforderungen aus der Bestellung erfüllen. Darüber hinaus wird bescheinigt, dass bei der Herstellung der nachstehend aufgeführten Erzeugnisse die vorgeschriebenen spezifischen Prüfungen nach den bestehenden Endress+Hauser internen Prüfvorgaben durchgeführt und die erforderlichen Freigaben erteilt wurden. Die aufgelisteten Materialien sind mediumberührt und oder drucktragend.

Bauteileliste

Teil	Int. lot	Schmelze	Zeugnis-Nr.	Material	Hersteller
Sensor	0HTYA	485409	406871	1.4404	OLARRA
Membran	*11AX9	0523544	1013771-01	1.4435	MATTHEY
Adapter	126M0	117006	84306946 000010	1.4404	UGITECH

Die mit *gekennzeichneten internen Chargennummern dienen der internen Rückverfolgbarkeit und sind am Gerät nicht hart (nicht sichtbar) markiert.

Abnahmebeauftragter

Maulburg, 2021-08-20, i.A. Christian Doll

Dieses Dokument wurde elektronisch erstellt und ist ohne Unterschrift gültig.

Endress+Hauser SE+Co. KG
Hauptstrasse 1
79689 Maulburg
Deutschland
www.endress.com

Dokument-ID: 3020298419/3023913786_000020_S807570109C

A.11 Temperature transmitter

Name	Data
Designation	*Pressure gauge*
Type	TMT 142 / Thermowell TW 10
Number	
Type of manual	*Technical documentation*
Manufacturer	Endress & Hauser AG

Place of installation	TAG No.	Link
Blower oil system	3.2.3.X31	
Gearbox oil system 50 L	3.2.3.X52	linktarget doesn't exist but @y.link.required='true'
Gearbox oil system 100 L	3.2.3.X52	linktarget doesn't exist but @y.link.required='true'

A.11.1 Operating instructions

Level Pressure Flow Temperature Liquid Analysis Registration Systems Components Services Solutions

Operating Instructions

iTEMP® HART® TMT142

Temperature Field Transmitter

HART® FIELD COMMUNICATION PROTOCOL

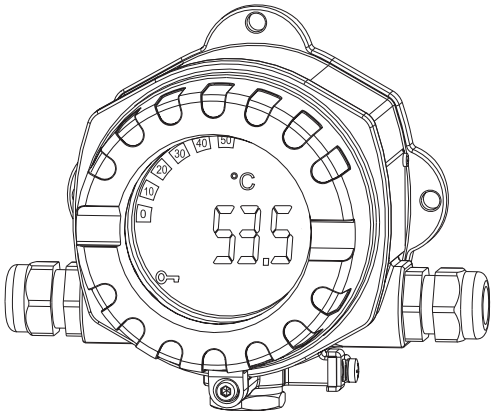

BA191R/09/a3/12.06
51009174

Device software
01.03.03

Endress+Hauser
People for Process Automation

TMT142

de

Temperaturfeldtransmitter
Betriebsanleitung

(Bitte lesen, bevor Sie das Gerät in Betrieb nehmen)
Gerätenummer:.....

Deutsch
ab Seite 3

en

Temperature field transmitter
Operating manual

(Please read before installing the unit)
Unit number:.....

English
from page 47

fr

Transmetteur de température
Mise en service

(A lire avant de mettre l'appareil en service)
N° d'appareil :.....

Français
á page 91

Brief overview

For rapid and easy commissioning:

Safety instructions	→ Page 50
▼	
Installation	→ Page 53
▼	
Wiring	→ Page 55
▼	
Display and operating elements	→ Page 58
▼	
Commissioning	→ Page 63
Quick SET UP – quick access to device configuration for standard operation	

Table of contents

1 Safety instructions 50

1.1 Designated use 50
1.2 Installation, commissioning, operation 50
1.3 Operational safety 50
1.4 Return 50
1.5 Notes on safety conventions and icons 51

2 Identification 52

2.1 Device designation 52
2.2 Scope of delivery 52
2.3 Certificates and approvals 52

3 Installation 53

3.1 Quick installation guide 53
3.2 Installation conditions 54
3.3 Installation 54
3.4 Installation check 54

4 Wiring 55

4.1 Quick wiring guide 55
4.2 Connecting the sensor 55
4.3 Connecting the measuring unit 56
4.4 Screening and potential equalisation 57
4.5 Degree of protection 57
4.6 Connection check 57

5 Operation 58

5.1 Display and operating elements 58
5.2 Local operation 59
5.3 Communication using the HART® protocol 60

6 Commissioning. 63

6.1 Installation check 63
6.2 Switch on the device 63
6.3 Quick Setup 63
6.4 Device configuration 64

7 Maintenance. 72

8 Accessories. 72

9 Trouble-shooting 73

9.1 Trouble-shooting instructions 73
9.2 Error messages 73
9.3 Application errors without messages 75
9.4 Spare parts 77
9.5 Return 79
9.6 Disposal 79
9.7 Software history 79

10 Technical data 80

11 Appendix. 86

11.1 The Callendar - van Dusen Method 86
11.2 Polynomial RTD 88

Index 89

1 Safety instructions

1.1 Designated use

- The device is a universal and configurable temperature field transmitter for resistance thermometers (RTD), thermocouples (TC) and resistance and voltage transmitters. The device is designed for installation in the field.
- The manufacturer does not accept liability for damage caused by improper or non-designated use.

1.2 Installation, commissioning, operation

Please note the following:

- Mounting, electrical installation, commissioning and maintenance of the device must only be carried out by trained technical personnel authorised to perform such work by the owner-operator. They must have read and understood these Operating Instructions and must follow the instructions they contain.
- The device may only be operated by staff authorised and instructed by the owner-operator. Strict adherence to the instructions in these Operating Instructions is mandatory.
- The installer must ensure that the measuring system is correctly connected in accordance with the electrical wiring diagrams.
- Observe local regulations governing the opening and repair of electrical devices.

1.3 Operational safety

The measuring device meets the general safety requirements of EN 61010 and the EMC requirements of EN 61326 as well as NAMUR recommendations NE 21, NE 43 and NE 89.

⚠ Warning!
Power must be fed to the device from an 11 to 40 VDC power supply in accordance with NEC Class 02 (low voltage/current) with short-circuit power limit to 8 A/150 VA.

Hazardous area
Separate Ex documentation is provided for measuring systems used in hazardous areas. This documentation is an integral part of these Operating Instructions. The installation instructions and connection data it contains must be observed!

1.4 Return

To reuse later or in case of repair, the device must be packed in protective packaging, preferably the original packaging. Repairs must only be carried out by your supplier's service organisation or specially trained personnel.
Enclose a note describing the fault and the application when sending the unit in for repair.

1.5 Notes on safety conventions and icons

The safety instructions in these Operating Instructions are labelled with the following safety icons and symbols:

Caution!
This symbol indicates an action or procedure which, if not performed correctly, can result in incorrect operation or the destruction of the device.

Warning!
This symbol indicates an action or procedure which, if not performed correctly, can result in injury, a safety hazard or the destruction of the device.

Note!
This symbol indicates an action or procedure which, if not performed correctly, can have an indirect effect on operation or trigger an unexpected response on the part of the device.

2 Identification

2.1 Device designation

2.1.1 Nameplate

Compare the nameplate on the device with the following diagram:

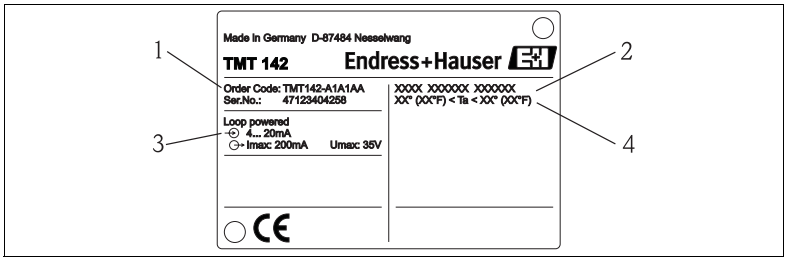

Fig. 1: Nameplate of the field transmitter (example)

1 Order code and serial number of the device
2 Degree of protection and approvals
3 Power supply and output signal
4 Ambient temperature

2.2 Scope of delivery

The scope of delivery of the field transmitter comprises:

- Temperature field transmitter
- Dummy plug
- Operating Instructions
- ATEX Operating Instructions for deploying a device permitted for use in hazardous areas

2.3 Certificates and approvals

CE mark, declaration of conformity
The temperature field transmitter is designed to meet state-of-the-art safety requirements, has been tested and left the factory in a condition in which it is safe to operate. The device meets the relevant standards and directives as per EN 61 010 "Safety requirements for electrical equipment for measurement, control and laboratory use".
The device described in these Operating Instructions thus meets the legal requirements of the EU directives. The manufacturer confirms that the device has been tested successfully by affixing the CE mark.

UL recognized component to UL 3111-1

CSA General Purpose

3 Installation

3.1 Quick installation guide

If the sensor is fixed then the unit can be fitted directly to the sensor.
If the sensor is to be mounted at a right angle to the cable gland, swap the dummy plug and cable gland.
The device can be mounted directly on the wall. A mounting bracket is available for pipe mounting (see Fig. 4). The illuminated display can be mounted in four different positions (see Fig. 2):

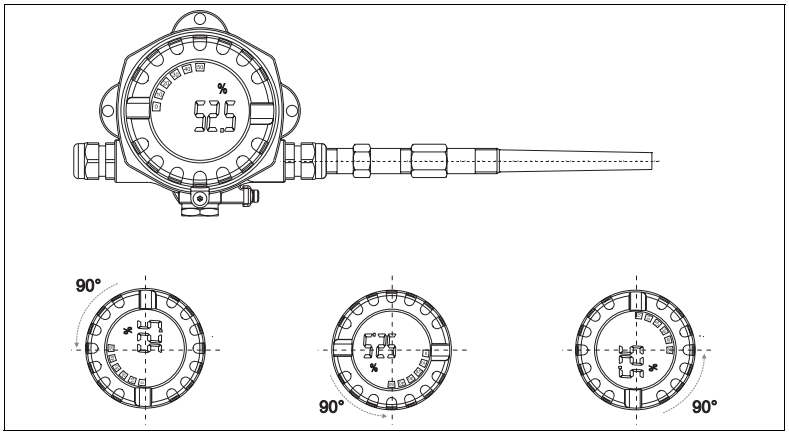

Fig. 2: Temperature field transmitter with sensor, 4 display positions, can be plugged-in in 90° steps

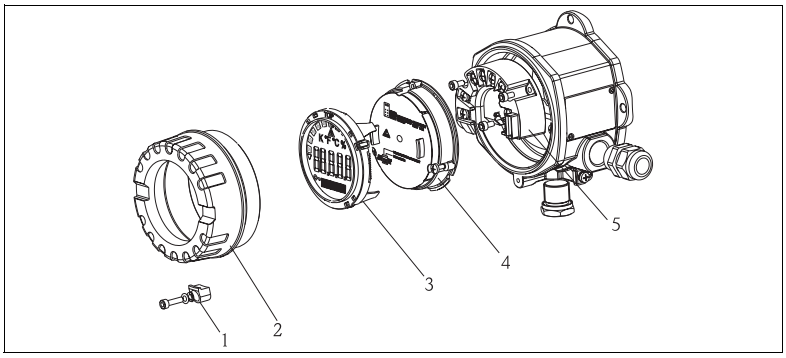

Fig. 3: Turning the display

1. Remove the cover clamp (Pos. 1).
2. Unscrew the housing cover together with the O-ring (Pos. 2).
3. Remove the display with retainer (Pos. 3) from the electronics module (Pos. 4). Adjust the display with retainer in 90°stages to your desired position and rearrange it on the particular slot in the electronics module.
4. Then screw on the housing cover together with the O-ring. Mount the cover clamp.

3.2 Installation conditions

3.2.1 Dimensions

The dimensions of the device can be found in chapter 10 ''Technical data".

3.2.2 Installation point

Information on installation conditions, such as ambient temperature, protection classification, climatic class etc., can be found in chapter 10 "Technical data".

3.3 Installation

3.3.1 Direct wall mounting

Proceed as follows to mount the device directly on wall:
- Drill 2 holes
- Attach the device to the wall with 2 screws (M6).

3.3.2 Pipe installation

The mounting bracket is suited for pipes with a diameter between 1.5" – 3.3".
Proceed as follows to mount the device on a pipe:
- Attach the mounting bracket to the pipe
- The additional mounting plate must be used for pipes with a diameter of 1.5" to 2.2".
- Fix the device to the mounting bracket with the two screws supplied. The mounting plate is not needed for pipes with a diameter of 2.2" – 3.3".

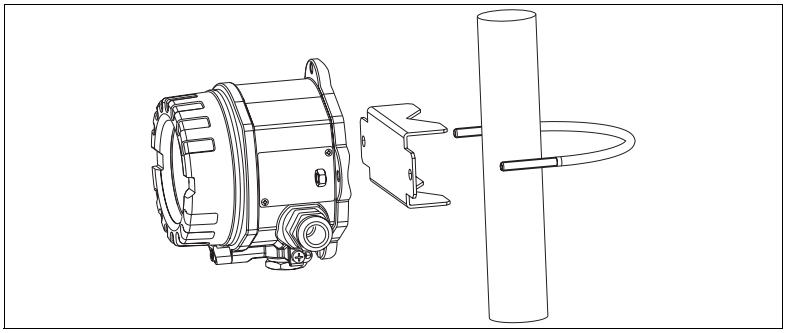

Fig. 4: Mounting the field transmitter with the mounting bracket, see 'Accessories' section

3.4 Installation check

After installing the device, always run the following final checks:

Device condition and specification	Hint
Is the device visibly damaged (visual check)?	–
Does the device comply to the measurement point specifications, such as ambient temperature, measurement range etc.?	See chapter 10 "Technical data"

4 Wiring

Caution!
When installing Ex-approved devices in a hazardous area please take special note of the instructions and connection schematics in the respective Ex documentation added to this operating manual. The local E+H representative is available for assistance if required.

For wiring the device proceed as follows:

1. Remove the cover clamp (see Fig. 3, item 1).
2. Remove the device cover (see Fig. 3, item 2).
3. Remove the display from the electronics module (see Fig. 3, item 3).
4. Open the 2 screws of the electronics unit and remove the electronics unit (see Fig. 3, item 4).
5. Open the cable gland at the device (see Fig. 3, item 5).
6. Feed the cable through the opening in the cable gland.
7. Connect the wires (→ Fig. 5).
8. Make sure that the terminal screws are tight. Re-seal the cable gland by screwing the cover back on.
9. In order to avoid connection errors always take note of the hints given in the section connection check!

4.1 Quick wiring guide

Terminal layout

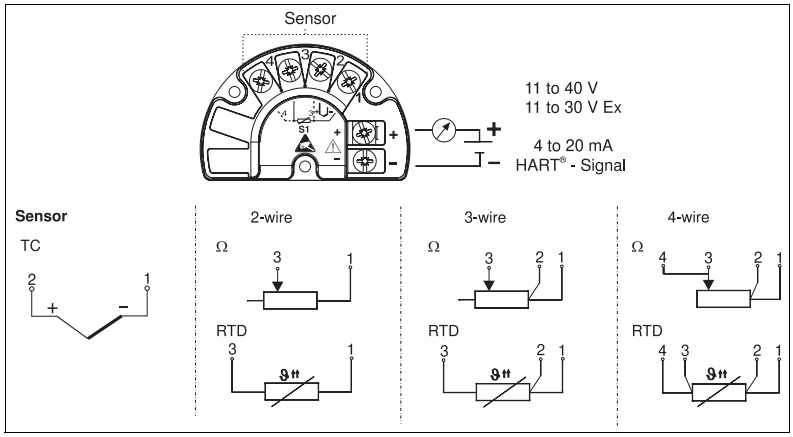

Fig. 5: Wiring the field transmitter

Caution!
Protect the terminals from electrostatic discharge. Failure to observe this may result in destruction of parts of the electronics.

4.2 Connecting the sensor

Note!
Please refer to Section 4.1 "Quick wiring guide" for the terminal assignment of the sensor connections.

4.3 Connecting the measuring unit

Caution!
- Switch off power supply before installing or connecting the device. Failure to observe this may result in destruction of parts of the electronics.
- If the device has not been grounded as a result of the housing being installed, we recommended grounding it via one of the ground screws.

4.3.1 HART® connection

Note!
If the HART® communication resistance is not built into the power supply then a 250 Ω communication resistor must be fitted into the 2-wire supply lines.
For connection hints, please take special notice of the documentation supplied by the HART® Communication Foundation, specially HCF LIT 20: “HART, a technical overview”.

Connection using the E+H power supply RN 221N

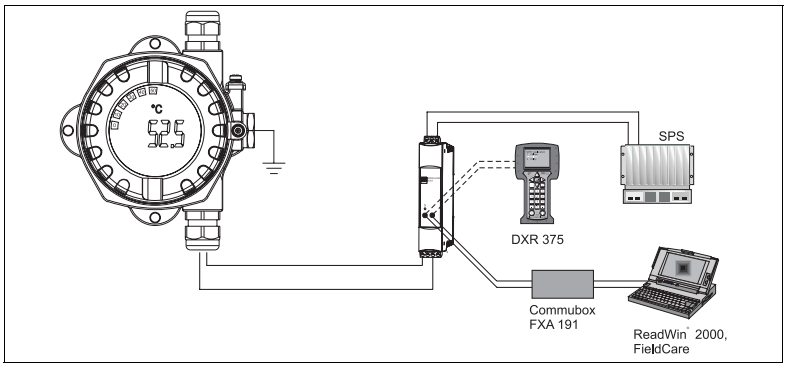

Fig. 6: HART® connection with the E+H power supply RN 221N

Connection using other power supplies

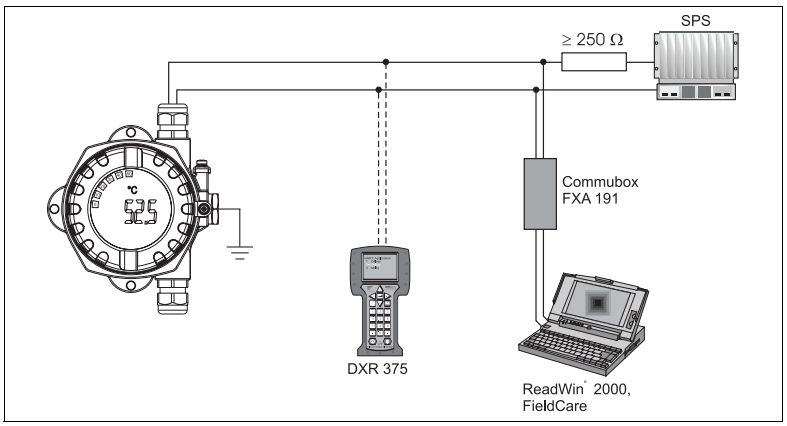

Fig. 7: HART® connection using other power supplies

4.4 Screening and potential equalisation

Please take note when installing the device:
If screened (shielded) cables are used then the screen connected to the output (output signal 4 to 20mA) must be at the same potential as the screen at the sensor connection!
When operating in plants with high electromagnetic fields, it is recommended that all cables be screened using a low ohm ground connection. Due to the possible danger of lightning strikes screening is also recommended for cables that are run outside buildings!

4.5 Degree of protection

The device conforms to the requirements to IP 67 ingress protection. In order to fulfil an IP 67 degree of protection after installation or service, the following points must be taken into consideration:

- The housing seals must be clean and undamaged before they are replaced into the sealing rebate. If they are found to be too dry then they should be cleaned or even replaced.
- All housing screws and covers must be pulled tight.
- The cables used for connection must be of the correct specified outside diameter (e.g. M20 x 1.5, cable diameter from 8 to 12 mm; 0.315 to 0.47 in).
- Tighten cable gland (→ Fig. 8).
- Loop the cable before placing into the cable entry ("Water sack", → Fig. 8). This means that any moisture that may form cannot enter the gland. Install the device so that the cable entries are not facing upwards.
- Cable entries not used are to be blanked off using the blanking plates provided.
- The protective olive must not be removed from the cable gland.

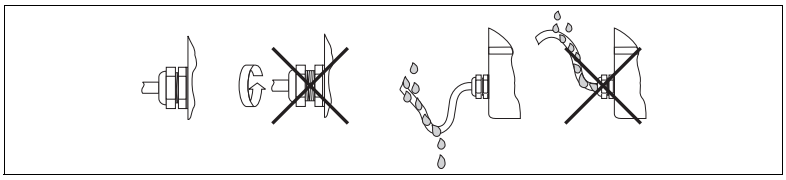

Fig. 8: Connection hints to retain IP 67 protection

4.6 Connection check

After the electrical installation of the device, always perform the following final checks:

Device condition and specification	Hint
Are the device or the cables damaged (visual check)?	–
Electrical connection	Hint
Is the cable installation correctly separated, with no loops or crossovers?	–
Are the cables load relieved?	–
Have the cables been correctly connected? Compare with the connection schematic on the terminals or → Fig. 5.	See connection schematic on the housing
Are all terminal screws tightened? Is the cable entry sealed? Is the housing cover screwed tight?	Visual check

5 Operation

5.1 Display and operating elements

5.1.1 Display

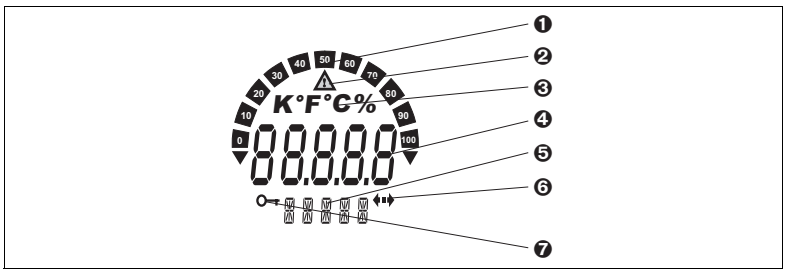

Fig. 9: LC display of the field transmitter (illuminated, can be plugged in 90° stages)

5.1.2 Display symbols

Item No.	Function	Description
1	Bargraph display	In 10 % stages with indicators for overranging/ underranging. The bargraph display flashes when an error occurs.
2	'Caution' indicator	This appears in the event of an error or warning
3	Unit display K, °F, °C or %	Unit display for the measured value displayed
4	Measured value display (digit height 20.5 mm)	The measured value is displayed. In the event of a warning, the display switches between the measured value and the code of the warning. In the event of an error, the error code is displayed instead of the measured value.
5	Status and information display	Indicates which value is currently shown on the display. A customer-specific text can be entered for PV. In the event of a warning, 'WARN' is displayed along with the code for the warning. In the event of an error, 'ALARM' is displayed.
6	'Communication' display	The communication symbol appears for read and write access via the HART® protocol
7	'Configuration blocked' display	The 'configuration blocked' symbol appears if configuration via software or hardware is blocked.

5.2 Local operation

5.2.1 Hardware setting

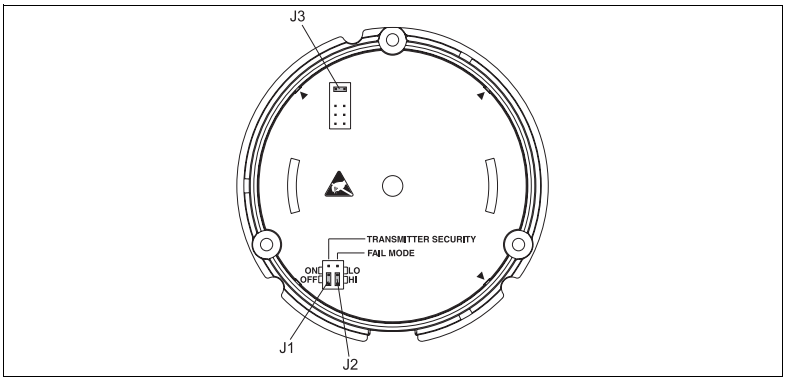

Fig. 10: Hardware settings via jumpers J1, J2 and J3

Caution!
Protect the terminals from electrostatic discharge. Failure to observe this may result in destruction of parts of the electronics.

Jumpers J1, J2 and J3 for the hardware setting are located at the electronics module. To set the jumper, open the threaded joint of the electronics module (opposite the threaded joint of the connection compartment) and remove the display if necessary.

Hardware locking the configuration with jumper J1

TRANSMITTER SECURITY	
ON	Configuration locked
OFF	Configuration enabled

The hardware setting for configuration locking has priority over the software setting.

Setting the failsafe mode via the hardware with jumper J2

FAILURE MODE	
LO	≤ 3.6 mA
HI	≥ 21.0 mA

The failsafe mode set via the jumpers only takes effect if the microcontroller fails.

Note!
Please check that the hardware and software setting for the failsafe mode match.

Hardware setting with jumper J3 (only for devices without a display)

If jumper J3 is set, the minimum operating voltage can be reduced from 11 V to 8 V.

5.3 Communication using the HART® protocol

The set-up and measured value read out of the measuring device is done using the HART® protocol. The digital communication is done using the 4 to 20 mA current output HART® (see Figs. 4 and 5). There are a number of possible set-up methods available to the user:

- Operation using the universal handheld module "HART® Communicator DXR 375".
- Operation using a PC combined with Endress+Hauser operating software, e.g. 'FieldCare' or 'ReadWin® 2000' as well as a HART® modem, e.g. 'Commubox FXA 191'.
- Operating programs of other manufacturers ('AMS', Fisher Rosemount; 'SIMATIC PDM', Siemens).

Note!
If communication errors occur in the Microsoft® Windows NT ® Version 4.0 and Windows® 2000 operating systems the following measure is to be taken:
Switch off setting "FIFO active".

In order to do this follow these steps.

1. On Windows NT® Version 4.0:
   Select the menu point "COM-Port" using the menu "START" ➔ "SETTINGS" ➔ "CONTROL PANEL" ➔ "PORTS". Using the menu string "SETTINGS" ➔ "ADVANCED" switch the command "FIFO active" off. Now restart the PC.
2. For Windows® 2000 and Windows® XP (classic category view):
   Select "Advanced settings for COM1" using the menu "START" ➔ "SETTINGS" ➔ "CONTROL PANEL" ➔ "SYSTEM" ➔ "HARDWARE" ➔ "DEVICE MANAGER" ➔ "PORTS (COM and LPT)" ➔ "COMMUNICATIONS PORT (COM1)" ➔ "CONNECTION SETTINGS" ➔ "ADVANCED". Deactivate the "Use FIFO buffer". Now restart the PC.

5.3.1 HART® Communicator DXR 375

Note!
With the HART® handheld module, all device functions are selected by means of various menu levels with the aid of the function matrix (see Fig. 12). All the device functions are explained in chapter 6.4.1 "Description of Device Functions".

Procedure:

1. Switch on the handheld module:
   – Measuring device not yet connected. The HART® main menu appears. This menu level appears for every HART® programming, i.e. irrespective of the measuring device type. Information on off-line configuration can be found in the Operating Instructions of the “Communicator DXR 375” handheld module.
   – Measuring device is already connected. The 1st menu level of the device function matrix appears directly (see Fig. 11). All the functions accessible under HART® are systematically arranged in this matrix.
2. Select the function group (e.g. Sensor) and then the desired function, e.g. “Sensor type”.
3. Enter type or change the setting. Then confirm with the function key F4 “Enter”.
4. “SEND” appears via the function key “F2”. Pressing the F2 key transfers all the values entered with the handheld module to the device measuring system.
5. With the "F3" function key HOME, you return to the 1st menu level.

✎ Note!

- With the HART® handheld module, all parameters can be read and programming is disabled. However, you can enable the HART® function matrix by entering 241 in the SECURITY LOCKING function. The enable status is retained even after a power failure. Delete the release code 241 to lock the HART® function matrix again.
- Detailed information can be found in the HART® instruction manual that can be found in the handheld module transport pouch.

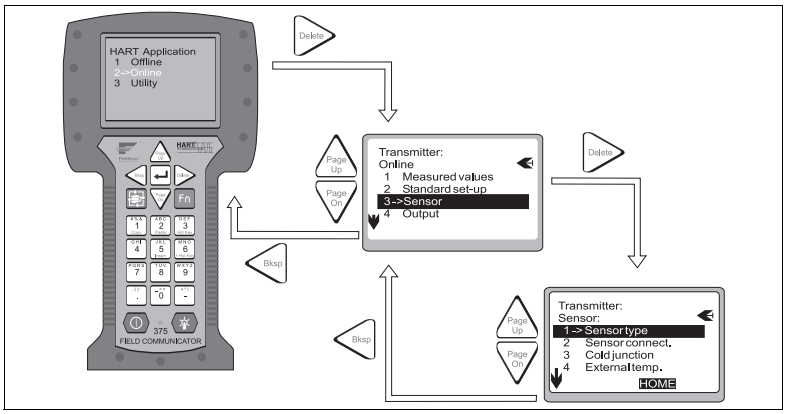

Fig. 11: Configuration at the handheld module, using 'Sensor input' as an example'

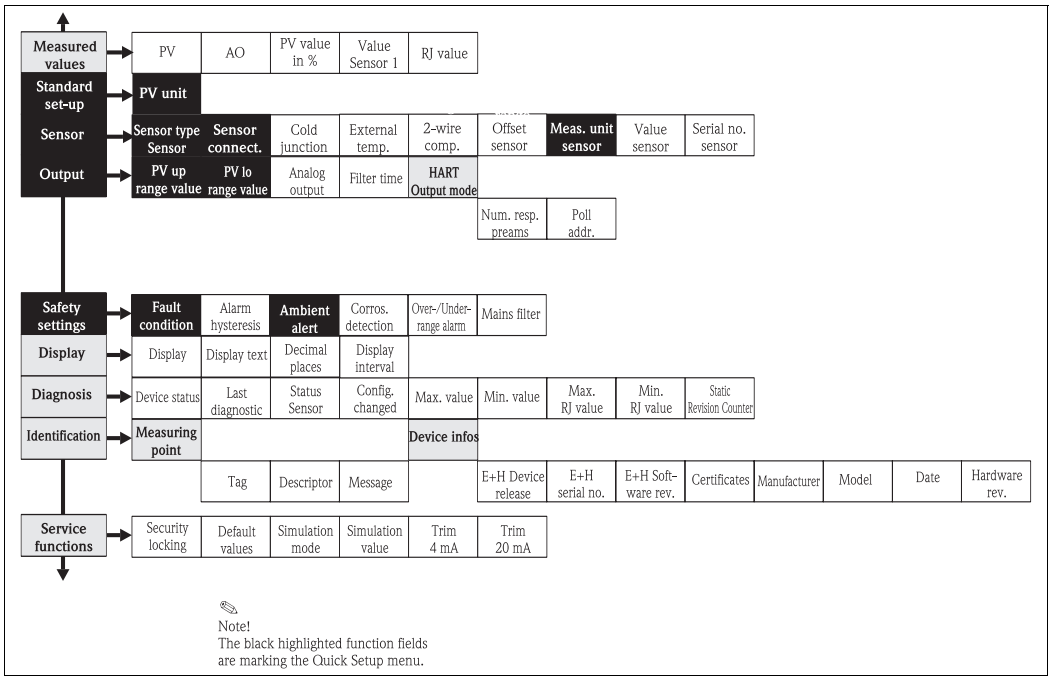

Fig. 12: HART® function matrix

5.3.2 FieldCare

FieldCare is a universally applicable service and configuration software based on FDT/DTM technology. Connection is established by means of a HART® modem, e.g. Commubox FXA 191. Detailed information is provided in the installation instructions of the FieldCare configuration software (see chapter 'Documentation'). The DTMs available for the device also allow operation by means of operating programs of other manufacturers that support FDT/DTM technology.

5.3.3 ReadWin® 2000

ReadWin® 2000 is a universally applicable service and configuration software. Connection is made using a HART® modem, e.g. Commubox FXA 191. The operating software offers the user the following possibilities:

- Set-up device functions
- Measured value visualisation
- Device parameter data storage
- Measuring point documentation

Caution!
The analogue output is undefined when downloading the device function parameters from ReadWin® 2000 to the device.

Further in-depth information to operation via ReadWin® 2000 can be found in the online documentation of the software. ReadWin® 2000 can be downloaded free of charge from the following address:

- www.endress.com/Readwin

5.3.4 Command classification in the HART® protocol

The HART® protocol makes it possible for configuration and diagnostic purposes to transmit measured and device data between the HART® master and the respective field device. HART® masters such as the handheld module or PC-based operating programmes (e.g. FieldCare) require so-called device description files (DD = device descriptions, DTM), these make it possible to access all information in a HART® device. Transmission of such information is done exclusively using "commands".

There are three command classifications:

- Universal commands
  Universal commands are supported and used by all HART® devices. Combined are, for example, the following functionalities:
  – Recognising HART® device
  – Read out of digital measured values
- Common practice commands:
  These general commands offer functions that are supported or used by some but not all field devices.
- Device specific commands
  These commands enable access to device specific functions that are not HART® standardised. Such commands access, amongst other things, individual field device information.

Note!
Chapter 6.4.2 contains a list of all HART® commands supported.

6 Commissioning

6.1 Installation check

Before commissioning the measurement point make sure that all final checks have been carried out:
- Checklist “Installation check”
- Checklist “Connection check”

6.2 Switch on the device

Once the power has been connected, the field transmitter is operational.

6.3 Quick Setup

Using the Quick Setup the operator is led through all the most important unit functions, which must be set up for standard measurement operation of the unit.

Standard set-up		
Availability in ReadWin® 2000, HART® handheld terminal DXR 375 (symbol)	ReadWin® 2000	/FieldCare
Function	+	+
PV mode	+	+
PV unit	+	+
Sensor		
Sensor type	+	+
Sensor connection	+	+
Unit	+	+
OUTPUT		
PV lower range value	+	+
PV upper range value	+	+
Safety/maintenance functions		
Fault condition	+	+
Alarm ambient temperature	+	+

Further set-up for special measurement applications are possible (see Section 6.4.1).

6.4 Device configuration

6.4.1 Description of device functions

All parameters that can be read out and set-up for the configuration of the temperature transmitter are listed and described in the following tables. The menu structure in the ReadWin® 2000 PC configuration software and in the HART® handheld module DXR 375 are shown in the following tables.

Note!
Factory default set-up is shown in bold text.

Function group STANDARD SETTINGS			
Availability in ReadWin® 2000, HART® handheld terminal DXR 375 (symbol)		ReadWin® 2000	/FieldCare
PV unit	Enter the unit of the PV (= Primary Value) Input: **° C**, °F, K, R, mV or Ω Note! The setting PV unit has priority, the selection list of the sensor type is shown independently from the PV unit.	+	+

Function group SENSOR						
Availability in ReadWin® 2000, HART® handheld terminal DXR 375 (symbol)					ReadWin® 2000	/FieldCare
Sensor type	**Sensor type**	**Meas. range start**	**Meas. range full scale value**	**min. range**	+	+
IEC 751	**Pt100**	-200 °C (-328 °F)	850 °C (1562 °F)	10 K (18 °F)		
	Pt200	-200 °C (-328 °F)	850 °C (1562 °F)	10 K (18 °F)		
JIS	Pt100	-200 °C (-328 °F)	649 °C (1200.2 °F)	10 K (18 °F)		
IEC 751	Pt500	-200 °C (-328 °F)	250 °C (482 °F)	10 K (18 °F)		
	Pt1000	-200 °C (-328 °F)	250 °C (482 °F)	10 K (18 °F)		
	Ni100	-60 °C (-76 °F)	250 °C (482 °F)	10 K (18 °F)		
	Ni1000	-60 °C (-76 °F)	150 °C (302 °F)	10 K (18 °F)		
Edison Copper Winding No. 15	Cu10	-100 °C (-148 °F)	260 °C (500 °F)	10 K (18 °F)		
SAMA	Pt100	-100 °C (-148 °F)	700 °C (1292 °F)	10 K (18 °F)		
Edison Curve No. 7	Ni120	-70 °C (-94 °F)	270 °C (518 °F)	10 K (18 °F)		

Function group SENSOR						
Sensor type	**Sensor type**	**Meas. range start**	**Meas. range full scale value**	**min. range**	+	+
GOST	Pt50	-200 °C (-328 °F)	1100 °C (2012 °F)	10 K (18 °F)		
	Pt100	-200 °C (-328 °F)	850 °C (1562 °F)	10 K (18 °F)		
	Cu50	-200 °C (-328 °F)	200 °C (392 °F)	10 K (18 °F)		
	Cu100	-200 °C (-328 °F)	200 °C (392 °F)	10 K (18 °F)		
	Polynomial RTD	-200 °C (-328 °F)	850 °C (1562 °F)	10 K (18 °F)		
	Callendar - van Dusen (Pt100)	-200 °C (-328 °F)	850 °C (1562 °F)	10 K (18 °F)		
	TC Type B	0 °C (32 °F)	1820 °C (3308 °F)	500 K (900 °F)		
	TC Type C	0 °C (32 °F)	2320 °C (4208 °F)	500 K (900 °F)		
	TC Type D	0 °C (32 °F)	2495 °C (4523 °F)	500 K (900 °F)		
	TC Type E	-270 °C (-454 °F)	1000 °C (1832 °F)	50 K (90 °F)		
	TC Type J	-210 °C (-346 °F)	1200 °C (2192 °F)	50 K (90 °F)		
	TC Type K	-270 °C (-454 °F)	1372 °C (2501.6 °F)	50 K (90 °F)		
	TC Type L	-200 °C (-328 °F)	900 °C (1652 °F)	50 K (90 °F)		
	TC Type N	-270 °C (-454 °F)	1300 °C (2372 °F)	50 K (90 °F)		
	TC Type R	-50 °C (-58 °F)	1768 °C (3214.4 °F)	500 K (900 °F)		
	TC Type S	-50 °C (-58 °F)	1768 °C (3214.4 °F)	500 K (900 °F)		
	TC Type T	-270 °C (-454 °F)	400 °C (752 °F)	50 K (90 °F)		
	TC Type U	-200 °C (-328 °F)	600 °C (1112 °F)	50 K (90 °F)		
	10 to 400 Ω	10 Ω	400 Ω	10 Ω		
	10 to 2000 Ω	10 Ω	2000 Ω	100 Ω		
	-20 to 100 mV	-20 mV	100 mV	5 mV		
Specific linearisation and sensor matching Selecting the sensor types 'Callendar-van-Dusen' or 'Polynomial RTD' improves the accuracy of the system or defines user-specific linearisation of resistance thermometers. A detailed description of the 'Callendar-van-Dusen' method and 'Polynomial RTD' linearisation is provided in the Appendix to these Operating Instructions.						
	✎ Note! The selection list of the sensor type is displayed depending on the PV unit. Example: When selecting a resistance thermometer the PV unit must first be set to Ω.					
Sensor connection	Input of RTD connection mode. Input: ▪ 2-wire ▪ **3-wire** ▪ 4-wire ✎ Note! Function is only active on selection of a resistance thermometers (RTD) in the device function SENSOR TYPE.				+	+
Cold junction	Selection of the internal (Pt100) or an external comparison measurement point. Input: ▪ **internal** ▪ external ✎ Note! Function is only active on selection of a thermo-couple (TC) in the device function SENSOR TYPE.				+	+
External temperature	Input of the external comparison point measurement value. Input: -40.00 to 85.00 °C (°C, °F, K) **0 °C** ✎ Note! Function is only active when "external" has been selected in the device function COLD JUNCTION.				+	+

Function group SENSOR			
2-wire compensation	Input of cable resistance compensation on a 2-wire RTD connection. Input: **0.00** to 30.00 Ω ✎ Note! Function is only active when a 2-wire connection has been selected in the device function SENSOR CONNECTION.	+	+
Offset	Input of the zero point correction (offset). Input: -10.00 to 10.00 °C (-18.00 to 18.00 °F) **0.00 °C**	+	+
Unit	Display of measurement unit. Sensor unit = PV unit	+	+
Serial no. sensor	Input of the serial number of the sensor connected to this sensor input.	+	+

Function group OUTPUT				
Availability in ReadWin® 2000, HART® handheld terminal DXR 375 (symbol)			ReadWin® 2000	/FieldCare
PV lower range value	Input of 4 mA value. Input: Limitation values see device function SENSOR TYPE. **0 °C**		+	+
PV upper range value	Input of 20 mA value. Input: Limitation values see device function SENSOR TYPE. **100 °C**		+	+
Analog output	Input of the standard (4 to 20 mA) or inverse (20 to 4 mA) current output signal. Input: ▪ **4 to 20 mA** ▪ 20 to 4 mA		+	+
Filter	Selection of the digital filter 1. order (filter time constant). Input: **0** to 60 s		+	+
HART Output/ Multidrop	Preamble	Input: Number of response preambles: 5 to 20 **5**	-	+
	Device address	Input: HART address of the temperature transmitters: **0** to 15 ✎ Note! If addresses > 0, the temperature transmitter is in Multidrop mode and the analogue output is set to 4 mA. Device address is shown on the display in the Multidrop mode		

Function group SAFETY/MAINTENANCE			
Availability in ReadWin® 2000, HART® handheld terminal DXR 375 (symbol)		ReadWin® 2000	/FieldCare
Fault condition	Input of the output signal on sensor rupture or short circuit. Input: ▪ **max** (≥ 21.0 mA) ▪ min (≤ 3.6 mA)	+	+
Error current specification	Input only possible if fault condition = max Input: 21.6 to 23 mA **21.7 mA**	+	+
Alarm hysteresis	Transient alarms are suppressed at the analog output (e.g. caused by electrostatic discharge). Input: ▪ **0 s** ▪ 2 s ▪ 5 s ✎ Note! In the time entered, the last measured value before the alarm is output. If the error is still present after this period, an alarm is signalled.	+	+
Alarm ambient temperature	An alarm for overshooting/undershooting of permitted ambient temperature is deactivated here. Input: ▪ **on** ▪ off ✎ Note! If the ambient temperature alarm is deactivated then the unit will not go into alarm but will transmit a warning. Change is the responsibility of the user.	+	+
Corrosion detection	Sensor connection cable corrosion can lead to false measured value readings. Therefore our unit offers the possibility to recognise any corrosion before the measured values are affected. (see chapter 9.2.1). There are 2 different steps selectable dependent on the application requirements: ▪ **off** (warning output just before reaching the alarm set point. This allows for preventative maintenance/trouble-shooting to be done.) ▪ on (no warning, immediate alarm)	+	+
Alarm for undershooting/ overshooting	Input: ▪ **OFF** If the measuring range is undershot or overshot, the output signal is temperature-linear up to 3.8 mA or 20.5 mA and remains at these values (as per NAMUR NE43). ▪ ON An error is signalled if the measured temperature corresponds to an output value < 3.8 mA or > 20.5 mA, (see 'Fault condition').	+	+
Mains filter	Selection of mains filter ▪ **50 Hz** ▪ 60 Hz	+	+

Function group DISPLAY			
Availability in ReadWin® 2000, HART® handheld terminal DXR 375 (symbol)		ReadWin® 2000	/FieldCare
DISPLAY	Activating the values to be shown on the device display:		
	■ Display: PV (= Primary Value) (DXR=1)	+	+
	■ Display: sensor value (DXR=2)	+	+
	■ Display: RJ value (DXR=8)	+	+
	■ Display Analogue output value (DXR=16)	+	+
	■ Display: Status (DXR=32)	+	+
	■ Display: percentage value (on/off) The primary value (PV) is displayed as a percentage. off (DXR=0) on (DXR=64)	+	+
	✎ Note! In order to activate the values to be shown in the device display using HART® handheld module DXR 375: Add (DXR=x) of the values to be displayed and enter the sum.		
	■ Display: time (2s, 4s, 6s, 8s)	+	+
	■ Display: figures after decimal point (0,1,2)	+	+
	■ Display PV text (customer specific text, 8 characters)	+	+

Function group DIAGNOSTICS			
Availability in ReadWin® 2000, HART® handheld terminal DXR 375 (symbol)		ReadWin® 2000	/FieldCare
Diagnostics	Display of information required for device diagnostics.		
	■ Device status or error code (See chapter 9.2 "Error messages")	+	+
	■ Last error code (status) or previous error code (See chapter 9.2 "Error messages")	+	+
	■ Status sensor (0 = no error; 0 ≠ error)	-	+
	■ Configuration changed	+	+
Diagnostics	■ Static revision The "Static revision" is increased on every parameter change. This is for compliance to 21 CFR Part 11, showing that no further parameter changes have been made.	-	-
	■ Sensor max. value	+	+
	■ Sensor min. value	+	+
	■ RJ max. value	+	+
	■ RJ min. value	+	+
	Display of the maximum process value. The process value will be accepted after starting the measurement. Display of the minimum process value. The process value will be accepted after starting the measurement. Display of the maximum and minimum measured temperatures of the internal Pt100 DIN B comparison measurement point. ✎ Note! Maximum process value is changed to the actual process value on write access. On reset to factory default value the default value is entered **-9999.99**. Minimum process value is changed to the actual process value on write access. On reset to factory default value the default value is entered **+9999.99**.		

Function group IDENTIFICATION			
Availability in ReadWin® 2000, HART® handheld terminal DXR 375 (symbol)		ReadWin® 2000	/FieldCare
Measuring point Input and display of the information relating to the measuring point identification			
Measuring point TAG	Input: 8 characters	+	+
Description	Input: 16 characters	+	+
Message	Input: 32 characters	-	+
Device information Display of the information relating to the device identification			
Device release	Display of device release	-	+
Serial number	11 digit display of the E+H device serial number (equal to that on the legend plate).	+	+
Software version	Display of the software version	+	+
Hardware version	Display of the hardware version	+	+
Certificates	Display of device approvals	-	+
Device Display of the information relating to the HART® device identification			
Manufacturer	Manufacturer's identification character: Endress+Hauser (=17)	-	+
Device type	Device type identification: TMT 142	-	+
Date	Individual use of this parameters	-	+
Hardware revision	Revisions of the devices' electronic components	-	+

Function group SERVICE FUNCTIONS			
Availability in ReadWin® 2000, HART® handheld terminal DXR 375 (symbol)		ReadWin® 2000	/FieldCare
Security locking	Set-up release code. Input: ▪ Lock = 0 ▪ Release = **241**	+	+
Reset to default	Reset to factory default values. Input: 142 **0**	+	+
Output simulation	Activate simulation mode. Input: ▪ **OFF** ▪ ON	+	+
Simulation value	Input of the simulation value (current). Input: 3.58 to 23 mA	+	+

Function group SERVICE FUNCTIONS			
User calibration (trim) analog output	For changing the 4 or 20 mA value by ± 0.150 mA ■ Trimming 4 mA ■ Trimming 20 mA	+	+

Function group MEASURED VALUES			
Availability in ReadWin® 2000, HART® handheld terminal DXR 375 (symbol)		ReadWin® 2000	/FieldCare
PV	PV value	+	+
AO	PV value in mA	-	+
PV %	PV value in %	-	+
Sensor	Sensor process value	-	+
Internal temperature	Internal temperature of the device	-	+

6.4.2 Supported HART® commands

r = read access, w = write access

No.	Description	Access
	Universal Commands	
00	Read unique identifier	r
01	Read primary variable	r
02	Read p.v. current and percent of range	r
03	Read dynamic variables and p.v. current	r
06	Write polling address	w
11	Read unique identifier associated with tag	r
12	Read message	r
13	Read tag, descriptor, date	r
14	Read primary variable sensor information	r
15	Read primary variable output information	r
16	Read final assembly number	r
17	Write message	w
18	Write tag, descriptor, date	w
19	Write final assembly number	w
	Common practice	
34	Write primary variable damping value	w
35	Write primary variable range values	w
38	Reset configuration changed flag	w
40	Enter/exit fixed primary variable current mode	w
42	Perform master reset	w
44	Write primary variable units	w
48	Read additional device status	r
59	Write number of response preambles	w

No.	Description	Access
	Device/E+H specific	
144	Read matrix parameter	r
145	Write matrix parameter	w
231	Check Device Status	r

- HART® command No. 48 (HART-Cmd #48)
  Apart from the response code and the device status byte, the field transmitter calls up a detailed diagnosis by means of Cmd #48. This diagnosis is 8 bytes long.

Byte	Contents	Meaning
1	Overall device status	0 x 01 error: EEPROM 0 x 02 error: ADC 0 x 04 error: channel 1 0 x 10 error: comparison measurement point 0 x 20 error: HART ASIC 0 x 40 warning: measured value range undershoot 0 x 80 warning: measured value range overshoot
2		0 x 01 warning: backup switched on 0 x 02 information: maintenance necessary 0 x 04 information: drift too small/large 0 x 08 information: corrosion at terminals 0 x 10 information: ambient temperature too high/low 0 x 20 information: output current at fixed value 0 x 40 information: no LCD connected or LCD error 0 x 80 information: upload/download active
3		0 x 01 information: device starting 0 x 02 error: supply voltage too low
4		0 x 40 global bit for a warning 0 x 80 global bit for an error
5	Status channel 1	0 x 01 warning corrosion 0 x 02 corrosion 0 x 04 sensor rupture 0 x 08 sensor short circuit 0 x 10 range undershoot 0 x 20 range overshoot 0 x 40 channel not operational 0 x 80 error A/D conversion
7	Extended device status	0 x 01 maintenance necessary 0 x 02 warnings / error present
8	Device operating mode	Always 0

Note!
The Fieldgate FXA520 system component from Endress+Hauser enables remote interrogation, remote diagnosis and remote configuration of connected HART® devices, e.g. message sent automatically by e-mail or SMS. For diagnosis purposes, the device evaluates the first 4 bytes of HART-Cmd #48.

- HART® command No. 231 (HART-Cmd #231)
  The classified diagnosis of the device can be checked by means of this command. Fault classes according to GMA VDE NAMUR 2650 guidelines:

Byte	Contents	Meaning
1	Information acc. to GMA VDE NAMUR 2650	0x01 -F- Fault 0x02 -C- Device in service mode 0x03 -M- Maintenance required 0x04 -S- Out of specification

Byte	Contents	Meaning
2+3	Device error messages, see section 9.2	

Fault classification see Section 9.2 Error messages.

Note!
The intelligent active barrier RN221N with HART® diagnosis from Endress+Hauser communicates cyclically with connected HART® devices and signals diagnosis information via a switching contact.

7 Maintenance

No special maintenance work is required on the device.

8 Accessories

If ordering accessories, please specify the serial number of the unit!

Mounting bracket	▪ Mounting bracket, stainless steel pipe 1.5-3", 316L Order No. 51007995
Cable gland	▪ Cable gland M20x1.5 Order No. 51004949 ▪ Cable gland NPT 1/2" D4-8.5, IP68 Order No. 51006845 ▪ Cable entry adapter M20x1.5 to NPT 1/2" Order No. 51004387
Overvoltage protection	▪ Surge arrester HAW569 Order code: HAW569-A11A for non-hazardous areas Order code: HAW569-B11A for Ex areas ATEX 2(1)G EEx ia IIC
Active barrier	▪ Active barrier RN221 for non-hazardous areas or as Ex version Order code: RN221-... see "Documentation"

9 Trouble-shooting

9.1 Trouble-shooting instructions

Always begin trouble-shooting with the following checklists if errors occur after commissioning or during measuring operation. The questions guide you to the cause of the error and the appropriate remedial action.

9.2 Error messages

Fault code	Cause	Action/cure	Mode[1)]
0	No error, warning	-	-
10	Hardware error (device defective)	Replace device	F
13	Reference measuring point defective	Replace device	F
15	EEprom defective	Replace device	F
16	A/D converter defective	Replace device	F
17	Ambient temperature limit overshot	Electronics possibly damaged by overshooting ambient temperature limits, return electronics to manufacturer for checking	0, F
19	Supply voltage too low	Check supply voltage; check connection wires for corrosion	F
50	Sensor cable open circuit	Check sensor	*
51	Sensor short-circuit	Check sensor	*
52	Sensor corrosion	Check sensor	*
53	Outside sensor range	Wrong sensor type for application	*
81	Alarm: measuring range undershoot	Measuring range poss. set too small	F
82	Alarm: measuring range overshoot	Measuring range poss. set too small	F
106	Warning: upload/download active	-	C
107	Warning: Output simulation active	Deactivate output simulation	C
201	Warning: Measured value too low	Change PV lower range value	M
202	Warning: measured value too large	Change PV upper range value	M
203	Warning: Ambient temperature limit overshot	Electronics possibly damaged by overshooting ambient temperature limits, return electronics to manufacturer for checking	0
206	Warning: Sensor corrosion	Check sensor	M
208	Reset device to factory default values	-	0
209	Device initialization	-	0
+1000	Additional errors active	Eliminate error displayed	

1) The modes have the following meaning: F: Fault, C: Device in service mode, M: Maintenanca required, S: Out of specification, *: depends on mode (F or M). See also section 6.4.2 Supported HART® commands.

Note!
If several errors are present, the error with the highest priority is output. Once this error is eliminated, the next error is output! An offset of 1000 indicates that more than one error is present.

Device behaviour in event of sensor error
In the event of a warning or error, the "Caution" symbol appears on the display and the error code is shown. If an error occurs, the bargraph also flashes on the display and only the error code is displayed and not the measured value. (See also Section 5.2).

9.2.1 Corrosion detection

Sensor connection cable corrosion can lead to false measured value readings. Therefore our unit offers the possibility to recognise any corrosion before the measured values are affected.

There are 2 different steps selectable dependent on the application requirements:
- off (warning output just before reaching the alarm set point. This allows for preventative maintenance/trouble-shooting to be done.)
- on (no warning, immediate alarm)

The following table describes how the device behaves when the resistance changes in a sensor connection line, depending on whether on or off is selected.

Note!
Corrosion detection only for RTD with 4-wire connection

RTD [1]	< ≈ 2 kΩ	2 kΩ ≈ < x< ≈ 3 kΩ	> ≈ 3 kΩ
off	—	WARNING	ALARM
on	—	ALARM	ALARM

1) Pt100 = 100 Ω at 0°C / Pt1000 = 1000 Ω at 0°C

TC	< ≈ 10 kΩ	10 kΩ ≈ < x< ≈ 15 kΩ	> ≈ 15 kΩ
off	—	WARNING [1]	ALARM
on	—	ALARM	ALARM

1) If the ambient temperature is very high, it is possible to have a measured error 3 times that of the specified value.

The sensor resistance can have an effect on the resistance data in the table. If all the sensor connection line resistances are increased simultaneously, the values described in the table are halved.
In corrosion detection, it is assumed this is a slow process with a continuous increase in resistance.

9.2.2 Monitoring the supply voltage

If the necessary supply voltage is undershot, the analog output value drops approx. 3 s ≤ 3.6 mA. Error code 19 appears on the display. Then the device attempts to output the normal analog output value again. If the supply voltage remains too low, the analog output value drops again to ≤ 3.6 mA. This prevents the device from constantly outputting an incorrect analog output value.

9.3 Application errors without messages

9.3.1 Application errors in general

Error pattern	Cause	Action/cure
No communication	No power supply via the 2-wire line	Connect connecting cables correctly in accordance with terminal plan (polarity)
	250 Ω communication resistance missing	See Section 4.3.1 "Connecting HART®"
	Supply voltage too low (<11 V or 8 V without display with jumper J3)	Check power supply
	Interface cable defective	Check interface cable
	Interface defective	Check interface of your PC
	Device defective	Replace device

9.3.2 Application errors for RTD connection

Pt100/Pt500/Pt1000/Ni100

Error pattern	Cause	Action/cure
Error current (≤ 3.6 mA or ≥ 21 mA)	Sensor defective	Check sensor
	Incorrect RTD connection	Connect connecting cables correctly (terminal plan)
	Incorrect 2-wire line connection	Connect connecting cables correctly in accordance with terminal plan (polarity)
	Faulty device programming (number of wires)	Change SENSOR CONNECTION device function
	Programming	Incorrect sensor type configured in the SENSOR TYPE device function; change to correct sensor type
	Device defective	Replace device

Error pattern	Cause	Action/cure
Measured value is incorrect/ inaccurate	Orientation of the sensor is incorrect	Install sensor properly
	Heat conducted by sensor	Observe face-to-face length of the sensor
	Faulty device programming (number of wires)	Change SENSOR CONNECTION device function
	Faulty device programming (scaling)	Change scaling
	Incorrect RTD configured	Change SENSOR TYPE device function
	Sensor connection (2-wire)	Check sensor connection
	Line resistance of sensor (2-wire) was not compensated	Compensate line resistance
	Offset incorrectly configured	Check offset

9.3.3 Application errors for TC connection

Error pattern	Cause	Action/cure
Error current (≤ 3.6 mA or ≥ 21 mA)	Sensor connected incorrectly	Connect sensor in accordance with terminal plan (polarity)
	Sensor defective	Check sensor
	Programming	Incorrect sensor type configured in the SENSOR TYPE device function; set correct thermocouple
	Device defective	Replace device

Error pattern	Cause	Action/cure
Measured value is incorrect/ inaccurate	Orientation of the sensor is incorrect	Install sensor properly
	Heat conducted by sensor	Observe face-to-face length of the sensor
	Faulty device programming (scaling)	Change scaling
	Wrong thermocouple type (TC) configured	Change SENSOR TYPE device function
	Incorrect comparison measurement point configured	See Section "Description of device functions"
	Offset incorrectly configured	Check offset
	Interference through thermo-wire welded in thermowell (interference voltage coupled in)	Use sensor that does not have a weld-on thermo-wire

9.4 Spare parts

If ordering spare parts, please specify the serial number of the unit!

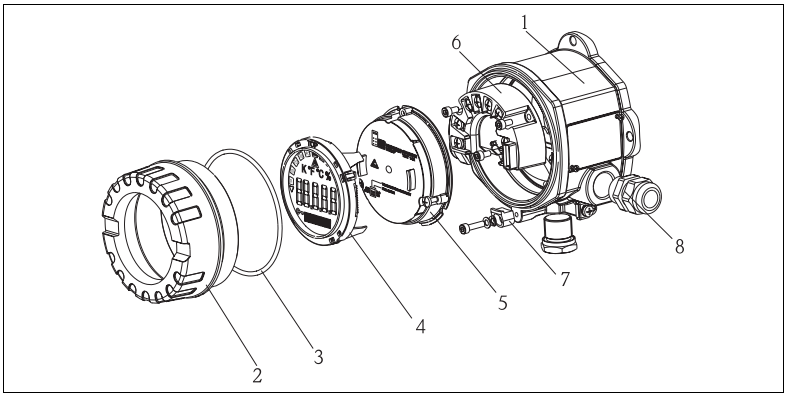

Electronics (Item no. 5)				
	Certificates			
	A	Non-hazardous area and Ex d		
	B	ATEX Ex ia, FM IS, CSA IS		
		Sensor input		
		A	1 Sensor input	
			Configuration	
			A	Standard
TMT142E-		**A**	**A**	**⇐ Order code**

Housing (Item no. 1)					
	Certificates				
	A	Non-hazardous area and Ex ia			
	B	ATEX Ex d			
		Material			
		A	Aluminum		
		B	Stainless steel 316L		
			Cable entry		
			1	3 x NPT1/2" + terminal block + 1 blanking plug	
			2	3 x M20x1.5 + terminal block + 1 blanking plug	
			5	M20x1.5 + M24x1.5 + terminal block + 1 blanking plug	
				Version	
				A	Standard
TMT142G-				**A**	**⇐ Order code**

Item No.	Order code	Spare parts
2	51004472	Housing cover TMT142 blind alu. Ex d ATEX Ex d, FM XP, CSA XP without seal
2	TMT142X-HA	Housing cover blind stainless steel 316L Ex d, ATEX Ex d, FM XP without seal, CSA XP without seal
2	51004920	Housing cover TMT142 blind alu. without seal
2	TMT142X-HB	Housing cover blind stainless steel 316L, without seal
2	51004450	Housing cover TMT142 display alu. Ex d ATEX Ex d, FM XP, CSA XP without seal
2	TMT142X-HC	Housing cover cpl. display, Ex d, stainless steel 316L, ATEX Ex d, FM XP, CSA XP, without seal
2	51004913	Housing cover TMT142 display alu. without seal
2	TMT142X-HD	Housing cover cpl. display, Ex d, stainless steel 316L, ATEX Ex d, FM XP, CSA XP, without seal
3	51004555	O-ring 88x3 NBR70 PTFE slide coating
4	TMT142X-DA	Display + mounting display TMT142
7	51004948	Cover clamp, spare part set TMT142 Screw, disk, spring washer
8	51004949	Cable gland M20x1.5 TMT14X
8	51006845	Cable gland NPT 1/2" D4-8.5, IP68
Without No.	51004387	Cable entry adapter M20x1.5 to NPT 1/2"
Without No.	51004454	Display mounting TMT142
Without No.	51004915	Adapter M20x1.5 external/ M24x1.5 internal VA
Without No.	51007995	Stainless steel mounting bracket for pipes 1.5" - 3.3" (see Section 3.3.2)

9.5 Return

To reuse later or in case of repair, the device must be packed in protective packaging, preferably the original packaging. Repairs must only be carried out by your supplier's service organisation or specially trained personnel.
Enclose a note describing the fault and the application when sending the unit in for repair.

9.6 Disposal

The device contains electronic components and must, therefore, be disposed of as electronic waste in the event of disposal. Please observe in particular the local waste disposal regulations of your country.

9.7 Software history

SW Revision
The software version in the Operating Instructions indicates the device release history: XX.YY.ZZ (example 01.02.01).

XX Change in the main version.
No longer compatible. Changes to device and Operating Instructions.

YY Change in the functionality and operation.
Compatible. Changes to Operating Instructions.

ZZ Debugging and internal modifications.
No changes to Operating Instructions.

SW Revision, date	Operation, documentation	Modifications
01.03.01, 03/2005	Compatible with: ▪ HART Communicator DXR375 (from OS1.6) ▪ Readwin® 2000 (as of version 1.17.0.0) ▪ AMS (as of version 5.0) ▪ PDM (as of version 5.1) ▪ Fieldcare version as of 2.01.00	
01.03.03, 12/2006	–	Internal SW modifications.

10 Technical data

10.0.1 Input

Measured variable	Temperature (temperature linear transmission behaviour), resistance and voltage
Measuring range	The unit records different measuring ranges depending on the sensor connection and input signals.

Input	Designation	Measuring range limits	Min. span
Resistance thermometer (RTD) To IEC 60751 (α = 0.00385)	Pt100 Pt200 Pt500 Pt1000	-200 to 850 °C (-328 to 1562 °F) -200 to 850 °C (-328 to 1562 °F) -200 to 250 °C (-328 to 482 °F) -200 to 250 °C (-238 to 482 °F)	10 K (18 °F) 10 K (18 °F) 10 K (18 °F) 10 K (18 °F)
To JIS C1604-81 (α = 0.003916)	Pt100	-200 to 649 °C (-328 to 1200 °F)	10 K (18 °F)
To DIN 43760 (α = 0.006180)	Ni100 Ni1000	-60 to 250 °C (-76 to 482 °F) -60 to 150 °C (-76 to 302 °F)	10 K (18 °F) 10 K (18 °F)
To Edison Copper Winding No.15 (α = 0.004274)	Cu10	-100 to 260 °C (-148 to 500 °F)	10 K (18 °F)
To SAMA (α = 0.003923)	Pt100	-100 to 700 °C (-148 to 1292 °F)	10 K (18 °F)
To Edison Curve (α = 0.006720)	Ni120	-70 to 270 °C (-94 to 518 °F)	10 K (18 °F)
To GOST (α = 0.003911)	Pt50 Pt100	-200 to 1100 °C (-328 to 2012 °F) -200 to 850 °C (-328 to 1562 °F)	10 K (18 °F) 10 K (18 °F)
To GOST (α = 0.004278)	Cu50, Cu100	-200 to 200 °C (-328 to 392 °F)	10 K (18 °F)
	Polynomial RTD Pt100 (Callendar - van Dusen)	-200 to 850 °C (-328 to 1562 °F) -200 to 850 °C (-328 to 1562 °F)	10 K (18 °F) 10 K (18 °F)
	▪ Type of connection: 2-wire, 3-wire or 4-wire connection ▪ With 2-wire circuit, compensation of wire resistance possible (0 to 30 Ω) ▪ With 3-wire and 4-wire connection, sensor wire resistance to max. 50 Ω per wire ▪ Sensor current: ≤ 0.3 mA		
Resistance transmitter	Resistance Ω	10 to 400 Ω 10 to 2000 Ω	10 Ω 100 Ω
Thermocouples (TC) To NIST monograph 175, IEC 584	Type B (PtRh30-PtRh6)[1)] Type E (NiCr-CuNi) Type J (Fe-CuNi) Type K (NiCr-Ni) Type N (NiCrSi-NiSi) Type R (PtRh13-Pt) Type S (PtRh10-Pt) Type T (Cu-CuNi)	0 to +1820 °C (32 to 3308 °F) -270 to +1000 °C (-454 to 1832 °F) -210 to +1200 °C (-346 to 2192 °F) -270 to +1372 °C (-454 to 2501 °F) -270 to +1300 °C (-454 to 2372 °F) -50 to +1768 °C (-58 to 3214 °F) -50 to +1768 °C (-58 to 3214 °F) -270 to +400 °C (-454 to 752 °F)	500 K (900 °F) 50 K (90 °F) 50 K (90 °F) 50 K (90 °F) 50 K (90 °F) 500 K (900 °F) 500 K (900 °F) 50 K (90 °F)
to ASTM E988	Type C (W5Re-W26Re) Type D (W3Re-W25Re)	0 to +2320 °C (32 to 4208 °F) 0 to +2495 °C (32 to 4523 °F)	500 K (900 °F) 500 K (900 °F)
to DIN 43710	Type L (Fe-CuNi) Type U (Cu-CuNi)	-200 to +900 °C (-328 to 1652 °F) -200 to +600 °C (-328 to 1112 °F)	50 K (90 °F) 50 K (90 °F)
	▪ Internal cold junction (Pt100); accuracy of cold junction: ± 1 K ▪ Max. sensor resistance 10 kΩ (if sensor resistance is greater than 10 kΩ, error message as per NAMUR NE 89)		
Voltage transmitter (mV)	Millivolt transmitter (mV)	-20 to 100 mV	5 mV

1) Increasing inaccuracy for temperatures < 300 °C (< 572 °F)

10.0.2 Output

Output signal	Analog 4 to 20 mA, 20 to 4 mA
Signal on alarm	■ Underranging: Linear drop to 3.8 mA ■ Overranging: Linear rise to 20.5 mA ■ Sensor break; sensor short-circuit (not for thermocouples TC): ≤ 3.6 mA or ≥ 21.0 mA (configurable 21.6 mA to 23 mA)
Load	Max. ($V_{power\ supply}$ – 11 V) / 0.022 A (current output)
Linearisation/transmission behaviour	Temperature linear, resistance linear, voltage linear
Filter	1st order digital filter: 0 to 60 s
Galvanic isolation	U = 2 kV AC (input/output)
Input current required	≤ 3.5 mA
Current limit	≤ 23 mA
Switch-on delay	4 s (during switch-on operation I_a= 4 mA)

10.0.3 Power supply

Supply voltage	U_b= 11 to 40 V (8 to 40 V without display), reverse polarity protection ⚠ Warning! Power must be fed to the device from an 11 to 40 VDC power supply in accordance with NEC Class 02 (low voltage/current) with short-circuit power limit to 8 A/150 VA.
Residual ripple	Perm. residual ripple U_{ss} ≤ 3 V at U_b ≥ 13.5 V, $f_{max.}$ = 1 kHz

10.0.4 Accuracy

Response time	1 s
Reference operating conditions	Calibration temperature: +25 °C ± 5 K; (+77 °F ± 9 °F)

Maximum measured error

	Designation	Accuracy		
		Digital		D/A[1)]
Resistance thermometer (RTD)	Cu100, Pt100, Ni100, Ni120 Pt500 Cu50, Pt50, Pt1000, Ni1000 Cu10, Pt200	0.2 K (0.36 °F) 0.6 K (1.08 °F) 0.4 K (0.72 °F) 2 K (3.6 °F)	0.1 K (0.18 °F)[2)] 0.3 K (0.54 °F)[2] 0.2 K (0.36 °F)[2] 1 K (1.8 °F)[2]	0.02% 0.02% 0.02% 0.02%

Thermocouples (TC)	K, J, T, E, L, U N, C, D S, B, R	typ. 0.5 K (0.9 °F) typ. 1 K (0.18 °F) typ. 2 K (3.6 °F)	typ. 0.25 K (0.45 °F)[2] typ. 0.5 K (0.9 °F)[2] typ. 1 K (1.8 °F)[2]	0.02% 0.02% 0.02%

1) % relates to the set span. Accuracy = digital + D/A accuracy

2) Only with the "Advanced Electronics" option

	Measuring range	**Accuracy**		
		Digital		D/A[1)]
Resistance transmitter (Ω)	10 to 400 Ω 10 to 2000 Ω	± 0.08 Ω ± 1.6 Ω	± 0.04 Ω[2)] ± 0.8 Ω[2]	0.02% 0.02%
Voltage transmitter (mV)	-20 to 100 mV	± 20 µV	± 10 µV[2]	0.02%

1) % relates to the set span. Accuracy = digital + D/A accuracy

2) Only with the "Advanced Electronics" option

Physical input range of the sensors	
10 to 400 Ω	Cu10, Cu50, Cu100, polynomial RTD, Pt50, Pt100, Ni100, Ni120
10 to 2000 Ω	Pt200, Pt500, Pt1000, Ni1000
-20 to 100 mV	Thermocouple type: C, D, E, J, K, L, N
-5 to 30 mV	Thermocouple type: B, R, S, T, U

Repeatability

0.03% of the physical input range (15 Bit)
Resolution A/D conversion: 18 Bit

With the "Advanced Electronics" option:
0.015% of the physical input range (16 Bit)

Influence of supply voltage

≤ ±0.005%/V deviation from 24 V, related to the full scale value

Long-term stability

≤ 0.1 K (0.18 °F)/year or ≤ 0.05%/year
Data under reference conditions. % relates to the set span. The larger value applies.

Influence of ambient temperature (temperature drift)

Total temperature drift = input temperature drift + output temperature drift

Effect on the accuracy when ambient temperature changes by 1 K (1.8 °F)		
Input 10 to 400 Ω	0.002% of measured value	0.001% of measured value[1)]
Input 10 to 2000 Ω	0.002% of measured value	0.001% of measured value[1]
Input -20 to 100 mV	typ. 0.002% of measured value (maximum value = 1.5 x typ.)	typ. 0.001% of measured value[1] (maximum value = 1.5 x typ.)
Input -5 to 30 mV	typ. 0.002% of measured value (maximum value = 1.5 x typ.)	typ. 0.001% of measured value[1] (maximum value = 1.5 x typ.)
Output 4 to 20 mA	typ. 0.002% of measured value (maximum value = 1.5 x typ.)	typ. 0.001% of span[1] (maximum value = 1.5 x typ.)

1) Only with the "Advanced Electronics" option

Typical sensor resistance change when process temperature changes by 1 K (1.8 °F):				
Cu10: 0.04 Ω	Pt200: 0.8 Ω	Ni120: 0.7 Ω	Cu50: 0.2 Ω	Pt50: 0.2 Ω
Cu100, Pt100: 0.4 Ω	Pt500: 2 Ω	Pt1000: 4 Ω	Ni100: 0.6 Ω	Ni1000: 6 Ω

Typical change in thermoelectric voltage when process temperature changes by 1 K (1.8 °F):					
B: 10 µV	C: 20 µV	D: 20 µV	E: 75 µV	J: 55 µV	K: 40 µV
L: 55 µV	N: 35 µV	R: 12 µV	S: 12 µV	T: 50 µV	U: 60 µV

Examples for calculating the accuracy:

- **Example 1 (without the "Advanced Electronics" option):**
  Input temperature drift $\Delta\vartheta$ = 10 K (18 °F), Pt100, span 0 to 100 °C (32 to 212 °F)
  Maximum process value: 100 °C (212 °F)
  Measured resistance value: 138.5 Ω (see IEC751)
  Typ. influence in Ω: (0.002% of 138.5 Ω) * 10 = 0.0277 Ω
  Conversion Ω to °C: 0.0277 Ω / 0.4 Ω/K = 0.07 K (0.013 °F)
- **Example 2 (without the "Advanced Electronics" option):**
  Input temperature drift $\Delta\vartheta$ = 10 K (18 °F), thermocouple type K with span 0 to 600 °C (32 to 1112 °F)
  Maximum process value: 600 °C (1112 °F)
  Measured thermoelectric voltage: 24905 µV (see IEC584)
  Typ. influence in µV: (0.002% of 24905 µV) * 10 = 5 µV
  Conversion Ω to °C: 5 µV / 40 µV/K = 0.12 K (0.216 °F)
- **Example 3 (without the "Advanced Electronics" option):**
  Output temperature drift $\Delta\vartheta$ = 10 K (18 °F), measuring range 0 to 100 °C (32 to 212 °F)
  Span: 100 K (180 °F)
  Typical influence: (0.002% of 100 K) * 10 = 0.02 K; (0.002% of 180 °F) * 10 = 0.036 °F
- **Example 4 (with the "Advanced Electronics" option):**
  Max. possible measured error $\Delta\vartheta$ = 10 K (18 °F), Pt100, measuring range 0 to 100 °C (32 to 212 °F)
  Measured error Pt100: 0.1 K (0.18 °F)
  Output measured error: 0.02 K (0.02% of 100 K); 0.04 °F (0.02% of 180 °F)
  Input temperature drift: 0.03 K (0.05 °F)
  Output temperature drift: 0.01 K * 1.5 = 0.015 K; (0.018 °F * 1.5 = 0.027 °F)
  Max. possible error (total of errors): 0.165 K (0.297 °F)

$\Delta\vartheta$ = deviation of ambient temperature from the reference operating condition

Total measuring point error = max. possible measured error + temperature sensor error

Influence of cold junction: Pt100 DIN IEC 751 Cl. B (internal cold junction with thermocouples TC)

10.0.5 Environment

Ambient temperature limits
- Without display: -40 to +85 °C (-40 °F to +185 °F)
- With display: -40 to +80 °C (-40 °F to +176 °F)

For use in hazardous areas, see Ex certificate

Note!
The display can react slowly for temperatures < -20 °C (< -4 °F). Readability of the display cannot be guaranteed at temperatures < -30 °C (-22 °F).

Storage temperature
- Without display: -40 to +100 °C (-40 °F to +212 °F)
- With display: -40 to +85 °C (-40 °F to +185 °F)

Operating height: Up to 2000 m above MSL

Climate class	As per EN 60 654-1, Class C
Degree of protection	IP 67, NEMA 4x
Shock and vibration resistance	3g / 2 to 150 Hz as per IEC 60 068-2-6
Electromagnetic compatibility (EMC)	Interference immunity and interference emission as per EN 61 326-1 (IEC 1326) and NAMUR NE 21 0.08...2 GHz 10 V/m; 1.4...2 GHz 30 V/m to EN 61000-4-3
Condensation	Permitted
Installation category	I
Pollution degree	2

10.0.6 Mechanical construction

Design, dimensions

Die cast aluminum housing for general purpose or as option stainless steel housing

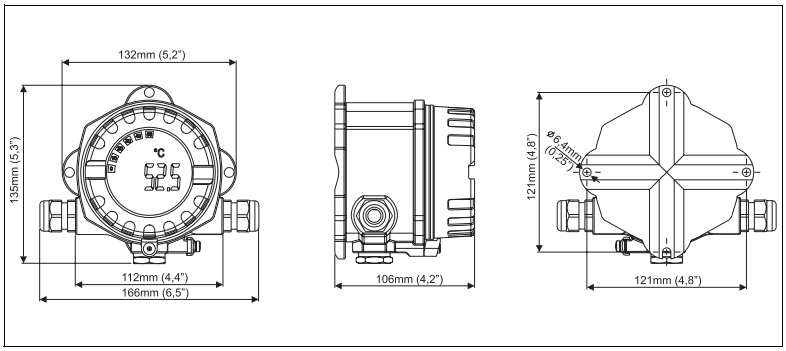

Fig. 13: Dimensions in mm (and inches in brackets)

- Display rotatable in 90 stages

Weight

- Approx. 1.6 kg (3.53 lb) (aluminium housing)
- Approx. 4.2 kg (9.26 lb) (stainless steel housing)

Material

Housing	Nameplate
Die-cast aluminum housing AlSi10Mg with powder coating on polyester basis	Aluminum AlMgl, anodized in black
Stainless steel 1.4435 (AISI 316L)	1.4301 (AISI 304)

Terminals

Cables / wires up to max. 2.5 mm^2 (AWG 13) plus ferrule

10.0.7 Certificates and approvals

CE mark	The device meets the statutory requirements of the EC directives. Endress+Hauser confirms successful testing of the device by affixing to it the CE mark.
Hazardous area approval	Information about currently available Ex versions (ATEX, FM, CSA, etc.) can be supplied by your E+H Sales Centre on request. All explosion protection data are given in a separate documentation which is available upon request.
UL	Recognized component to UL 3111-1
CSA GP	CSA General Purpose
Other standards and guidelines	■ IEC 60529: Degrees of protection through housing (IP code) ■ IEC 61010: Protection measures for electrical equipment for measurement, control, regulation and laboratory procedures ■ IEC 1326: Electromagnetic compatibility (EMC requirements) ■ NAMUR Association for Standards for Control and Regulation in the Chemical Industry

10.0.8 Documentation

❑FA brochure 'Temperature measuring technology' (FA006T/09/en)
❑Installation instructions, FieldCare configuration software (BA031S/04/a4)
❑Technical Information 'Fieldgate FXA520' (TI369F/00/en)
❑Supplementary Ex documentation:
ATEX II2G EEx d: XA048R/09/a3
ATEX II1/2D: XA049R/09/a3
ATEX II1G: XA050R/09/a3
ATEX EEx ia + EEx d: XA051R/09/a3
ATEX II3G: XA052R/09/a3
❑Technical Information 'Active barrier RN221' (TI073R/09/en)
❑Technical Information 'Surge arrester HAW569' (TI103R/09/en)

11 Appendix

11.1 The Callendar - van Dusen Method

It is a method to match sensor and transmitter to improve the accuracy of the measurement system. According to IEC 60751, the non-linearity of the platinum thermometer can be expressed as (1):

$$R_T = R_0[1 + AT + BT^2 + C(T - 100)T^3]$$

in which C is only applicable when T < 0 °C.

The coefficients A, B, and C for a standard sensor are stated in IEC 60751. If a standard sensor is not available or if a greater accuracy is required than can be obtained from the coefficients in the standard, the coefficients can be measured individually for each sensor. This can be done e.g. by determining the resistance value at a number of known temperatures and then determining the coefficients A, B, and C by regression analysis.

However, an alternative method for determination of these coefficients exists. This method is based on the measuring of 4 known temperatures:

- Measure R_0 at T_0 = 0 °C (the freezing point of water)
- Measure R_{100} at T_{100} = 100 °C (the boiling point of water)
- Measure R_h at T_h = a high temperature (e.g. the freezing point of zink, 419.53 °C)
- Measure R_l at T_l = a low temperature (e.g. the boiling point of oxygen, -182.96 °C)

Calculation of α
First the linear parameter α is determined as the normalized slope between 0 and 100 °C (2):

$$\alpha = \frac{R_{100} - R_0}{100 \bullet R_0}$$

If this rough approximation is enough, the resistance at other temperatures can be calculated as (3):

$$R_T = R_0 + R_0 \alpha \bullet T$$

and the temperature as a function of the resistance value as (4):

$$T = \frac{R_T - R_0}{R_0 \bullet \alpha}$$

Calculation of δ
Callendar has established a better approximation by introducing a term of the second order, δ , into the function. The calculation of δ is based on the disparity between the actual temperature, T_h, and the temperature calculated in (4) (5):

$$\delta = \frac{T_h - \frac{RT_h - R_0}{R_0 \bullet \alpha}}{\left(\frac{T_h}{100} - 1\right)\left(\frac{T_h}{100}\right)}$$

With the introduction of δ into the equation, the resistance value for positive temperatures can be calculated with great accuracy (6):

$$R_T = R_0 + R_0 \alpha (T + -\delta\left(\frac{T}{100} - 1\right)\left(\frac{T}{100}\right))$$

Calculation of β
At negative temperatures (6) will still give a small deviation. Van Dusen therefore introduced a term of the fourth order, β , which is only applicable for T < 0 °C. The calculation of β is based on the disparity between the actual temperature, t_l, and the temperature that would result from employing only α and δ (7):

$$\beta = \frac{T_l - \left[\frac{RT_l - R_0}{R_0 \bullet \alpha} + \delta\left(\frac{T_l}{100} - 1\right)\left(\frac{T_l}{100}\right)\right]}{\left(\frac{T_l}{100} - 1\right)\left(\frac{T_l}{100}\right)^3}$$

With the introduction of both Callendar's and van Dusen's constant, the resistance value can be calculated correctly for the entire temperature range, as long as one remembers to set β = 0 for T > 0 °C (8):

$$R_T = R_0 + R_0\alpha\left[T - \delta\left(\frac{T}{100} - 1\right)\left(\frac{T}{100}\right) - \beta\left(\frac{T}{100} - 1\right)\left(\frac{T}{100}\right)^3\right]$$

Conversion to A, B and C
Equation (8) is the necessary tool for accurate temperature determination. However, seeing that the IEC 751 coefficients A, B and C are more widely used, it would be natural to convert to these coefficients.
Equation (1) can be expanded to (9):

$$R_T = R_0(1 + AT + BT^2 - 100CT^3 + CT^4)$$

and by simple coefficient comparison with equation (8) the following can be determined (10):

$$A = \alpha + \left(\frac{\alpha \bullet \delta}{100}\right)$$

(11)

$$B = \frac{\alpha \bullet \delta}{100^2}$$

(12)

$$C = \frac{\alpha \bullet \beta}{100^4}$$

The device accepts the coefficients to be specified as α, β, δ and A, B, C.
Information on the coefficients can be requested from the sensor manufacturers in question.

11.2 Polynomial RTD

With "Polynomial RTD", the sensor is defined by a polynomial ($X4*x^4+X3*x^3+X2*x^2+X1*x^1+X0$) with 5 coefficients. The physical measuring range is 10 to 400 Ω.
The 5 coefficients of the polynomial are calculated using the PC configuration software Readwin® 2000. There are two different ways of determining the polynomial:

- **The sensor-matching-calibration**
  The deviation (compared to standard RTD) of the sensor or at the complete measuring point (transmitter with connected sensor, Measured = ΔT /°C or mA) is measured at different temperatures (sampling points). By using a "weight factor" it is possible to set special focus either on the given points (the deviation on the rest of the curve can be quite high) or on the trend compared to the reference linearization (The sampling points are only reference points of an e.g. aged sensor). These sampling points lead to a new revised linearization, which is transferred to the iTEMP® temperature transmitters.
- **The customer specific linearization**
  The linearization is made by measured resistance or current values over the target temperature range. These sampling points lead also to a new revised linearization, which is transferred to the iTEMP® temperature transmitters.

11.2.1 How to use with Readwin® 2000:

Note!
Please refer also to the software documentation BA137R/09/en to configure the device with the PC software ReadWin® 2000.

1. Select **POLYNOM RTD** in Choice-field "Sensor type".
2. Press button **LINEARIZATION** to open module SMC32.
3. Default setting is Sensor-matching-calibration which can be recognized by "ΔT/°C" in the groupbox "Measured". Alternative choice is "Ohm" or "mA" for customer specific linearization.
4. Default reference RTD linearization is Pt100. Check "Type of Sensor" if another RTD is required. With customer specific linearization it is not possible to select "Type of Sensor".
5. "Weighting" default is 50%. As described above 100% means full focus on the accuracy at the sampling points, 0% uses the sampling points as trend information for the complete curve.
6. The "sampling points" can be edited in the shown table, default points are the min and max temperature of the reference element. These values can be modified to a reduced range.
7. To see the results of the new linearization use menu **Calculate ➔ Calculate Curve** and/or **Calculate ➔ Show Coefficients** (Coefficients are shown in an extra form).
8. The red curve in the graph (scale on right) shows the deviation between calculated and reference curve. This graph easily shows the effect of changing the "weighting".
9. When files exist, data can also be loaded (**Data ➔ Load**). Files made with older versions (SW < 2.0) do only supply sampling points, the extra information ("Measured", "Type of Sensor") has to be edited after loading data.
10. Storing all data in files use **Data ➔ Save** or **Data ➔ Save as...**.
11. For using this functionality in the transmitter please press **OK** (data will be taken over in Readwin® 2000) and start to transmit to the device.

Index

Numerics
250 Ohm communication resistor 56

C
Callendar – van Dusen Method 86
CE mark (declaration of conformity) 52
Communicator DXR 275/375 60
Connection using other power supplies 56
Connection using the power supply RN 221N 56
Corrosion detection 67, 74

D
Declaration of conformity (CE mark) 52
Device behaviour in event of sensor error 74
Device Descriptions 62

E
Error messages 73

F
FieldCare 62
Function group
- DIAGNOSTICS 68
- DISPLAY 68
- IDENTIFICATION 69
- MEASURED VALUES 70
- OUTPUT 66
- SAFETY / MAINTENANCE 67
- Sensor 64
- SERVICE FUNCTIONS 69
- Standard set-up 64

H
Hardware setting
- Locking the configuration 59
- Setting the failsafe mode 59

Hazardous area 50

I
Internet address 62

M
Monitoring the supply voltage 74
Mounting
- Pipe 54
- Wall 54

Multidrop mode 66

P
Pipe mounting 54
Polynomial RTD 88

Q
Quick Setup 63

R
ReadWin® 2000 62

S
Sensor-matching-calibration 88
Supported HART® commands 70

T
Terminal layout 55

W
Wall mounted installation 54

Level Pressure Flow Temperature Liquid Analysis Registration Systems Components Services Solutions

Technical Information

iTEMP® HART® TMT142

Temperature transmitter for resistance thermometers, thermocouples, resistance transmitters and voltage transmitters, adjustable via HART®protocol

Application

- Temperature field transmitter with HART® protocol for converting various input signals to an analogue, scalable 4 to 20 mA output signal
- Universal input usable for:
  Resistance thermometer (RTD)
  Thermocouples (TC)
  Resistance transmitter (Ω)
  Voltage transmitter (mV)
- HART® protocol for operating the device on site using handheld terminal (DXR375) or remotely via the PC
- Optional: stainless steel housing for EEx d application
- Sensor monitoring:
  Failure conditioning, corrosion detection to NAMUR NE 89
- Failure conditioning in event of sensor break or sensor short-circuit, adjustable to NAMUR NE 43
- EMC to NAMUR NE 21, CE
- Approvals:
  ATEX (EEx ia, EEx d and dust ignition-proof), FM and CSA (IS, NI, XP and DIP)
- Galvanic isolation
- Output simulation
- Min./max. process value recorded

Your benefits

- Universally programmable with HART® protocol for various input signals
- Illuminated display, rotatable
- Operation, visualisation and maintenance with PC, e.g. using FieldCare or ReadWin® 2000 operating software
- Two-wire technology, analog output 4 to 20 mA
- Undervoltage detection
- Highly accurate in entire operating temperature range

TI00107R/09/en
71190515

Endress+Hauser
People for Process Automation

Function and system design

Measuring principle

Electronic recording, conversion and display of input signals in industrial temperature measurement.

Measuring system

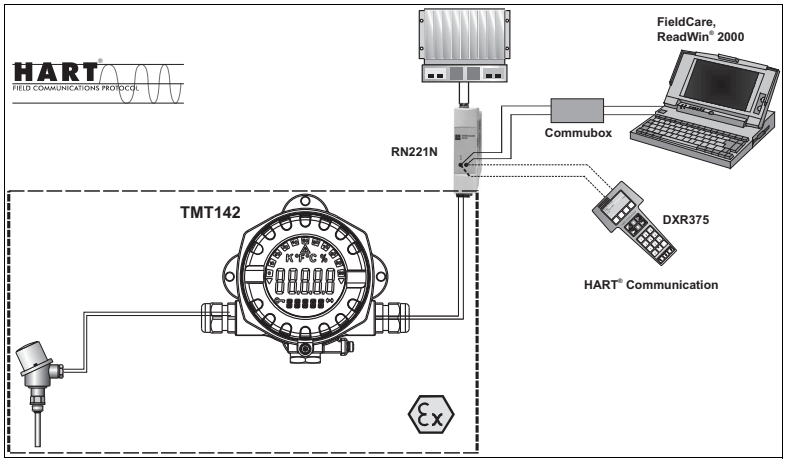

Example of an application of the field transmitter

The iTEMP® HART® temperature field transmitter TMT142 is a two-wire transmitter with an analogue output, an input for resistance thermometers and resistance transmitters in 2-wire, 3-wire or 4-wire connection, thermocouples and voltage transmitters. The LC display shows the current measured value digitally and as a bar graph with an indicator for limit value violation. The TMT142 can be operated via the HART® protocol using a handheld terminal (DXR375) or PC (FieldCare or ReadWin® 2000 operating software).

Corrosion detection
Sensor connection line corrosion can corrupt the measured value. For this reason, the device gives you the opportunity to detect corrosion for thermocouples and resistance thermometers with a 4-wire connection before measured value corruption takes place.

Input

Measured variable

Temperature (temperature linear transmission behaviour), resistance and voltage

Measuring range

The transmitter records different measuring ranges depending on the sensor connection and input signals (see 'Type of input').

Type of input

Input	Designation	Measuring range limits
Resistance thermometer (RTD) To IEC 60751 (α = 0.00385)	Pt100 Pt200 Pt500 Pt1000	-200 to 850 °C (-328 to 1562 °F) -200 to 850 °C (-328 to 1562 °F) -200 to 250 °C (-328 to 482 °F) -200 to 250 °C (-238 to 482 °F)
To JIS C1604-81 (α = 0.003916)	Pt100	-200 to 649 °C (-328 to 1200 °F)
To DIN 43760 (α = 0.006180)	Ni100 Ni1000	-60 to 250 °C (-76 to 482 °F) -60 to 150 °C (-76 to 302 °F)
To Edison Copper Winding No.15 (α = 0.004274)	Cu10	-100 to 260 °C (-148 to 500 °F)
To SAMA (α = 0.003923)	Pt100	-100 to 700 °C (-148 to 1292 °F)
To Edison Curve (α = 0.006720)	Ni120	-70 to 270 °C (-94 to 518 °F)
To GOST (α = 0.003911)	Pt50 Pt100	-200 to 1100 °C (-328 to 2012 °F) -200 to 850 °C (-328 to 1562 °F)
To GOST (α = 0.004280)	Cu50, Cu100	-200 to 200 °C (-328 to 392 °F)
	Polynomial RTD Pt100 (Callendar - van Dusen)	-200 to 850 °C (-328 to 1562 °F) -200 to 850 °C (-328 to 1562 °F)
	▪ Type of connection: 2-wire, 3-wire or 4-wire connection ▪ With 2-wire circuit, compensation of wire resistance possible (0 to 30 Ω) ▪ With 3-wire and 4-wire connection, sensor wire resistance to max. 50 Ω per wire ▪ Sensor current: ≤ 0.3 mA	
Resistance transmitter	Resistance Ω	10 to 400 Ω 10 to 2000 Ω
Thermocouples (TC) To NIST monograph 175, IEC 584	Type B (PtRh30-PtRh6)[1)] Type E (NiCr-CuNi) Type J (Fe-CuNi) Type K (NiCr-Ni) Type N (NiCrSi-NiSi) Type R (PtRh13-Pt) Type S (PtRh10-Pt) Type T (Cu-CuNi)	+40 to +1820 °C (+104 to 3308 °F) -270 to +1000 °C (-454 to 1832 °F) -210 to +1200 °C (-346 to 2192 °F) -270 to +1372 °C (-454 to 2501 °F) -270 to +1300 °C (-454 to 2372 °F) -50 to +1768 °C (-58 to 3214 °F) -50 to +1768 °C (-58 to 3214 °F) -260 to +400 °C (-436 to 752 °F)
to ASTM E988	Type C (W5Re-W26Re) Type D (W3Re-W25Re)	0 to +2315 °C (32 to 4199 °F) 0 to +2315 °C (32 to 4199 °F)
to DIN 43710	Type L (Fe-CuNi) Type U (Cu-CuNi)	-200 to +900 °C (-328 to 1652 °F) -200 to +600 °C (-328 to 1112 °F)
	▪ Internal cold junction (Pt100) ▪ External cold junction: configurable value -40 to +85 °C (-40 to +185 °F) ▪ Max. sensor resistance 10 kΩ (if sensor resistance is greater than 10 kΩ, error message as per NAMUR NE 89)	
Voltage transmitter (mV)	Millivolt transmitter (mV)	-20 to 100 mV

1) Increasing inaccuracy for temperatures < 300 °C (< 572 °F)

Output

Output signal

Analog output	4 to 20 mA, 20 to 4 mA (can be inverted)
Signal encoding	FSK ± 0.5 mA via current signal
Data transmission rate	1200 baud
Galvanic isolation	U = 2 kV AC (input/output)

Failure information

Failure information as per NAMUE NE43:
Failure information is created if the measuring information is missing or not valid. A complete list of all the errors occurring in the measuring system is created.

Underranging	Linear drop from 4.0 to 3.8 mA
Overranging	Linear increase from 20.0 to 20.5 mA
Failure, e.g. sensor breakage; sensor short circuit	≤ 3.6 mA ("low) or ≥ 21.6 mA ("high"), can be selected The "high" alarm setting can be set between 21.6 mA and 23 mA, thus providing the flexibility needed to meet the requirements of various control systems.

Load (HART®)

$R_{b\ max.} = (U_{b\ max.} - 11\ V) / 0.023\ A$ (current output)

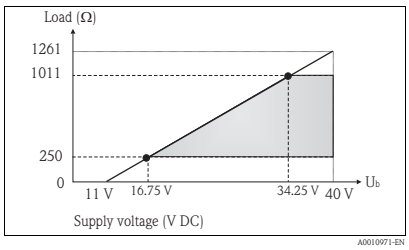

Linearisation/transmission behaviour

Temperature linear, resistance linear, voltage linear

Filter

1st order digital filter: 0 to 60 s

Current consumption

- 3.6 to 23 mA
- Minimum current consumption ≤ 3.5 mA
- Current limit ≤ 23 mA

Protocol-specific data

HART® Version	5
Write protection	Hardware setting for activating write protection
Device description files (DD)	Information and files are available free of charge at: www.endress.com www.hartcomm.org
Load (communication resistor)	min. 250 Ω

Switch-on delay

4 s (during switch-on operation I_a ≤ 4 mA)

Power supply

Electrical connection

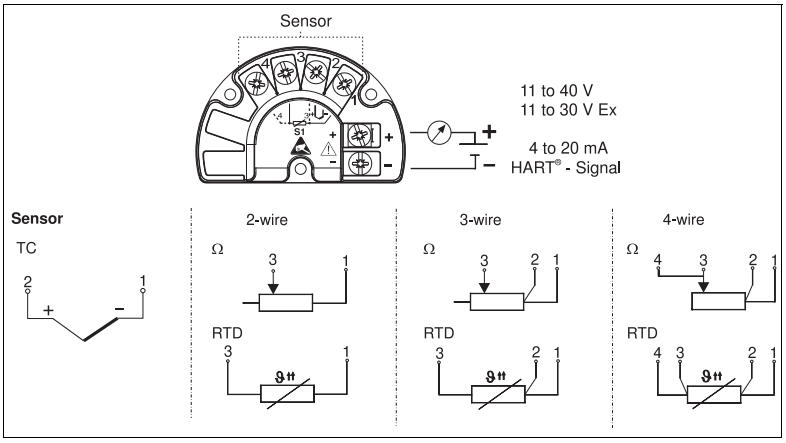

Supply voltage

U_b= 11 to 40 V (8 to 40 V without display), reverse polarity protection

Power must be fed to the device from an 11 to 40 VDC power supply in accordance with NEC Class 02 (low voltage/current) with short-circuit power limit to 8 A/150 VA.

Cable entry

Version	Type
Thread	3x thread NPT½"
	3x thread M20x1,5
	3x thread G½"
	1x thread M24x1.5 and 2x M20x1.5
Cable gland	2x cable gland M20x1.5

Residual ripple

Perm. residual ripple $U_{ss} \leq 3$ V at $U_b \geq 13.5$ V, $f_{max.} = 1$ kHz

Accuracy

Response time

1 s

Reference operating conditions

- Calibration temperature: +25 °C ± 5 K; (+77 °F ± 9 °F)
- Supply voltage: 24 V DC
- 4-wire circuit for resistance adjustment

Maximum measured error

	Designation	Accuracy		
		Digital		D/A[1]
Resistance thermometer (RTD)	Cu100, Pt100, Ni100, Ni120 Pt500 Cu50, Pt50, Pt1000, Ni1000 Cu10, Pt200	0.2 K (0.36 °F) 0.6 K (1.08 °F) 0.4 K (0.72 °F) 2 K (3.6 °F)	0.1 K (0.18 °F)[2] 0.3 K (0.54 °F)[2] 0.2 K (0.36 °F)[2] 1 K (1.8 °F)[2]	0.02% 0.02% 0.02% 0.02%
Thermocouples (TC)	K, J, T, E, L, U N, C, D S, B, R	typ. 0.5 K (0.9 °F) typ. 1 K (0.18 °F) typ. 2 K (3.6 °F)	typ. 0.25 K (0.45 °F)[2] typ. 0.5 K (0.9 °F)[2] typ. 1 K (1.8 °F)[2]	0.02% 0.02% 0.02%

1) % relates to the set span. Accuracy = digital + D/A accuracy

2) Only with the "Advanced Electronics" option

	Measuring range	Accuracy		
		Digital		D/A[1]
Resistance transmitter (Ω)	10 to 400 Ω 10 to 2000 Ω	± 0.08 Ω ± 1.6 Ω	± 0.04 Ω[2] ± 0.8 Ω[2]	0.02% 0.02%
Voltage transmitter (mV)	-20 to 100 mV	± 20 µV	± 10 µV[2]	0.02%

1) % relates to the set span. Accuracy = digital + D/A accuracy

2) Only with the "Advanced Electronics" option

Physical input range of the sensors	
10 to 400 Ω	Cu10, Cu50, Cu100, polynomial RTD, Pt50, Pt100, Ni100, Ni120
10 to 2000 Ω	Pt200, Pt500, Pt1000, Ni1000
-20 to 100 mV	Thermocouple type: C, D, E, J, K, L, N
-5 to 30 mV	Thermocouple type: B, R, S, T, U

Repeatability

0.03% of the physical input range (15 Bit)
Resolution A/D conversion: 18 Bit

With the "Advanced Electronics" option:
0.015% of the physical input range (16 Bit)

Influence of supply voltage

≤ ±0.005%/V deviation from 24 V, related to the full scale value

Long-term stability

≤ 0.1 K (0.18 °F)/year or ≤ 0.05%/year
Data under reference conditions. % relates to the set span. The larger value applies.

Influence of ambient temperature (temperature drift)

Total temperature drift = input temperature drift + output temperature drift

Effect on the accuracy when ambient temperature changes by 1 K (1.8 °F)		
Input 10 to 400 Ω	0.002% of measured value	0.001% of measured value[1)]
Input 10 to 2000 Ω	0.002% of measured value	0.001% of measured value[1]
Input -20 to 100 mV	typ. 0.002% of measured value (maximum value = 1.5 x typ.)	typ. 0.001% of measured value[1] (maximum value = 1.5 x typ.)
Input -5 to 30 mV	typ. 0.002% of measured value (maximum value = 1.5 x typ.)	typ. 0.001% of measured value[1] (maximum value = 1.5 x typ.)
Output 4 to 20 mA	typ. 0.002% of measured value (maximum value = 1.5 x typ.)	typ. 0.001% of span[1] (maximum value = 1.5 x typ.)

1) Only with the "Advanced Electronics" option

Typical sensitivity of resistance thermometers:		
Pt: 0.00385 * $R_{nominal}$/K	Cu: 0.0043 * $R_{nominal}$/K	Ni: 0.00617 * $R_{nominal}$/K

Example Pt100: 0.00385 x 100 Ω/K = 0.385 Ω/K

Typical sensitivity of thermocouples:					
B: 10 µV/K at 1000 °C (1832 °F)	C: 20 µV/K at 1000 °C (1832 °F)	D: 20 µV/K at 1000 °C (1832 °F)	E: 75 µV/K at 500 °C (932 °F)	J: 55 µV/K at 500 °C (932 °F)	K: 40 µV/K at 500 °C (932 °F)
L: 55 µV/K at 500 °C (932 °F)	N: 35 µV/K at 500 °C (932 °F)	R: 12 µV/K at 1000 °C (1832 °F)	S: 12 µV/K at 1000 °C (1832 °F)	T: 50 µV/K at 100 °C (212 °F)	U: 60 µV/K at 500 °C (932 °F)

Example for calculating measured error for ambient temperature drift:

Input temperature drift Δϑ = 10 K (18 °F), Pt100, measuring range 0 to 100 °C (32 to 212 °F)
Maximum process temperature: 100 °C (212 °F)
Measured resistance value: 138.5 Ω (IEC 60751) at maximum process temperature

Typical temperature drift in Ω: (0.001% of 138.5 Ω) * 10 = 0.01385 Ω
Conversion to Kelvin: 0.01385 Ω / 0.385 Ω/K = 0.04 K (0.054 °F)

Influence of cold junction

Pt100 DIN IEC 751 Cl. B (internal cold junction with thermocouples TC)

Installation

Installation instructions

Mounting location
Direct mounting on the temperature sensor or indirect mounting using mounting bracket (see 'Accessories').

Environment

Ambient temperature limits	▪ Without display: –40 to +85 °C (–40 °F to +185 °F) ▪ With display: –40 to +70 °C (–40 °F to +158 °F) For use in hazardous areas, see Ex certificate The display can react slowly for temperatures < –20 °C (< –4 °F). Readability of the display cannot be guaranteed at temperatures < –30 °C (–22 °F).
Storage temperature	▪ Without display: –40 to +100 °C (–40 °F to +212 °F) ▪ With display: –40 to +85 °C (–40 °F to +185 °F)
Altitude	Up to 2000 m (6560 ft) above sea level according to IEC 61010-1, CSA 1010.1-92
Climate class	As per EN 60 654-1, Class C
Degree of protection	IP 67, NEMA 4x
Shock and vibration resistance	3g / 2 to 150 Hz as per IEC 60 068-2-6
Electromagnetic compatibility (EMC)	Interference immunity and interference emission as per EN 61 326-1 (IEC 1326) and NAMUR NE 21 0.08...2 GHz 10 V/m; 1.4...2 GHz 30 V/m to EN 61000-4-3
Condensation	Permitted
Installation category	I
Pollution degree	2

Mechanical construction

Design, dimensions

Die cast aluminum housing for general purpose or as option stainless steel housing

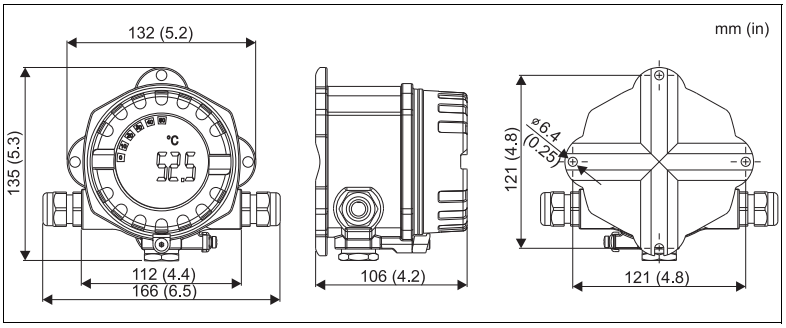

Dimensions in mm (and inches in brackets)

Display rotatable in 90°-stages

Weight

- Approx. 1.6 kg (3.53 lb) (aluminium housing)
- Approx. 4.2 kg (9.26 lb) (stainless steel housing)

Material

Housing	Nameplate
Die-cast aluminum housing AlSi10Mg/AlSi12 with powder coating on polyester basis	Aluminum AlMgl, anodized in black
Stainless steel 1.4435 (AISI 316L)	1.4404 (AISI 316L)

Terminals

Cables / wires up to max. 2.5 mm^2 (AWG 13) plus ferrule

Human interface

Display elements

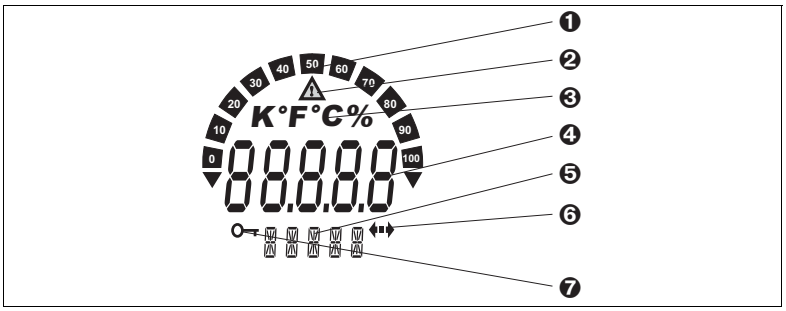

LC display of the field transmitter (illuminated, can be rotated in 90 stages)

1: Bar graph display in 0 % stages with indicators for overranging/underranging
2: 'Caution' display
3: Unit display K, °F, °C or %
4: Measured value display (digit height 20.5 mm / 0.81 ")
5: Status and information display
6: 'Communication' display
7: 'Programming disabled' display

Operating elements	No operating elements are present directly on the display. The device parameters of the field transmitter are configured using the DXR375 handheld terminal or a PC with Commubox FXA191 and operating software (e.g. FieldCare or ReadWin® 2000).
Remote operation	**Configuration** See 'Operating elements' **Interface** HART® communication via transmitter power supply (e.g. RN221N; see 'Measuring system'). **Configurable device parameters (selection)** Sensor type and type of connection, engineering units (°C/°F), measuring ranges, internal/external cold junction, compensation of wire resistance with 2-wire connection, failure mode, output signal (4 to 20/20 to 4 mA), digital filter (damping), offset, TAG+descriptor (8+16 characters), output simulation, customized linearisation, recording of min./max. process value, analog output: channel 1 (C1)

Certificates and approvals

CE mark	The device meets the statutory requirements of the EC directives. Endress+Hauser confirms successful testing of the device by affixing to it the CE mark.
Ex approval	Information about currently available Ex versions (ATEX, FM, CSA, etc.) can be supplied by your E+H Sales Centre on request. All explosion protection data are given in a separate documentation which is available upon request.
UL	Recognized component to UL 3111-1
Other standards and guidelines	■ IEC 60529: Degrees of protection through housing (IP code) ■ IEC 61010: Protection measures for electrical equipment for measurement, control, regulation and laboratory procedures ■ IEC 1326: Electromagnetic compatibility (EMC requirements) ■ NAMUR Association for Standards for Control and Regulation in the Chemical Industry
CSA GP	CSA General Purpose

Ordering information

Detailed ordering information is available from the following sources:
- In the **Product Configurator** on the Endress+Hauser website:
  www.endress.com → Select country → Instruments → Select device → Product page function: Configure this product
- From your Endress+Hauser Sales Center:
  www.endress.com/worldwide

Product Configurator - the tool for individual product configuration:
- Up-to-the-minute configuration data
- Depending on the device: Direct input of measuring point-specific information such as measuring range or operating language
- Automatic verification of exclusion criteria
- Automatic creation of the order code and its breakdown in PDF or Excel output format
- Ability to order directly in the Endress+Hauser Online Shop

Accessories

Device-specific accessories

Type	Description	Order Code
Mounting bracket	▪ Mounting bracket, stainless steel pipe 1.5-3", 316L	51007995
Cable gland	▪ Cable gland M20x1.5 ▪ Cable gland NPT 1/2" D4-8.5, IP68 ▪ Cable entry adapter M20x1.5 to NPT 1/2"	51004949 51006845 51004387
Blanks (blind)	▪ M20x1.5 EEx-d/XP ▪ G ½" EEx-d/XP ▪ NPT ½" Aluminum	51004489 51004916 51004490
Overvoltage protection	▪ Surge arrester HAW569 Order code: HAW569-A11A for non-hazardous areas Order code: HAW569-B11A for Ex areas ATEX 2(1)G EEx ia IIC	
Active barrier	▪ Active barrier RN221 for non-hazardous areas or as Ex version Order code: RN221-... see "Documentation"	

Communication-specific accessories

Accessories	Description
Commubox FXA195 HART	For intrinsically safe HART communication with FieldCare via the USB interface. For details, see "Technical Information" TI404F/00
Commubox FXA291	Connects Endress+Hauser field devices with a CDI interface (= Endress+Hauser Common Data Interface) and the USB port of a computer or laptop. For details, see "Technical Information" TI405C/07
WirelessHART adapter	Is used for the wireless connection of field devices. The WirelessHART adapter can be easily integrated into field devices and existing infrastructures, offers data protection and transmission safety and can be operated in parallel with other wireless networks with minimum cabling complexity. For details, see Operating Instructions BA061S/04
Fieldgate FXA320	Gateway for the remote monitoring of connected 4-20 mA measuring devices via a Web browser. For details, see "Technical Information" TI025S/04
Fieldgate FXA520	Gateway for the remote diagnostics and remote configuration of connected HART measuring devices via a Web browser. For details, see "Technical Information" TI025S/04

System components and Recorders

Accessory	Description
Graphic Data Manager Memograph M	The Memograph M graphic data manager provides information on all the relevant process variables. Measured values are recorded correctly, limit values are monitored and measuring points analyzed. The data are stored in the 256 MB internal memory and also on a SD card or USB stick. For details, see "Technical Information" TI133R/09
Multi channel recorder Ecograph T	Multi-channel data recording system with LC color grafic display (120 mm / 4.7" screen size), galvanically isolated universal inputs (U, I, TC, RTD), digital input, transmitter power supply, limit relay, communication interfaces (USB, Ethernet, RS232/485), internal Flash memory and CompactFlash card. For details, see "Technical Information" TI115R/09
RN221N	Active barrier with power supply for safe separation of 4-20 mA standard signal circuits. Offers bidirectional HART transmission. For details, see "Technical Information" TI073R/09
RNS221	Supply unit for powering two 2-wire measuring devices solely in the non-Ex area. Bidirectional communication is possible via the HART communication jacks. For details, see "Technical Information" TI081R/09
RB223	One or two-channel, loop-powered barrier for the safe separation of 4 to 20 mA standard signal circuits. Bidirectional communication is possible via the HART communication jacks. For details, see "Technical Information" TI132R/09
RIA14, RIA16	Loop powered field indicator for 4 to 20 mA current loops, RIA14 with explosion proof enclosure. For details, see "Technical Informations" TI143R/09 and TI144R/09
RIA15	Process display, digital loop powered display for 4 to 20 mA current loops. For details, see "Technical Information" TI1040K/09

Documentation

- Field of activities brochure 'Temperature measurement' (FA006T/09/en)
- Installation instructions, FieldCare configuration software (BA031S/04/a4)
- Supplementary Ex documentation:
  ATEX II2G EEx d: XA048R/09/a3
  ATEX II1/2D: XA049R/09/a3
  ATEX II1G: XA050R/09/a3
  ATEX II3G: XA052R/09/a3
  ATEX II1/2GD: XA066R/09/a3
- Technical Information 'Surge arrester HAW569' (TI1013K/09)

Instruments International

Endress+Hauser
Instruments International AG
Kaegenstrasse 2
4153 Reinach
Switzerland

Tel.+41 61 715 81 00
Fax+41 61 715 25 00
www.endress.com
info@ii.endress.com

Endress+Hauser
People for Process Automation

TI00107R/09/en/13.12
71190515
FM9.0

TI 00261T/02/EN/13.19
71443101

Products Solutions Services

Technical Information
Thermowell
Omnigrad M TW10

Pipe thermowell
Threaded process connection

Application
Omnigrad M TW 10 thermowells are designed for the use in the fine chemicals industry but can also be used for generic applications.
Thanks to its modular configuration, defined in standard DIN 43772 (form 2G/3G), the TW 10 thermowell is suitable for almost all industrial processes.

Features and benefits
- SS 316L/1.4404, SS 316Ti/1.4571 and Hastelloy C for the "wetted" parts
- The common threaded process connections are supplied as standard; others are available on request
- Customized immersion length
- Surface finishing Ra < 0.8 µm
- Tip of the thermowell with a reduced diameter or tapered for a faster response time
- Material certification (3.1.B)
- Pressure test
- Test with penetrant liquids on welds

Endress+Hauser
People for Process Automation

Areas of application

- Fine chemicals industry
- Light energy industry
- Food industry
- General industrial services

Function and system design

Equipment architecture

The design of the thermowell is based on standard DIN 43772 and can therefore guarantee a good level of resistance to the most typical and common industrial processes.
The thermowell is made from a tube with a diameter of 9, 11 or 12 mm. The final part can be straight, tapered (i.e. with a gradual reduction of the stem achieved thanks to a swaging procedure), or reduced (stepped).
The Omnigrad M TW 10 thermowell can be fitted on the plant (tube or tank) using a threaded connection, which can be chosen from the most common models (see section "Structure of components").

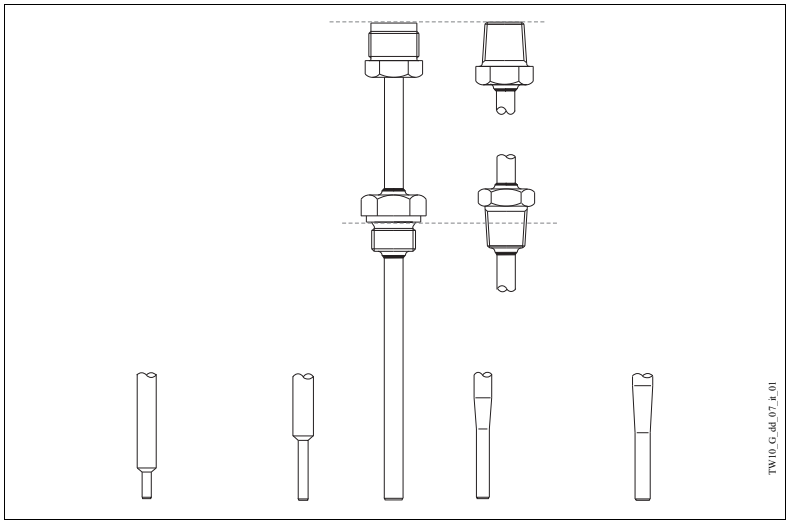

Fig. 1: TW 10 with several types of process connections and end parts of the thermowell

Material

Wetted parts in SS 316L/1.4404, SS 316Ti/1.4571 or Hastelloy C.

Weight

From 0.5 to 2 Kg for standard options.

Performance

Operating conditions

Process temperature

- 316L/1.4404 -200 ÷ 600°C
- 316Ti/1.4571 -200 ÷ 800°C
- Hastelloy C -200 ÷ 1000°C

Maximum process pressure

The pressure values to which the thermowell can be subjected at varying temperatures are illustrated in the drawings of figures 2 and 3. A possible limitation can originate from process connections. For tubes with a diameter of 9 mm, with a limited flow rate, the thermowell can tolerate the following maximum pressures:

- 50 bar at 20°C
- 33 bar at 250°C
- 24 bar at 400°C.

Maximum flow velocity

The highest flow velocity tolerated by the thermowell decreases as the length of the well/probe, exposed to the stream of the fluid, increases. Some information is provided in the drawing of figures 2 and 3.

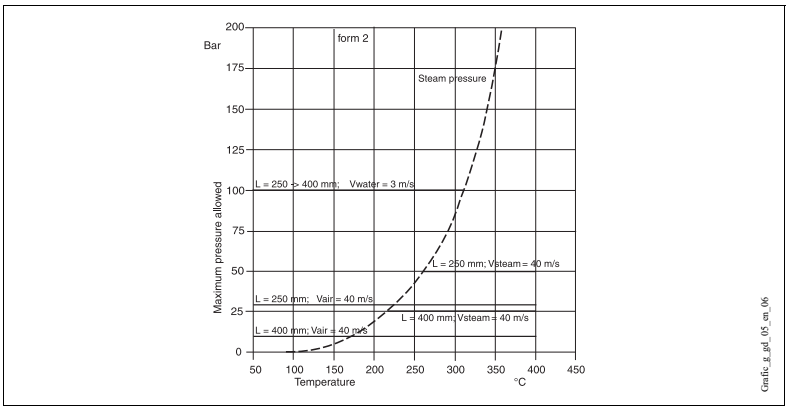

Fig. 2: Pressure/temperature drawing for thermowell with a straight pipe Ø 11 mm in SS 316Ti/1.4571

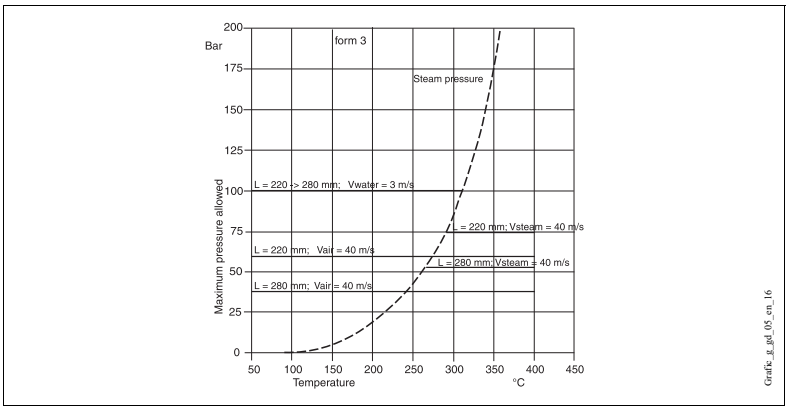

Fig. 3: Pressure/temperature drawing for thermowell with tapered pipe Ø12 mm in SS 316Ti/1.4571

Installation

The Omnigrad M TW 10 thermowells can be mounted on the wall of pipes or vessels or other plant parts that may require them.
The interface components for the process connection and the related gaskets are not normally provided with the sensors and must be purchased by the customer.
Immersion length may influence the accuracy of the measurement. If the immersion length is too low, an error may be generated in the temperature recorded due to the lower temperature of the process fluid near to the walls and heat transfer, which takes place through the sensor stem. The incidence of such an error can be relevant if there is a large difference between the process temperature and ambient temperature. In order to avoid this source of inaccuracy, the thermowell should have a small diameter and the immersion length (L) should be, if possible, at least 80÷100 mm.
For pipes with a small section, it is necessary to make sure that the tip of the probe reaches or slightly exceeds, if possible, the axis line of the duct (see fig. 4A-4B). Insulation of the outer part of the sensor reduces the effect produced by a low immersion length. Another solution may be a tilted installation (see fig. 4C-4D). For use in the food industry, it is best to follow the rule h <= d/2.

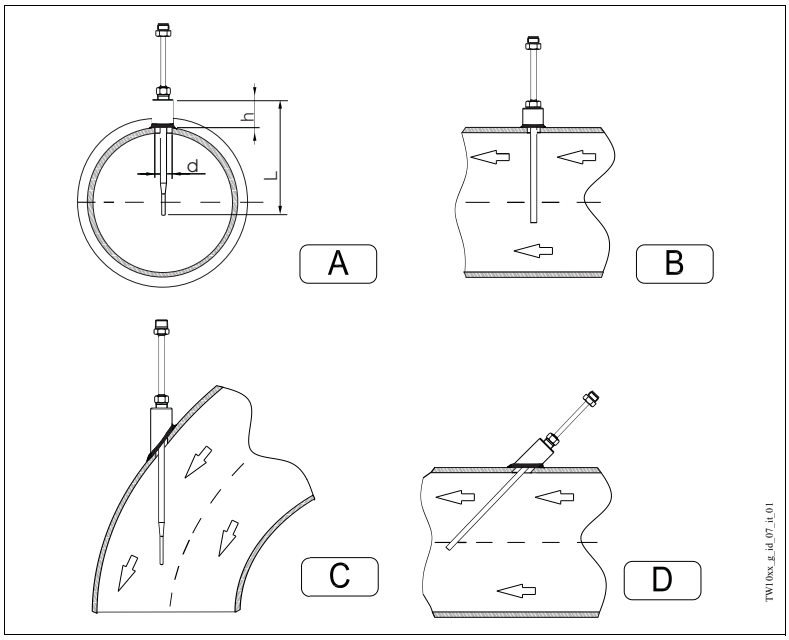

Fig. 4: Installation examples

With regard to corrosion, the base material of the wetted parts (SS 316L/1.4404, SS 316Ti/1.4571, Hastelloy C) can tolerate the common corrosive media right up to even the highest temperatures. For further information on specific applications, please contact the E+H Customer Service.

System components

Extension neck

The extension neck is the part between the process connection and the housing. It is normally made of a tube with the same dimensional and physical characteristics (diameter and material) of the tube under the process connection.
The standard lengths of the neck are 80 or 145 mm, according to the selected option.

In accordance with standard DIN 43772, in the case of a thermowell with a diameter of 12 mm and a tapered tip (form 3G), the extension neck will be respectively 87 or 147 mm.

The M24x1.5 connection, situated in the upper part of the neck, enables to orient the head of the sensor. This option is not available with 1/2" NPT fittings.

Process connection

Standard connections are available in the following types:
- M20x1.5
- G 1/2" and G 1" DIN 43772 (DIN 3852 form A)
- G 1/2", G 3/4" and G 1" BSP cylindrical
- 1/2" and 3/4" NPT.

Other versions may be supplied on request.
Figure 5 shows the engaging lengths.

Process connections		Thread	mm
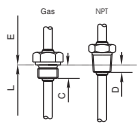	C	G 1/2" DIN	15
		G 1" DIN	18
		G 1/2" BSP	15
		G 3/4" BSP	15
		G 1" BSP	20
		M 20X1.5	14
	D	1/2" NPT	8
		3/4" NPT	8.5

Fig. 5: Engaging lengths

The immersion length of the part of tube in contact with the process fluid is available in the dimensions indicated in standard DIN 43772 and in the most commonly used ones. Immersion length can also be customised within a range of values (see "Sales structure" at the end of this document).
The surface finish (Ra) is 0.8 µm. The different types of tips (reduced or tapered) are described in figure 6.

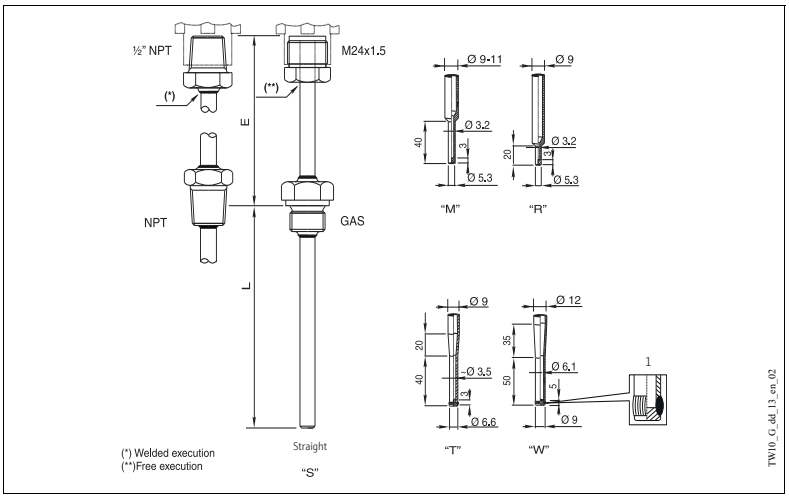

Fig. 6: Functional components
1 Welded tip, weld quality according to EN ISO 5817 - quality class B

Certificates & approvals

PED approval	The Pressure Equipment Directive (97/23/CE) is respected. As paragraph 2.1 of article 1 is not applicable to this kind of instruments, the marking 4 is not mandatory for TW 10 models used for generic applications.
Material certification	The material certificate 3.1.B (compliant standard EN 10204) can be directly selected from the sale structure of the product and refers to the parts of the thermowell in contact with the process fluid. Other types of certificates related to materials can be requested separately. The "short form" certificate includes a simplified declaration, with no enclosures of documents, related to the materials used in the construction of the single thermowell and guarantees the traceability of the materials through the identification number of the thermometer. The data related to the origin of the materials can subsequently be requested by the customer if necessary.
Test on the thermowell	The pressure tests are carried out at ambient temperature in order to verify the resistance of the thermowell to the specifications indicated by standard DIN 43772. For thermowells that do not comply with this standard (with a reduced tip, a tapered tip on a 9 mm tube, special dimensions ....), the pressure of the corresponding straight tube with similar dimensions is verified. Tests at different pressures can be carried out on request. The liquid (dye) penetrant test verifies the absence of crevices on the weldings of the thermowell.

Ordering information

Detailed ordering information is available from the following sources:
- In the Product Configurator on the Endress+Hauser website:
  www.endress.com → Select country → Instruments → Select device → Product page function: Configure this product
- From your Endress+Hauser Sales Center:
  www.endress.com/worldwide

Product Configurator - the tool for individual product configuration:
- Up-to-the-minute configuration data
- Depending on the device: Direct input of measuring point-specific information such as measuring range or operating language
- Automatic verification of exclusion criteria
- Automatic creation of the order code and its breakdown in PDF or Excel output format
- Ability to order directly in the Endress+Hauser Online Shop

www.addresses.endress.com

Endress+Hauser
People for Process Automation

A.11.2 EC type-examination certificate

CERTIFICATE

EU-Type Examination

(1) EU-Type Examination

(2) **Equipment or protective systems intended for use in potentially explosive atmospheres - Directive 2014/34/EU**

(3) EU-Type Examination Certificate Number: **DEKRA 17ATEX0048 X** Issue Number: **1**

(4) Product: **Temperature Transmitter, Type iTEMP TMT142 and Type iTEMP TMT162**

(5) Manufacturer: **Endress+Hauser Wetzer GmbH+Co. KG**

(6) Address: **Obere Wank 1, 87484 Nesselwang, Germany**

(7) This product and any acceptable variation thereto is specified in the schedule to this certificate and the documents therein referred to.

(8) DEKRA Certification B.V., Notified Body number 0344 in accordance with Article 17 of Directive 2014/34/EU of the European Parliament and of the Council, dated 26 February 2014, certifies that this product has been found to comply with the Essential Health and Safety Requirements relating to the design and construction of products intended for use in potentially explosive atmospheres given in Annex II to the Directive.

The examination and test results are recorded in confidential test report number NL/KEM/ExTR06.0038/06.

(9) Compliance with the Essential Health and Safety Requirements has been assured by compliance with:

EN IEC 60079-0 : 2018 **EN 60079-11 : 2012**

except in respect of those requirements listed at item 18 of the Schedule.

(10) If the sign "X" is placed after the certificate number, it indicates that the product is subject to the Specific Conditions of Use specified in the schedule to this certificate.

(11) This EU-Type Examination Certificate relates only to the design and construction of the specified product. Further requirements of the Directive apply to the manufacturing process and supply of this product. These are not covered by this certificate.

(12) The marking of the product shall include the following:

II 1 G Ex ia IIC/IIB/IIA T6...T4 Ga or
II 2 D Ex ia IIIC/IIIB/IIIA T85 °C...T110 °C Db

Date of certification: 27 September 2021

DEKRA Certification B.V.

R. Schuller
Certification Manager

Page 1/2

© Integral publication of this certificate and adjoining reports is allowed. This Certificate may only be reproduced in its entirety and without any change.

DEKRA Certification B.V. Meander 1051, 6825 MJ Arnhem P.O. Box 5185, 6802 ED Arnhem The Netherlands
T +31 88 96 83000 F +31 88 96 83100 www.dekra-product-safety.com Registered Arnhem 09085396

DEKRA

(13) **SCHEDULE**

(14) **to EU-Type Examination Certificate DEKRA 17ATEX0048X** Issue No. **1**

(15) **Description**

Temperature Transmitters iTEMP Type TMT142 and iTEMP Type TMT162 consist of an enclosure, made of aluminium or stainless steel, containing electronic circuits, terminals and optionally a display. The transmitters are used to convert the measurement signal of an external or an integral temperature sensor into an output signal.
Depending on the version, the transmitter provides a 4 - 20 mA current output signal with HART communication or is connected to a fieldbus (Profibus PA or Foundation Fieldbus) (iTEMP Type TMT162 only).

For more information regarding Thermal data, Electrical data and Type designation see Annex 1 to Report No. NL/KEM/ExTR06.0038/06.

Installation instructions

The instructions provided with the product shall be followed in detail to assure safe operation.

(16) **Report Number**

No. NL/KEM/ExTR06.0038/06.

(17) **Specific conditions of use**

When the enclosure of the Temperature Transmitter, iTEMP Type TMT142 and iTEMP Type TMT162 is made of aluminium, if it is mounted in an area where the use of EPL Ga apparatus is required, it must be installed such, that, even in the event of rare incidents, ignition sources due to impact and friction sparks are excluded.

When the enclosure is provided with an non-conductive coating, electrostatic charges on the equipment enclosure shall be avoided. For more details see safety instructions.

(18) **Essential Health and Safety Requirements**

Covered by the standards listed at item (9).

(19) **Test documentation**

As listed in Report No. NL/KEM/ExTR06.0038/06.

(20) **Certificate history**

Issue 0 -	222429400	initial certificate
Issue 1 -	225649300	assessed per EN IEC 60079 : 2018

Page 2/2

Form 227A
Version 2 (2019-06)

A.11.3 Declaration of Conformity

EG/EU-Konformitätserklärung
EC/EU-Declaration of Conformity
Déclaration CE/UE de Conformité

Endress+Hauser
People for Process Automation

CE

Company **Endress+Hauser Wetzer GmbH+Co. KG, Obere Wank 1, 87484 Nesselwang**

erklärt als Hersteller in alleiniger Verantwortung, dass das Produkt
declares as manufacturer under sole responsibility, that the product
déclare sous sa seule responsabilité en qualité de fabricant que le produit

Product **iTEMP temperature field transmitter**
TMT162, TMT142

Regulations den folgenden Europäischen Richtlinien entspricht:
conforms to following European Directives:
est conforme aux prescription des Directives Européennes suivantes :

	gültig bis/valid until/date d'expiration 19.04.2016	gültig ab/valid from/valide à partir du 20.04.2016
EMC	2004/108/EC (L 390/24)	2014/30/EU (L 96/79)
LVD	2006/95/EC (L 374/10)	2014/35/EU (L 96/357)

Standards angewandte harmonisierte Normen oder normative Dokumente:
applied harmonized standards or normative documents:
normes harmonisées ou documents normatifs appliqués :

EN 61326-1	(2013)
EN 61326-2-3	(2013)
EN 61326-2-5	(2013)
EN 61010-1	(2010)

Nesselwang, 11.12.2015
Endress+Hauser Wetzer GmbH+Co. KG

Harald Hertweck
Managing Director

EC_00100_01.15

EU-Konformitätserklärung
EU-Declaration of Conformity
Déclaration UE de Conformité

Endress+Hauser
People for Process Automation

Company **Endress+Hauser Wetzer GmbH+Co. KG, Obere Wank 1, 87484 Nesselwang**

erklärt als Hersteller in alleiniger Verantwortung, dass das Produkt
declares as manufacturer under sole responsibility, that the product
déclare sous sa seule responsabilité en qualité de fabricant que le produit

Product **iTEMP temperature field transmitter**
TMT162, TMT142

Regulations den folgenden Europäischen Richtlinien entspricht:
conforms to following European Directives:
est conforme aux prescription des Directives Européennes suivantes :

EMC	2014/30/EU (L 96/79)
ATEX	2014/34/EU (L 96/309)
RoHS	2011/65/EU (L 174/88)

Standards angewandte harmonisierte Normen oder normative Dokumente:
applied harmonized standards or normative documents:
normes harmonisées ou documents normatifs appliqués :

EN 61326-1	(2013)	EN 60079-0	(2012)	+ A11(2013)
EN 61326-2-3	(2013)	EN 60079-11	(2012)	
EN 61326-2-5	(2013)			
EN 61010-1	(2010)			
EN 50581	(2012)			

Certification

EU-Baumusterprüfbescheinigung Nr. EU-Type Examination Certificate No. Numéro de l'attestation d'examen UE de type	DEKRA 17ATEX0048X
Ausgestellt von/issued by/délivré par Qualitätssicherung/Quality assurance/Système d'assurance qualité	DEKRA Certification B.V. (0344) TÜV Nord Cert (0044)

Nesselwang, 22.02.2018
Endress+Hauser Wetzer GmbH+Co. KG

Harald Hertweck
Managing Director

EC_00649_01.18 1/1

A.11.4 Safety instructions

XA00050R/09/A3/14.16
71341817

Products Solutions Services

Safety Instructions
TMT142

iTEMP Temperature field transmitter HART®

ATEX: II1G Ex ia IIC Ga
IECEx: Ex ia IIC Ga

DE Dokument: XA00050R
Sicherheitshinweise für elektrische Betriebsmittel für explosionsgefährdete Bereiche gemäß Richtlinie 2014/34/EU (ATEX) → 🗎 5

EN Document: XA00050R
Safety instructions for electrical apparatus for explosion-hazardous areas according to Directive 2014/34/EU (ATEX)
→ 🗎 9

FR Document: XA00050R
Conseils de sécurité pour matériels électriques destinés aux zones explosibles selon Directive 2014/34/EU (ATEX)
→ 🗎 13

Endress+Hauser
People for Process Automation

BG - Правила за техниката на безопасност за електрически средства за производство във взривоопасни зони. Ако не разбирате езика на това ръководство има възможност да споръчате при нас едно ръководство, преведено на езика на Вашата страна.
ЕС декларация за съответствие
Производителят Endress+Hauser декларира с това заявление за съответствие и с предявяването на сертификата CE, че този продукт отговаря на изискванията на съответните европейски директиви. Прилаганите директиви, норми и документи са указани в заявлението за съответствие.

CS - Bezpečnostní pokyny pro elektrické přístroje v místech s nebezpečím výbuchu. Pokud nemáte možnost přečíst si tento návod, můžete si u nás objednat návod přeložený do svého jazyka.
EU prohlášení o shodě
Společnost Endress+Hauser prohlašuje prostřednictvím tohoto prohlášení a použitím značky CE, že tento výrobek vyhovuje příslušným evropským směrnicím. Zmíněné směrnice, normy a dokumenty jsou uvedeny v Prohlášení o shodě.

DA - Sikkerhedsforskrifter for elektriske apparater certificeret til brug I eksplosionsfarlige områder. Hvis du ikke forstår denne manual, kan en oversat kopi af den på dit eget sprog bestilles fra os.
EU-overensstemmelseserklæring
Med denne overensstemmelseserklæring og tilføjelsen af CE-mærket sikrer producenten Endress+Hauser, at produktet er I overensstemmelse med relevante europæiske direktiver. Dokumentation for overensstemmelsen gives i de anførte direktiver, standarder og dokumenter.

EL - Οδηγίες ασφαλείας ηλεκτρικών συσκευών για επικίνδυνες για έκρηξη περιοχές. Σε περίπτωση που δεν μπορείτε να διαβάσετε αυτές τις οδηγίες, τότε μπορείτε να παραγγείλετε ένα αντίτυπο μεταφρασμένο στη γλώσσα σας.
Δήλωση συμμόρφωσης ΕΕ
Με αυτή τη δήλωση πιστότητας και την τοποθέτηση του σήματος CE ο κατασκευαστής Endress+Hauser δηλώνει, ότι αυτό το προϊόν συμορφώνεται με τις ευρωπαϊκές οδηγίες που πρέπει να εφαρμοστούν. Οι οδηγίες, τα πορότυπα και τα έγγραφα που εφαρμόστηκαν αναφέρονται στη δήλωση πιστότητας.

ES - Instrucciones de seguridad de aparatos eléctricos homologados para su utilización en áreas expuestas a riesgos de deflagración. Si no entiende este manual, puede pedir un ejemplar en su idioma.
Declaración UE de conformidad
Por la presente declaración y la inclusión de la marca CE, el fabricante Endress+Hauser, declara que el producto cumple con las directivas europeas pertinentes. Las directivas, normas y documentos de aplicación se indican en la declaración de conformidad.

ET - Ohutusjuhised plahvatusohtlikus keskkonnas kasutatavate elektriseadmete kohta. Kui Te ei saa käesolevast juhendist aru, võite meilt tellida Teie riigikeelde tõlgitud juhendi.
EL i vastavusdeklaratsioon
Tootja Endress+Hauser kinnitab juurdelisatud vastavusdeklaratsiooni esitamisega ja CE-märgise kandmisega tootele, et käesolev toode vastab kohaldatavate Euroopa Liidu direktiivide nõuetele. Kohaldatavad direktiivid, standardid ja dokumendid on ära toodud vastavusdeklaratsioonis.

FI - Turvallisuusohjeita sähkölaitteille, jotka on vahvistettu käytettäväksi räjähdysvaarallisilla alueilla. Jos et ymmärrä tätä käsikirjaa, voit tilata meiltä käännöksen omalla kansallisella kielelläsi.
EU-vaatimustenmukaisuusvakuutus
Valmistaja Endress+Hauser vakuuttaa tällä vaatimustenmukaisuustodistuksella ja CE-merkin kiinnittämisellä, että tämä tuote täyttää sovellettavien EU-direktiivien määräykset. Sovellettavat direktiivit, normit ja dokumentit on merkitty vaatimustenmukaisuustodistukseen.

HR - Sigurnosni naputci za elektromaterijal u sredini u kojoj prijeti opasnost od eksplozije. Ako Vam nije moguće čitati ovaj naputak, onda imate mogućnost da kod nas naručite naputak sastavljen na Vašem materinskom jeziku.
EU izjava o sukladnosti
Dobavljač Endress+Hauser jamči ovom izjavom i stavljanjem oznake CE da ovaj proizvod udovoljava zahtjevima europskih direktiva koje su na snazi. U izjavi o usuglašenosti se navode direktive, norme i dokumenti koji su na snazi.

HU - Biztonsági információk robbanásveszélyes területre való elektromos eszközökhöz. Amennyiben nem tudja elolvasni ezt az útmutatót, akkor megrendelheti az Ön anyanyelvére lefordítva is.
EU-megfelelőségi nyilatkozat
Az Endress+Hauser mint gyártó jelen megfelelőségi nyilatkozattal és a CE-jelzés felhelyezésével kijelenti, hogy ez a termék megfelel az alkalmazandó európai irányelveknek. Az alkalmazott irányelvek, szabványok és dokumentumok a megfelelőségi nyilatkozatban fel vannak tüntetve.

IT - Istruzioni di sicurezza per apparecchiature elettriche certificate per l'utilizzo in aree con pericolo di esplosione. Se il presente manuale non risulta comprensibile potete ordinarcene una copia tradotta nella vostra lingua.
Dichiarazione di conformità UE
Con questa dichiarazione e con l'applicazione del marchio CE, il costruttore Endress+Hauser, assicura che il prodotto è conforme alle direttive europee vigenti. Prova della conformità è fornita dall'osservanza delle direttive, delle norme e dei documenti elencati.

LT - Elektros įrenginio saugumo nurodymai, susiję su sprogimo zonomis. Jeigu negalite perskaityti šios instrukcijos, kreipkitės į mus, kad užsisakytumėte į jūsų gimtąją kalbą išverstą instrukciją.
ES atitikties deklaracija
Gamintojas Endress+Hauser šia atitikties deklaracija ir CE ženklinimu patvirtina, kad gaminys atitinka taikytinas ES direktyvas. Taikomos direktyvos, normos ir dokumentai yra pateikiami atitikties deklaracijoje.

LV - Drošības norādījumi elektrisko darba instrumentu lietošanai apgabalos, kas pakļauti sprādzienbīstamībai. Ja Jums nav iespēju izlasīt šos norādījumus, Jūs varat pasūtīt pie mums tulkojumu Jūsu valsts valodā.
ES atbilstības deklarācija
Ražotājs Endress+Hauser ar šo atbilstības apliecinājumu un CE zīmola lietojumu apstiprina, ka produkts izgatavots sakaņā ar atbilstošajām Eiropas vadlīnijām. Piemērotās vadlīnijas, normas un dokumenti atrunāti atbilstības apliecinājumā.

NL - Veiligheidsinstructies voor elektrisch materieel in explosiegevaarlijke omgeving. Wanneer u deze handleiding niet kunt lezen, kunt u een in uw landstaal vertaalde handleiding bij ons bestellen.
EU-conformiteitsverklaring
De leverancier Endress+Hauser waarborgt met deze verklaring en het aanbrengen van het CE-teken, dat dit product overeenstemt met de geldende Europese richtlijnen. De geldende richtlijnen, normen en documenten zijn aangegeven in de conformiteitsverklaring.

PL - Wskazówki dot. bezpieczeństwa dla urządzeń elektrycznych stosowanych w obszarze zagrożonym wybuchem. Jeśli niniejsza instrukcja napisana jest w języku, którym się nie posługujesz, możesz zamówić u nas przetłumaczony dokument.
Deklaracja zgodności UE
Producent Endress+Hauser w niniejszej deklaracji zgodności wraz z nadaniem znaku CE oświadcza, że produkt ten jest zgodny z obowiązującą Europejską Dyrektywą. Zastosowane wytyczne, normy oraz dukumenty podane są w deklaracji zgodności.

PT - Instruções de segurança para dispositivos eléctricos certificados para utilização em áreas de risco de incêndio. Se não compreender este manual, pode encomendar-nos directamente uma cópia na sua língua.
Declaração UE de conformidade
Com esta declaração de conformidade e a aplicação da marca CE, o fabricante Endress+Hauser, garante que o produto obedece às directivas europeias a aplicar. As directivas, normas e documentos são apresentadas na declaração de conformidade.

RO - Indicații de siguranță pentru mijloacele de producție electrice pentru zonele periclitate de explozie. Dacă nu puteți citi aceste instrucțiuni, atunci puteți comanda la noi instrucțiunile traduse în limba țării dumneavoastră.
Declarația UE de conformitate
Producătorul Endress+Hauser declară prin declarația de conformitate alăturată şi prin aplicarea semnului CE că acest produs corespunde directivelor europene aplicabile. Directivele, normele aplicate şi documentele sunt menționate în declarația de conformitate.

SK - Bezpečnostné pokyny pre elektrické zariadenie prevádzkované v priestoroch s nebezpečenstvom výbuchu. Ak nemáte možnosť prečítať si tento návod, môžete si u nás objednať návod preložený do svojho jazyka.
EÚ vyhlásenie o zhode
Spoločnosť Endress+Hauser vyhlasuje prostredníctvom tohto vyhlásenia o konformite a použitím značky CE, že tento výrobok vyhovuje príslušným európskym smerniciam. Zmieňované smernice, normy a dokumenty sú uvedené vo Vyhlásení o konformite.

SL - Varnostni napotki glede električne opreme, namenjene za uporabo veksplozivnih območjih. Če teh navodil ne morete razumeti, lahko pri nas naročite prevod v vaš jezik.
Izjava EU o skladnosti
Proizvajalec Endress+Hauser s to izjavo o skladnosti in navedbo oznake CE izjavlja, da je ta izdelek skladen s predpisanimi evropskimi smernicami. Upoštevane smernice, standardi in dokumenti so navedeni v izjavi o skladnosti.

SV - Säkerhetsföreskrifter för elektrisk utrustning certifierad för användning i explosionsfarliga områden. Om du inte förstår denna manual, kan en översatt kopia på ditt eget språk beställas från oss.
EU-försäkran om överensstämmelse
Endress+Hauser försäkrar med vidstående försäkran om överensstämmelse och med CE-märkningen att denna produkt överensstämmer med de tillämpbara europeiska riktlinjerna. De tillämpade riktlinjerna, normerna och dokumenten anges i försäkran om överensstämmelse.

EG/EU-Konformitätserklärung
EC/EU-Declaration of Conformity
Déclaration CE/UE de Conformité

Endress+Hauser
People for Process Automation

CE

Company **Endress+Hauser Wetzer GmbH+Co. KG, Obere Wank 1, 87484 Nesselwang**

erklärt als Hersteller in alleiniger Verantwortung, dass das Produkt
declares as manufacturer under sole responsibility, that the product
déclare sous sa seule responsabilité en qualité de fabricant que le produit

Product **iTEMP temperature field transmitter**
TMT162, TMT142

Regulations den folgenden Europäischen Richtlinien entspricht:
conforms to following European Directives:
est conforme aux prescription des Directives Européennes suivantes :

	gültig bis/valid until/date d'expiration 19.04.2016	gültig ab/valid from/valide à partir du 20.04.2016
EMC	2004/108/EC (L 390/24)	2014/30/EU (L 96/79)
ATEX	94/9/EC (L 100/1)	2014/34/EU (L 96/309)

Standards angewandte harmonisierte Normen oder normative Dokumente:
applied harmonized standards or normative documents:
normes harmonisées ou documents normatifs appliqués :

EN 61326-1	(2013)	EN 60079-0	(2012)	+ Cor. (2013)
EN 61326-2-3	(2013)	EN 60079-1	(2007)	
EN 61326-2-5	(2013)	EN 60079-11	(2012)	
EN 61010-1	(2010)	EN 60079-26	(2007)	EN 60079-31 (2009)

Die in der zugehörigen EU-Baumusterprüfbescheinigung KEMA 02ATEX2338 X genannten Normen wurden durch neue Ausgaben ersetzt. Die Änderungen in den neuen Normen betreffen unsere Produkte nicht. Wir erklären für das genannte Produkt auch die Übereinstimmung mit den Anforderungen der neuen Normenausgabe.
The standards associated to the EU-certificate of conformity KEMA 02ATEX2338 X have been replaced by new editions. The modification in the new standards does not apply to our products. We therefore declare the conformity to the stated product with the requirements of the new issued standards.
Les normes associées au certificat CE de conformité KEMA 02ATEX2338 X ont été remplacées par de nouvelles éditions. Les modifications dans les nouvelles normes ne s'appliquent pas à nos produits. Nous déclarons donc la conformité du produit cité avec les exigences des nouvelles éditions des normes.

Certification EG-Baumusterprüfbescheinigung Nr.
EC-Type Examination Certificate No.
Numéro de l'attestation d'examen CE de type — KEMA 02ATEX2338 X

Ausgestellt von/issued by/délivré par — DEKRA Certification B.V. (0344)
Qualitätssicherung/Quality assurance/Système d'assurance qualité — TÜV Nord Cert (0044)

Nesselwang, 20.01.2016
Endress+Hauser Wetzer GmbH+Co. KG

Harald Hertweck
Managing Director

EC_00164_01.16 71316005

TMT142

iTEMP Temperature field transmitter HART®

Table of contents

Associated documentation 10
Supplementary documentation 10
Certificates 10
Safety instructions 11
Safety instructions: Installation 11
Safety instructions: Zone 0 12
Safety instructions: Special conditions 12
Temperature tables 12
Electrical connection data 12

Associated documentation

This document is an integral part of the following Operating Instructions:

- Operating instructions: BA00191R/09
  Brief operating instructions: KA00222R/09/
- Technical information: TI00107R/09/

Supplementary documentation

Explosion-protection brochure: CP00021Z/11

The Explosion-protection brochure is available: In the download area of the Endress+Hauser website: www.endress.com → Download → Advanced → Documentation code: CP00021Z

Certificates

Declaration of Conformity

→ 🗎 4

IECEx Certificate
Certificate number: KEM 06.0038X

Affixing the certificate number certifies conformity with the following standards (depending on the device version).

- IEC 60079-0: 2011
- IEC 60079-11: 2011
- IEC 60079-26: 2006

Safety instructions

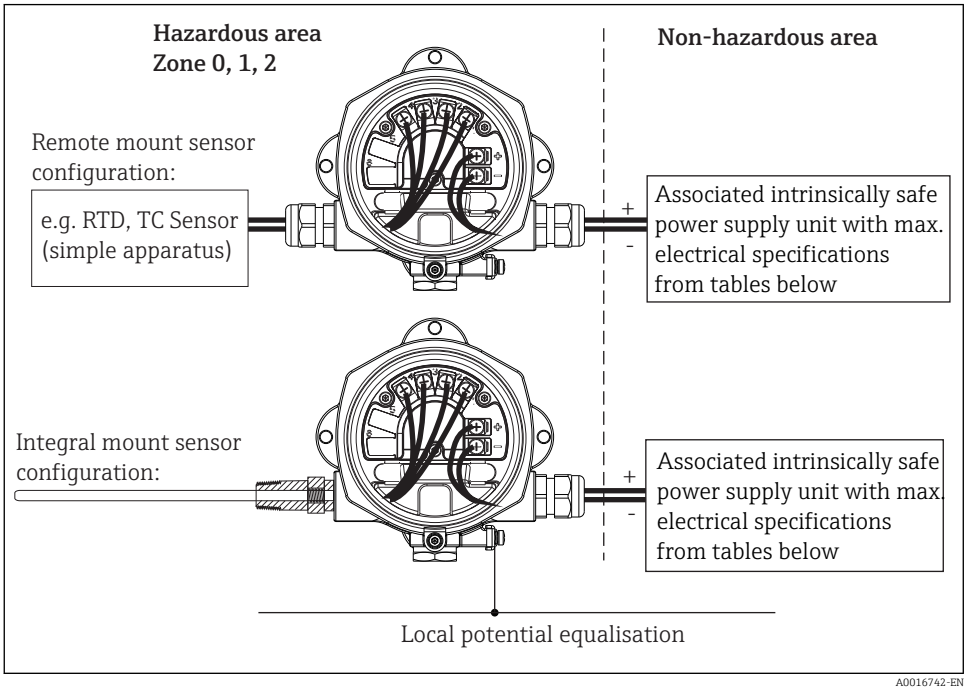

A0016742-EN

Safety instructions: Installation

- Comply with the installation and safety instructions in the Operating Instructions.
- Install the device according to the manufacturer's instructions and any other valid standards and regulations (e.g. IEC 60079-14).
- The type of protection changes as follows when the devices are connected to certified intrinsically safe circuits of Category ib: Ex ib IIC. When connecting an intrinsically safe ib circuit, do not operate the sensor at Zone 0.
- When connecting two independent sensors make sure that the potential equalisation cables are at the same potential.

Safety instructions: Zone 0

- Only operate devices in potentially explosive vapour/air mixtures under atmospheric conditions:
  - -20 °C ≤ Ta ≤ +60 °C
  - 0.8 bar ≤ p ≤ 1.1 bar
- If no potentially explosive mixtures are present, or if additional protective measures have been taken, according to EN 1127-1, the transmitters may be operated under other atmospheric conditions in accordance with the manufacturer's specifications.
- Associated apparatus with galvanic isolation between the intrinsically safe and non-intrinsically safe circuits are preferred.

Safety instructions: Special conditions

The temperature transmitter must be installed so, that even in the event of rare incidents, an ignition source due to impact or friction between the enclosure and iron/steel is excluded.

Temperature tables

Type	Temperature class	Ambient temperature
TMT142	T6	−40 °C ≤ Ta ≤ +55 °C
	T5	−40 °C ≤ Ta ≤ +70 °C
	T4	−40 °C ≤ Ta ≤ +85 °C

Electrical connection data

Type	Electrical data		
TMT142 (HART®)	Supply (terminals + and -):	Ui ≤ 30 V_{DC} Ii ≤ 300 mA Pi ≤ 1000 mW Ci ≤ 5 nF Li = 0	
	Sensor circuit (terminals 1 to 6):	Uo ≤ 7.6 V_{DC} Io ≤ 29.3 mA Po ≤ 55.6 mW	
	Maximum connection values: Ex ia IIC Ex ia IIB Ex ia IIA	 Lo = 40 mH Lo = 150 mH Lo = 300 mH	 Co = 10.4 µF Co = 160 µF Co = 1000 µF

Category	Type of protection (ATEX/IECEx)	Type
II 1G	Ex ia IIC T6...T4 Ga	TMT142

A.11.5 Calibration Certificate

Inspection Document

Endress+Hauser
People for Process Automation

Inspection certificate according to EN 10204 - 3.1

Order information

Customer	Emmerthaler Apparatebau GmbH
Customer purchase order	BST2101876/ 0
Sales order number / Item	7/3023913803/1025717072 / 0030
Internal order number / Item	3002119845/0030

Device Information

Description	Thermowell TW10
TAG	.
Serial number	S809E614152
Order code	TR10-GAD9BHRXC2100
Extended order code	-

Additional information

Component	Serial number
Thermometer	S809E614152
Thermowell	S80B5114188
Insert	S813BC14180
Transmitter	-

Statement

Hereby we confirm that the products supplied are in compliance with the requirements of the order. Additionally we confirm that the determinated test results fulfil the requirements of the order. Furthermore, we declare that during the manufacturing of the products supplied, the valid Endress+Hauser procedures have been followed. Specific tests and inspections have been performed and the relevant releases have been given.

List of Parts

Part	Internal lot no.	Heat number	Certificate No.	Material	Manufacturer
Reduced part	DOC042455	43981	2021/00707	1.4571	EURE INOX
Process connection 1/2" G	DOC042196	5X867302	A1906140098	316TI/1.4571	GIC
Tube thermowell	DOC043441	0440280	211084	316TI 1.4571	ZWAHLEN & MAYR

Inspector

Pessano con Bornago, 2021-09-09, Davide Madini

This document was generated electronically and is valid without a signature.

Endress+Hauser Sicestherm srl
Via Martin Luther King 7/9
20060 Pessano con Bornago (MI)
Italy
www.endress.it

Document ID: S809E614152

page 1 of 1

A.11.6 Test documentation

Inspection Document

Endress+Hauser
People for Process Automation

Inspection certificate according to EN 10204 - 3.1

Order information

Customer	Emmerthaler Apparatebau GmbH
Customer purchase order	BST2101876/ 0
Sales order number / Item	7/3023913803/1025717072 / 0030
Internal order number / Item	3002119845/0030

Device Information

Description	Thermowell TW10
TAG	.
Serial number	S809E614152
Order code	TR10-GAD9BHRXC2100
Extended order code	-

Additional information

Component	Serial number
Thermometer	S809E614152
Thermowell	S80B5114188
Insert	S813BC14180
Transmitter	-

Statement

Hereby we confirm that the products supplied are in compliance with the requirements of the order. Additionally we confirm that the determinated test results fulfil the requirements of the order. Furthermore, we declare that during the manufacturing of the products supplied, the valid Endress+Hauser procedures have been followed. Specific tests and inspections have been performed and the relevant releases have been given.

List of Parts

Part	Internal lot no.	Heat number	Certificate No.	Material	Manufacturer
Reduced part	DOC042455	43981	2021/00707	1.4571	EURE INOX
Process connection 1/2" G	DOC042196	5X867302	A1906140098	316TI/1.4571	GIC
Tube thermowell	DOC043441	0440280	211084	316TI 1.4571	ZWAHLEN & MAYR

Inspector

Pessano con Bornago, 2021-09-09, Davide Madini

This document was generated electronically and is valid without a signature.

Endress+Hauser Sicestherm srl
Via Martin Luther King 7/9
20060 Pessano con Bornago (MI)
Italy
www.endress.it

Document ID: S809E614152

page 1 of 1

A.11.7 Material certificates

GIC INDUSTRIAL COMPONENTS LLP
Manufacturers of precision machined & cold forged metal components
We Try Harder...

DOC042196

MATERIAL TEST CERTIFICATE

MATERIAL TEST CERTIFICATE ACC. TO EN 10204-3.1 DATE : 22-04-2021

VENDOR NAME: GIC INDUSTRIELCOMPONENTS LLP.	PART NAME: Process fitting G1/2 Di9,1 316Ti/1.4571	PARTY NAME : ENDRESS +HAUSER WETZER INDIA PVT LTD
DRG / SAP 71353670	LOT QTY: 172 Nos	CHALLAN NO 346 DATED 22-04-2021

SPECIFY IF ANY INDENTIFICATION ON PART:

			C%	Mn%	Si%	S%	P%	Cr%	Ni%	N%	Mo%	Ti
GRADE	1.4571/316Ti	MIN						16.500	10.500		2.000	
		MAX	0.080	2.000	1.000	0.030	0.045	18.000	13.500	0.100	2.500	0.700
SIZE	HEX 27.0	TC NO:-A1906140098										
H NO	5X867302	DT 14-06-2019	0.0130	1.6600	0.6000	0.0040	0.0290	16.6500	11.0400	0.0102	2.0500	0.1080

MECHANICAL PROPERTIEs	TEST CONDITIONS		UTS	YS	EL	RA	HARDNESS (HBW)		GRAIN SIZE
			N/mm²	N/mm²	PER%	PER%	HARDNESS (HRB)		
GRADE 1.4571/316Ti	ASTM A 370 : 2012		515 Min		40 Min	50 Min			
H NO 5X867302			710	580	40.00	69.00	91		

REMARKS:
1) Ultrasonoc testing Passed
2) Microstructure (Grain size) as per ASTM E -112
3) The material is free Mercury from Radioactive contaminations.
4) Lead has not been added during manufacturing
5)Material confirms the requirements as per NACE MR0103 & 2012/MR 0175/ISO 15156-01.2015
6) No weding Marks present on RM

GIC LLP: Certified that the material described here in has been inspected and tested and confimres to the requirement as prescribed in the purchase order.

JUDGEMENT	REMARKS	DATE	PREPARED BY	APPROVED BY
		22-04-2021	HAFIZ	YNSV

GIC INDUSTRIAL COMPONENTS LLP ★ JAMNAGAR

HEAD OFFICE / UNIT 1 UNIT 2

ZWAHLEN & MAYR
ZM TUBES
Z.I. 2, CH-1860 AIGLE
Tel. ++41-(0)24-468 46 46
Fax ++41-(0)24-468 46 01

DOC043441

INSPECTION CERTIFICATE

CERTIFICAT DE RECEPTION
ABNAHMEPRÜFZEUGNIS

EN 10204 - 3.1

N° **211084**

SHEET / PAGE / SEITE 1 OF / DE / VON 1

Certified ISO 9001
LRQA n° 943175
Quality System Management

ISO 9001

* DER TÜV SUDWEST HAT MIT SCHREIBEN VOM 3 NOVEMBER 1992 AUF DIE GEGENZEICHNUNG VERZICHTET

CONFIRMATION N°: / AUFTRAGS N° **48643 D**

CUSTOMER: / CLIENT/ KUNDE **ENDRESS + HAUSER**

CUSTOMER ORDER N° COMMANDE CLIENT / KUNDENBESTELLUNG	SPECIFICATIONS: ANFORDERUNGEN	HEAT N. COULEE N. SCHMELZE N.	QUANTITY QUANTITE STÜCKE	DIMENSIONS mm ABMESSUNGEN	LENGTH LONGUEUR LÄNGE mm	STEEL GRADE NUANCE D'ACIER MARKENBEZEICHNUNG
1001317520						
PRODUCT PRODUIT / PRÜFGEGENSTAND **REDRAWN TUBES - TUBES ETIRES - NACHGEZOGENE ROHRE**	**EN 10217-7 WCR**	**0440280**	**1036.3 m**	**9.00 x 1.25**	**3000.00**	**1.4571**

HEAT ANALYSIS ANALYSE DE COULEE / SCHMELZANALYSE

HEAT N. COULEE N. SCHMELZE N.	% C	% Si	% Mn	% P	% S	% Cr	% Ni	% Mo	% N	% Ti	% Cu	% Fe	% Al	% Co	% B	% Zr	%	%
0440280	0.031	0.670	1.65	0.032	0.001	16.71	10.83	2.06	0.013	0.280	0.350							

PRODUCT ANALYSIS ANALYSE PRODUIT / STÜCKANALYSE

HEAT N. COULEE N. SCHMELZE N.	% C	% Si	% Mn	% P	% S	% Cr	% Ni	% Mo	% N	% Ti	% Cu	% Fe	% Al	% Co	% B	% Zr	%	%
PIECE	0.0235	0.629	1.03	0.0342	0.0019	16.60	10.70	2.01	0.0284	0.235	0.323							

(10 BAR = 1M Pa)

FLATTENING APLATISSEMENT RINGFALTVERSUCH	HYDROSTATIC TEST ESSAI HYDRAULIQ BAR WASSERDRUCKVERSUCH	FLARING EVASEMENT AUFWEITUNG
NE	**NE**	**NE**
FLANGING COLLET BORDELVERSUCH	REVERSE BENDING RETOURNEMENT INVERSE WURZELSEITIGER RINGFA	GRAIN SIZE ASTM GROSSEUR DE GRAIN KORNGRÖSSE
NE	**NE**	**NE**
CORROSION TEST TEST CORROSION IK TEST	P.M.I. TEST DE NON MELANGE VERWECHSELLUNGSPR.	VISUAL CONTROL CONTROLE VISUEL BESICHTIGUNGSKONTR.
NE	**S**	**S** **100 %**
SPECIFICATION SPEZIFIKATION	SPECIFICATION SPEZIFIKATION	SPECIFICATION SPEZIFIKATION
Ferrite content **<0.50%** **0.15%**		

HEAT TRAITMENT : TREATEMENT THERMIQUE WÄRMEBEHANDLUNG — ANNEALED AT : HYPERTREMPE A LÖSUNGSGEGLÜHT BEI — AND RAPIDLY COOLING ET REFROIDI RAPIDEMENT UND ABGESCHRECKT

100 % OF THE MATERIAL HAVE BEEN PASSED WITH SATISFACTORY RESULT THE : DU MATERIEL SATISFAIT AU(X) CONTROLE(S) DES MATERIALS HAT DIE PRÜFUNG BESTANDEN — **Eddy Current** — TEST ACCORDING TO : SUIVANT ENTSPRECHEND **EN 10893-2 E1H**

MARKING : MARQUAGE KENNZEICHNUNG ***ZM-EN 10217-7 WCR - Ø 9 x 1.25 - 1.4571/316Ti - HEAT 0440280-ON**

REMARKS : REMARQUE ANMERKUNG **According to NACE MR0175/MR0103 Tubes are free from mercury and radioactive contamination.The material has been furnished in accordance to the requirements.**

TEST RESULTS RESULTATS DES ESSAIS / ERGEBNIS DER PRÜFUNGEN (1 N/mm2 = 1M Pa)

SAMPLE ECHANTILLON PROBE	Ø OUT EXT AUSS.	Ø INT. INN.	WALL THIC. EPAISSEU WANDSTÄR	LENGTH LONGUEUR LÄNGE	ROUGHNESS RUGOSITE RAUHIGKEIT	ROUGHNESS RUGOSITE RAUHIGKEIT	ROUGHNESS RUGOSITE RAUHIGKEIT	TENSILE TRACTION / ZUGVERSUCH Rp 0,2% N/mm²	Rp 1% N/mm²	Rm N/mm²	A % Lo=5,65√ So	HARDNESS DURETE. HÄRTE	
TOLERANCES TOLERANZEN	**9.00** +0.10/0	**6.50** 0/-0.10	**1.25**	**3000.00** 0/-100	**Ext.Ra** <1.60 µm	µm	µm					HRC	
1	**9.06**	**6.45**	**1.31**	**2900**	**0.20**			235	269	507	56	<22	
2	**9.06**	**6.44**	**1.31**		**0.21**			237	270	509	56		
3	**9.06**	**6.44**	**1.31**	**3000**	**0.24**			242	274	507	56		
4	**9.07**	**6.45**	**1.31**		**0.22**			241	274	508	56		
5	**9.07**	**6.44**	**1.31**	**3000**	**0.21**			241	274	503	56	<22	

S = Satisfactory - Satisfaisant - Zufriedenstellend
NE = Not executed - Pas effectué - Nicht durchgeführt

Emis et vérifié par : Issued and checked by :

Z.M. QC Manager R. MARTENA

First issue : 16-juin-21 Modified :

DOC042455

Eure Inox

Eure Inox s.r.l.
Via L. Da Vinci, 2/4 • 20068 Peschiera Borromeo (MI)
tel. +39.02.547726.1 r.a. • fax +39.02.55305240
info@eureinox.it • www.eureinox.it • pec@pec.eureinox.it
c.f./p.iva IT12193360158 • cciaa 1539337
trib. Milano 268339/1997 • cap. sociale € 6.000.000

N.ro Certificato Inspection Certification Num.	Data Date	Ddt N.ro Delivery Note
2021/00707	15.01.2021	2021/00203

Cliente Customer	Vs N.ro Ordine / Ns. N.ro Ordine Customer Reference / Conf.Num.
NUOVA GALC - MINUT.M	EMAIL 11.12.2020 2020/09978

Materiale Material	Dimensione Dimension	Prodotto Product	Tolleranza Tolerance
ACCIAIO INOX 1.4571	Tondo 010.00	solubilizzato +AT +C trafilato cond. 2H	h9

Composizione Chimica / Chemical Composition — **Colata** / Cast N° 43981

Valori	C	P	S	Si	Mn	Cr	Ni	Mo	Ti	N	Cu	Nb
Reale	0,0190	0,0340	0,0170	0,4200	1,6600	16,7600	10,5500	2,0300	0,1500	0,0260	0,4800	
Min.	0,0800	0,0450	0,0300	1,0000	2,0000	16,5000	10,5000	2,0000	0,0100			
Max.						18,5000	13,5000	2,5000	0,7000			

	V	Co	Al	Osservazioni / Notes
Reale				
Min.				
Max.				

Caratteristiche Meccaniche / Mechanical Characteristics

N/mm2 - Mpa	Rm	Rp 0,2	Rp 1,0	Z	A4 %	A5 %	Hb	Hrc	Hrb	Hv	Resil.		
	690	590				28		21					
Valore Min. **Min.Value**								< 22					
Valore Max **Max.Value**													

Controllo Visuale / Visual	Controllo Radioattività / Radioactivity Control	Assenza Mercurio / Mercury Free
OK	GIA EFFETTUATO IN ORIGINE/ALREADY DONE IN ORIGIN	OK

Norme / Standards		Peso kg / Weight kg
NACE MR0103/ISO 17495-1:2016	NACE MR0175/ISO15156-3:2015	192
DIN 671	EN 10088-3:2014	
EN 10088-3:2014 CHEMICAL AN.	EN 10278	
EN 10278 EXCEPT DIAM. TOL.	PED 2014/68/EU	

Azienda con sistema di gestione certificato da IGQ secondo ISO9001

Federica Verzì

UFFICIO QUALITA'

La fornitura citata è conforme ai requisiti della conferma d'ordine e risponde in tutti gli aspetti alle richieste specificate.
The mentioned product is in compliance with the requirements of the order confirmation and meets the specified requirements.
Prodotto elaborato nel rispetto del regolamento REACH 1907/2006; Il materiale è conforme alle direttive : 2000/53 - 2002/95 (RoHS) – 2003/11 – 2005/618- 2011/65/UE
Material produced according to REACH 1907/2006 ; Material according to CE norms : 2000/53 - 2002/95 (RoHS) – 2003/11 – 2005/618 – 2011/65/UE

Certificate According to E.N.10204-3.1 / The chemical analisys are true and correct copy of raw material supplier's certificate

Il materiale fornito è controllato secondo la procedura per la misura della resistenza meccanica e rientra nelle caratteristiche imposte dalle norme richieste nell'ordine relativo a questa fornitura.

GIC INDUSTRIAL COMPONENTS LLP
Manufacturers of precision machined & cold forged metal components
We Try Harder...

DOC042196

MATERIAL TEST CERTIFICATE

MATERIAL TEST CERTIFICATE ACC. TO EN 10204-3.1

DATE : 22-04-2021

VENDOR NAME: GIC INDUSTRIELCOMPONENTS LLP.	PART NAME: Process fitting G1/2 Di9,1 316Ti/1.4571	PARTY NAME : ENDRESS +HAUSER WETZER INDIA PVT LTD
DRG / SAP 71353670	LOT QTY: 172 Nos	CHALLAN NO 346 DATED 22-04-2021

SPECIFY IF ANY INDENTIFICATION ON PART:

			C%	Mn%	Si%	S%	P%	Cr%	Ni%	N%	Mo%	Ti
GRADE	1.4571/316Ti											
		MIN						16.500	10.500		2.000	
		MAX	0.080	2.000	1.000	0.030	0.045	18.000	13.500	0.100	2.500	0.700
SIZE	HEX 27.0											
		TC NO:-A1906140098										
H NO	5X867302	DT 14-06-2019	0.0130	1.6600	0.6000	0.0040	0.0290	16.6500	11.0400	0.0102	2.0500	0.1080

MECHANICAL PROPERTIEs		TEST CONDITIONS		UTS	YS	EL	RA	HARDNESS (HBW)		GRAIN SIZE	
				N/mm²	N/mm²	PER%	PER%	HARDNESS (HRB)			
GRADE	1.4571/316Ti	ASTM A 370 : 2012		515 Min		40 Min	50 Min				
H NO	5X867302			710	580	40.00	69.00	91			

REMARKS:
1) Ultrasonoc testing Passed
2) Microstructure (Grain size) as per ASTM E -112
3) The material is free Mercury from Radioactive contaminations.
4) Lead has not been added during manufacturing
5)Material confirms the requirements as per NACE MR0103 & 2012/MR 0175/ISO 15156-01.2015
6) No weding Marks present on RM

GIC LLP: Certified that the material described here in has been inspected and tested and confimres to the requirement as prescribed in the purchase order.

JUDGEMENT	REMARKS	DATE	PREPARED BY	APPROVED BY
		22-04-2021	HAFIZ	YNSV

GIC INDUSTRIAL COMPONENTS LLP ★ JAMNAGAR

HEAD OFFICE / UNIT 1 UNIT 2

ZWAHLEN & MAYR
ZM TUBES

Z.I. 2, CH-1860 **AIGLE**
Tel. ++41-(0)24-468 46 46
Fax ++41-(0)24-468 46 01

DOC043441

* DER TÜV SUDWEST HAT MIT SCHREIBEN VOM 3 NOVEMBER 1992 AUF DIE GEGENZEICHNUNG VERZICHTET

INSPECTION CERTIFICATE

CERTIFICAT DE RECEPTION
ABNAHMEPRÜFZEUGNIS

EN 10204 - 3.1

N° **211084**

SHEET / PAGE / SEITE 1 OF / DE / VON 1

Certified ISO 9001
LRQA n° 943175
Quality System Management

CONFIRMATION N°: / AUFTRAGS N° **48643 D**

CUSTOMER: / CLIENT/ KUNDE **ENDRESS + HAUSER**

CUSTOMER ORDER N° COMMANDE CLIENT / KUNDENBESTELLUNG	SPECIFICATIONS: ANFORDERUNGEN	HEAT N. COULEE N. SCHMELZE N.	QUANTITY QUANTITE STÜCKE	DIMENSIONS mm ABMESSUNGEN	LENGTH LONGUEUR LÄNGE mm	STEEL GRADE NUANCE D'ACIER MARKENBEZEICHNUNG
1001317520						
PRODUCT PRODUIT / PRÜFGEGENSTAND **REDRAWN TUBES - TUBES ETIRES - NACHGEZOGENE ROHRE**	**EN 10217-7 WCR**	**0440280**	**1036.3 m**	**9.00 x 1.25**	**3000.00**	**1.4571**

HEAT ANALYSIS ANALYSE DE COULEE / SCHMELZANALYSE

HEAT N. COULEE N. SCHMELZE N.	% C	% Si	% Mn	% P	% S	% Cr	% Ni	% Mo	% N	% Ti	% Cu	% Fe	% Al	% Co	% B	% Zr	%	%
0440280	0.031	0.670	1.65	0.032	0.001	16.71	10.83	2.06	0.013	0.280	0.350							

PRODUCT ANALYSIS ANALYSE PRODUIT / STÜCKANALYSE

HEAT N. COULEE N. SCHMELZE N.	% C	% Si	% Mn	% P	% S	% Cr	% Ni	% Mo	% N	% Ti	% Cu	% Fe	% Al	% Co	% B	% Zr	%	%
PIECE	0.0235	0.629	1.03	0.0342	0.0019	16.60	10.70	2.01	0.0284	0.235	0.323							

(10 BAR = 1M Pa)

FLATTENING APLATISSEMENT RINGFALTVERSUCH	HYDROSTATIC TEST ESSAI HYDRAULIQ BAR WASSERDRUCKVERSUCH	FLARING EVASEMENT AUFWEITUNG
NE	**NE**	**NE**
FLANGING COLLET BORDELVERSUCH	REVERSE BENDING RETOURNEMENT INVERSE WURZELSEITIGER RINGFA	GRAIN SIZE ASTM GROSSEUR DE GRAIN KORNGRÖSSE
NE	**NE**	**NE**
CORROSION TEST TEST CORROSION IK TEST	P.M.I. TEST DE NON MELANGE VERWECHSELLUNGSPR.	VISUAL CONTROL CONTROLE VISUEL BESICHTIGUNGSKONTR.
NE	**S**	**S** **100 %**
SPECIFICATION SPEZIFIKATION	SPECIFICATION SPEZIFIKATION	SPECIFICATION SPEZIFIKATION
Ferrite content <0.50% 0.15%		

HEAT TRAITMENT : TREATEMENT THERMIQUE WÄRMEBEHANDLUNG — ANNEALED AT : HYPERTREMPE A LÖSUNGSGEGLÜHT BEI — AND RAPIDLY COOLING ET REFROIDI RAPIDEMENT UND ABGESCHRECKT

100 % OF THE MATERIAL HAVE BEEN PASSED WITH SATISFACTORY RESULT THE : DU MATERIEL SATISFAIT AU(X) CONTROLE(S) DES MATERIALS HAT DIE PRÜFUNG BESTANDEN — **Eddy Current** — TEST ACCORDING TO : SUIVANT ENTSPRECHEND **EN 10893-2 E1H**

MARKING : MARQUAGE KENNZEICHNUNG ***ZM-EN 10217-7 WCR - Ø 9 x 1.25 - 1.4571/316Ti - HEAT 0440280-ON**

REMARKS : REMARQUE ANMERKUNG **According to NACE MR0175/MR0103 Tubes are free from mercury and radioactive contamination.The material has been furnished in accordance to the requirements.**

TEST RESULTS RESULTATS DES ESSAIS / ERGEBNIS DER PRÜFUNGEN (1 N/mm2 = 1M Pa)

SAMPLE ECHANTILLON PROBE	Ø OUT EXT AUSS.	Ø INT. INN.	WALL THIC. EPAISSEU WANDSTÄR	LENGTH LONGUEUR LÄNGE	ROUGHNESS RUGOSITE RAUHIGKEIT	ROUGHNESS RUGOSITE RAUHIGKEIT	ROUGHNESS RUGOSITE RAUHIGKEIT	TENSILE TRACTION / ZUGVERSUCH Rp 0,2% N/mm2	Rp 1% N/mm2	Rm N/mm2	A % Lo=5,65 √ So	HARDNESS DURETE. HÄRTE
TOLERANCES TOLERANZEN	**9.00** +0.10/0	**6.50** 0/-0.10	**1.25**	**3000.00** 0/-100	**Ext.Ra** <1.60 µm	µm	µm					HRC
1	**9.06**	**6.45**	**1.31**	**2900**	**0.20**			235	269	507	56	<22
2	**9.06**	**6.44**	**1.31**		**0.21**			237	270	509	56	
3	**9.06**	**6.44**	**1.31**	**3000**	**0.24**			242	274	507	56	
4	**9.07**	**6.45**	**1.31**		**0.22**			241	274	508	56	
5	**9.07**	**6.44**	**1.31**	**3000**	**0.21**			241	274	503	56	<22

S = Satisfactory - Satisfaisant - Zufriedenstellend
NE = Not executed - Pas effectué - Nicht durchgeführt

Emis et vérifié par : Issued and checked by :

Z.M. QC Manager R. MARTENA

First issue : 16-juin-21 Modified :

A.12 Expansion joint

Name	Data
Designation	Expansion joint
Type	
Number	
Type of manual	*Technical documentation*
Manufacturer	HKS

A.12.1 Operating instructions

Operating Instructions for HKS Corrugated Tube Expansion joints

Because of their flexible elements and mechanisms, HKS corrugated tube expansion joints are susceptible to damage of all types and adverse loads in operation. For reliable operation of a expansion joint and, thus, the complete system and pressure device, carefully and completely read the following instructions and regulations and strictly observe. If these should appear to be doubtful or incomplete, consult HKS in any case.

1. Packaging / storage / transportation

1.1 Up to starting installation, the expansion joints must be stored in the transportation packaging in a dry, cool, dust-free room protected from light and reasonably ventilated. It is not permitted to store in the open protected from the weather. No solvent, fuels, chemicals or similar must simultaneously be stored. In particular, make sure that no condensation forms on the expansion joint.

1.2 As far as possible, transportation locks must also be removed after installation.

2. Assembly/installation instructions, commissioning

2.1 HKS corrugated tube expansion joints must only be installed and commissioned by trained, skilled installation personnel. Prerequisite for safe operation is the correct and professional installation!

2.2 Before installation, completely remove the packaging and check the expansion joint for any damage during transportation and /or storage, in particular for corrosion caused by damage to the surfaces. Also the voids between the corrugations of the bellows – inside and outside - must be free from all substances or material. Only fully serviceable expansion joints must be installed! If in doubt, consult HKS!

2.3 The connecting pipelines must fully align and be safely routed, so that no bending of the expansion joint can occur.

2.4 If the expansion joint has fixed flanges, their bolt holes must align with the connection flange on the pipeline.

2.5 Only 1 (one) expansion joint may be installed between 2 fixed points. The expansion of the section between these two points must be less than the maximum possible expansion acceptance of the expansion joint in accordance with the manufacturer data.

2.6 Install the expansion joint as close as possible to a fixed point, because then only one friction bearing is required on the other side of the expansion joint; otherwise a friction bearing is required on both sides. Clearance of the bearing points to the expansion joint must always be approx. 2 x the nominal diameter (DN). An external protection tube on the expansion joint Type AS or internal guide tube for expansion joint Type AF does not replace a friction bearing and fixed point!

2.7 The fixed points and friction bearing must be designed and measured by a specialist engineer or stress analyst for the maximum forces and torques occurring. The friction bearing in the guiding section must be constructed long enough to prevent jamming.

2.8 The installation length (EL) is dependent on the operating conditions. If pre-tensioning required, the installation length (EL) is greater or less than the overall length (BL).

2.9 Expansion joints must not be torsionally loaded. This must be observed particularly by the installation of expansion joints with fixed flanges and with a bolted fitting. Fundamentally, when installing all types of expansion joint, make sure, that no tube torsional stresses act on the expansion joint.

2.10 If the compensator is used as a vibration damper, this must be installed with no pretension. In this case, the installation length (EL) is the same as the overall length (BL).

2.11 HKS lateral expansion joints whose tension rod braces are fitted with additional internal bracing (convex washer, concave washer or locknuts) to absorb vacuum or external pressure are pre-set ex-works such that the tension rod bracing permits limited lateral deflection. A minimal gap between the bracing components guarantees this. Under no circumstances, must the locknuts be bolted tight at a later time; rather, they must stay turned back from the fixed setting by about a quarter rotation.

2.12 For expansion joints with an internal guide tube, observe the direction of flow!

2.13 If hoisting devices are used to install the expansion joint, these must not be attached to the sensitive parts, e.g. the expansion joint bellow.

2.14 Only carry out a pressure and leak test when the fixed points and guides are correctly installed.

Operating Instructions for HKS Corrugated Tube Expansion joints

2.15 When installing, make sure that the bellows of the expansion joints are not damaged (e.g. by weld spatter, thermal stress, mechanical damage, dents, scratches, impacts, falling objects, contamination etc.) and that no foreign objects get between the corrugation. The corrugation must be clear internally and externally and remain clear, so that the expansion joint can function correctly.

2.16 Pre-tensioning devices must only be removed after installation of the expansion joint is complete.

2.17 Insulation must only be installed after previous consultation with HKS and not on the bellow of the expansion joint.

2.18 No electrical current, e.g. from welding tasks must be conducted through the expansion joint, otherwise destruction of the metal bellows can occur.

2.19 The expansion joint should be installed so that uninhibited visual inspection for integrity can be carried out at regular intervals. If defects are visible, e.g. dents, cracks, corrosion, discolouration or irregular deformation, immediately inform HKS and/or replace the expansion joint.

2.20 It is imperative to observe the general valid and relevant safety and accident prevention regulations!

3. Operation

3.1 HKS corrugated tube expansion joints must only be operated within the limits of the design conditions in accordance with the data from the manufacturer.

3.2 HKS corrugated tube expansion joints must only be operated within the permitted pressure range. For the upper and lower limit of the permitted pressure range (minimum operating pressure, maximum operating pressure PS), refer to the HKS order documents. If no lower operating pressure limit is stated in the HKS order documents, this is 0 bar as standard.

3.3 Prevent impacts within the system.

3.4 HKS corrugated tube expansion joints must only be operated within the permitted temperature range. For the upper and lower limit of the permitted temperature range (minimum operating temperature, maximum operating temperature TS), refer to the HKS order documents. If no lower operating temperature limit is stated in the HKS temperature, this is -10 °C as standard.

3.5 The assimilated expansion must only be as great as the axial, lateral or angular expansion stated. A combination is only permitted with the corresponding reduction factors after previous written release by HKS!

3.6 The number of load cycles given in the HKS temperature must not be exceeded. If no maximum number of load cycles is given, the expansion joint is designed for a max. 1000 load cycles.

3.7 The expansion joint must only be exposed to media for which it has been intended and designed. If no information is given, it is only suitable for the medium of air or H_2O for vertical installation.

3.8 The formation of condensate on the external surfaces of the expansion joint must be prevented by the appropriate actions, unless it is not specially designed for this.

3.9 For safe operation of the expansion joint and, thus the whole system, it is imperative to observe and adhere to all of the information and instructions.

Operating Instructions for HKS Corrugated Tube Expansion joints

4. Maintenance

4.1 HKS corrugated tube expansion joints do not usually require any special maintenance. However, carry out thorough visual inspections at regular intervals. If contamination can ingress between the corrugations, carry out cleaning periodically. Cleaning must be carried out considering the material of the expansion joint and the environment, using agents and tools approved for stainless steel.

4.2 If aggressive substances should come into contact with the bellows, externally or internally, these must be immediately and thoroughly cleaned using a copious quantity of clean water.

4.3 For corrugated tube expansion joints operated outside, the joint bushes must be lubricated using a tenacious, water-resistant bearing grease, at appropriate maintenance intervals according to the environmental conditions. In order to prevent fretting, the ball-joint expansion joints should also be occasionally lubricated.

4.4 For all questions and ordering of spare parts, it is imperative to state the type and works number of the product (stamped on the type plate).

5. Repair

5.1 If repair of a expansion joint is required in an exceptional case, the tasks or modifications to the metal bellows and connecting parts of the expansion joint (such as, e.g. welding, cutting or soldering tasks) must only be carried out by staff from HKS, or companies authorized by HKS. Usually it is possible for HKS to rectify the damage at short notice by installing a new metal bellows, stored by HKS as a standard part.

5.2 If a repair is not possible, it is possible for HKS to supply a replacement expansion joint at short notice. In such a case, HKS detailed information should be given to HKS about how the damage occurred and operating conditions, so that it is perhaps possible for HKS to suggest improvement procedures.

5.3 For all questions and ordering of spare parts, it is imperative to state the type and works number of the product (stamped on the type plate).

6. Warranty

6.1 HKS assumes the warranty for their products in accordance with the statutory provisions of the Federal Republic of Germany (verification by the delivery note and invoice). Damage that occurs through natural degeneration (wear), overload or incorrect handling, are excluded from the warranty.

7. Environmental Protection

7.1 Product, accessories and packaging should be environmentally-friendly recycled.

A.12.2 Test documentation

Übersicht - Zeugnisse + Prüfungen
overviews - testimonials + inspections

Abnahmeprüfzeugnis / *Inspection certificate* ☑ "3.1" ☐ "3.2"		**Zeugnis-Nr.** / *Certificate No.* :	**2021 / 10116**
Besteller / *Customer*	Emmerthaler Apparatebau GmbH Langes Feld 4 31860 Emmerthal	**Kundenbestell-Nr.** /*Purchaser's order No.* **Auftrags-Nr.-DE** / *Order No.-DE*	BST2101830/0 4107341
Teil / *Part* :	Lateralkompensator DN40	**Bezugsdokument** / *reference document*	-
Kennzeichnung / *Marking*	RN 0040 / 016 / L016 / F / F - 125	**Bemerkung** / *Note*	-
Typ / *Type*	Lateralkompensator	**Serien-Nr.** / *Serial No.*	SN4107341-1-1 bis 10
Sach-Nr. / *Article-No.*	L715976	**Empfang Bestellung** / *Incoming date*	13.07.2021
Stückzahl / *No. of pieces*	10	**Liefertermin** / *Delivery date*	16.09.2021

Umst.-Nr.	**Teil**	**Werkstoff/ Festigkeit/ Härte**	**Schmelze**	**Abmessung [mm]**	**Zert.-Nr**	**der Firma**	**HKS/QS***
Rest.-No.	*Part*	*Material/ Hardness/ Fortress*	*Heat*	*Dimmensions [mm]*	*Cert.-No.*	*of Company*	*HKS/QS**
-	Balg / Bellow	1.4571	91788	DN 40	13543	Otelinox	-
-	Flansch / Flange	1.4571	312385	DN 40	13816	SHS	-

Wir bestätigen, dass die gelieferten Erzeugnisse die in der Bestellung festgelegten Anforderungen erfüllen.
We confirm, that the products fullfill the requirements of the order.

Schweißnahtprüfung / *Weld seam test - VT*	**i.O./OK**	**WPQR** / *WPQR*	-
Maß- u. Sichtkontrolle / *Dim. check and visual inspection*	**i.O./OK**	**Herstellererklärung** / *Manufacturer's declaration*	-
Farbeindringprüfung / *Liguid Penetrant Test*	-	**Werksbescheinigung** / *Declaration of compliance*	-
Röntgenprüfung / *X-Ray test*	-	**Betriebsanleitung** / *Operating Instruction*	**ja/yes**
Wärmebehandlung / *Heat treatment*	-	**Konformitätserklärung** / *Declaration on conformity*	-
Helium Test / *Helium test*	-	**Kategorie** / *Category*	-
Dichtheitsprüfung / *Leakage test*	-	**Mediumeigenschaft** / *Fluid groups*	-
Druckprüfung (Luft) / *Pressure test (Air)*	-	**Nennweite DN** / *Diameter nominal*	**40**
Druckprüfung (Wasser) / *Pressure test (Water)*	-	**max. Betriebstemperatur** / *max.Working temperature* , **TS** [°C]	**100**
Anstrich / *Painting*	-		
Ultraschallprüfung / *Ultrasonic test*	-	**Betriebsdruck** / *Working Pressure* , **PS** [bar]	**10**
Abnahme durch / *Inspection from*	-	**Prüfdruck** / *Test pressure* , **PT** [bar]	-
Entwurfsprüfung durch / *Approved by*	-		

* **Bemerkung** / *Remark* :

Ort, Datum / *Place, date* :
Rostock, 16.09.2021

Anja Konow
- Qualitätswesen / Quality department -

A.12.3 Material certificates

Übersicht - Zeugnisse + Prüfungen
overviews - testimonials + inspections

HKS

Abnahmeprüfzeugnis / *Inspection certificate* ☑ "3.1" ☐ "3.2"		**Zeugnis-Nr.** / *Certificate No.* :	**2021 / 10116**
Besteller / *Customer*	Emmerthaler Apparatebau GmbH Langes Feld 4 31860 Emmerthal	**Kundenbestell-Nr.** /*Purchaser's order No.* **Auftrags-Nr.-DE** / *Order No.-DE*	BST2101830/0 4107341
Teil / *Part* :	Lateralkompensator DN40	**Bezugsdokument** / *reference document*	-
Kennzeichnung / *Marking*	RN 0040 / 016 / L016 / F / F - 125	**Bemerkung** / *Note*	-
Typ / *Type*	Lateralkompensator	**Serien-Nr.** / *Serial No.*	SN4107341-1-1 bis 10
Sach-Nr. / *Article-No.*	L715976	**Empfang Bestellung** / *Incoming date*	13.07.2021
Stückzahl / *No. of pieces*	10	**Liefertermin** / *Delivery date*	16.09.2021

Umst.-Nr.	**Teil**	**Werkstoff/ Festigkeit/ Härte**	**Schmelze**	**Abmessung [mm]**	**Zert.-Nr**	**der Firma**	**HKS/QS***
Rest.-No.	*Part*	*Material/ Hardness/ Fortress*	*Heat*	*Dimmensions [mm]*	*Cert.-No.*	*of Company*	*HKS/QS**
-	Balg / Bellow	1.4571	91788	DN 40	13543	Otelinox	-
-	Flansch / Flange	1.4571	312385	DN 40	13816	SHS	-

Wir bestätigen, dass die gelieferten Erzeugnisse die in der Bestellung festgelegten Anforderungen erfüllen.
We confirm, that the products fullfill the requirements of the order.

Schweißnahtprüfung / *Weld seam test - VT*	**i.O./OK**	**WPQR** / *WPQR*	-
Maß- u. Sichtkontrolle / *Dim. check and visual inspection*	**i.O./OK**	**Herstellererklärung** / *Manufacturer's declaration*	-
Farbeindringprüfung / *Liguid Penetrant Test*	-	**Werksbescheinigung** / *Declaration of compliance*	-
Röntgenprüfung / *X-Ray test*	-	**Betriebsanleitung** / *Operating Instruction*	**ja/yes**
Wärmebehandlung / *Heat treatment*	-	**Konformitätserklärung** / *Declaration on conformity*	-
Helium Test / *Helium test*	-	**Kategorie** / *Category*	-
Dichtheitsprüfung / *Leakage test*	-	**Mediumeigenschaft** / *Fluid groups*	-
Druckprüfung (Luft) / *Pressure test (Air)*	-	**Nennweite DN** / *Diameter nominal*	**40**
Druckprüfung (Wasser) / *Pressure test (Water)*	-	**max. Betriebstemperatur** / *max.Working temperature* , **TS** [°C]	**100**
Anstrich / *Painting*	-		
Ultraschallprüfung / *Ultrasonic test*	-	**Betriebsdruck** / *Working Pressure* , **PS** [bar]	**10**
Abnahme durch / *Inspection from*	-	**Prüfdruck** / *Test pressure* , **PT** [bar]	-
Entwurfsprüfung durch / *Approved by*	-		

* **Bemerkung** / *Remark* :

Ort, Datum / *Place, date* :
Rostock, 16.09.2021

Anja Konow
- Qualitätswesen / Quality department -

HKS GmbH · Schonenfahrerstraße 1 · D - 18057 Rostock
Tel.: + 49 (0) 381 865160-0 · Fax: + 49 (0) 381 865160-60
Internet: www.hks.de

FO_042

INSPECTION CERTIFICATE

(according to DIN EN 10204, type 3.1)

No: 0042121534

otelinox
A subsidiary of SAMSUNG C&T

Manufacturer:
Otelinox S.A.
Strada Soseaua Gaesti no. 16
Targoviste, 130087
Dambovita, Romania

Member of CISQ Federation
RINA SIMTEX
CERTIFIED MANAGEMENT SYSTEM
ISO 9001
Member of CISQ Federation
RINA SIMTEX
CERTIFIED MANAGEMENT SYSTEM
IATF 16949
Laboratory Accredited by RENAR, ISO/CEI 17025, Certificate no.LI 007
SPAC ISO 14001
SPAC Certifica N. 174 OHSAS 18001

Customer: FLEXOMAT GMBH
Customer Ord.No.: 1000308055
Product: Coils 7 pieces
Steel grade: 1.4571/2R; AISI 316Ti/BA

Melting process: E
Specification: AD2000W2; PED 2014/68/EU; EN 10028-7/16; EN 10088-2/14; ASTM A 240M/17; ASME SA240/17; EN ISO 9445/10

Coil No	Heat No	Weight (kg)	Std	Chemical analysis (%)											
				C	Mn	Si	P	S	Cr	Ni	Mo	Ti	N	Cu	Al
ON23/117-194053	91788	1720.000		0.028	0.870	0.530	0.037	0.0010	16.700	10.500	2.020	0.340	0.010	xxxx	xxxx
ON23/117-194053	91788	1189.000		0.028	0.870	0.530	0.037	0.0010	16.700	10.500	2.020	0.340	0.010	xxxx	xxxx

Surface and dimensional control, material identity test, intercrystalline corrosion acc. to DIN EN ISO 3651-2: O.K.

Extent of delivery				Test Results											
Coil No	Dimensions (mm)	Pallet No	Packing List No	Test No	Pos	Std	0.2%Y Str (N/mm2)	1%Y Str (N/mm2)	T/S (N/mm2)	Elong (A80%)	Elong (A50%)	Elong (A10%)	HRB	Bending Test	Grain Size
ON23/117-194053	0.30 X 1000 Slit	1000502520;1000502521 1000502522;1000502523	42121534	703 704	T B		274.0 273.0	302.0 301.0	601.0 601.0	60.5 61.0	61.5 62.0	xxxx xxxx	76.5 76.5	xxxx xxxx	xxxx xxxx
ON23/117-194053	0.30 X 1000 Slit	1000502576;1000502577 1000502578	42121534	703 704	T B		274.0 273.0	302.0 301.0	601.0 601.0	60.5 61.0	61.5 62.0	xxxx xxxx	76.5 76.5	xxxx xxxx	xxxx xxxx

Heat treatment: 1100 °C/ H2 Convection cooling

T = Top B = Bottom Sample direction: transversal

013543

Delivered product is in conformity with order requirements.
Marking: Producer Trade Mark, Material, Heat No.,Coil-No.

IL-CQ-1 Targoviste,11.09.2019

WORK INSPECTOR
MOISE VIOLETA

C 30

Issued in agreement with TÜV SÜD Industrie Service

SHS

STAHLVERARBEITUNG GMBH
CNC - ZERSPANUNGSTECHNIK

Zubehör für den Apparatebau
Flansche - Biegeteile
Blinddeckel - Rohrplatten
Schweißkonstruktionen
Mechanische Werkstatt

SHS Stahlverarbeitung • Liebenscheider Str. 39 • 57299 Burbach

HKS GMBH
Hersteller von Kompensatoren und Schläuchen
Schonenfahrerstraße 1

D - 18057 Rostock

Umstempelungsbescheinigung

Datum: 26.08.21
Seite 1

Auftrag-Nr.: **49742**
Ihre Bestellnr.: **B/4107353 v. 15.07.21**

Hiermit bescheinigen wir, daß die unter vorgenannter Nummer gelieferten Teile aus Material gemäß dem beigefügten Zeugnis gefertigt wurden.

Menge	Abmessung(en)	Werkstoff, Abnahme DIN 50049 / EN 10204	Stempelung Schmelze-Nr.	Probe-Nr.	Stempel
20	Ovalflansche DN40 PN16 b = 16 mm, li. Ø = 55 mm	1.4571	312385	2031151501	2

Maßprüfung nach: DIN EN 1092-1:2008-09

Besichtigung: ohne Beanstandung

Zum Zeichen der erfolgten Prüfung und ordnungsgemäßen Umstempelung wurden die Teile mit unserem Stempel versehen:

Mit der Prüfung der Umstempelung beauftragt: Tobias Löhl (2)

Das Umstempeln erfolgt mit Zustimmung der TÜV Nord Systems, Auftrag-Nr.: 8108776542 vom 20.02.2012, verlängert mit Aktenzeichen 8118492568 vom 21.09.2020

SHS-Stahlverarbeitung GmbH
Der Beauftragte:

(T.Löhl (2))

SHS

SHS Stahlverarbeitung GmbH•Liebenscheider Str. 39•D-57299 Burbach•Fon 02736/2254•Fax 02736/2379•eMail: shs@hoechst-gruppe.de•www.hoechst-gruppe.de/shs

Bankverb. / bank details.	Volksbank Freudenberg	Sparkasse Burbach Neunkirchen
SWIFT-Code	GENODEM1FRF	WELADED1BUB
IBAN	DE24 4606 1724 0241 9104 01	DE79 4605 1240 0002 0004 79

Geschäftsführer: Uwe Heine, Helmut Höchst • Sitz der Gesellschaft: 57299 Burbach • AG Siegen HRB 2836 • USt-IdNr.: DE 126 573 136

013816

29195

sij | acroni

Izdajatelj Certifikata:
Originator of Inspection Document:
Aussteller der Bescheinigung:

10134693-20025393-133254

SIJ ACRONI, d.o.o.
KRT-KAKOVOST
Cesta Borisa Kidriča 44
SI – 4270 Jesenice
Slovenia, EU

Tel.: +386 4 584 10 16
Fax: +386 4 584 10 71
E-Mail: gorazd.kosec@acroni.si
W: http://www.acroni.si

Prevzemni certifikat 3.1 / Inspection Certificate 3.1 / Abnahmeprüfzeugnis 3.1 EN 10204:2004 Št. dokumenta / Document No. / Bescheinigungs Nr. **10134693-20025393-133254** z / dated / vom **17.02.2020**	Prejemnik / Consignee / Empfänger
Kupčeva št. naročila / Purchaser's order No. / Kundenbestell Nr. **4781**	Proizvajalčeva št. naročila / Manufacturer's works order No. / Werksauftrag Nr. **20025393** z / dated / vom **06.01.2020**
Št. Dobavnega lista / Packing list No. / Lieferschein Nr. **10134693** z / dated / vom **17.02.2020**	Kupčeva št. izdelka / Purchaser Article No. / Artikel Nr. des Kunden
Št. Računa / Account No. / Kontonummer **2020101003311**	Datum izdaje / Date of issue / Ausgabedatum **17.02.2020**

Izdelek / Product / Erzeugnis
DEBELA PLOČEVINA / HOT ROLLED PLATE / WARMGEWALZTES GROBBLECH **SINOXX 4571**

Zahteve / Requirements / Anforderungen	Oznaka jekla / Steel designation / Stahlbezeichnung	
EN 10028-7:2016	**1.4571**	**X6CrNiMoTi 17-12-2**
EN 10088-2:2014	**1.4571**	**X6CrNiMoTi 17-12-2**
EN 10088-4:2009	**1.4571**	**X6CrNiMoTi 17-12-2**
AD 2000-Merkblatt W 0:2016		
AD 2000-Merkblatt W 10:2016		
AD 2000-Merkblatt W 2:2016		
ASME SA-240/SA-240M; BPVC.II.A-2017		**316Ti**
ASTM A 240/A 240M-17		**316Ti**
PED-2014/68/EU		
Customer Grade		**WARMGEWALZTE ROSTFREIEBLECHE W.NR. 1.4571**

Specifikacija kupca / Customer specification No. / Kundenspezifikation
Dodatne zahteve / Suplementary requirements / Zusätzliche anforderung
Dobavno stanje / Product delivery condition / Lieferzustand des Erzeugnisses
TOPILNO ŽARJENO, LUŽENO / SOLUTION ANNEALED, PICKLED / LÖSUNGSGEGLÜHT, GEBEIZT
Stanje površine / Surface finish / Oberflächenbehandlung
ASME Finish:No. 1 - on both sides
ASTM Finish:No. 1 - on both sides
EN Surface:1D - on both sides
EN10163:B3

Oznake izdelka / Marking of the product / Kennzeichnung des Erzeugnisses

Znak proizvajalca Manufacturer's mark Zeichen des Herstellers	Oznaka jekla Steel designation Stahlbezeichnung	Št. plošče Plate No. Tafel Nr	Št. sarže Heat No. Schmelzen Nr.	Dimenzije izdelka Product dimensions Abmessungen des Erzegniss	Žig kontrolorja Stamp of the works inspector Stempel des Werkssachverständigen	Žig prevzemalca Stamp of the inspection representative Stempel des Abnahmebeauftragten
SIJ I ACRONI					KK 4.	

Dodatne Oznake / Other marks / Andere Kennzeichen

To potrdilo, ki ga izdajamo z uporabo poslovno-informacijskega sistema, je v skladu EN 10204, ods.5 in velja brez podpisa.
Diese Bescheinigung wurde durch ein geeignetes Datenverarbeitungs-system erstellt und ist gemaess EN 10204, abs.5 ohne Unterschrift gueltig.
This Certificate has been issued by a qualified Electronic Data System and is valid acc. to EN 10204, para.5 without Signature.
Odgovorna oseba/Werkssachverstaendiger/Works Expert: Gorazd Kosec

013816

sij acroni

Izdajatelj Certifikata:
Originator of Inspection Document:
Aussteller der Bescheinigung:

10134693-20025393-133254

SIJ ACRONI, d.o.o.
KRT-KAKOVOST
Cesta Borisa Kidriča 44
SI – 4270 Jesenice
Slovenia, EU

Tel.: +386 4 584 10 16
Fax: +386 4 584 10 71
E-Mail: gorazd.kosec@acroni.si
W: http://www.acroni.si

Obseg dobave / Extent of material delivery / Umfang der Lieferung

Poz. Item. Pos.	Št. Sarže Heat No. Schmelzen Nr.	Št. plošče Plate No. Tafel Nr.	Teoretična teža Mass Masse (kg)	Teža neto Actual mass Ist Masse (kg)	Dimenzije izdelka Product dimension Maße des Erzeugnises (mm)	Št. kosov No. of pieces Stückzahl	Št. vzorca Sample No. Probe Nr.
3	312456	2031191601	1344,00	1344,00	12,000 /2000 /7000	1	2031191601
3	312456	2031191602	1344,00	1344,00	12,000 /2000 /7000	1	2031191601
3	312456	2031191603	1344,00	1344,00	12,000 /2000 /7000	1	2031191601
3	312456	2031191701	1344,00	1344,00	12,000 /2000 /7000	1	2031191601
5	312385	2031151501	1792,00	1792,00	16,000 /2000 /7000	1	2031151501
5	312385	2031151502	1792,00	1792,00	16,000 /2000 /7000	1	2031151501

Način izdelave jekla / Steelmaking process / Stahlherstellungsverfahren **E + VOD**

Pogoji toplotne obdelave / Heat treatment details / Wärmebehandlung Details
HEAT TREATMENT: SOLUTION ANNEALED AT 1070°C, HOLDING TIME 30 minutes, WATER QUENCHED
TOPLOTNA OBDELAVA: TOPILNO ŽARJENO PRI 1070°C, ČAS OGREVANJA 30 minut, GAŠENO VODA
WARMBEHANDLUNG: LOSUNGSGLUHEN BEI 1070°C, HALTEDAUER 30 Minuten, WASSER ABGESCHRECKT
Lot Numbers : 2031191601, 2031191602, 2031191603, 2031191701
HEAT TREATMENT: SOLUTION ANNEALED AT 1070°C, HOLDING TIME 40 minutes, WATER QUENCHED
TOPLOTNA OBDELAVA: TOPILNO ŽARJENO PRI 1070°C, ČAS OGREVANJA 40 minut, GAŠENO VODA
WARMBEHANDLUNG: LOSUNGSGLUHEN BEI 1070°C, HALTEDAUER 40 Minuten, WASSER ABGESCHRECKT
Lot Numbers : 2031151501, 2031151502

To potrdilo, ki ga izdajamo z uporabo poslovno-informacijskega sistema, je v skladu EN 10204, ods.5 in velja brez podpisa.
Diese Bescheinigung wurde durch ein geeignetes Datenverarbeitungs-system erstellt und ist gemaess EN 10204, abs.5 ohne Unterschrift gueltig.
This Certificate has been issued by a qualified Electronic Data System and is valid acc. to EN 10204, para.5 without Signature.
Odgovorna oseba/Werkssachverstaendiger/Works Expert: Gorazd Kosec

013816

sij | acroni

Izdajatelj Certifikata:
Originator of Inspection Document
Aussteller der Bescheinigung:

10134693-20025393-133254

SIJ ACRONI, d.o.o.
KRT-KAKOVOST
Cesta Borisa Kidriča 44
SI – 4270 Jesenice
Slovenia, EU

Tel.: +386 4 584 10 16
Fax: +386 4 584 10 71
E-Mail: gorazd.kosec@acroni.si
W: http://www.acroni.si

Mehanske lastnosti pri sobni temperaturi / Mechanical properties at room temperature / Mechanische Eigneschaften bei Raumtemperatur

St. sarže Heat No. Schmelzen Nr.	St.vzorca Sample No. Probe Nr.	Smer vzorca Sample orientation Proben lage			Meja plastičnosti Yield or proof strength Streck- oder Dehngrenze (MPa)		Nat. trdnost Tensile str. Zugfestigkeit (MPa)	Zg. meja plastičnosti Upper Yield strenght Obere Streckgrenze (MPa)	Kontrakcija Reduction of area Brucheinschnürung (%)	Raztezek Elongation Bruchdehnung (%)			Razmerje Ratio Beziehung	Trdota Hardness Härte
		T/L	T/B	1/2; 1/3; 1/4; S2	Rp0,2	Rp1,0	Rm	Reh	Z	A5	A50	A80	Rp/Rm	HBW
Zahteve Requirements Anforderung	MIN				220,0	260,0	520,0			40,0	40,0			
	MAX						670,0							217
312385	2031151501	T	T	S2	241,0	279,0	556,0			48,5	51,5			152
312456	2031191601	T	T	S2	239,0	282,0	560,0			54,5	57,0			163

T- Prečno / Transverse / Quer L- Vzdolžno / Longitudinal / Langs T- Glava / Top / Kopf B- Noga / Bottom / Fuss
1/2 - Odvzem vzorca na sredini / Taking the sample at the center of product / Unter der Probe in der Mitte des Produkt
1/3 - Odvzem vzorca po deb 1/3 pod površino / Thickness 1/3 under the surface / Dicke 1/3 unter der Oberfläche
1/4 - Odvzem vzorca po deb 1/4 pod površino / Thickness 1/4 under the surface / Dicke 1/4 unter der Oberfläche
S2- Odvzem vzorca po deb 2 mm pod površino / Thickness 2 mm under the surface / Dicke 2 mm unter der Oberfläche

Prekus udarna žilavost / Charpy impact test / Kerbschlagbiegeversuch (J)

St. sarže Heat No. Schmelzen Nr.	St. vzorca Sample No. Probe Nr.	Test temperature Temperature Prüftemperature (°C)	Smer vzorca Sample orientation Proben lage			Posamezne vrednosti Individual values Einzelwerte (J)			Povprečje Mean value Mittelwert (J)
		T	T/L	T/B	1/2; 1/3; 1/4; S2	1	2	3	
Zahteve Requirements Anforderung	MIN					60	60	60	60
	MAX	20							
312385	2031151501	20	T	T	S2	323	324	347	331
312456	2031191601	20	T	T	S2	332	313	342	329

T- Prečno / Transverse / Quer L- Vzdolžno / Longitudinal / Langs T- Glava / Top / Kopf B- Noga / Bottom / Fuss
1/2 - Odvzem vzorca na sredini / Taking the sample at the center of product / Unter der Probe in der Mitte des Produkt
1/3 - Odvzem vzorca po deb 1/3 pod površino / Thickness 1/3 under the surface / Dicke 1/3 unter der Oberfläche
1/4 - Odvzem vzorca po deb 1/4 pod površino / Thickness 1/4 under the surface / Dicke 1/4 unter der Oberfläche
S2- Odvzem vzorca po deb 2 mm pod površino / Thickness 2 mm under the surface / Dicke 2 mm unter der Oberfläche

To potrdilo, ki ga izdajamo z uporabo poslovno-informacijskega sistema, je v skladu EN 10204, ods.5 in velja brez podpisa.
Diese Bescheinigung wurde durch ein geeignetes Datenverarbeitungs-system erstellt und ist gemaess EN 10204, abs.5 ohne Unterschrift gueltig.
This Certificate has been issued by a qualified Electronic Data System and is valid acc. to EN 10204, para.5 without Signature.
Odgovorna oseba/Werkssachverstaendiger/Works Expert: Gorazd Kosec

013816

sij acroni

Izdajatelj Certifikata:
Originator of Inspection Document:
Aussteller der Bescheinigung:

10134693-20025393-133254

SIJ ACRONI, d.o.o.
KRT-KAKOVOST
Cesta Borisa Kidriča 44
SI – 4270 Jesenice
Slovenia, EU

Tel.: +386 4 584 10 16
Fax: +386 4 584 10 71
E-Mail: gorazd.kosec@acroni.si
W: http://www.acroni.si

Kemijska Analiza/Chemical Composition/Chemische Zusammensetzung

Št. Sarže/ Heat No./ Schmelzen Nr.				312385						
%C	%Si	%Mn	%P	%S	%Cr	%Ni	%Mo	%Ti	%N	%Co
0,028	0,459	1,833	0,034	0,0004	17,09	10,68	2,134	0,269	0,0170	0,171

Kemijska Analiza/Chemical Composition/Chemische Zusammensetzung

Št. Sarže/ Heat No./ Schmelzen Nr.				312456						
%C	%Si	%Mn	%P	%S	%Cr	%Ni	%Mo	%Ti	%N	%Co
0,041	0,419	1,815	0,033	0,0007	17,00	10,67	2,111	0,376	0,0160	0,159

Kontrola oznak, identifikacije, površine, oblike in dimenzij / Control of marking and identification, surface appearance, shape and dimensional properties/ Prüfung von Kennzeichnung, Identifizierung, Oberfläche, Form und Maße :
ASME SA 480 Ed.2017 OK
ASTM A480/A480M-17 OK
EN ISO 18286:2010 Flatness Class N OK
EN ISO 18286:2010 Thickness: OK OK
EN ISO 18286:2010 Width/Length Class B OK
EN 10029:1991 Flatness Class N OK
EN 10029:1991 Thickness Class B OK
EN 10029:1991 Width/Lenght : OK OK

Preizkus odpornosti na korozijo / Corrosion test / Korrosion test
Št. vzorca / Sample No. / Probe Nr. : **2031151501, 2031191601**
Interkristalna korozija po A262-E: OK / Intergranular corrosion test acc.A262-E: OK / Interkristalline Korrosion nach A262-E: OK
Interkristalna korozija po ISO-3651-2-A: OK / Intergranular corrosion test acc.ISO-3651-2-A: OK / Interkristalline Korrosion nach ISO-3651-2-A: OK

Sulfide Stress Cracking Resistance v skladu z NACE MR0103: OK / ISO 17945: OK /Sulfide Stress Cracking Resistance in accordance with NACE MR0103: OK / ISO 17945: OK
Cracking resistance in accordance with ANSI/ NACE MR0175/ISO 15156-3: OK / Cracking resistance nach ANSI/ NACE MR0175/ISO 15156-3: OK

To potrdilo, ki ga izdajamo z uporabo poslovno-informacijskega sistema, je v skladu EN 10204, ods.5 in velja brez podpisa.
Diese Bescheinigung wurde durch ein geeignetes Datenverarbeitungs-system erstellt und ist gemaess EN 10204, abs.5 ohne Unterschrift gueltig.
This Certificate has been issued by a qualified Electronic Data System and is valid acc. to EN 10204, para.5 without Signature.
Odgovorna oseba/Werkssachverstaendiger/Works Expert: Gorazd Kosec

013816

sij | acroni

Izdajatelj Certifikata:
Originator of Inspection Document:
Aussteller der Bescheinigung:

10134693-20025393-133254

SIJ ACRONI, d.o.o.
KRT-KAKOVOST
Cesta Borisa Kidriča 44
SI – 4270 Jesenice
Slovenia, EU

Tel.: +386 4 584 10 16
Fax: +386 4 584 10 71
E-Mail: gorazd.kosec@acroni.si
W: http://www.acroni.si

Opombe / Remarks / Bemerkungen

Potrjujemo da dobavljeni izdelki ustrezajo zahtevam naročila / We confirm herewith that the delivered products comply with the purchase order / Es wird bestätigt, daß die Erzeugnisse den Bestellanforderungen entsprechen
Država porekla = Država izdelave taline = Država izdelave slaba - SLOVENIJA – EU / Country of Origin = Country of melt = Country of slab: SLOVENIA – EU / Herkunftsland = Land der schmelze = Land der Bramme – SLOVENIA – EG
Material ni kontaminiran z Živim srebrom. / Free from Known Contamination with Mercury. / Keine kontamination mit Quecksilbe.
Material je skladen z RoHS direktivo. Podrobnosti na: http://www.acroni.si/en/data/files/1370588262.pdf/ Material fully comply with RoHS directive, Details on: http://www.acroni.si/en/data/files/1370588262.pdf / Material ausgestattet mit RoHS-Richtlinien, Einzelheiten auf: http://www.acroni.si/en/data/files/1370588262.pdf

Sistem vodenja kakovosti je certificiran po ISO 9001. Št. Certifikata: 12 100 6200 TMS. Izdajatelj: TÜV SÜD Management Service GmbH. / Quality Management System is certified according to ISO 9001. Certificate no. 12 100 6200 TMS, issued by TÜV SÜD Management Service GmbH. / Qualitätsmanagementsystem zertifiziert nach ISO 9001. Zertifikat Nr. 12 100 6200 TMS der TÜV SÜD Management Service GmbH.

Izdano v soglasju s TÜV Bayern e.V. (08/1965) / Issued in agreementwith TÜV Bayern e.V. (08/1965) / AusgestelltimEinvernehmen mit dem TÜV Bayern e.V. (08/1965)/ В порядке, согласованном с TÜV Bayern e. V. (08/1965).

Sopodpisovanje s strani TÜV Bayern Sachsen e. V. ni potrebno (dopis z dne 20.06.1996). / Gegenzeichnungsverzicht durch TÜV Bayern Sachsen e. V. mit Schreiben vom 20.06.1996. / Waiving of countersigning by TÜV Bayern Sachsen e. V. dated 20 June 1996.

Potrjen sistem kakovosti v skladu s PED, priloga I, točka 4.3 s strani priglašenega organa 0036 (oktober 2002) (certifikat št. DGR-0036-QS-W 22-A/2002/MUC). / QS approved acc. to PED, Annex I, Para. 4.3 by Notified Body 0036 (October 2002) (Certification No. DGR-0036-QS-W 22-A/2002/MUC). / QS entsprechend DGRL, Anhang I, Absatz 4.3 von NotifiedBody 0036 überprüft (Oktober 2002) (Zertifizierungs-Nr. DGR-0036-QS-W 22-A/2002/MUC).

Meritve sevanja: NI RADIOAKTIVNEGA ONESNAŽENJA / Measuring Radiation: NO RADIOACTIVE CONTAMINATION / messen: KEINE ERHÖHTE RADIOAKTIVITÄT

Spektrometerska analiza PMI v skladu API RP 578: OK / Spectrometer Sorting Test PMI according API RP 578: OK / Spektrometer Sortiertest PMI nach API RP 578: OHNE BEANSTANDUNG

Vizualni pregled: OK / Visual inspection: OK / Sichtprüfung: OHNE BEANSTANDUNG

Priloga / Annex / Anbau :
Priloga / Annex / Anbau: 1: CE znak / CE marking / CE-Kennzeichnung

To potrdilo, ki ga izdajamo z uporabo poslovno-informacijskega sistema, je v skladu EN 10204, ods.5 in velja brez podpisa.
Diese Bescheinigung wurde durch ein geeignetes Datenverarbeitungs-system erstellt und ist gemaess EN 10204, abs.5 ohne Unterschrift gueltig.
This Certificate has been issued by a qualified Electronic Data System and is valid acc. to EN 10204, para.5 without Signature.
Odgovorna oseba/Werkssachverstaendiger/Works Expert: Gorazd Kosec

013816

A.13 Safety valve

Name	Data
Designation	Safety valve
Type	0637
Number	
Type of manual	*Technical documentation*
Manufacturer	HEROSE GMBH Armaturen und Metalle

A.13.1 Operating instructions

Operating and Installation Instructions

Direct Loaded Safety Valves, permitted acc. to AD - A2, TÜV - SV 100, with lifting device

HEROSE

GB

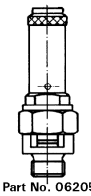

Part No. 06205

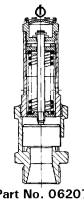

Part No. 06207

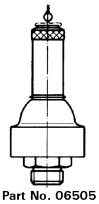

Part No. 06505

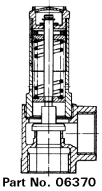

Part No. 06370
Part No. 06376
Part No. 06380

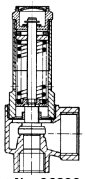

Part No. 06390
Part No. 06391

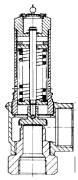

Part No. 06395

Table of Contents

1.0 **General Information on Operating Instructions** 2
2.0 **Notes on Possible Dangers** 2
2.1 Significance of Symbols 2
2.2 Safety Related Definitions 2
2.3 Qualified Personnel 2
3.0 **Handling** 2
3.1 Storage 2
3.2 Transport 2
3.3 Handling before Installation 3
4.0 **Description** 3
4.1 Scope of Application 3
4.2 Definitions 3
4.3 Marking of Permitted Safety Valves 3
5.0 **Installation** 3
5.1 Basic Notes on Installation 3
5.2 General Notes on Installation 3
6.0 **Lifting Device** 4
6.1 Operation Testing of Lifting Device 4
7.0 **Maintenance** 4
8.0 **Dismantling the Valve** 4
9.0 **Repairs** 4
10.0 **Warranty** 4

Operating and Installation Instructions

1.0 General Information on Operating Instructions

These operating instructions contain the necessary information to install and operate the valve both safely and effectively.
If problems arise which cannot be solved with the aid of these operating instructions, please contact the supplier/manufacturer for further information. These operating instructions comply with the applicable EN safety standards as well as regulations and codes of practice applicable in the Federal Republic of Germany. If the valve is used outside the Federal Republic of Germany, the operator or the person responsible for the system design must ensure that valid national codes of practice are complied with. The manufacturer reserves all rights to implement technical modifications and improvements at any time. The use of these operating instructions assumes the user is qualified as described under Section 2.3 "Qualified Personnel".
The operating personnel must be instructed in accordance with the operating instructions.

2.0 Notes on Possible Dangers

2.1 Significance of Symbols

⚠ Warning of general danger

2.2 Safety Related Definitions

The signal definitions DANGER, WARNING, CAUTION and NOTE are used in these operating instructions as indications for particular hazards or for information requiring special signs.

DANGER means that if the relevant information is disregarded, there is a danger of fatal injury and / or considerable damage to property can occur.

WARNING means that if the relevant information is disregarded, there is a danger of serious injury and / or damage to property can occur.

CAUTION means that if the relevant information is disregarded, there is a danger of serious injury and / or damage to property can occur.

NOTE means that particular attention must be paid to certain technical aspects.

All other information not specifically emphasised such as transport, installation, operating and maintenance instructions as well as technical data (in the operating instructions, product documentation and on the device itself) must also be complied with to the fullest extent in order to avoid faults which in turn can cause serious injury to persons or damage property.

2.3 Qualified Personnel
The term "qualified personnel" relates to persons who are familiar with the installation, assembly, start up and operation of the product and have the qualification corresponding to their responsibilities. Such as:
Instruction and awareness to comply with all operational, regional and in-company regulations and requirements;
Training or instruction in accordance with safety technology standards with regard to the upkeep and use of appropriate safety and work protection equipment; First aid training, etc.
(see TRB 700)

3.0 Handling

3.1 Storage
- Storage temperature -20°C to +65°C dry, free of dirt.
- A desiccant or heating to prevent condensation is necessary in damp rooms.

3.2 Transport
- Transport temperature -20°C to +65°C.
- Protect against external force (impact, vibration etc.).

3.3 Handling before Installation
- If flange covers are fitted, remove shortly before installation.
- Protect against atmospheric conditions e.g. wetness (use a desiccant)!
- Correct handling protects against damage.

Operating and Installation Instructions

4.0 Description

4.1 Scope of Application
Safety valves are safety devices on pressure vessels for protection against excessive pressure.

Type	Size	Pressure range	Temperature	Medium
06205	G1/4-G1/2 (d_1 = 7)	0,2 bar-25 bar	-10°C-+160°C	non-toxic vapours and gases
	G1/2 (d_1 = 12)	0,2 bar-22 bar	-10°C-+120°C	
	G1	0,2 bar-18 bar	-10°C-+120°C	
	G3/4-G2	0,2 bar-16 bar	-10°C-+120°C	
06207	G1/2	0,2 bar-25 bar	-10°C-+200°C	non-toxic vapours and gases
	G3/4 & G1	0,2 bar-20 bar	-10°C-+200°C	
	G11/4-G2	0,2 bar-16 bar	-10°C-+200°C	
06505	G1-G11/2	0,5 bar-4,5 bar	-25°C-+150°C	liquid, grained or powder form products
	G2	0,5 bar-3,5 bar	-25°C-+150°C	
06370		1,0 bar-16 bar	-10°C-+110°C	non-viscous liquids (no vaporizing
06376		1,0 bar-16 bar	-10°C-+110°C	during the blow-off process)
06380	G1/2-G11/4	0,2 bar-20 bar	-10°C-+185°C	vapours and gases
	G11/2-G2	0,2 bar-16 bar	-10°C-+185°C	
06390		0,2 bar-25 bar	-10°C-+225°C	vapours and gases
06391		8,0 bar-28 bar	-40°C-+150°C	vapours and gases
06395	G1/2-G1	0,5 bar-25 bar	-10°C-+225°C	vapours and gases
	G11/4	0,5 bar-12 bar	-10°C-+225°C	

NOTE: The medium will not damage the wetted parts of the safety valve. If in doubt contact the manufacturer.

4.2 Definitions
Set Pressure: The set pressure is the gauge pressure at which under operating conditions direct loaded safety valves commence to lift.

Test Pressure: The test pressure is the gauge pressure at which under test stand conditions (atmospheric back pressure) direct loaded safety valves commence to lift.

Opening Pressure: The opening pressure is the gauge pressure at which the lift is sufficient to discharge the predetermined flowing capacity; it is equal to the set pressure plus opening pressure difference.

Reseating Pressure: The reseating pressure is the gauge pressure at which the direct loaded safety valve re-seats.
For detailed definitions see DIN 3320.

4.3 Marking of Permitted Safety Valves

TÜV SV 99 xxx xx D/G/F 0,xx x

TÜV-Sign
Safety Valve
Year of type test approval
Number of type test
Flow diameter d0
on the inlet size in mm

Set pressure p in bar
Coefficient of discharge
Application mark:
D suitable for vapours
G suitable for gases
F suitable for fluids
F/K/S suitable for liquid, grained or powder form products
H suitable for hot water

5.0 Installation ⚠

5.1 Basic Notes on Installation
Spring loaded safety valves should be installed with the bonnet vertically upwards, considering the direction of flow. The minimum diameter of the pipe prior to the safety valve must be a minimum of the d_1 of the safety valve. Safety valves must be installed so that the vented medium can not injure people or damage properties. Safety valves should be installed in such a way that no inadmissible static, dynamic or thermal loads can be transmitted to the valve, if this is the case then these factors must be catered for in the installation. Between the safety valve and the pressure equipment no valve or fitting should be installed. Should the relief valve outlet be fitted with a

Operating and Installation Instructions

discharge pipe this must not be less than the relief valve outlet diameter or be fitted with any other components that can restrict the discharge flow. The relief valve outlet or discharge pipe must be located in a safe area. The discharge pipes must not be installed where it will allow any of the venting medium to collect. (see also AD-Merkblatt A 2).

5.2 General Notes on Installation

The following points should be taken into account besides the basic notes on installation:
- Visual checking of marking (see 4.3) concerning application and set pressure
- Visual checking concerning outer damage. Damaged valves should be not installed
- Remove protecting cap if present
- Care must be taken should the components become hot during the installation of the valve. Operating personnel must be instructed
- The space inside the valve and the pressure vessel must be free of any foreign products.
- When installing safety valves with threaded connections, use metal or plastic seal washers only acc. to DIN 7603

CAUTION: Seal materials such as seal tape or liquid seal material should not be used as this type of material can break off and enter the valve causing it to leak.

- Only use suitable tools for installing of safety valves
CAUTION: The torque must be correct to avoid any damages.

6.0 Lifting Device
It shall be possible to lift safety valves at a pressure ≥ 85% of set pressure using the lifting device. For this the safety valves are provided with this device, which consists of a turning screw placed at the top of the bonnet.

6.1 Operation testing of Lifting Device ⚠
On the first installation or after interruptions or for operation testing acc. to AD-Merkblatt A 2 Abs. 4.7 the following steps are to be carried out (see Illustr. 1):

Step 1: Turn the lifting screw anti-clockwise until a clear discharge of the medium is audible.
CAUTION: Do not turn the lifting screw too far.
Step 2: Turn the lifting screw clockwise till the limit stop.

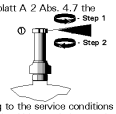

Now the valve is **ready for operation.**

7.0 Maintenance
Maintenance and maintenance-intervals have to be defined by the operator according to the service conditions (see TRB 600 und AD-Merkblatt A 2). The operation testing of lifting device acc. to 6.1 should be carried out at least monthly in addition to the above mentioned reasons.

8.0 Dismantling the Valve ⚠
The following points must be observed beside the general principal rules and TRB 700 governing the assembly work:
- pressureless pipe system
- medium must be cool
- plant must be drained
- purge piping system in case of aggressive or caustic media
- have assembly work performed only by qualified personnel (see point 2.3)

9.0 Repairs ⚠
Repairs on safety valves can only be carried out by company HEROSE or authorized HEROSE workshops, revied by official licenced authorities.

10.0 Gaurantee
The extent and period of warranty cover are specified in the "sales conditions of HEROSE GMBH" valid at the time of delivery or, by notice in supplied documentation, in the contract of sale itself. In any case, however, the legally stipulated warranty period of 6 months shall apply.
No warranty claims can be made for any damage caused as the result of incorrect handling, disregard of operating and installation instructions, accident prevention regulations, EN, DIN, VDE standards and other applicable codes of practice.

Edition 10/2000-GB

HEROSE GMBH
ARMATUREN UND METALLE
Elly-Heuss-Knapp Str. 12
D-23843 Bad Oldesloe
Tel. 04531/509-0
Fax 04531/509120

A.13.2 Data sheets

Safety Valves
Type 06370

HEROSE

Safety Valves, angle type, bronze, type tested TÜV-SV.749. L

Standard safety valve
with soft valve seal for fluids, open bonnet,
with diaphragm for protection of the spring, with lifting device
In- and outlet: female thread type G (BSPP) acc. to ISO 228/1

Part No. 06370.X.0000 with NBR valve seal
Part No. 06370.X.0700 with FPM valve seal

Pressure range in bar:	**NBR**	**FPM**		**NBR**	**FPM**
Nom. size 1/2":	1.0 - 11.0	1.0 - 16.0	**Nom. size 3/4":**	1.0 - 10.5	1.0 - 16.0
Nom. size 1":	1.0 - 10.0	1.0 - 16.0	**Nom. size 1-1/4":**	1.0 - 9.0	1.0 - 16.0
Nom. size 1-1/2":	1.0 - 8.5	1.0 - 16.0	**Nom. size 2":**	1.0 - 9.0	1.0 - 16.0

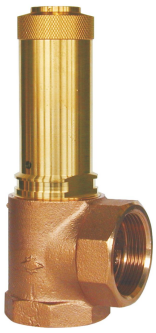

Available options - on request only:
· stainless steel spring - material 1.4571
· external parts nickel plated

Applications:
Provided as safety device for protection against excessive pressure in gas cylinders and pressure vessels.
Approved for non-adhesive fluids, which are not vaporized during blow off.
Working temperature: -10°C / +14°F (263K) up to +110°C / +230°F (383K), suitable for horizontal installation

Materials		**DIN EN**	**ASME/ASTM**
1	Body	CC491K	B 62 UNS C83600
2	Disc nut	CW614N	B 249 UNS C38500
3	Plate	CW507L	B 36 UNS C26800
4	Valve seal	NBR or FPM	
5	Disc	CW614N	B 249 UNS C38500
6	Diaphragm	NBR	
7	Stem	CW614N	B 249 UNS C38500
8	Bonnet	CW614N	B 249 UNS C38500
9	Spring	1.1200	A 227
10	Lifting device	CW614N	B 249 UNS C38500
11	Closing cap	CW507L	B 36 UNS C26800

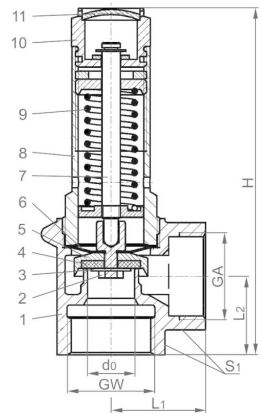

Essential: Valves are delivered at a set pressure, therefore when ordering please confirm set pressure, medium and temperature.

Standard marking acc. to Pressure Equipment Directive 2014/68/EU (PED). CE

Type 06370	**Technical data**						
Nominal size	**GW**	**1/2**	**3/4**	**1**	**1-1/4**	**1-1/2**	**2**
Orifice	d_0	12	15	18	20	24	28
Dimension code	.X.	0400	0600	1000	1200	1400	2000
Set pressure range	bar	1.0-16	1.0-16	1.0-16	1.0-16	1.0-16	1.0-16
Outlet	GA	1/2	3/4	1	1-1/4	1-1/2	2
Height	H	92	111	132	152	175	200
Length	L_1	25	30	36	40	48	56
Length	L_2	20	25	30	35	40	48
Wrench size across flats	S_1	27	32	41	50	58	70
Weight	ca. kg	0.24	0.40	0.70	1.07	1.65	2.65
Coeff. of discharge	α_w	0.20	0.25	0.31	0.39	0.42	0.38

Dimensions in mm.

HEROSE GMBH Phone +49 4531 509-0 Fax +49 4531 509 120 info@herose.com www.herose.com

Edition 2017-10

Safety Valves
Type 06370

Discharge capacities
Calculation of flow rate acc. to AD2000-Merkblatt A2

Medium:
Water in kg/h at 20°C

The capacity indicated below is for a fully opened valve.

d_0 - orifice
A_0 - flow area

Set pressure in bar (g)	GW	1/2	3/4	1	1-1/4	1-1/2	2
	d_0(mm)	12.0	15.0	18.0	20.0	24.0	28.0
	A_0(mm^2)	113.1	176.7	254.5	314.2	452.4	615.8
	Medium	**Water**					
1.0		1207	2359	4212	6542	10146	12494
2.0		1708	3336	5957	9252	14348	17670
3.0		2092	4086	7296	11332	17573	21641
4.0		2415	4718	8424	13085	20292	24989
5.0		2700	5275	9419	14629	22687	27938
6.0		2958	5778	10318	16025	24852	30605
7.0		3195	6241	11145	17310	26843	33057
8.0		3416	6672	11914	18505	28697	35340
9.0		3623	7077	12637	19627	30438	37483
10.0		3819	7460	13320	20689	32084	39511
12.0		4184	8172	14592	22664	35146	43282
14.0		4519	8826	15761	24480	37962	46750
16.0		4831	9436	16849	26170	40584	49978

HEROSE GMBH Phone +49 4531 509-0 Fax +49 4531 509 120 info@herose.com www.herose.com

Edition 2017-10

A.14 Flowmeter

Name	Data
Designation	Flowmeter
Type	H250 M40
Number	
Type of manual	*Technical documentation*
Manufacturer	KROHNE Messtechnik GmbH

Place of installation	TAG No.	Link
Blower oil system	3.5.5.X31	
Gearbox oil system 50 L	3.5.5.X51	linktarget doesn't exist but @y.link.required='true'
Gearbox oil system100 L	3.5.5.X51	linktarget doesn't exist but @y.link.required='true'

A.14.1 Operating instructions

H250 M40 Handbook

Variable area flowmeter
with 3W2 angular position transmitter

© KROHNE 02/2019 - 4007518701 - MA H250-M40 KINAX 3W2 R01 en

KROHNE

IMPRINT

All rights reserved. It is prohibited to reproduce this documentation, or any part thereof, without the prior written authorisation of KROHNE Messtechnik GmbH.

Subject to change without notice.

Copyright 2019 by
KROHNE Messtechnik GmbH - Ludwig-Krohne-Str. 5 - 47058 Duisburg (Germany)

CONTENTS

1 Safety instructions 5

1.1 Intended use 5
1.2 Certifications 6
1.3 Pressure equipment directive 6
1.4 Safety instructions from the manufacturer 8
1.4.1 Copyright and data protection 8
1.4.2 Disclaimer 8
1.4.3 Product liability and warranty 9
1.4.4 Information concerning the documentation 9
1.4.5 Warnings and symbols used 10
1.5 Safety instructions for the operator 10

2 Device description 11

2.1 Scope of delivery 11
2.2 Device version 12
2.2.1 Indicator versions 12
2.2.2 Float damping 13
2.3 Nameplate 14
2.4 Description code 15

3 Installation 16

3.1 General installation notes 16
3.2 Storage 16
3.3 Installation conditions 17
3.3.1 Tightening torques 19
3.3.2 Magnetic filters 19
3.3.3 Heat insulation 20

4 Electrical connections 21

4.1 Safety instructions 21
4.2 Electrical connection for indicator M40 22
4.2.1 Connection of the limit switches K1/K2 22
4.2.2 Connection of current output 3W2 25
4.2.3 Connection of the Harting plug 28
4.3 Grounding connections 29
4.4 Ingress protection 29

5 Start-up 30

5.1 Standard device 30

CONTENTS

6 Service 31

6.1 Maintenance ... 31
6.2 Replacement and retrofitting ... 31
6.2.1 Replacing floats ... 31
6.2.2 Retrofitting of the float damping ... 32
6.3 Spare parts availability ... 33
6.4 Availability of services ... 33
6.5 Returning the device to the manufacturer ... 33
6.5.1 General information ... 33
6.5.2 Form (for copying) to accompany a returned device ... 34
6.6 Disposal ... 34

7 Technical data 35

7.1 Measuring principle ... 35
7.2 Technical data ... 36
7.3 Dimensions and weight ... 40
7.4 Measuring ranges ... 43

8 Notes 51

1.1 Intended use

CAUTION!
Responsibility for the use of the measuring devices with regard to suitability, intended use and corrosion resistance of the used materials against the measured fluid lies solely with the operator.

INFORMATION!
This device is a Group 1, Class A device as specified within CISPR11:2009. It is intended for use in industrial environment. There may be potential difficulties in ensuring electromagnetic compatibility in other environments, due to conducted as well as radiated disturbances.

INFORMATION!
The manufacturer is not liable for any damage resulting from improper use or use for other than the intended purpose.

The variable area flowmeters are suitable for measuring clean gases, vapours and liquids.

Intended use:

- The product may not contain any ferromagnetic particles or solids. It may be necessary to install magnetic filters or mechanical filters.
- The product must be sufficiently liquid and free of deposits.
- Avoid pressure surges and pulsing flows.
- Open valves slowly. Do not use solenoid valves.

Use suitable measures to eliminate compression vibrations during gas measurements:

- Short pipeline lengths to next restriction
- Nominal pipe size not greater than nominal device size
- Use of floats with damping
- Increase in operating pressure (while taking into account the resulting change in density and thus change in scale)

Observe installation conditions according to VDI/VDE 3513-3.

DANGER!
For devices used in hazardous areas, additional safety notes apply; please refer to the Ex documentation.

CAUTION!
Do not use any abrasive media containing solid particles or highly viscous media.

1.2 Certifications

CE marking

The device fulfils all applicable statutory requirements of the EU directives:

- Pressure equipment directive
- For devices with electrical installations: EMC directive

The manufacturer certifies successful testing of the product by applying the CE mark.
An EU declaration of conformity regarding the directives in question and the associated harmonised standards can be downloaded from our internet site.

1.3 Pressure equipment directive

A conformity assessment in accordance with pressure equipment directive has been carried out for the devices described. Conformity is certified by applying the CE mark. The number of the notified body is also stated.

The PED key describes the rating of the devices:

Example: PED/G1/III/H

G	Gases and vapours
1	Fluid group 1
III	Category III
H	Conformity assessment method according to Module H

The PED key identification can be found on the nameplate of the device (for details refer to *Nameplate* on page 14).

INFORMATION!
The stated pressures (PS) and temperatures (TS) only apply as refers to the pressure resistance of the sensor body. As regards the functionality of the entire device, further restrictions of the maximum temperature may need to be observed. Devices rated below category I due to their size, do not receive the CE mark in the scope of the PED. These devices are subject to applicable sound engineering practice (SEP).

Residual risk

A risk analysis in accordance with the pressure equipment directive has been carried out for the devices. The residual risk is described as follows:

- The devices are designed according to the valid and applicable rules and standards for static operation and their pressure resistance is calculated for the declared maximum pressure and temperature (no calculation for cyclical change).
- Responsibility for the use of the measuring devices with regard to corrosion resistance of the used materials against the measured fluid lies solely with the operator.
- Avoid abrasion.
- Avoid pulsation and cavitation.
- Protect devices from vibration and high-frequency oscillation.
- Draining (backflow) may be delayed due to the float in the measuring tube.
- Implement appropriate measures to counteract external fire hazards

1.4 Safety instructions from the manufacturer

1.4.1 Copyright and data protection

The contents of this document have been created with great care. Nevertheless, we provide no guarantee that the contents are correct, complete or up-to-date.

The contents and works in this document are subject to copyright. Contributions from third parties are identified as such. Reproduction, processing, dissemination and any type of use beyond what is permitted under copyright requires written authorisation from the respective author and/or the manufacturer.

The manufacturer tries always to observe the copyrights of others, and to draw on works created in-house or works in the public domain.

The collection of personal data (such as names, street addresses or e-mail addresses) in the manufacturer's documents is always on a voluntary basis whenever possible. Whenever feasible, it is always possible to make use of the offerings and services without providing any personal data.

We draw your attention to the fact that data transmission over the Internet (e.g. when communicating by e-mail) may involve gaps in security. It is not possible to protect such data completely against access by third parties.

We hereby expressly prohibit the use of the contact data published as part of our duty to publish an imprint for the purpose of sending us any advertising or informational materials that we have not expressly requested.

1.4.2 Disclaimer

The manufacturer will not be liable for any damage of any kind by using its product, including, but not limited to direct, indirect or incidental and consequential damages.

This disclaimer does not apply in case the manufacturer has acted on purpose or with gross negligence. In the event any applicable law does not allow such limitations on implied warranties or the exclusion of limitation of certain damages, you may, if such law applies to you, not be subject to some or all of the above disclaimer, exclusions or limitations.

Any product purchased from the manufacturer is warranted in accordance with the relevant product documentation and our Terms and Conditions of Sale.

The manufacturer reserves the right to alter the content of its documents, including this disclaimer in any way, at any time, for any reason, without prior notification, and will not be liable in any way for possible consequences of such changes.

1.4.3 Product liability and warranty

The operator shall bear responsibility for the suitability of the device for the specific purpose. The manufacturer accepts no liability for the consequences of misuse by the operator. Improper installation or operation of the devices (systems) will cause the warranty to be void. The respective "Standard Terms and Conditions" which form the basis for the sales contract shall also apply.

1.4.4 Information concerning the documentation

To prevent any injury to the user or damage to the device it is essential that you read the information in this document and observe applicable national standards, safety requirements and accident prevention regulations.

If this document is not in your native language and if you have any problems understanding the text, we advise you to contact your local office for assistance. The manufacturer can not accept responsibility for any damage or injury caused by misunderstanding of the information in this document.

This document is provided to help you establish operating conditions, which will permit safe and efficient use of this device. Special considerations and precautions are also described in the document, which appear in the form of icons as shown below.

1.4.5 Warnings and symbols used

Safety warnings are indicated by the following symbols.

DANGER!
This warning refers to the immediate danger when working with electricity.

DANGER!
This warning refers to the immediate danger of burns caused by heat or hot surfaces.

DANGER!
This warning refers to the immediate danger when using this device in a hazardous atmosphere.

DANGER!
These warnings must be observed without fail. Even partial disregard of this warning can lead to serious health problems and even death. There is also the risk of seriously damaging the device or parts of the operator's plant.

WARNING!
Disregarding this safety warning, even if only in part, poses the risk of serious health problems. There is also the risk of damaging the device or parts of the operator's plant.

CAUTION!
Disregarding these instructions can result in damage to the device or to parts of the operator's plant.

INFORMATION!
These instructions contain important information for the handling of the device.

LEGAL NOTICE!
This note contains information on statutory directives and standards.

- HANDLING
  This symbol designates all instructions for actions to be carried out by the operator in the specified sequence.

➲ RESULT
This symbol refers to all important consequences of the previous actions.

1.5 Safety instructions for the operator

WARNING!
In general, devices from the manufacturer may only be installed, commissioned, operated and maintained by properly trained and authorized personnel.
This document is provided to help you establish operating conditions, which will permit safe and efficient use of this device.

2.1 Scope of delivery

INFORMATION!
Inspect the packaging carefully for damages or signs of rough handling. Report damage to the carrier and to the local office of the manufacturer.

INFORMATION!
Do a check of the packing list to make sure that you have all the elements given in the order.

INFORMATION!
Look at the device nameplate to ensure that the device is delivered according to your order. Check for the correct supply voltage printed on the nameplate.

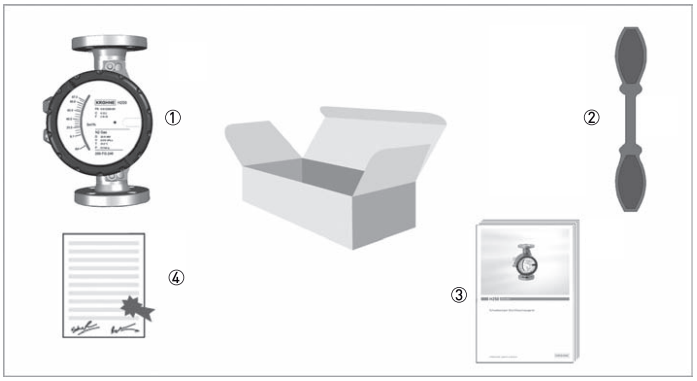

Figure 2-1: Scope of delivery

① Measuring device in ordered version
② Wrench
③ Documentation
④ Certificates, calibration report (supplied to order only)

2.2 Device version

Figure 2-2: Device version - H250 with M40 indicator

Description of the device version

- Local indicator without auxiliary power
- 2 limit switches, type NAMUR
- Electrical signal output 4...20 mA, type KINAX 3W2

2.2.1 Indicator versions

The M40 indicator can be fitted with various modules.

- Version K1/K2
- Version KINAX 3W2

Both versions can be combined with one another.

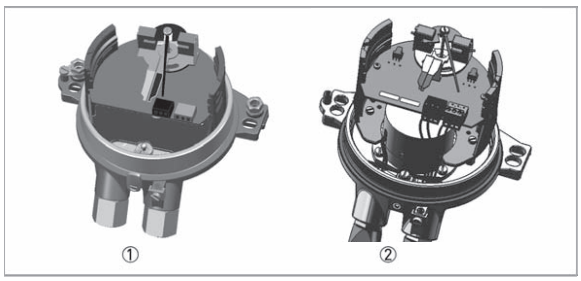

Figure 2-3: Indicator versions

① Indicator with K2 contact module
② Indicator with 3W2 angular position transmitter combined with contact module (special housing M40-L)

2.2.2 Float damping

Float damping is characterised by high standstill times and self-centering. The damping sleeve is made of high performance ceramic or PEEK, depending on the medium and the application. Float damping can also be retrofitted for the user (refer to "Service").

Use of damping

- Generally when CIV and DIV floats are used for gas measurement.
- For TIV floats (H250/RR and H250/HC only) with an operating primary pressure:

Nominal size according to		Operating primary pressure	
EN 1092-1	ASME B16.5	[bar]	[psig]
DN50	1/2"	≤0.3	≤4.4
DN25	1"	≤0.3	≤4.4
DN50	2"	≤0.2	≤2.9
DN80	3"	≤0.2	≤2.9
DN100	4"	≤0.2	≤2.9

2.3 Nameplate

INFORMATION!
Check on the device nameplates, that the device is supplied according to your order.

Figure 2-4: Example of a nameplate

① Device type
② Manufacturer and manufacturer address
③ Notified body
④ Rating data: temperature & pressure rating
⑤ PED data
⑥ Electrical connection data
⑦ Note to observe the documentation and for disposal

Additional markings on the indicator

- SN - serial number
- SO - sales order / item
- PA - production order
- Vx - product configurator code
- AC - article code

2.4 Description code

The description code consists of the following elements *:

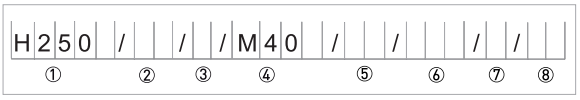

Figure 2-5: Description code

① **Device type**
H250 - standard version
H250H - horizontal flow direction
H250U - flow direction from top to bottom
② **Materials / versions**
RR - stainless steel
C - PTFE or PTFE/ceramics
HC - Hastelloy®
Ti - Titanium
Mo - Monel
In - Inconel
F - aseptic version (food)
③ **Heating jacket version**
B - with heating jacket
④ **Type series of indicators**
M40 - Indicator M40
M40S - indicator with increased corrosion protection
M40R - indicator in stainless steel housing
M40-L - indicator with extended version
⑤ **High-temperature version**
HT - version with HT extension
⑥ **Electrical signal output**
ES - electrical signal output 4...20 mA KINAX 3W2
⑦ **Shielding**
W - Tungsten
⑧ **Limit switches**
K1 - one limit switch
K2 - two limit switches

* positions which are not needed are omitted (no blank positions)

3 INSTALLATION

3.1 General installation notes

INFORMATION!
Inspect the packaging carefully for damages or signs of rough handling. Report damage to the carrier and to the local office of the manufacturer.

INFORMATION!
Do a check of the packing list to make sure that you have all the elements given in the order.

INFORMATION!
Look at the device nameplate to ensure that the device is delivered according to your order. Check for the correct supply voltage printed on the nameplate.

3.2 Storage

- Store the device in a dry, dust-free location.
- Avoid direct exposure to the sun.
- Store the measuring device in the original packaging.
- The permissible storage temperatures for standard devices are: -40...+80°C / -40...+176°F

3.3 Installation conditions

CAUTION!
When installing the device in the piping, the following points must be observed:

- *The variable area flowmeter must be installed vertically (measuring principle). Flow direction from bottom to top. For installation recommendations please refer also to directive VDI/VDE 3513, sheet 3.*
  H250Hs are installed horizontally and H250U devices are installed vertically with the flow direction from top to bottom.
- *A straight unimpeded inlet run of ≥ 5 DN upstream of the device and a straight outlet run of ≥ 3 DN downstream of the device are recommended.*
- *Screws, bolts and gaskets are to be provided by the customer and must be selected in accordance with the pressure rating of the connection or the operating pressure.*
- *The inner diameter of the flange deviates from the standard dimensions. Flange seal standard DIN 2690 or ASME B16.21 can be applied.*
- *Align the gaskets. Tighten the nuts with the tightening torques of the appropriate pressure rating.*
  For devices with PTFE liner or ceramic liner and PTFE raised faces, refer to chapter "Tightening torques".
- *Control devices are to be positioned downstream of the measuring device.*
- *Shutoff devices are preferably to be positioned upstream of the measuring device.*
- *Before connecting, blow or flush out the pipes leading to the device.*
- *Piping for gas flow need to be dried before the device is installed.*
- *Use connectors suitable for the particular device version.*
- *Align the piping centrically with the connection bores on the measuring device so they are free of stresses.*
- *If necessary, the piping has to be supported to reduce the vibrations transmitted to the measuring device.*
- *Do not lay signal cables directly next to cables for the power supply.*

Minimum distance between devices

When several devices are installed next to each other, a minimum distance of > 300 mm / 11.8" between the devices is necessary.

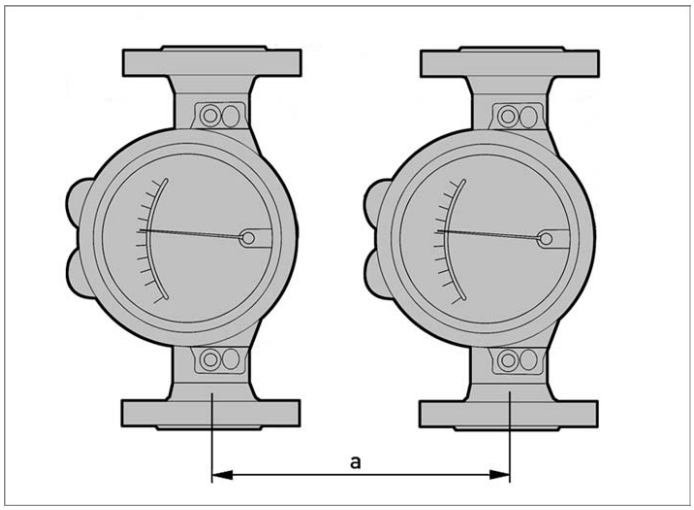

Figure 3-1: Minimum distance between devices

Take special note of the installation position for the H250H with horizontal flow direction:

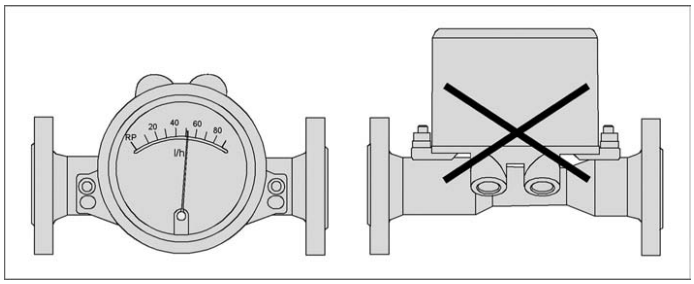

Figure 3-2: Installation position for H250H

In order to comply with thermal parameters and measuring accuracy, H250H flowmeters for horizontal installation are to be installed in the pipeline so that the display is located on the side of the measuring tube. The maximum product and ambient temperatures indicated as well as the measuring accuracy are based on lateral installation of the indicator.

3.3.1 Tightening torques

For devices with PTFE liner or ceramic liner and PTFE raised face, tighten the flange threads with the following torques:

Nominal size according to				Stud bolts			Max. torque			
EN 1092-1		ASME B16.5		EN	ASME		EN 1092-1		ASME 150 lb	
DN	PN	Inch	lb		150 lb	300 lb	Nm	ft*lbf	Nm	ft*lbf
15	40	1/2"	150/300	4x M12	4x 1/2"	4x 1/2"	9.8	7.1	5.2	3.8
25	40	1"	150/300	4x M12	4x 1/2"	4x 5/8"	21	15	10	7.2
50	40	2"	150/300	4x M16	4x 5/8"	8x 5/8"	57	41	41	30
80	16	3"	150/300	8x M16	4x 5/8"	8x 3/4"	47	34	70	51
100	16	4"	150/300	8x M16	8x 5/8"	8x 3/4"	67	48	50	36

Table 3-1: Tightening torques

3.3.2 Magnetic filters

The use of magnetic filters is recommended when the medium contains particles which can be influenced magnetically. The magnetic filter is to be installed in the flow direction upstream of the flowmeter. Bar magnets are positioned helically in the filter to provide optimal efficiency at low pressure loss. All of the magnets are coated individually with PTFE to protect against corrosion. Material: 1.4404 / 316L

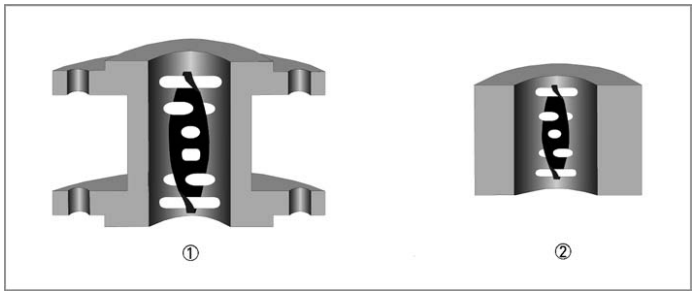

Figure 3-3: Types of magnetic filters

① Type F - fitting part with flange - overall length 100 mm / 4"
② Type FS - fitting part without flange - overall length 50 mm / 2"

3.3.3 Heat insulation

CAUTION!
The indicator housing may not be heat-insulated.
The heat insulation ③ may only reach as far as the housing fastening ④.

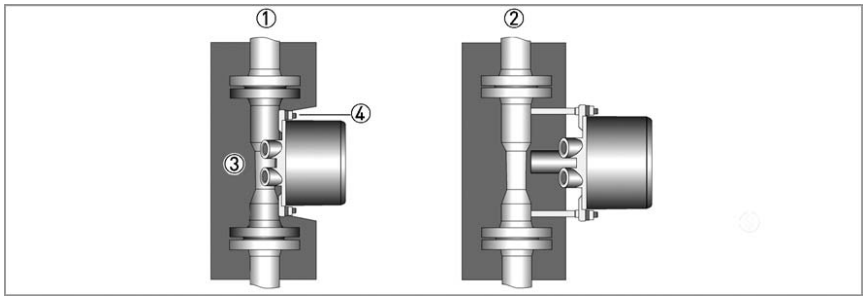

Figure 3-4: Heat insulation

① Standard indicator M40
② Indicator with HT extension

CAUTION!
The heat insulation ① may only reach to the rear of the housing ②. The area around the cable entries ③ must be freely accessible.

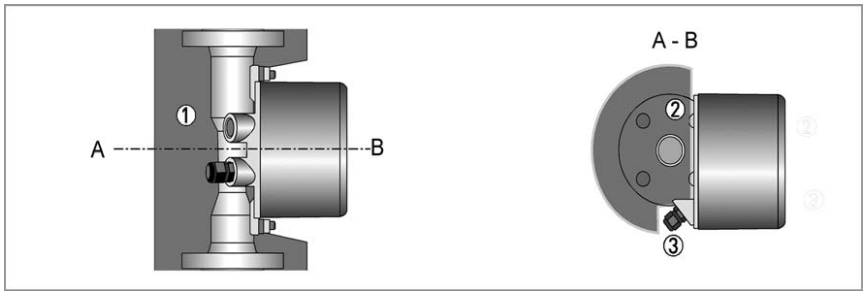

Figure 3-5: Heat insulation - cross-section

4.1 Safety instructions

DANGER!
All work on the electrical connections may only be carried out with the power disconnected. Take note of the voltage data on the nameplate!

DANGER!
Observe the national regulations for electrical installations!

DANGER!
For devices used in hazardous areas, additional safety notes apply; please refer to the Ex documentation.

WARNING!
Observe without fail the local occupational health and safety regulations. Any work done on the electrical components of the measuring device may only be carried out by properly trained specialists.

INFORMATION!
Look at the device nameplate to ensure that the device is delivered according to your order. Check for the correct supply voltage printed on the nameplate.

4.2 Electrical connection for indicator M40

4.2.1 Connection of the limit switches K1/K2

The M40 indicator can be fitted with a maximum of two limit switches.
The limit switch operates as a proximity switch which is activated inductively by the semicircular metal vane of the pointer. The switching points are set using the contact pointers.
The position of the contact pointers is indicated on the scale.

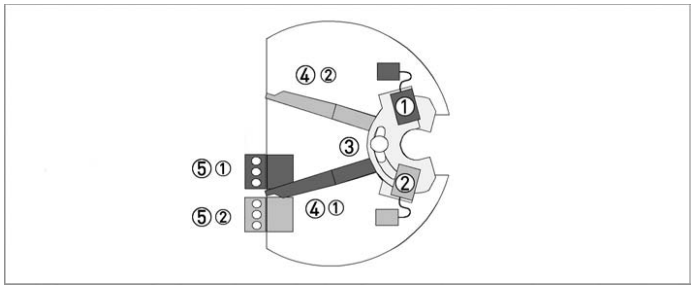

Figure 4-1: Design of limit switch module

① MIN contact
② MAX contact
③ Locking screw
④ Peak value
⑤ Connection terminal

The connection terminals have a pluggable design and can be removed to connect the cables.
The built-in limit switch types are shown on the nameplate of the indicator.

Contact	MIN			MAX		
Terminal number	1	2	3	4	5	6
Connection 2-wire NAMUR	-	+		-	+	
Connection 3-wire	+	⎍	-	+	⎍	-
Connection Reed SPST	+		-	+		-

Table 4-1: Electrical connection of the limit switches

Connection diagram for the limit switches

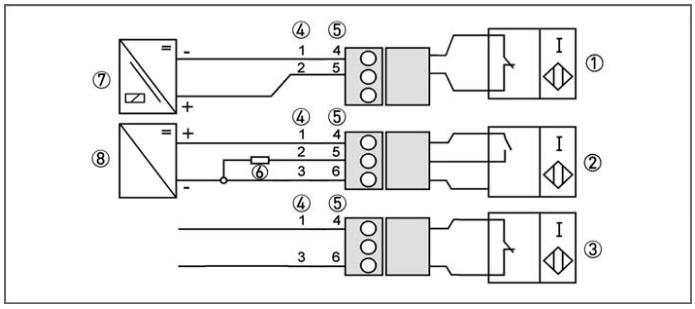

Figure 4-2: Connection terminals for limit switches

① Limit switch 2-wire NAMUR
② Limit switch 3-wire
③ Limit switch Reed SPST
④ Terminal connection of Min. contact
⑤ Terminal connection of Max. contact
⑥ 3-wire load
⑦ NAMUR isolated switching amplifier
⑧ 3-wire power supply

Limit setting

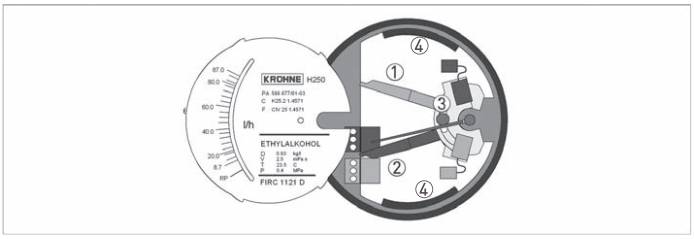

Figure 4-3: Limit setting

① Contact pointer MAX
② Contact pointer MIN
③ Locking screw (max. tightening torque is 0.2 Nm)
④ Scale support

Setting is carried out directly via contact pointers ① and ②:

- Pull the upper scale support 2 mm / 0.08" flexibly upwards and pull out the scale from its locking point to the side.
- Loosen the locking screw ③ slightly.
- Slide in the scale up to the locking point.
- Set contact pointers ① and ② to the desired switching point.

4 ELECTRICAL CONNECTIONS

After the setting:

- Pull the upper scale support 2 mm / 0.08" flexibly upwards and pull out the scale again from its locking point to the side.
- Tighten the locking screw ③ with max. 0.2 Nm.
- Slide in the scale up to the locking point.

CAUTION!
If the maximum torque (0.2 Nm) is exceeded, the locking screw can be torn off during tightening!

Definition of switch contact

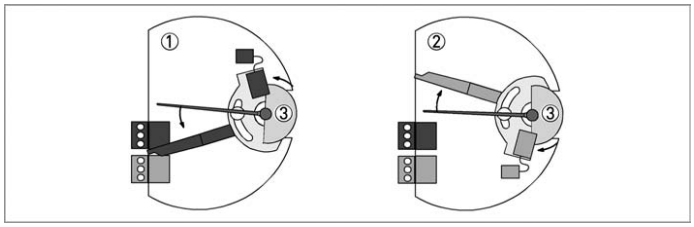

Figure 4-4: Definition of switch contact

① MIN contact
② MAX contact
③ Pointer vane with switching vane

If the pointer vane goes into the slot, an alarm is triggered.
If the pointer vane is outside of the proximity switch, a wire break in a NAMUR contact also triggers the alarm.

The 3-wire limit switch does not have any wire break detection.

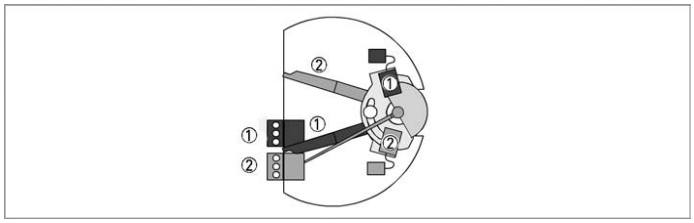

Figure 4-5: Definition MIN-MIN - MAX-MAX

① MIN 2 contact or MAX 1 contact
② MIN 1 contact or MAX 2 contact

Contact	Type	Current consumption
MIN 1	NAMUR	≤ 1 mA
MIN 2	NAMUR	≤ 1 mA
MAX 1	NAMUR	≥ 3 mA
MAX 2	NAMUR	≥ 3 mA

Table 4-2: Current consumption in the position shown:

4.2.2 Connection of current output 3W2

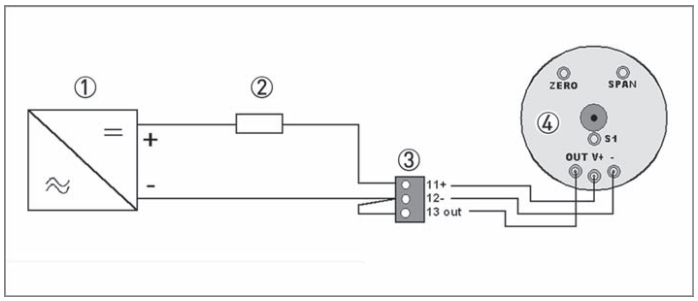

Figure 4-6: Current output terminal connection

① Power supply 12...30 VDC
② External load
③ Terminal connection
④ 3W2 angular position transmitter

INFORMATION!
In the case of a KINAX with tungsten coating, the terminal strip is omitted ③.
Instead, either a customer-specific plug is mounted on the device or a pre-assembled cable is routed to the outside. The corresponding cable configuration is described on a sticker at the outside of the cable.

Power supply 3W2 with galvanic isolation

Wiring must be planned with great care when it comes to connecting other devices such as evaluation units or process control. Internal connections in these devices (e.g. GND with PE, mass loops) may lead to non-permitted voltage potentials which could negatively affect the function of the converter itself or that of a device connected to it. In such cases a protected extra-low voltage (PELV) is recommended.

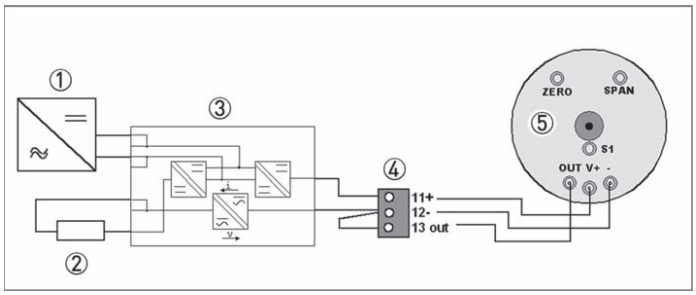

Figure 4-7: Current output terminal connection with galvanic isolation

① Power supply (refer to supply isolator information)
② External load
③ Converter supply isolator with galvanic isolation
④ Terminal connection
⑤ 3W2 angular position transmitter

INFORMATION!
In the case of a KINAX with tungsten coating, the terminal strip is omitted ④.
Instead, either a customer-specific plug is mounted on the device or a pre-assembled cable is routed to the outside. The corresponding cable configuration is described on a sticker at the outside of the cable.

Power supply

INFORMATION!
The supply voltage has to be between 12 VDC and 30 VDC. This is based on the total resistance of the measuring loop. To calculate this, the resistance of each component in the measuring loop (not including the device) must be added up.

The required supply voltage can be calculated using the following formula:

$U_{ext.} = R_L * 22\ mA + 12\ V$

where
$U_{ext.}$ = minimum supply voltage
R_L = total measuring loop resistance

INFORMATION!
The power supply has to be able to supply a minimum of 22 mA.

Current output adjustment

- A fine adjustment of the current output can be performed using the ZERO and SPAN adjustment screws of the KINAX 3W2 angular position transmitter.
- For adjustment of 4.00 mA, the pointer must be set to RP on the scale.
  4.00 mA can be set using ZERO.
- For adjustment of 20.00 mA, the pointer must be set to 100% flow rate value of the scale.
  20.00 mA can be set using SPAN.
- Instead of manual adjustment of the pointer, the flow rate values ??0 and 100% can be set for the adjustment.

4.2.3 Connection of the Harting plug

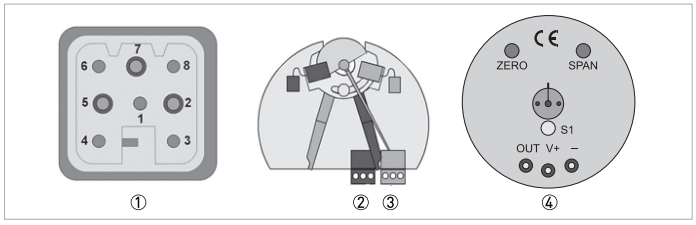

Figure 4-8: Terminal assignment

① Terminal assignment of HAN® 7D - View of plug connection

① Pin number HAN® 7D	K1/K2 NAMUR contacts	ES	Terminal number
1	② NAMUR MIN (-)	-	1
2	② NAMUR MIN (+)	-	2
3	③ NAMUR MAX (-)	-	4
4	③ NAMUR MAX (+)	-	5
5	-	④ 4...20 mA (+)	11
6	-	④ 4...20 mA (-)	12
7	-	④ 0...20 mA	13
8	-	-	-

Table 4-3: Terminal assignment - Harting plug to terminal number

INFORMATION!
In the case of a KINAX with tungsten coating ④, for the electrical connection the terminal strip is omitted.
Instead, either a customer-specific plug is mounted on the device or a pre-assembled cable is routed to the outside. The corresponding cable configuration is described on a sticker at the outside of the cable.

4.3 Grounding connections

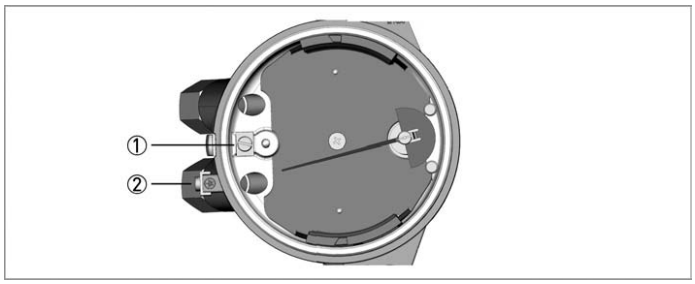

Figure 4-9: Grounding connections

① Grounding connection on the indicator
② Outer grounding connection

DANGER!
The grounding wire may not transfer any interference voltage.
Do not use this grounding cable to ground any other electrical devices.

4.4 Ingress protection

The measuring device meets all requirements of ingress protection IP66/68.

DANGER!
After all servicing and maintenance work on the measuring device, the specified protection class must be ensured again.

Therefore it is essential to observe the following points.

- Use only original gaskets. They must be clean and free of any damage. Defective gaskets must be replaced.
- The electrical cables must be undamaged and must comply with regulations.
- The cables must be laid with a loop ③ upstream of the measuring device to prevent water from getting into the housing.
- The cable feedthroughs ② must be tightened.
- Close the unused cable feedthroughs using blanking plugs ①.

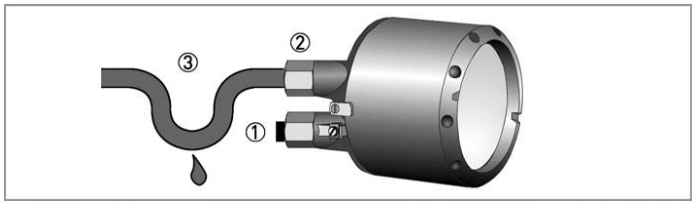

Figure 4-10: Laying the cable

① Use blanking plugs if no cable is routed through
② Tighten cable feedthrough firmly
③ Lay the cable in a loop

5 START-UP

5.1 Standard device

CAUTION!
When starting up the device, the following points must be observed:

- *Compare the actual operating pressure and the product temperature of the system with the specifications on the nameplate (PS and TS). These specifications may not be exceeded.*
- *Make sure materials are compatible.*
- *Slowly open the shut-off valve.*
- *When measuring liquids ensure that the pipelines are carefully evacuated.*
- *When measuring gases, increase pressure slowly.*
- *Avoid float impact (e.g. caused by solenoid valves), as this is likely to damage the measuring unit or float.*

A minimum operating pressure (primary pressure) is necessary to operate the device:

Medium	Pressure loss : operating pressure
Liquids	1 : 2
Gases without float damping	1 : 5
Gases with float damping	1 : 2

6.1 Maintenance

Within the scope of routine maintenance of the system and pipelines, the flowmeter should also be inspected for signs of fouling, corrosion, mechanical wear and leaks, as well as damage to the measuring tube and the indicator.
We advise that inspections are carried out at least once per year.
The device must be removed from the pipeline before cleaning.

CAUTION!
Pressurised pipes have to be depressurised before removing the device.
Empty the pipelines as completely as possible.
In the case of devices used for measuring aggressive or hazardous media, appropriate safety precautions must be taken with regard to residual liquids in the measuring unit.
New gaskets have to be used when re-installing the device in the pipeline.
Avoid electrostatic charges when cleaning the surfaces (e.g. sight window)!

6.2 Replacement and retrofitting

Some components of the variable area flowmeter can be exchanged or retrofitted:

- Float
- Float damping

6.2.1 Replacing floats

- Remove the device from the pipeline.
- Take the upper span ring out of the measuring unit.
- Take the upper float stop and float out of the measuring unit.
- Insert the new float into the centre hole of the lower float stop and push into the measuring unit along with the upper float stop. While doing this, the float's upper guide rod must be guided through the middle hole of the float stop.
- Insert the span ring into the measuring unit.
- Fit the device back into the pipeline.

CAUTION!
Without a recalibration an additional measuring error is to be expected.

6.2.2 Retrofitting of the float damping

- Take the upper span ring ① out of the measuring unit.
- Take the upper float stop ② and float ⑤ out of the measuring unit.
- Fasten the retaining ring ③ into the lower slot of the float's guide rod.
- Slide ceramic sleeve ④ on to the float's guide rod and attach it to the top slot using the retaining ring ③.
- Insert float into the lower float guide in the measuring unit.
- Retrofit the supplied damping cylinder with the integrated float stop ② into the measuring unit.
- Insert upper span ring ①.

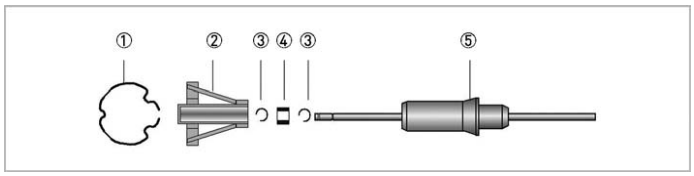

Figure 6-1: Design of the float damping

① Span ring
② Float stop
③ Retaining ring
④ Ceramic sleeve
⑤ Float

6.3 Spare parts availability

The manufacturer adheres to the basic principle that functionally adequate spare parts for each device or each important accessory part will be kept available for a period of 3 years after delivery of the last production run for the device.

This regulation only applies to spare parts which are subject to wear and tear under normal operating conditions.

6.4 Availability of services

The manufacturer offers a range of services to support the customer after expiration of the warranty. These include repair, maintenance, technical support and training.

INFORMATION!
For more precise information, please contact your local sales office.

6.5 Returning the device to the manufacturer

6.5.1 General information

This device has been carefully manufactured and tested. If installed and operated in accordance with these operating instructions, it will rarely present any problems.

WARNING!
Should you nevertheless need to return a device for inspection or repair, please pay strict attention to the following points:

- *Due to statutory regulations on environmental protection and safeguarding the health and safety of the personnel, the manufacturer may only handle, test and repair returned devices that have been in contact with products without risk to personnel and environment.*
- *This means that the manufacturer can only service this device if it is accompanied by the following certificate (see next section) confirming that the device is safe to handle.*

WARNING!
If the device has been operated with toxic, caustic, radioactive, flammable or water-endangering products, you are kindly requested:

- *to check and ensure, if necessary by rinsing or neutralising, that all cavities are free from such dangerous substances,*
- *to enclose a certificate with the device confirming that it is safe to handle and stating the product used.*

6.5.2 Form (for copying) to accompany a returned device

CAUTION!
To avoid any risk for our service personnel, this form has to be accessible from outside of the packaging with the returned device.

Company:		Address:
Department:		Name:
Tel. no.:		Fax no. and/or Email address:
Manufacturer's order no. or serial no.:		
The device has been operated with the following medium:		
This medium is:		radioactive
		water-hazardous
		toxic
		caustic
		flammable
		We checked that all cavities in the device are free from such substances.
		We have flushed out and neutralized all cavities in the device.
We hereby confirm that there is no risk to persons or the environment through any residual media contained in the device when it is returned.		
Date:		Signature:
Stamp:		

6.6 Disposal

LEGAL NOTICE!
Disposal must be carried out in accordance with legislation applicable in your country.

Separate collection of WEEE (Waste Electrical and Electronic Equipment) in the European Union:

According to the directive 2012/19/EU, the monitoring and control instruments marked with the WEEE symbol and reaching their end-of-life **must not be disposed of with other waste**.
The user must dispose of the WEEE to a designated collection point for the recycling of WEEE or send them back to our local organisation or authorised representative.

7.1 Measuring principle

The H250 flowmeter operates in accordance with the float measuring principle. The measuring unit consists of a metal cone in which a float can move freely up and down. The flow goes from bottom to top. The float adjusts itself so that the buoyancy force A acting on it, the form resistance W and its weight G are in equilibrium: G = A + W.

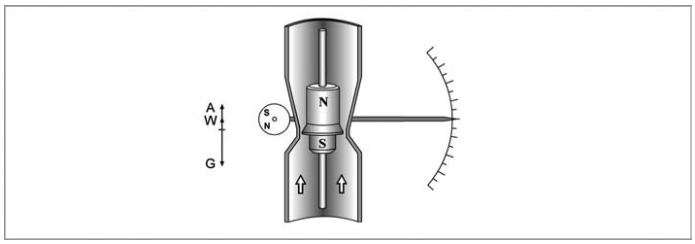

Figure 7-1: Measuring principle - general

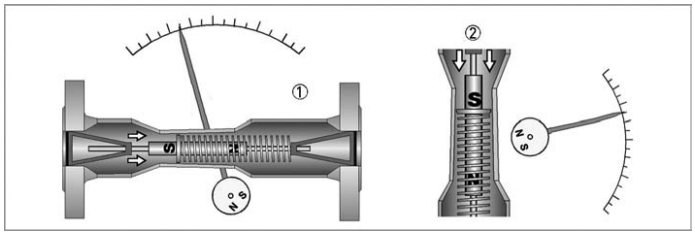

Figure 7-2: Measuring principle for H250H and H250U

① H250H - horizontal flow direction
② H250U - flow direction from top to bottom

The flowmeter operates in accordance with a modified float measuring principle.
The guided float adjusts itself so that the flow force acting on it is in equilibrium with the opposing spring force. The flow-dependent position of the float in the measuring unit is displayed on a scale by means of a magnetic coupling.

7.2 Technical data

INFORMATION!

- *The following data is provided for general applications. If you require data that is more relevant to your specific application, please contact us or your local sales office.*
- *Additional information (certificates, special tools, software,...) and complete product documentation can be downloaded free of charge from the website (Downloadcenter).*

Measuring system

Application range	Flow measurement of liquids, gases and vapours
Function / Measuring principle	Float measuring principle
Measured value	
Primary measured value	Float position
Secondary measured value	Operating volume flow, standard volume flow or mass flow

Measuring accuracy

Directive	VDI/VDE 3513, sheet 2 (q_G = 50%)
H250 /RR /HC /F	2.5%
H250/C (Ceramic, PTFE) H250H, H250U, H250 (100 : 1)	4%
Precision (repeatability)	
H250 /RR /HC /F	0.5%
H250H, H250U, H250 (100 : 1)	1%

Operating conditions

Temperature	
Max. operating temperature TS	-196...+300°C / -321...+572°F Depending on the version (refer to nameplate)
Pressure	
Max. operating pressure PS	Depending on the version (refer to nameplate)
Max. test pressure PT	Depending on the version (refer to nameplate)
Min. required operating pressure	2 times greater than pressure loss (refer to measuring ranges)
Ingress protection	
M40, M40R	IP66/68 according to EN 60529, NEMA 4/4X/6 according to NEMA 250
M40R	IP69K according to DIN 40050-9
Float damping during gas measurement recommended	
DN15...25 / 1/2...1"	Operating pressure <0.3 barg / 4.4 psig
DN50...100 / 2...4"	Operating pressure <0.2 barg / 2.9 psig

Installation conditions according to VDI/VDE 3513, sheet 3

Inlet section	≥ 5 x DN
Outlet section	≥ 3 x DN

Materials

Device	Flange	Measuring tube	Float	Float guide	Ring orifice
H250/RR	CrNi steel 1.4401 / 1.4404, 316 / 316L (dual certification)		1.4404, 316L		
H250/HC	Hastelloy® C4 (2.4610) solid or plated	Hastelloy® C4			
H250/F - Food	CrNi steel 1.4435		CrNi-steel 1.4435 / 1.4404		
H250/C - Ceramic/PTFE ①	CrNi steel 1.4571 with TFM/PTFE ②		PTFE or Al_2O_3 with FFKM gasket	Al_2O_3 and PTFE	Al_2O_3

① DN100/4" only PTFE
② TFM/PTFE liner (electrically non-conductive), conductive PTFE on request

Other options on request:

- Special materials: e.g. SMO 254/6Mo/1.4547, Titanium Grade 2, Hastelloy® C276/2.4819, Monel®/2.4360, Inconel®/2.4856 a.o.
- Float damping: PEEK (only for gas) or ceramic
- Standard gasket for devices with female thread as insert: O-ring FPM / FKM, others optional e.g. FFKM, EPDM

M40	Aluminium, two-layer powder coating (epoxy / polyester)
M40R	Stainless steel without coating 1.4408 / CF8M
Offshore	Wet coating on request

Temperatures

For devices to be used in hazardous areas, special temperature ranges apply. These can be found in the Ex supplementary instructions.

Temperatures H250/M40 - mechanical indicator without auxiliary power

	Material		Product temperature		Ambient temperature	
	Float	Liner	[°C]	[°F]	[°C]	[°F]
H250/RR	Stainless steel		-196...+300	-321...+572	-40...+120	-40...+248
H250/RR screw fitting FPM/FKM			-20...+200	-4...+392	-20...+120	-4...+248
H250/HC	Hastelloy®		-196...+300	-321...+572	-40...+120	-40...+248
H250/C	PTFE		-196...+70	-321...+158	-40...+70	-40...+158
H250/C	Ceramic	PTFE	-196...+150	-321...+302	-40...+70	-40...+158
H250/C	Ceramic	TFM / Ceramic	-196...+250	-321...+482	-40...+120	-40...+248
H250 H/U	Spring material stainless steel 1.4301		-40...+100	-40...+212	-40...+120	-40...+248
	Spring material Hastelloy® 2.4610		-40...+200	-40...+392	-40...+120	-40...+248

7 TECHNICAL DATA

Ambient temperatures T_{amb} with electrical components

Version	[°C]	[°F]
KINAX 3W2 angular position transmitter	-25...+70	-13...+158
Limit switches SJ3,5-SN / I7S23,5-N	-40...+70	-40...+158
Limit switches SC3,5-N0 / SJ3,5-S1N / SB3,5-E2	-25...+70	-13...+158

INFORMATION!
The device must not be heated by radiated heat (e.g. exposure to the sun) to an electronics housing surface temperature above the maximum permissible ambient temperature. A sunshade is available as option.

Maximum product temperatures H250/M40 - with electrical components [°C]

			T_{amb} < +40°C		T_{amb} < +60°C ①	
EN	ASME	Version with	Standard	HT	Standard	HT
DN15, DN25	1/2", 1"	KINAX	+200	+300	+180	+300
		Limit switch NAMUR	+200	+300	+200	+300
		Limit switch 3-wire	+200	+300	+130	+295
DN50	2"	KINAX	+200	+300	+165	+300
		Limit switch NAMUR	+200	+300	+200	+300
		Limit switch 3-wire	+200	+300	+120	+195
DN80, DN100	3", 4"	KINAX	+200	+300	+150	+250
		Limit switch NAMUR	+200	+300	+200	+300
		Limit switch 3-wire	+190	+300	+110	+160

Maximum product temperatures H250/M40 - with electrical components [°F]

			T_{amb} < +104°F		T_{amb} < +140°F ①	
EN	ASME	Version with	Standard	HT	Standard	HT
DN15, DN25	1/2", 1"	KINAX	392	572	356	572
		Limit switch NAMUR	392	572	392	572
		Limit switch 3-wire	392	572	266	563
DN50	2"	KINAX	392	572	165	572
		Limit switch NAMUR	392	572	392	572
		Limit switch 3-wire	392	572	248	383
DN80, DN100	3", 4"	KINAX	392	572	302	482
		Limit switch NAMUR	392	572	392	572
		Limit switch 3-wire	374	572	230	320

① If there are no heat insulation measures, a heat-resistant cable is necessary (continuous operating temperature of the cable to be used: +100°C / +212°F)

Short name

HT	High-temperature version
KINAX	Current output 4...20 mA, KINAX 3W2

Cable glands

	Material	Cable diameter	
		[mm]	[Inch]
M20x1.5 Standard	PA	8...13	0.315...0.512
M20x1.5	Nickel-plated brass	10...14	0.394...0.552
M20x1.5	Stainless steel	10...14	0.394...0.552

Limit switches K1/K2

Terminal connection	2.5 mm^2			
Limit switches	I7S23,5-N SC3,5-N0	SJ3,5-SN ①	SJ3,5-S1N ①	SB3,5-E2
NAMUR (IEC 60947-5-6)	Yes	Yes	Yes	No
Connection type	2-wire	2-wire	2-wire	3-wire
Switching element function	N/C contact	N/C contact	N/O contact	PNP N/O contact
Nominal voltage U_0	8.2 VDC	8.2 VDC	8.2 VDC	10...30 VDC
Pointer vane not detected	≥ 3 mA	≥ 3 mA	≤ 1 mA	≤ 0.3 VDC
Pointer vane detected	≤ 1 mA	≤ 1 mA	≥ 3 mA	U_B - 3 VDC
Continuous current	-	-	-	Max. 100 mA
No load current I_0	-	-	-	≤ 15 mA
Switching cycles	-	-	-	-

① safety oriented

3W2 angular position transmitter

Type	708 - 211D 1/C
Power supply	12...30 VDC
Rotation angle	10°
Signal output	4...20 mA

7.3 Dimensions and weight

Dimensions H250/M40

Front view | Side view | with heating | High-temperature

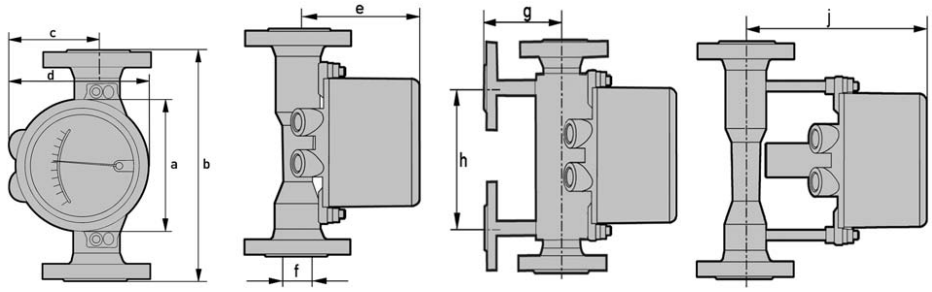

	a		b		d		h	
	[mm]	["]	[mm]	["]	[mm]	["]	[mm]	["]
H250/RR flange, H250/F Clamp connection	141	5.56	250	9.85	150	5.91	150	5.91
H250/RR from 2" 600 lb, ISO 228, ASME B1.20.1, SMS			300	11.82				

EN	ASME	c ①		e ②		Ø f		g		j	
		[mm]	["]	[mm]	["]	[mm]	["]	[mm]	["]	[mm]	["]
DN15	½"	94	3.70	114	4.49	20	0.80	97	3.82	197	7.76
DN25	1"	94	3.70	127	5.00	32	1.28	109	4.27	209	8.23
DN50	2"	107	4.22	141	5.55	65	2.57	125	4.90	222	8.74
DN80	3"	107	4.22	157	6.18	89	3.51	143	5.61	238	9.37
DN100	4"	107	4.22	167	6.57	114	4.50	150	5.91	248	9.76

① without cable gland; ② M40-L + 25 mm / 1"

ISO 228 / ASME B1.20.1 Female thread screwed | ISO 228 / ASME B1.20.1 Female thread welded | H250/F ① Clamp connection | H250/F screw connection DIN 11851

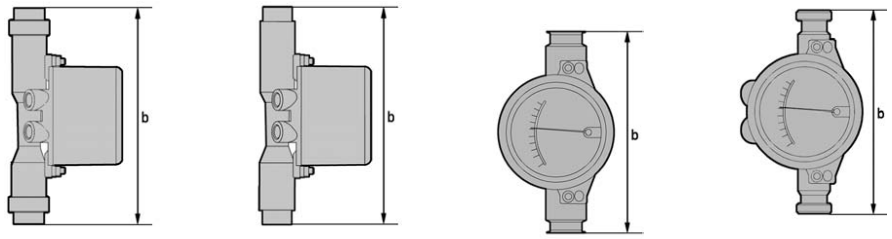

① Stainless steel 1.4435 - wetted surfaces Ra ≤ 0.8 / 0.6 µm

Weight

		H250		Heating			
Nominal size		EN 1092-1		with flange connection		with Ermeto connection	
EN	ASME	[kg]	[lb]	[kg]	[lb]	[kg]	[lb]
DN15	1/2"	3.5	7.7	5.6	12.6	3.9	8.6
DN25	1"	5	11	7.5	16.5	5.8	12.8
DN50	2"	8.2	18.1	11.2	24.7	9.5	21
DN80	3"	12.2	26.9	14.8	32.6	13.1	28.9
DN100	4"	14	30.9	17.4	38.4	15.7	34.6

		H250/C [Ceramic / PTFE]						Screw connection	
Nominal size		EN 1092-1		ASME 150 lb		ASME 300 lb		DIN 11864-1	
EN	ASME	[kg]	[lb]	[kg]	[lb]	[kg]	[lb]	[kg]	[lb]
DN15	1/2"	3.5	7.7	3.2	7.1	3.5	7.7	2	4.4
DN25	1"	5	11	5.2	11.5	6.8	15	3.5	7.7
DN50	2"	10	22.1	10	22.1	11	24.3	5	11
DN80	3"	13	28.7	13	28.7	15	33.1	7.6	16.8
DN100	4"	15	33.1	16	35.3	17	37.5	10.3	22.7

Process connections

	Standard	Conn. dim.	Pressure rating
Flanges (H250/RR /HC /C)	EN 1092-1	DN15...150	PN16...250
	ASME B16.5	1/2...6"	150...2500 lb
	JIS B2220	15...100	10...20K
Clamp connections (H250/RR /F)	DIN 32676	DN15...100	10...16 bar
	ISO 2852	Size 25...139.7	10...16 bar
Screw connections (H250/RR /HC /F)	DIN 11851	DN15...100	25...40 bar
	SMS 1146	1...4"	6 barg / 88.2 psig
Female thread welded (H250/RR /HC)	ISO 228	G1/2...G2"	≥ 50 barg / 735 psig
	ASME B1.20.1	1/2...2" NPT	
Female thread (H250/RR /HC) with insert, FPM gasket and union nut	ISO 228	G1/2...2	≤ 50 barg / 735 psig
	ASME B1.20.1	1/2...2" NPT	
Thread connection aseptic (H250/F)	DIN 11864-1	DN15...50	PN40
		DN80...100	PN16
Flange aseptic (H250/F)	DIN 11864-2	DN15...50	PN40
		DN80...DN100	PN16
Measuring device (H250/RR /HC) with heating:			
Heating with flange connection	EN 1092-1	DN15	PN40
	ASME B16.5	1/2"	150 lb / RF
Heating pipe connection for Ermeto	-	E12	PN40

Higher pressure ratings and other connections on request

7 TECHNICAL DATA

Bolts and tightening torques

For measuring devices with PTFE liner or ceramic liner and PTFE raised face, tighten the flange threads with the following torques:

Nominal sizes EN

	Stud bolts	Tightening torques	
Nominal size according to EN 1092-1	Quantity x size	[Nm]	[lb-ft]
DN15 PN40 ①	4x M12	9.8	7.1
DN25 PN40 ①	4x M12	21	15
DN50 PN40 ①	4x M16	57	41
DN80 PN16 ①	8x M16	47	34
DN100 PN16 ①	8x M16	67	48

① Standard connections; other connections on request

Nominal size ASME

	Stud bolts		Tightening torques	
Nominal size acc. to ASME B16.5	Quantity x size		[Nm]	[lb-ft]
	150 lb	300 lb		
1/2" 150 lb / 300 lb ①	4x 1/2"	4x 1/2"	5.2	3.8
1" 150 lb / 300 lb ①	4x 1/2"	4x 5/8"	10	7.2
2" 150 lb / 300 lb ①	4x 5/8"	8x 5/8"	41	30
3" 150 lb / 300 lb ①	4x 5/8"	8x 3/4"	70	51
4" 150 lb / 300 lb ①	8x 5/8"	8x 3/4"	50	36

① Standard connections; other connections on request

Pressure tightness (vacuum) H250/C

Max. process temperature ▸			+70°C / +158°F		+150°C / +302°F		+250°C / +482°F	
			Min. operating pressure					
Nominal size	Float	Liner	[mbara]	[psia]	[mbara]	[psia]	[mbara]	[psia]
DN15...100	PTFE	PTFE	100	1.45	-	-	-	-
DN15...80	Ceramic	PTFE	100	1.45	250	3.63	-	-
DN15...80	Ceramic	TFM / Ceramic	100	1.45	100	1.45	100	1.45

7.4 Measuring ranges

H250/RR - stainless steel, H250/HC - Hastelloy®

Measuring span:	10 : 1		
Flow values:	Values = 100%	Water: +20°C / +68°F	Air: +20°C / +68°F, 1.013 bara / 14.7 psia

		Water			Air			Max. pressure loss			
Float ▸		TIV	CIV	DIV	TIV Alu.	TIV	DIV	TIV Alu.	TIV	CIV	DIV
Nominal size	Cone	[l/h]			[Nm³/h]			[mbar]			
DN15, 1/2"	K 15.1	18	25	-	0.42	0.65	-	12	21	26	-
	K 15.2	30	40	-	0.7	1	-	12	21	26	-
	K 15.3	55	63	-	1	1.5	-	12	21	26	-
	K 15.4	80	100	-	1.7	2.2	-	12	21	26	-
	K 15.5	120	160	-	2.5	3.6	-	12	21	26	-
	K 15.6	200	250	-	4.2	5.5	-	12	21	26	-
	K 15.7	350	400	700	6.7	10	18 ①	12	21	28	38
	K 15.8	500	630	1000	10	14	28 ①	13	22	32	50
	K 15.8	-	-	1600 ②	-	-	50 ②	-	-	-	85
DN25, 1"	K 25.1	480	630	1000	9.5	14	-	11	24	32	72
	K 25.2	820	1000	1600	15	23	-	11	24	33	74
	K 25.3	1200	1600	2500	22	35	-	11	25	34	75
	K 25.4	1700	2500	4000	37	50	110 ①	12	26	38	78
	K 25.5	3200	4000	6300	62	95	180 ①	13	30	45	103 ③
DN50, 2"	K 55.1	2700	6300	8400	58	80	230 ①	8	13	74	60
	K 55.2	3600	10000	14000	77	110	350 ①	8	13	77	69
	K 55.3	5100	16000	25000	110	150	700 ①	9	13	84	104
DN80, 3"	K 85.1	12000	25000	37000	245	350	1000 ①	8	16	68	95
	K 85.2	16000	40000	64000	280	400	1800 ①	9	16	89	125
DN100, 4"	K105.1	19000	63000	100 000	-	550	2800 ①	-	-	120	220

① P >0.5 bar
② with TR float
③ 300 mbar with damping (gas measurement)

INFORMATION!
The operating pressure should be at least double the pressure loss for liquids and five times for gases. The indicated pressure losses are valid for water and air at maximum flow rate. Other flow ranges on request. Conversion of other media or operating data is performed using the calculation method in accordance with VDI/VDE directive 3513.

Reference condition for gas measurements:
Flow measurements for gases are attributed to:
Nl/h or Nm³/h: Volume flow at standard (norm.) conditions 0°C / +32°F, 1.013 bara / 14.7 psia (DIN 1343)

7 TECHNICAL DATA

H250/RR - stainless steel, H250/HC - Hastelloy®

Measuring span:	10 : 1		
Flow values:	Values = 100%	Water: +20°C / +68°F	Air: +20°C / +68°F, 1.013 bara / 14.7 psia

		Water			Air			Max. pressure loss			
Float ▸		TIV	CIV	DIV	TIV Alu.	TIV	DIV	TIV Alu.	TIV	CIV	DIV
Nominal size	Cone	[GPH]			[SCFM]			[psig]			
DN15, 1/2"	K 15.1	4.76	6.60	-	0.26	0.40	-	0.18	0.31	0.38	-
	K 15.2	7.93	10.6	-	0.43	0.62	-	0.18	0.31	0.38	-
	K 15.3	14.5	16.6	-	0.62	0.93	-	0.18	0.31	0.38	-
	K 15.4	21.1	26.4	-	1.05	1.36	-	0.18	0.31	0.38	-
	K 15.5	31.7	42.3	-	1.55	2.23	-	0.18	0.31	0.38	-
	K 15.6	52.8	66.0	-	2.60	3.41	-	0.18	0.31	0.38	-
	K 15.7	92.5	106	185	4.15	6.20	11.2 ①	0.18	0.31	0.41	0.56
	K 15.8	132	166	264	6.20	8.68	17.4 ①	0.19	0.32	0.47	0.74
	K 15.8	-	-	423 ②	-	-	31.0 ②	-	-	-	1.25
DN25, 1"	K 25.1	127	166	264	5.89	8.68	-	0.16	0.35	0.47	1.06
	K 25.2	217	264	423	9.30	14.3	-	0.16	0.35	0.49	1.09
	K 25.3	317	423	660	13.6	21.7	-	0.16	0.37	0.50	1.10
	K 25.4	449	660	1057	22.9	31.0	68.2 ①	0.18	0.38	0.56	1.15
	K 25.5	845	1057	1664	38.4	58.9	111 ①	0.19	0.44	0.66	1.51 ③
DN50, 2"	K 55.1	713	1664	2219	36.0	49.6	143 ①	0.12	0.19	1.09	0.88
	K 55.2	951	2642	3698	47.7	68.2	217 ①	0.12	0.19	1.13	1.01
	K 55.3	1347	4227	6604	68.2	93.0	434 ①	0.13	0.19	1.23	1.53
DN80, 3"	K 85.1	3170	6604	9774	152	217	620 ①	0.12	0.24	1.00	1.40
	K 85.2	4227	10567	16907	174	248	1116 ①	0.13	0.24	1.31	1.84
DN100, 4"	K105.1	5019	16643	26418	-	341	1736 ①	-		1.76	3.23

① P >7.4 psig
② with TR float
③ 4.4 psig with damping (gas measurement)

INFORMATION!
The operating pressure should be at least double the pressure loss for liquids and five times for gases. The indicated pressure losses are valid for water and air at maximum flow rate. Other flow ranges on request. Conversion of other media or operating data is performed using the calculation method in accordance with VDI/VDE directive 3513.

Reference condition for gas measurements:
Flow measurements for gases are attributed to:
SCFM or SCFH: Volume flow at standard (std.) conditions +15°C / +59°F, 1.013 bara / 14.7 psia (ISO 13443)

H250/C - Ceramic/PTFE

Measuring span:	10 : 1		
Flow values:	Values = 100%	Water: +20°C / +68°F	Air: +20°C / +68°F, 1.013 bara / 14.7 psia

		Flow rate				Max. pressure loss			
		Water		Air		Water		Air	
Liner / Float ▸		PTFE	Ceram.	PTFE	Ceram.	PTFE	Ceram.	PTFE	Ceram.
Nominal size	Cone	[l/h]		[Nm³/h]		[mbar]			
DN15, 1/2"	E 17.2	25	30	0.7	-	65	62	65	62
	E 17.3	40	50	1.1	1.8	66	64	66	64
	E 17.4	63	70	1.8	2.4	66	66	66	66
	E 17.5	100	130	2.8	4	68	68	68	68
	E 17.6	160	200	4.8	6.5	72	70	72	70
	E 17.7	250	250	7	9	86	72	86	72
	E 17.8	400	-	10	-	111	-	111	-
DN25, 1"	E 27.1	630	500	16	18	70	55	70	55
	E 27.2	1000	700	30	22	80	60	80	60
	E 27.3	1600	1100	45	30	108	70	108	70
	E 27.4	2500	1600	70	50	158	82	158	82
	E 27.5	4000 ①	2500	120	75	290	100	194	100
DN50, 2"	E 57.1	4000	4500	110	140	81	70	81	70
	E 57.2	6300	6300	180	200	110	80	110	80
	E 57.3	10000	11000	250	350	170	110	170	110
	E 57.4	16000 ①	-	-	-	284	-	-	-
DN80, 3"	E 87.1	16000	16000	-	-	81	70	-	-
	E 87.2	25000	25000	-	-	95	85	-	-
	E 87.3	40000 ①	-	-	-	243	-	-	-
DN100, 4"	E 107.1	40000	-	-	-	100	-	-	-
	E 107.2	60000 ①	-	-	-	225	-	-	-

① Special float

INFORMATION!
The operating pressure should be at least double the pressure loss for liquids and five times for gases. The indicated pressure losses are valid for water and air at maximum flow rate. Other flow ranges on request. Conversion of other media or operating data is performed using the calculation method in accordance with VDI/VDE directive 3513.

Reference condition for gas measurements:
Flow measurements for gases are attributed to
Nl/h or Nm³/h: Volume flow at standard (norm.) conditions 0°C / +32°F, 1.013 bara / 14.7 psia (DIN 1343)

7 TECHNICAL DATA

H250/C - Ceramic/PTFE

Measuring span:	10 : 1		
Flow values:	Values = 100%	Water: +20°C / +68°F	Air: +20°C / +68°F, 1.013 bara / 14.7 psia

		Flow rate				Max. pressure loss			
		Water		Air		Water		Air	
Liner / Float ▸		PTFE	Ceram.	PTFE	Ceram.	PTFE	Ceram.	PTFE	Ceram.
Nominal size	Cone	[GPH]		[SCFM]		[psig]			
DN15, 1/2"	E 17.2	6.60	7.93	0.43	-	0.94	0.90	0.94	0.90
	E 17.3	10.6	13.2	0.68	1.12	0.96	0.93	0.96	0.93
	E 17.4	16.6	18.5	1.12	1.49	0.96	0.96	0.96	0.96
	E 17.5	26.4	34.3	1.74	2.48	0.99	0.99	0.99	0.99
	E 17.6	42.3	52.8	2.98	4.03	1.04	1.02	1.02	1.02
	E 17.7	66.0	66.0	4.34	5.58	1.25	1.04	1.25	1.04
	E 17.8	106	-	6.2	-	1.61	-	1.61	-
DN25, 1"	E 27.1	166	132	9.92	11.2	1.02	0.80	1.02	0.80
	E 27.2	264	185	18.6	13.6	1.16	0.87	1.16	0.87
	E 27.3	423	291	27.9	18.6	1.57	1.02	1.57	1.02
	E 27.4	660	423	43.4	31.0	2.29	1.19	2.29	1.19
	E 27.5	1056 ①	660	74.4	46.5	4.21	1.45	2.81	1.45
DN50, 2"	E 57.1	1057	1189	68.2	86.8	1.18	1.02	1.18	1.02
	E 57.2	1664	1664	111.6	124	1.60	1.16	1.60	1.16
	E 57.3	2642	2906	155	217	2.47	1.60	2.47	1.60
	E 57.4	4226 ①	-	-	-	4.12	-	-	-
DN80, 3"	E 87.1	4227	4227	-	-	1.18	1.02	-	-
	E 87.2	6604	6604	-	-	1.38	1.23		-
	E 87.3	10567 ①	-	-	-	3.55	-		-
DN100, 4"	E 107.1	10567	-	-	-	1.45	-		-
	E 107.2	15850 ①	-	-	-	3.29	-		-

① Special float

INFORMATION!
The operating pressure should be at least double the pressure loss for liquids and five times for gases. The indicated pressure losses are valid for water and air at maximum flow rate. Other flow ranges on request. Conversion of other media or operating data is performed using the calculation method in accordance with VDI/VDE directive 3513.

Reference condition for gas measurements:
Flow measurements for gases are attributed to:
SCFM or SCFH: Volume flow at standard (std.) conditions +15°C / +59°F, 1.013 bara / 14.7 psia (ISO 13443)

H250H - Horizontal installation position

Measuring span:	10 : 1		
Flow values:	Values = 100%	Water: +20°C / +68°F	Air: +20°C / +68°F, 1.013 bara / 14.7 psia

EN	ASME	Cone	Water [l/h]	Air [Nm³/h]	Pressure loss [mbar]
DN15	1/2"	K 15.1	70	1.8	195
		K 15.2	120	3	204
		K 15.3	180	4.5	195
		K 15.4	280	7.5	225
		K 15.5	450	12	250
		K 15.6	700	18	325
		K 15.7	1200	30	590
		K 15.8	1600	40	950
		K 15.8	2400	60	1600
DN25	1"	K 25.1	1300	35	122
		K 25.2	2000	50	105
		K 25.3	3000	80	116
		K 25.4	5000	130	145
		K 25.5	8500	220	217
		K 25.5	10000	260	336
DN50	2"	K 55.1	10000	260	240
		K 55.2	16000	420	230
		K 55.3	22000	580	220
		K 55.3	34000	900	420
DN80	3"	K 85.1	25000	650	130
		K 85.2	35000	950	130
		K 85.2	60000	1600	290
DN100	4"	K 105.1	80000	2200	250
		K 105.1	120000	3200	340

INFORMATION!
The operating pressure should be at least double the pressure loss for liquids and five times for gases. The indicated pressure losses are valid for water and air at maximum flow rate. Other flow ranges on request. Conversion of other media or operating data is performed using the calculation method in accordance with VDI/VDE directive 3513.

Reference condition for gas measurements:
Flow measurements for gases are attributed to:
Nl/h or Nm³/h: Volume flow at standard (norm.) conditions 0°C / +32°F, 1.013 bara / 14.7 psia (DIN 1343)

7 TECHNICAL DATA

H250H - Horizontal installation position

Measuring span:	10 : 1		
Flow values:	Values = 100%	Water: +20°C / +68°F	Air: +20°C / +68°F, 1.013 bara / 14.7 psia

EN	ASME	Cone	Water [GPH]	Air [SCFM]	Pressure loss [psig]
DN15	1/2"	K 15.1	18.5	1.12	2.87
		K 15.2	31.7	1.86	3.00
		K 15.3	47.6	2.79	2.87
		K 15.4	74.0	4.65	3.31
		K 15.5	119	7.44	3.68
		K 15.6	185	11.2	4.78
		K 15.7	317	18.6	8.68
		K 15.8	423	24.8	14.0
		K 15.8	634	37.2	23.5
DN25	1"	K 25.1	343	21.7	1.79
		K 25.2	528	31.0	1.54
		K 25.3	793	49.6	1.71
		K 25.4	1321	80.6	2.13
		K 25.5	2245	136	3.19
		K 25.5	2642	161	4.94
DN50	2"	K 55.1	2642	161	3.53
		K 55.2	4227	260	3.38
		K 55.3	5812	360	3.23
		K 55.3	8982	558	6.17
DN80	3"	K 85.1	6604	403	1.91
		K 85.2	9246	589	1.91
		K 85.2	15851	992	4.26
DN100	4"	K 105.1	21134	1364	3.68
		K 105.1	31701	1984	5.00

INFORMATION!
The operating pressure should be at least double the pressure loss for liquids and five times for gases. The indicated pressure losses are valid for water and air at maximum flow rate. Other flow ranges on request. Conversion of other media or operating data is performed using the calculation method in accordance with VDI/VDE directive 3513.

Reference condition for gas measurements:
Flow measurements for gases are attributed to
SCFM or SCFH: Volume flow at standard (std.) conditions +15°C / +59°F, 1.013 bara / 14.7 psia (ISO 13443)

H250U - Vertical installation position

Measuring span:	10 : 1		
Flow values:	Values = 100%	Water: +20°C / +68°F	Air: +20°C / +68°F, 1.013 bara / 14.7 psia
Flow direction:	Vertical downwards		

EN	ASME	Cone	Water [l/h]	Air [Nm^3/h]	Pressure loss [mbar]
DN15	1/2"	K 15.1	65	1.6	175
		K 15.2	110	2.5	178
		K 15.3	170	4	180
		K 15.4	260	6	200
		K 15.5	420	10	220
		K 15.6	650	16	290
		K 15.7	1100	28	520
		K 15.8	1500	40	840
DN25	1"	K 25.1	1150	30	97
		K 25.2	1800	45	85
		K 25.3	2700	70	92
		K 25.4	4500	120	115
		K 25.5	7600	200	172
DN50	2"	K 55.1	9000	240	220
		K 55.2	15000	400	230
		K 55.3	21000	550	240

INFORMATION!
The operating pressure should be at least double the pressure loss for liquids and five times for gases. The indicated pressure losses are valid for water and air at maximum flow rate. Other flow ranges on request. Conversion of other media or operating data is performed using the calculation method in accordance with VDI/VDE directive 3513.

Reference condition for gas measurements:
Flow measurements for gases are attributed to:
Nl/h or Nm^3/h: Volume flow at standard (norm.) conditions 0°C / +32°F, 1.013 bara / 14.7 psia (DIN 1343)

7 TECHNICAL DATA

H250U - Vertical installation position

Measuring span:	10 : 1		
Flow values:	Values = 100%	Water: +20°C / +68°F	Air: +20°C / +68°F, 1.013 bara / 14.7 psia
Flow direction:	Vertical downwards		

EN	ASME	Cone	Water [GPH]	Air [SCFM]	Pressure loss [psig]
DN15	1/2"	K 15.1	17.2	0.99	2.57
		K 15.2	29.1	1.55	2.62
		K 15.3	44.9	2.48	2.65
		K 15.4	68.7	3.72	2.94
		K 15.5	111	6.20	3.23
		K 15.6	172	9.92	4.26
		K 15.7	291	17.4	7.64
		K 15.8	396	24.8	12.3
DN25	1"	K 25.1	304	18.6	1.42
		K 25.2	476	27.9	1.25
		K 25.3	713	43.4	1.35
		K 25.4	1189	74.4	1.69
		K 25.5	2008	124	2.53
DN50	2"	K 55.1	2378	149	3.23
		K 55.2	3963	248	3.38
		K 55.3	5548	341	3.53

INFORMATION!
The operating pressure should be at least double the pressure loss for liquids and five times for gases. The indicated pressure losses are valid for water and air at maximum flow rate. Other flow ranges on request. Conversion of other media or operating data is performed using the calculation method in accordance with VDI/VDE directive 3513.

Reference condition for gas measurements:
Flow measurements for gases are attributed to:
SCFM or SCFH: Volume flow at standard (std.) conditions +15°C / +59°F, 1.013 bara / 14.7 psia (ISO 13443)

KROHNE – Process instrumentation and measurement solutions

- Flow
- Level
- Temperature
- Pressure
- Process Analysis
- Services

Head Office KROHNE Messtechnik GmbH
Ludwig-Krohne-Str. 5
47058 Duisburg (Germany)
Tel.: +49 203 301 0
Fax: +49 203 301 10389
info@krohne.com

The current list of all KROHNE contacts and addresses can be found at:
www.krohne.com

© KROHNE 02/2019 - 4007518701 - MA H250-M40 KINAX 3W2 R01 en - Subject to change without notice.

H250 M40 Supplementary Instructions

Equipment category II 2 G and II 2 D, EPL Gb and Db
in protection type intrinsic safety "i"

© KROHNE 05/2018 - 4001481104 - AD H250-M40 ExiII2G R04 en

KROHNE

CONTENTS

1 Safety instructions 3

1.1 General notes 3
1.2 EU conformity 3
1.3 Approval according to the IECEx scheme 3
1.4 Safety instructions 4

2 Device description 5

2.1 Device description 5
2.2 Description code 5
2.3 Marking 6
2.4 Flammable products 7
2.5 Equipment category 7
2.6 Types of protection 8
2.7 Ambient temperature / temperature classes 9
2.8 Surface temperature for equipment category II 2 D 15
2.9 Electrical data 16

3 Installation 17

3.1 Mounting 17
3.2 Special conditions 18

4 Electrical connections 19

4.1 General notes 19
4.2 Power supply 19
4.3 Inputs/Outputs 19
4.4 Grounding and equipotential bonding 20

5 Operation 21

5.1 Start-up 21
5.2 Operation 21
5.3 Electrostatic charge 21

6 Service 22

6.1 Maintenance 22
6.2 Dismantling 22

7 Notes 23

1.1 General notes

This additional instruction applies to explosion-protected versions of variable area flowmeter with electrical built-ins with protection type intrinsic safety "i", equipment category II 2 G and II 2 D or EPL Gb and Db.
It completes the standard documentation for the non-explosion protected versions.

The information given in this instruction contains only the data relevant to explosion protection. The technical details given in the manual for the non-explosion protected versions remain unchanged unless excluded or superseded by this supplementary instruction.

1.2 EU conformity

The manufacturer declares with the EU declaration of conformity, in which the applied standard is also specified, on his own responsibility conformity with the protection goals of directive 2014/34/EU for use in hazardous areas with gas and dust.
The EU declaration of conformity for the equipment category II 2 G and II 2 D is based on the EC type examination certificate of the Physikalisch Technische Bundesanstalt (PTB):

PTB 11 ATEX 2012 X

The "X" after the certificate number refers to special conditions for safe use of the device, which have been listed in these instructions.
If needed the EC type examination certificate can be downloaded from the manufacturer's website.

1.3 Approval according to the IECEx scheme

Conformity of the variable area flowmeter for use in hazardous areas with gas was tested in accordance with the "IECEx Certification Scheme for Explosive Atmospheres" according to IEC 60079-0:2007 and IEC 60079-11:2006.
The number of the IEC certificate is:

IECEx PTB 11.0069 X

The "X" after the certificate number refers to special conditions for safe use of the device, which have been listed in these instructions.
If needed, the IEC certificate can be downloaded from the manufacturer's website.

1.4 Safety instructions

If these instructions are not followed, there is a risk of explosion.

Assembly, installation, start-up and maintenance may only be performed by personnel trained in explosion protection!

CAUTION!
The operator or his agent is responsible for observing any additional standards, directives or laws if required due to operating conditions or place of installation. This applies in particular to the use of easily detachable process connections when measuring flammable media.

2.1 Device description

Variable area flowmeters measure and display the volume flow of flammable and non-flammable gases and liquids. Depending on the device version, electrical limit switch contacts and a 4...20 mA signal output with HART® communication, a Foundation Fieldbus interface or a Profibus PA interface can be installed in the indication unit.

2.2 Description code

The safety description code consists of the following elements *:

Figure 2-1: Safety description code

① **Type series of measuring unit H250**
H250 - standard version, vertical upwards
H250H - horizontal orientation
H250U - vertical downwards

② **Measuring unit materials / versions**
RR - Stainless steel
C - PTFE or PTFE/ceramics
HC - Hastelloy C
Ti - Titanium
F - Food

③ **Heating jacket version**
blank - without heating jacket
B - with heating jacket

④ **Signal converter version**
M40 - aluminium housing, painted (standard)
M40S - aluminium housing with increased corrosion protection
M40R - stainless steel housing

⑤ **High-temperature version**
blank - without HT extension
HT - with HT extension

⑥ **Electrical signal output**
blank - without transmitter
ESK - electrical signal output 4...20 mA (ESK4)
. . . - optionally available with counter, I/O module and display (ESK4-T) or
. . . - Foundation Fieldbus (ESK4-FF) or
. . . - Profibus PA (ESK4-PA)

⑦ **Limit switches**
blank - without limit switches
K1 - one limit switch
K2 - two limit switches
R1 - 1 Reed switch
R2 - 2 Reed switches

⑧ **Version**
Ex - explosion-protected version

⑨ **SIL version**
SE - SIL compliant electronic signal output
SK - SIL compliant limit switch

* positions which are not needed are omitted (no blank positions)

2.3 Marking

The marking of the entire device is clearly visible on the indication unit, in accordance with the designation code.

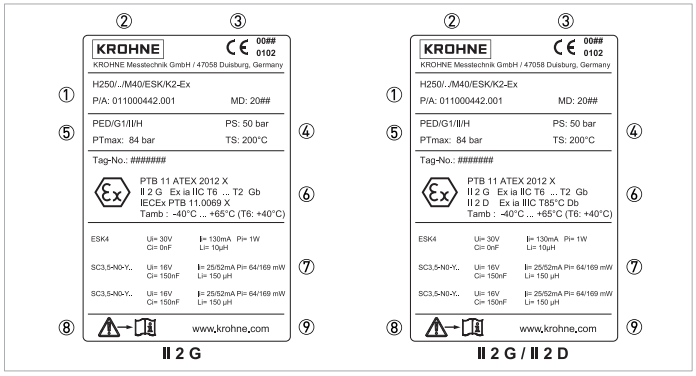

Figure 2-2: Example of an identification plate

① Device type
② Manufacturer
③ Identification number of the notified body ATEX & PED
④ Rating data: temperature & pressure rating
⑤ PED data
⑥ Ex data
⑦ Electrical connection data
⑧ Note to observe the documentation
⑨ Internet site of the manufacturer

Additional markings on the housing cover:

- SN - serial number
- SO - sales order / item
- PA - order
- Vxxx - product configurator code
- AC - article code

Additional plate

The association of the housing cover to the device is confirmed by an additional plate with the serial number on the interior of the indicator part.

2.4 Flammable products

Atmospheric conditions:
The ATEX directive does not stipulate values for atmospheric conditions. However, for determining the explosion characteristic parameters of temperature and pressure range, the following is assumed as a basis:
T_{atm} = -20...+60°C / -4...+140°F and P_{atm} = 0.8...1.1 bar / 11.6...15.9 psi
Outside of these ranges, for most mixtures no key figures are available for the ignition behaviour.

Operating conditions:
Variable area flowmeters operate outside of atmospheric conditions, which means that explosion protection, regardless of the zone assignment, is fundamentally not applicable due to the lack of key safety data for the interior of the measuring unit.

WARNING!
Operation with flammable products is only permitted as long as no explosive fuel/air mixture builds up on the inside of the flowmeter under operating conditions. The operator is responsible to ensure that the flowmeter is operated safely in terms of the temperature and pressure of the products used. In case of operation with flammable products the measuring units must be included in the periodic pressure tests of the system. When using the device version H250/C... (PTFE version, non-conductive) the minimum conductivity of the media must be 10^{-8} S/m, in order to avoid danger from electrostatic charge.

2.5 Equipment category

Variable area flowmeters are designed in accordance with EN 60079-0 and EN 60079-11 in category II 2 G or EPL Gb for use in zone 1.

Depending on the device version, variable area flowmeters are also designed in category II 2 D or EPL Db for use in zone 21.

The inside of the measuring unit is also approved for zone 1.

INFORMATION!
Definition of zone 1 according to EN 1127-1, Appendix B:
An area in which an explosive atmosphere, as a result of the mixture of flammable substances in the form of gas, steam or mist with air, under normal operation may occasionally occur.

Definition of zone 21 according to EN 1127-1, Appendix B:
An area in which an explosive atmosphere may occasionally occur in the form of a cloud of flammable dust in the air under normal operation.

2.6 Types of protection

The variable area flowmeter is designed with protection type intrinsic safety "i" according to EN 60079-11.

The identification for equipment category II 2 G or EPL Gb is:
II 2G Ex ia IIC T6...T2 Gb or II 2G Ex ia IIB T6...T2 Gb

The marking contains the following information:	
II	Explosion protection, group II
2	Equipment category 2
G	Gas explosion protection
Ex ia	Explosion protection through intrinsic safety, protection level "ia"
IIC	Gas group, suitable for gas groups IIC, IIB and IIA
IIB	Gas group, suitable for gas groups IIB and IIA
T6...T2	Temperature class range, suitable for temperature classes T6...T1
Gb	EPL, suitable for zone 1

INFORMATION!
For the equipment category II 2 G and EPL Gb, connection to an intrinsically safe circuit with protection level "ib" is required.
When connecting the variable area flowmeter to an intrinsically safe circuit with protection level "ia", a higher protection level is given.

The additional identification of the version for the equipment category II 2 D and EPL Db is:
II 2D ia IIIC T85 Db

The marking contains the following information:	
II	Explosion protection, group II
2	Equipment category 2
D	Dust ignition protection
Ex ia	Explosion protection through intrinsic safety, protection level "ia"
IIIC	Dust group, suitable for groups IIIC, IIIB and IIIA
T85°C	Maximum surface temperature at 65°C ambient temperature
Db	EPL, suitable for zone 21

INFORMATION!
For the equipment category II 2 D and EPL Db, connection to an intrinsically safe circuit with protection level "ib" is required.
When connecting the variable area flowmeter to an intrinsically safe circuit with protection level "ia", a higher protection level is given.

2.7 Ambient temperature / temperature classes

Due to the influence of the product temperature, variable area flowmeters with built-in electrical equipment (electric variants) are not assigned to any fixed temperature class. The temperature class of these devices is rather a function of the product temperature and ambient temperature that is present and the specific device version. The classification is outlined in the following tables.

The tables take into account the following parameters:

- Built-in equipment
- Maximum values I_i and P_i for K1, K2
- Ambient temperature T_{amb}
- Product temperature T_m
- Nominal size DN
- Standard or high temperature version (HT)
- Standard or heating jacket version
- Heat resistance of the connecting cable

When using more than one installed equipment, the data of the most unfavourable equipment should be used.

INFORMATION!
The maximum permissible product temperatures listed in the tables are valid under the following conditions:

- *The measuring device is installed and operated in accordance with the manufacturer's installation instructions.*
- *It must be ensured that the flowmeter is not heated by the effects of additional heat radiation (sunshine, neighbouring system components) and thus operated above the permissible ambient temperature range.*
- *Insulation must be limited to the piping.*
  Unobstructed ventilation of the indicator part must be ensured.
  For this purpose, the variant with a projecting indicator (HT version) is preferable.
- *For device versions with a heating jacket the temperature of the heating medium does not exceed the maximum permissible product temperature.*

For certain device versions, lower values apply due to differing boundary conditions (e.g. liner materials). Here the user should consult the technical data sheet.

2 DEVICE DESCRIPTION

Using a heat resistant connecting cable

Temperature table in °C					
Heating jacket			T_m ①		
without	with	HT version	$T_{amb} \leq 40$	$T_{amb} \leq 60$	$T_{amb} \leq 65$
DN15, DN25, DN50	DN15, DN25		220	105	75
		x	-	175	95
DN80, DN100	DN50, DN80		165	90	75
		x	-	155	90

Temperature table in °F					
Heating jacket			T_m ①		
without	with	HT version	$T_{amb} \leq 104$	$T_{amb} \leq 140$	$T_{amb} \leq 149$
DN15, DN25, DN50	DN15, DN25		428	221	167
		x	-	347	203
DN80, DN100	DN50, DN80		329	194	167
		x	-	311	194

① Maximum value of the product temperature for the use of a standard connecting cable.
For higher product temperatures a connecting cable with a temperature resistance of 90°C / 194°F is required.
HT version - high-temperature version with projecting indicator

The permitted ambient temperature range is indicated on the nameplate; depending on the device version it is:
T_{amb} = -40...+65°C / -40...+149°F or T_{amb} = -25...+65°C / -13...+149°F

The minimum product temperature is -40°C / -40°F.

Maximum permitted product temperature in °C

				Maximum permissible product temperature T_m [°C]										
Heating jacket			TK ▸	T6	T5		T4		T3			T2, T1		
without	with	HT version	T_{amb} [°C] ▸	≤ 40	≤ 60	≤ 65	≤ 60	≤ 65	≤ 40	≤ 60	≤ 65	≤ 40	≤ 60	≤ 65
ESK4														
DN15 DN25 DN50	DN15 DN25			85	100	90	135	135	200	160	140	235	160	140
		x		85	100	100	135	135	200	200	200	300	300	270
DN80 DN100	DN50 DN80			85	100	85	135	130	200	150	130	220	150	130
		x		85	100	100	135	135	200	200	200	300	300	255
ESK4-T														
DN15 DN25 DN50	DN15 DN25			85	90	70	135	120	200	140	120	220	140	120
		x		85	100	85	135	135	200	200	200	300	290	225
DN80 DN100	DN50 DN80			85	85	70	130	115	200	130	115	200	130	115
		x		85	100	80	135	135	200	200	200	300	270	215
ESK4-FF / ESK4-PA														
DN15 DN25 DN50	DN15 DN25			70	60	not adm.	135	125	200	150	125	235	150	125
		x		85	60		135	135	200	200	200	300	300	240
DN80 DN100	DN50 DN80			65	60		135	120	200	140	120	220	140	120
		x		85	60		135	135	200	200	200	300	300	225
K1/K2 - 64 mW														
DN15 DN25 DN50	DN15 DN25			85	100	100	135	135	200	200	180	290	205	180
		x		85	100	100	135	135	200	200	200	300	300	300
DN80 DN100	DN50 DN80			85	100	100	135	135	200	185	170	260	185	170
		x		85	100	100	135	135	200	200	200	300	300	300
K1/K2 (I7S23,5-N / SC3,5-N0-Y) - 169 mW														
DN15 DN25 DN50	DN15 DN25			not adm.			105	80	200	105	80	210	105	80
		x					135	115	200	200	115	300	200	115
DN80 DN100	DN50 DN80						105	80	195	105	80	195	105	80
		x					135	110	200	190	110	300	190	110
K1/K2 (SJ3,5-SN or SJ3,5-S1N) - 169 mW														
DN15 DN25 DN50	DN15 DN25			not adm.			135	135	200	195	170	295	195	170
		x					135	135	200	200	200	300	300	300
DN80 DN100	DN50 DN80						135	135	200	180	160	275	180	160
		x					135	135	200	200	200	300	300	300
R1/R2 (Reed SPST)														
DN15 DN25 DN50	DN15 DN25	x		85	100	100	135	135	200	200	150	300	235	150
DN80 DN100	DN50 DN80	x		85	100	100	135	135	200	200	145	300	220	145

2 DEVICE DESCRIPTION

Maximum permitted product temperature in °F

				Maximum permissible product temperature T_m [°F]										
Heating jacket			TK ▸	T6	T5		T4		T3			T2, T1		
without	with	HT version	T_{amb} [°F] ▸	≤ 104	≤ 140	≤ 149	≤ 140	≤ 149	≤ 104	≤ 140	≤ 149	≤ 104	≤ 140	≤ 149
ESK4														
DN15 DN25 DN50	DN15 DN25			185	212	194	275	275	392	320	284	455	320	284
		x		185	212	212	275	275	392	392	392	572	572	518
DN80 DN100	DN50 DN80			185	212	185	275	266	392	302	266	428	302	266
		x		185	212	212	275	275	392	392	392	572	572	491
ESK4-T														
DN15 DN25 DN50	DN15 DN25			185	194	158	275	248	392	284	248	428	284	248
		x		185	212	185	275	275	392	392	392	572	554	437
DN80 DN100	DN50 DN80			185	185	158	266	239	392	266	239	392	266	239
		x		185	212	176	275	275	392	392	392	572	518	419
ESK4-FF / ESK4-PA														
DN15 DN25 DN50	DN15 DN25			158	140	not adm.	275	257	392	302	257	455	302	257
		x		185	140		275	275	392	392	392	572	572	464
DN80 DN100	DN50 DN80			149	140		275	248	392	284	248	428	284	248
		x		185	140		275	275	392	392	392	572	572	437
K1/K2 - 64 mW														
DN15 DN25 DN50	DN15 DN25			185	212	212	275	275	392	392	356	554	401	356
		x		185	212	212	275	275	392	392	392	572	572	572
DN80 DN100	DN50 DN80			185	212	212	275	275	392	365	338	500	365	338
		x		185	212	212	275	275	392	392	392	572	572	572
K1/K2 (I7S23,5-N / SC3,5-N0-Y) - 169 mW														
DN15 DN25 DN50	DN15 DN25			not adm.			221	176	392	221	176	410	221	176
		x					275	239	392	392	239	572	392	239
DN80 DN100	DN50 DN80						221	176	383	221	176	383	221	176
		x					275	230	392	374	230	572	374	230
K1/K2 (SJ3,5-SN or SJ3,5-S1N) - 169 mW														
DN15 DN25 DN50	DN15 DN25			not adm.			275	275	392	383	338	563	383	338
		x					275	275	392	392	392	572	572	572
DN80 DN100	DN50 DN80						275	275	392	356	320	527	356	320
		x					275	275	392	392	392	572	572	572
R1/R2 (Reed SPST)														
DN15 DN25 DN50	DN15 DN25	x		185	212	212	275	275	392	392	305	572	460	305
DN80 DN100	DN50 DN80	x		185	212	212	275	275	392	392	295	572	435	295

Maximum permitted product temperatures for painted measuring units in °C

				Maximum permissible product temperature T_m [°C]				
Heating jacket			TK ▸	T6	T5		T4...T1	
without	with	HT version	T_{amb} [°C] ▸	≤ 40	≤ 60	≤ 65	≤ 60	≤ 65
DN15... DN100	DN15... DN80	With / none						
ESK4 / ESK4-T				40	65	65	65	65
ESK4-FF / ESK4-PA				40	60	not adm.	65	65
K1/K2 - 64 mW / R1/R2				40	65	65	65	65
K1/K2 (I7S23,5-N / SC3,5-N0-Y) - 169 mW				not adm.	not adm.		65	65
K1/K2 (SJ3,5-SN bzw. SJ3,5-S1N) - 169 mW				not adm.	not adm.		65	65

Maximum permitted product temperatures for painted measuring units in °F

				Maximum permissible product temperature T_m [°F]				
Heating jacket			TK ▸	T6	T5		T4...T1	
without	with	HT version	T_{amb} [°F] ▸	≤ 104	≤140	≤ 149	≤ 140	≤ 149
DN15... DN100	DN15... DN80	With / none						
ESK4 / ESK4-T				104	149	149	149	149
ESK4-FF / ESK4-PA				104	140	not adm.	149	149
K1/K2 - 64 mW / R1/R2				104	149	149	149	149
K1/K2 (I7S23,5-N / SC3,5-N0-Y) - 169 mW				not adm.	not adm.		149	149
K1/K2 (SJ3,5-SN bzw. SJ3,5-S1N) - 169 mW				not adm.	not adm.		149	149

2 DEVICE DESCRIPTION

Reference point observation

The permissible product and ambient temperatures may be exceeded or undershot as long as the permissible temperature range of the reference point of the display is not exceeded. The following table contains the permissible maximum values at the reference point.
Note:

- Reference point is the connection of the equipotential bonding conductor of the M40 indicator.
- The temperatures at the reference point are to be determined in the most unfavourable operating situation.
- The required measuring uncertainty is max. 2 K.
- Measuring conditions and results are to be permanently recorded in a suitable format.
- The measuring unit should be insulated properly.
- At temperatures above 70°C / 158°F, a heat-resistant cable must be used.

Maximum permitted temperatures at reference point of indicator in °C

Design of indicator	Component	Limit switch P_i [mW]	Permitted temperature range at reference point T [°C] according to temperature class			
			TK ▸	T6	T5	T4...T1
M40./../K.	SC3,5-NO-Y	64		-20...+65	-20...+80	-20...+90
		169		-20...+37	-20...+52	-20...+72
	SJ3,5-SN	64		-40...+66	-40...+81	-40...+90
		169		-40...+42	-40...+57	-40...+86
	SJ3,5-S1N	64		-20...+66	-20...+81	-20...+90
		169		-20...+42	-20...+57	-20..+86
	I7S23,5-N	64		-40...+70	-40...+85	-40...+90
		169		-40...+52	-40...+67	-40...+90
M40./../R.	Reed SPST	1000		-40...+65	-40...+65	-40...+65
M40./../ESK4/K.	SC3,5-NO-Y	64		-20...+55	-20...+70	-20...+80
		169		-20...+33	-20...+48	-20...+68
	SJ3,5-SN	64		-40...+55	-40...+70	-40...+80
		169		-40...+38	-40...+53	-40...+80
	SJ3,5-S1N	64		-20..+55	-20 ...+70	-20...+80
		169		-20...+38	-20...+53	-20...+80
	I7S23,5-N	64		-40...+55	-40...+70	-40...+80
		169		-40...+48	-40...+63	-40...+80
M40./../ESK4/R.	Reed SPST	1000		-40...+55	-40...+65	-40...+65
M40./../ESK4	ESK4	---		-40...+55	-40...+70	-40...+80
M40./../ESK4-T	ESK4 and I/O module	---		-40...+52	-40...+67	-40...+77
M40./../ESK4-FF	ESK4 and ESK4-FF	---		-40...+36	-40...+51	-40...+76
M40./../ESK4-PA	ESK4 and ESK4-PA	---				

Maximum permitted temperatures at reference point of indicator in °F

Design of indicator	Component	Limit switch P_i [mW]	Permitted temperature range at reference point T [°F] according to temperature class			
			TK ▸	T6	T5	T4...T1
M40./../K.	SC3,5-NO-Y	64		-4...+149	-4...+176	-4...+194
		169		-4...+99	-4...+126	-4...+162
	SJ3,5-SN	64		-40...+151	-40...+178	-40...+194
		169		-40...+108	-40...+135	-40...+187
	SJ3,5-S1N	64		-4...+151	-4...+178	-4...+194
		169		-4...+108	-4...+135	-4...+187
	I7S23,5-N	64		-40...+158	-40...+185	-40...+194
		169		-40...+126	-40...+153	-40...+194
M40./../R.	Reed SPST	1000		-40...+149	-40...+149	-40...+149
M40./../ESK4/K.	SC3,5-NO-Y	64		-4...+131	-4...+158	-4...+176
		169		-4...+91	-4...+118	-4...+154
	SJ3,5-SN	64		-40...+131	-40...+158	-40...+176
		169		-40...+100	-40...+127	-40...+176
	SJ3,5-S1N	64		-4...+131	-4...+158	-4...+176
		169		-4...+100	-4...+127	-4...+176
	I7S23,5-N	64		-40...+131	-40...+158	-40...+176
		169		-40...+118	-40...+145	-40...+176
M40./../ESK4/K.	Reed SPST	1000		-40...+131	-40...+149	-40...+149
M40./../ESK4	ESK4	---		-40...+131	-40...+158	-40...+176
M40./../ESK4-T	ESK4 and I/O module	---		-40...+126	-40...+153	-40...+171
M40./../ESK4-FF	ESK4 and ESK4-FF	---		-40...+97	-40...+124	-40...+169
M40./../ESK4-PA	ESK4 and ESK4-PA	---				

2.8 Surface temperature for equipment category II 2 D

For use in areas with flammable dust it should be noted that the indicated maximum surface temperature of T85°C at an ambient temperature of 65°C / 149°F and a product temperature of 85°C / 185°F is valid without a dust coating. For higher product temperatures the maximum surface temperature is defined by the product.

2.9 Electrical data

Electrical equipment	Nominal voltage	Nominal current
Limit switch K1 / K2	8 VDC	≤1 / ≥3 mA
Reed switches R1 / R2	3...30 VDC	0.1...100 mA
Signal output ESK4	14...30 VDC	4...20 mA with HART® communication
Switching output ESK4-T, OC output	8...30 VDC	1...100 mA
Switching output ESK4-T, NAMUR output	8 VDC	≤1 / ≥3 mA
Signal input ESK4-T, input	8...30 VDC	≤2 mA
ESK4-FF Foundation Fieldbus transmitter ①	9...24 VDC	16 mA
ESK4-PA Profibus transmitter ②	9...24 VDC	16 mA

① Further information and instructions for operation of the ESK4-FF transmitter are provided in separate supplementary instructions.

② Further information and instructions for operation of the ESK4-PA Profibus transmitter are provided in separate supplementary instructions.

Built-in equipment for the variable area flowmeter may only be connected to separate intrinsically safe circuits with the following maximum values:

	Maximum values				
Built-in equipment	U_i [V]	I_i [mA]	P_i [mW]	C_i [nF]	L_i [µH]
ESK4	30	130	1000	~ 0	10
ESK4-T (I/O module)	30	130	1000	10	~ 0
ESK4-PA / ESK4 FF ①	24	380	5320	~ 0	~ 0
I7S23,5-N / SC3,5-N0	16	25	64	150	150
	16	52	169	150	150
SJ3,5-SN / SJ3,5-S1N	16	25	64	30	100
	16	52	169	30	100
Reed SPST	30	100	1000	~ 0	~ 0

① FISCO field device

WARNING!
Also, when operating the variable area flowmeter outside of the hazardous area, the connection must be made to an intrinsically safe circuit. When connecting to non-intrinsically safe circuits, there is a risk of damage to the safety-defining components.

3.1 Mounting

Mounting and setup must be carried out according to the applicable installation standards (e.g. EN 60079-14) by qualified personnel trained in explosion protection. The information given in the product documentation and the supplementary instructions must be observed at all times.

Variable area flowmeters must be installed in such a way that

- there is no danger from mechanical impact effects.
- no external forces are affecting the indication unit.
- the device is accessible for any necessary visual inspections and can be viewed from all sides.
- the nameplate is clearly visible.
- it can be operated from a location with secure footing.

Take special note of the installation position for the H250/H/... with horizontal flow direction:

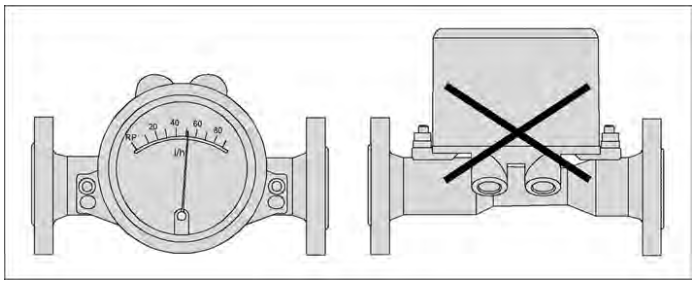

In order to comply with thermal parameters and measuring accuracy, flowmeters for horizontal installation are to be installed in the pipeline so that the display is located on the side of the measuring tube. The maximum product and ambient temperatures indicated as well as the measuring accuracy are based on lateral installation of the display.

CAUTION!
The manufacturer is not liable for any damage resulting from improper use or use other than the intended purpose. This applies in particular to hazards due to insufficient corrosion resistance and suitability of the materials in contact with product.

DANGER!
Components made of titanium in oxygen applications
*Variable area flowmeters with titanium components are **NOT** suitable for use in explosion-protected areas in conjunction with oxygen applications (products with an oxygen content which is significantly above the oxygen content in the earth's atmosphere)!*

3.2 Special conditions

Equipotential bonding

Connect the connection parts for the equipotential bonding of the H250 measuring unit and the M40 indicator to the equipotential bonding system of the hazardous area.

INFORMATION!
The ground terminal on the gate of the cable entry of the display guarantees an electrostatic connection of the device and complies with the requirements of an equipotential bonding connection.

Wetted parts made of titanium

When dealing with device versions with wetted parts made of titanium (TI option), use the protected installation to prevent sparking due to external impact and friction between titanium and other materials.

Flammable products

In case of operation with flammable products the measuring units must be included in the periodic tests of the pipelines and fittings.

IP protection

Use the cable entries and blind plugs supplied or similar types to guarantee an adequate IP protection class. Unused cable entries are to be closed.

Electrostatics

The variable area flowmeter type H250.../../M40./../...../..Ex and the indicator type M40./../...../..Ex have a sight glass that can become electrostatically charged during cleaning. Observe additional information regarding electrostatics.
For further information refer to *Electrostatic charge* on page 21.

Thermal data

Observe the maximum ambient and product temperatures. For further information refer to *Ambient temperature / temperature classes* on page 9.

4.1 General notes

The built-in equipment is connected electrically in the indication unit. The circuits are designed in protection type "intrinsically safe" and galvanically isolated from ground (test voltage ≥ 500 V_{eff}).

The connecting cables should be selected according to the applicable installation standards (e.g. EN 60079-14) and the maximum operating temperature. Ensure that no residual current can form between separate intrinsically safe signal circuits.

- The connecting cables must be fixed and laid so they are sufficiently protected against damage.
- Not used cores must be securely connected to the earth potential of the hazardous area or carefully insulated against each other and against earth (test voltage ≥ 500 V_{eff}).
- Lay cables so as to ensure that there is sufficient distance between surfaces of the measuring unit and the connecting cable.
- Supplied blind plugs / cable entries guarantee protection against foreign objects and water (protection category) IP66 / 67 according to EN 60529.
- The outer diameter of the connecting cable must be within the sealing range of the cable entry (8...13 mm / 0.31...0.51").
- Unused cable entries are to be closed (>IP66/67).

Ensure that the gaskets and incised gasket ring are tight.

4.2 Power supply

The variable area flowmeter does not require a separate power supply. The required supply for the built-in electronics is provided via the 4...20 mA current output or the bus connection.

4.3 Inputs/Outputs

The terminal assignment of the built-in electrical equipment is described in the standard documentation. The signal circuits of the variable area flowmeters may only be connected to certified intrinsically safe slave units or circuits. For more information refer to chapter "Electrical data".

4.4 Grounding and equipotential bonding

The signal converter shall be connected to the equipotential bonding system of the hazardous area via the internal or external grounding connection on the signal converter housing.
The measuring unit and the signal converter are electrically connected via an equipotential bonding connection.

Any existing cable shields should be connected to ground according to applicable installation regulations (EN 60079-14). A terminal in the terminal compartment permits a short way grounding of the cable shields.

Alternatively, the equipotential bonding of the signal converter can also take place by way of the measuring tube incorporated into the equipotential bonding of the hazardous area.

The measuring tube can be incorporated into the equipotential bonding system of the hazardous area using the U-clamp mounted on the flange if present, or suitable conductive connections (gaskets, etc.).

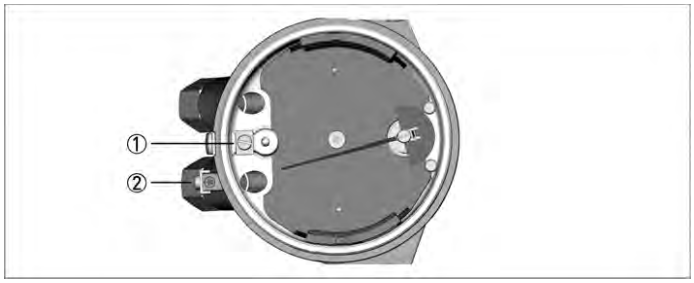

Figure 4-1: Grounding connections

① Grounding connection on the indicator
② Outer grounding connection

5.1 Start-up

Start-up is only permitted when the variable area flowmeter:

- is correctly installed in the system and connected.
- has been checked for the proper state with regard to its installation and connection requirements.

The user of the system must be have it checked before start-up in compliance with the national regulations for checks before start-up.

5.2 Operation

Variable area flowmeters must be operated in such a way that they remain within the maximum and minimum permissible temperatures and pressures and the electrical limit values.

Variable area flowmeters may only be operated if the equipment parts necessary for safety are effective in the long run, and are not rendered inoperable during operation.

Adjusting the limit switch and operating the display during operation is permitted. To do so, remove the housing cover. Close the housing cover immediately after the adjustment of the limit switches or the operation of the display.
For more information refer to chapter "Dismantling".

WARNING!
Ignition risks caused by pressure surges, impact or friction must particularly be avoided when titanium measuring units are used.

5.3 Electrostatic charge

In order to avoid ignition hazards due to electrostatic charge, variable area flowmeters may not be used in areas with:

- processes that generate strong charges,
- mechanical friction and cutting processes,
- spraying of electrons (e.g. in the vicinity of electrostatic painting systems) or
- pneumatically conveyed dust is exposed.

WARNING!
Electrostatic charging of the housing surface by friction must be avoided. The devices must not be dry cleaned.

6 SERVICE

6.1 Maintenance

Maintenance work of a safety-relevant nature within the meaning of explosion protection may only be carried out by the manufacturer, his authorised representative or under the supervision of authorised inspectors.

For systems in hazardous areas, regular tests are required in order to maintain the proper condition.

The following checks are recommended:

- Check the housing, the cable entries and the feed lines for corrosion and/or damage.
- Checking the measuring unit and the piping connections for leakage.
- Check the measuring unit and the indicator for dust deposits.
- Including the flowmeter in the regular pressure test of the process line.

Flameproof joints in the housing

The flameproof thread gap between the cover and the electronics compartment must be inspected visually after opening. The housing must be replaced if there is any damage to the joint area.
The flameproof joints are not intended for repair.

6.2 Dismantling

Exchanging the built-in equipment

Due to the modular design of the variable area flowmeters, from a safety perspective, the electrical equipment built into the indicator can be replaced with identical spare parts.

To do so, remove the housing cover. Close the housing cover immediately after the spare parts are exchanged. Ensure that the cover seal is tight.

CAUTION!
There may be a loss of measuring accuracy!

Exchanging the entire device

The dismantling and installation is within the responsibility of the operator.

Before disconnecting the electric connecting cable of the device, make sure that all cables leading to the indication unit are isolated from the ground of the hazardous area. This also applies to functional earthing conductors (FE) and equipotential bonding conductors (PA).

WARNING!

- *Pressurised pipes have to be depressurised before removing the measuring unit.*
- *In the case of environmentally critical or hazardous products, appropriate safety precautions must be taken with regard to residual liquids in the measuring unit.*
- *New gaskets have to be used when re-installing the device in the pipeline.*

KROHNE – Process instrumentation and measurement solutions

- Flow
- Level
- Temperature
- Pressure
- Process Analysis
- Services

Head Office KROHNE Messtechnik GmbH
Ludwig-Krohne-Str. 5
47058 Duisburg (Germany)
Tel.: +49 203 301 0
Fax: +49 203 301 10389
info@krohne.com

The current list of all KROHNE contacts and addresses can be found at:
www.krohne.com

© KROHNE 05/2018 - 4001481104 - AD H250-M40 ExiII2G R04 en - Subject to change without notice.

A.14.2 Data sheets

H250 M40 Technical Datasheet

Variable area flowmeter

- Secure, cost-effective measurement and display, even without power supply
- A device that meets all Ex requirements, worldwide
- Sturdy, closed design for high resistance to pressure, temperature and product

© KROHNE 10/2018 - 4000685605 - TD H250-M40 R05 en

KROHNE

CONTENTS

1 Product features 3

1.1 Intelligent modularity 3
1.2 Options and variants 5
1.3 Functional principle 7

2 Technical data 8

2.1 Technical data 8
2.2 Dimensions and weight 16
2.3 Measuring ranges 19

3 Installation 27

3.1 Intended use 27
3.2 Installation conditions 28
3.2.1 Tightening torques 30
3.2.2 Magnetic filters 30
3.2.3 Heat insulation 31
3.2.4 Float damping 32
3.2.5 Pointer damping 32

4 Electrical connections 33

4.1 Safety instructions 33
4.2 Electrical connection for indicator M40 34
4.2.1 Connection of the limit switches K1/K2 34
4.2.2 Current output ESK4 / ESK4A 37
4.2.3 ESK4-T limit outputs 40
4.2.4 ESK4-T pulse output 42
4.2.5 ESK4-T binary input 43
4.2.6 ESK4-FF / ESK4-PA fieldbus communication 44
4.3 Grounding connections 45
4.4 Ingress protection 45

5 Order form 46

6 Notes 47

1.1 Intelligent modularity

The H250 all-metal variable area flowmeters cover the entire range of requirements of the process industry. The modular device design and flexible production structure form the basis for application and customer-based device versions.

The basis of the H250 M40 is its purely mechanical design.
Additional electronic modules can be added or replaced at any time without interrupting the process.
This way, the functionality of the device adapts to any changed requirements.
From analogue flow measurement without auxiliary power up to digital integration into a fieldbus system.

Simply screw off the cover, insert the module until it clicks, screw the cover back on and that's it. It is just as easy to replace the measuring scale in the event of a change in application.

① 1 or 2 limit switches, type NAMUR Transistor (3-wire) or Reed

② 2-wire signal output 4...20 mA with HART®

③ Additional LCD for flow rate value and/or volume counter, 2 configurable binary outputs for limit or pulse output and 1 binary input for starting/stopping or resetting the counter.

④ 2-wire fieldbus communication Foundation Fieldbus or Profibus PA

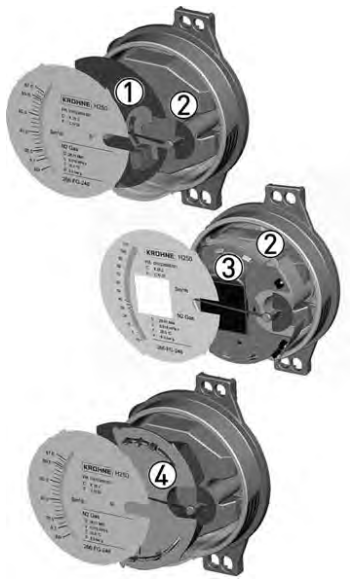

All modules are intrinsically safe (Ex i) and can be built into a secondary pressure containment (Ex d, Ex t, Ex nA) as an option.

1 PRODUCT FEATURES

Highlights

- Simple, low-cost installation: Measurement and indication without auxiliary power supply
- Universal Ex concept: Ex i and Ex d
- Modular scalability – from mechanical to fieldbus
- Any installation position: vertical upward, horizontal, vertical downward
- Robust measuring tube construction for high process temperatures and extreme operating pressures
- Choice of material: stainless steel, Hastelloy®, titanium, Monel, PTFE/TFM etc.
- Many connection variants: flanged, screwed, clamped, weld-on ends etc.
- Extended measuring span: up to 100 : 1
- High application safety, even with extremely low flows

Industries

Can be used in all industrial sectors, for example:

- Chemicals
- Petrochemicals
- Pharmaceuticals
- Machine building
- Food & Beverage
- Oil & Gas
- Iron, Steel & Metals
- Power plants
- Pulp & Paper
- Water & Wastewater

Applications

- Nitrogen inerting to avoid explosive atmospheres
- Measurement of additives such as catalysts, tensides, anti-foaming and anti-corrosion agents
- Measurement of chlorine, sulphur and ethylene compounds
- Measurement of distilled or demineralised water
- Monitoring of lubricating and cooling agents for process pumps and rotating machines
- Monitoring of sealing systems on compressors
- Gas measurement for industrial furnaces
- Hygienic applications in the food industry and in pharmaceuticals

1.2 Options and variants

Robust design for harsh process conditions

(Example: H250 M40R)

The measuring principle allows for a robust, closed design without sensor integration, as the height of the float is transferred to the indicator by way of a magnetic coupling. This enables high pressure versions that can withstand up to 900 barg / 13000 psig.

All wetted, pressurised parts are made as standard of 1.4404/316L stainless steel and meet the requirements of the NACE MR0175 standard.

To guarantee the durability of the device even with chemically harsh products, it is possible to use special materials such as Hastelloy®, titanium, Monel®, etc. in production.

In addition, the H250 M40 is also available with a PTFE liner for applications involving aggressive acids and bases.

Hygienic design for FOOD & PHARMA

(Example: H250F M40R)

Smooth stainless steel surfaces with a surface roughness of ≤ 0.8 µm or 0.6 µm of the wetted parts make it difficult for deposits and are very easy to clean.

Combined with a design featuring no dead spaces or stagnation zones, micro-organisms have no chance to adhere and multiply.
The measuring devices can be cleaned (CIP) and sterilised (SIP) in place.

The appropriate connections and FDA and EC 1935/2023 compliant materials are available for Food & Pharma.

1 PRODUCT FEATURES

Versions for special installation positions

(Example: H250H / H250U)

Variable area flowmeters typically have a vertically positioned measuring cone through which the medium flows from bottom to top, lifting a float against the weight.

If the installation structure does not permit otherwise, versions for horizontal or inverted (from top to bottom) installation positions are used.

The missing reset force of the variable area float weight is replaced by a spring.

Version with extended measuring span 100 : 1

The usual measuring span of the H250 measuring device is 10 : 1.

A measuring span of 100 : 1 can be achieved by inserting a spring which, from a defined float travel, acts as a restoring force in addition to the weight. This eliminates the need for an additional device for minimal volumes.

Display options

M40	Aluminium, two-layer powder coating (epoxy / polyester)
M40R	Stainless steel without coating
M40HT	High temperature version

Offshore wet coating for aluminium or stainless steel housing as well as for the measuring unit on request

1.3 Functional principle

The H250 flowmeter operates in accordance with the float measuring principle. The measuring unit consists of a metal cone in which a float can move freely up and down. The medium flows through the flowmeter from bottom to top. The float adjusts itself so that the buoyancy force F1 acting on it, the form resistance F2 and its weight F3 are in equilibrium: F3 = F1 + F2

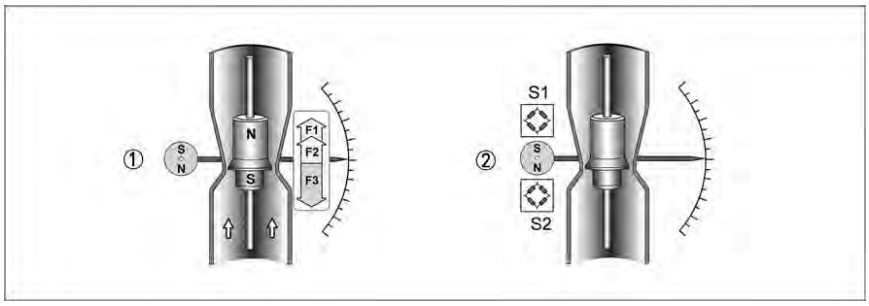

Figure 1-1: Measuring principle - general

① Indication principle M40 magnetic coupling
② Magnetic coupling sensors

① For the indicator, the flow-dependent height of the float in the measuring unit is transmitted by means of a magnetic coupling and displayed on a scale.

② For a built-in signal converter (ESK4 / ESK4A), the flow-dependent height of the float in the measuring unit is detected by the S1 and S2 magnetic field sensors and electronically processed.

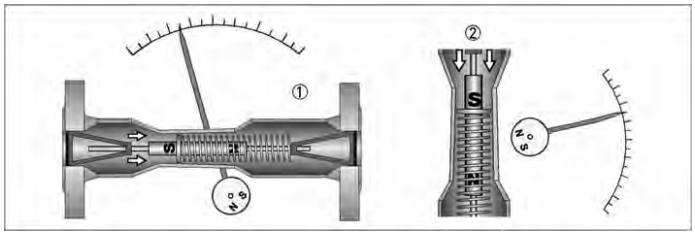

Figure 1-2: Measuring principle for H250H and H250U

① H250H - horizontal flow direction
② H250U - flow direction from top to bottom

The flowmeter operates in accordance with a modified float measuring principle.
The guided float adjusts itself so that the flow force acting on it is in equilibrium with the opposing spring force. The flow-dependent position of the float in the measuring unit is displayed on a scale by means of a magnetic coupling.

2 TECHNICAL DATA

2.1 Technical data

- *The following data is provided for general applications. If you require data that is more relevant to your specific application, please contact us or your local sales office.*
- *Additional information (certificates, special tools, software,...) and complete product documentation can be downloaded free of charge from the website (Downloadcenter).*

Measuring system

Application range	Flow measurement of liquids, gases and vapours
Function / Measuring principle	Float measuring principle
Measured value	
Primary measured value	Float position
Secondary measured value	Operating volume flow, standard volume flow or mass flow

Measuring accuracy

Directive	VDI/VDE 3513, sheet 2 (q_G = 50%)
H250 /RR /HC /F	1.6%
H250/C (ceramic, PTFE), H250H, H250U, H250 (100 : 1)	2.5%
Precision (repeatability)	
H250 /RR /HC /F	0.25%
H250H, H250U, H250 (100 : 1)	0.5%

Operating conditions

Temperature	
Max. operating temperature TS	-196...+300°C / -321...+572°F Depending on the version (refer to nameplate)
Pressure	
Max. operating pressure PS, max. test pressure PT	Depending on the version (refer to nameplate)
Min. required operating pressure	2 times greater than pressure loss (refer to measuring ranges)
Pressure/temperature heating for measuring cone	
DN15...DN50	PS = 40 barg / 580 psig, TS = 300°C / 572°F
DN80...DN100	PS = 25 barg / 363 psig, TS = 300°C / 572°F
Ingress protection	
M40, M40R	IP66/68 according to EN 60529, NEMA 4/4X/6 according to NEMA 250
M40R	IP69K according to DIN 40050-9
Float damping during gas measurement recommended	
DN15...25 / 1/2...1"	Operating pressure <0.3 barg / 4.4 psig
DN50...100 / 2...4"	Operating pressure <0.2 barg / 2.9 psig

Installation conditions according to VDI/VDE 3513, sheet 3

Inlet section	≥ 5 x DN
Outlet section	≥ 3 x DN

Materials

Device	Flange	Measuring tube	Float	Float guide	Ring orifice
H250/RR	CrNi steel 1.4401 / 1.4404, 316 / 316L (dual certification)		1.4404, 316L		
H250/HC	Hastelloy® C4 (2.4610) solid or plated	Hastelloy® C4			
H250/F - Food	CrNi steel 1.4435		CrNi-steel 1.4435 / 1.4404		
H250/C - Ceramic/PTFE ①	CrNi steel 1.4571 with TFM/PTFE ②		PTFE or Al_2O_3 with FFKM gasket	Al_2O_3 and PTFE	Al_2O_3

① DN100/4" only PTFE
② TFM/PTFE liner (electrically non-conductive), conductive PTFE on request

Other options on request:

- Special materials: e.g. SMO 254/6Mo/1.4547, Titanium Grade 2, Hastelloy® C276/2.4819, Monel®/2.4360, Inconel®/2.4856 a.o.
- Float damping: PEEK (only for gas) or ceramic
- Standard gasket for devices with female thread as insert: O-ring FPM / FKM, others optional e.g. FFKM, EPDM

M40	Aluminium, two-layer powder coating (epoxy / polyester)
M40R	Stainless steel without coating 1.4408 / CF8M
Offshore	Wet coating on request

Temperatures

For devices to be used in hazardous areas, special temperature ranges apply. These can be found in the Ex supplementary instructions.

Temperatures H250/M40 - mechanical indicator without auxiliary power

	Material		Product temperature		Ambient temperature	
	Float	Liner	[°C]	[°F]	[°C]	[°F]
H250/RR	Stainless steel		-196...+300	-321...+572	-40...+120	-40...+248
H250/RR screw fitting FPM/FKM			-20...+200	-4...+392	-20...+120	-4...+248
H250/HC	Hastelloy®		-196...+300	-321...+572	-40...+120	-40...+248
H250/C	PTFE		-196...+70	-321...+158	-40...+70	-40...+158
H250/C	Ceramic	PTFE	-196...+150	-321...+302	-40...+70	-40...+158
H250/C	Ceramic	TFM / Ceramic	-196...+250	-321...+482	-40...+120	-40...+248
H250 H/U	Spring material stainless steel 1.4301		-40...+100	-40...+212	-40...+120	-40...+248
	Spring material Hastelloy® 2.4610		-40...+200	-40...+392	-40...+120	-40...+248

2 TECHNICAL DATA

Ambient temperatures T_{amb} with electrical components

Version	[°C]	[°F]
ESK4, ESK4A, ESK4-FF, ESK4-PA ①	-40...+70	-40...+158
Limit switches SJ3,5-SN / I7S23,5-N / Reed SPST	-40...+70	-40...+158
Limit switches SC3,5-N0 / SJ3,5-S1N / SB3,5-E2	-25...+70	-13...+158

① Display contrast out of the temperature range 0...+60°C / +32...+140°F decreasing.

The device must not be heated by radiated heat (e.g. exposure to the sun) to an electronics housing surface temperature above the maximum permissible ambient temperature. A sunshade is available as option.

Maximum product temperatures H250/M40 - with electrical components [°C]

			T_{amb} < +40°C		T_{amb} < +60°C ①	
EN	ASME	Version with	Standard	HT	Standard	HT
DN15, DN25	1/2", 1"	ESK4 / ESK4A, -FF, -PA	+200	+300	+180	+300
		ESK4-T	+200	+300	+140	+290
		Limit switch NAMUR	+200	+300	+200	+300
		Limit switch 3-wire	+200	+300	+130	+295
DN50	2"	ESK4 / ESK4A, -FF, -PA	+200	+300	+165	+300
		ESK4-T	+200	+300	+140	+290
		Limit switch NAMUR	+200	+300	+200	+300
		Limit switch 3-wire	+200	+300	+120	+195
DN80, DN100	3", 4"	ESK4 / ESK4A, -FF, -PA	+200	+300	+150	+250
		ESK4-T	+200	+300	+130	+270
		Limit switch NAMUR	+200	+300	+200	+300
		Limit switch 3-wire	+190	+300	+110	+160

Maximum product temperatures H250/M40 - with electrical components [°F]

			T_{amb} < +104°F		T_{amb} < +140°F ①	
EN	ASME	Version with	Standard	HT	Standard	HT
DN15, DN25	1/2", 1"	ESK4 / ESK4A, -FF, -PA	392	572	356	572
		ESK4-T	392	572	284	554
		Limit switch NAMUR	392	572	392	572
		Limit switch 3-wire	392	572	266	563
DN50	2"	ESK4 / ESK4A, -FF, -PA	392	572	165	572
		ESK4-T	392	572	284	554
		Limit switch NAMUR	392	572	392	572
		Limit switch 3-wire	392	572	248	383
DN80, DN100	3", 4"	ESK4 / ESK4A, -FF, -PA	392	572	302	482
		ESK4-T	392	572	266	518
		Limit switch NAMUR	392	572	392	572
		Limit switch 3-wire	374	572	230	320

① if there are no heat insulation measures, a heat-resistant cable is necessary (continuous operating temperature of the cable to be used: +100°C / +212°F)

Abbreviation

HT	High-temperature version
ESK4 / ESK4A	2-wire current output 4...20 mA with HART 5® / HART 7®
ESK4-T	ESK4 with LCD, binary status outputs, digital counter and pulse output
ESK4-FF	FOUNDATION FIELDBUS interface
ESK4-PA	PROFIBUS PA interface

Cable glands

	Material	Cable diameter	
		[mm]	[Inch]
M20x1.5 Standard	PA	8...13	0.315...0.512
M20x1.5	Nickel-plated brass	10...14	0.394...0.552
M20x1.5	Stainless steel	10...14	0.394...0.552

2 TECHNICAL DATA

Limit switches K1/K2

Terminal connection	2.5 mm^2				
Limit switches	I7S23,5-N SC3,5-N0	SJ3,5-SN ①	SJ3,5-S1N ①	SB3,5-E2	Reed
NAMUR (IEC 60947-5-6)	Yes	Yes	Yes	No	No
Connection type	2-wire	2-wire	2-wire	3-wire	2-wire
Switching element function	Normally closed	Normally closed	Normally open	PNP NO	NC SPST
Nominal voltage U_0	8.2 VDC	8.2 VDC	8.2 VDC	10...30 VDC	max. 32 VDC ②
Pointer vane not detected	≥ 3 mA	≥ 3 mA	≤ 1 mA	≤ 0.3 VDC	U_0
Pointer vane detected	≤ 1 mA	≤ 1 mA	≥ 3 mA	U_B - 3 VDC	0 VDC
Continuous current	-	-	-	Max. 100 mA	Max. 100 mA
No load current I_0	-	-	-	≤ 15 mA	-
Switching cycles	-	-	-	-	100000

① safety oriented
② no inductances

Current output ESK4 / ESK4A

Terminal connection	2.5 mm^2
Power supply	14...32 VDC (12...32 VDC without ESK4-T), intrinsically safe max. 30 VDC
Min. power supply for HART®	20 VDC at 250 Ω load
Measuring signal	4.00...20.00 mA = 0...100% flow value in 2-wire technology
Power supply influence	<0.1%
External resistance dependency	<0.1%
Temperature influence	<5 µA/K
Max. external resistance / load	650 Ω at 30 VDC
Min. load for HART®	250 Ω
NAMUR conformity	NE43, NE107, NE21

ESK4 HART® configuration

Manufacturer name (code)	KROHNE Messtechnik (0x45 = 69)
Model name / HART® revision	ESK4 (214 = 0xD6) / HART 5.9
	ESK4A (17854 = 0x45BE) / HART 7.4
Physical Layer	FSK

ESK4 / ESK4A process variable

	Values [%] from full scale range	Signal output [mA]
Upper range limit	+102.5 (±1%)	20.24...20.56
Device error identification	> 106.25	>21.00 (changeable to 3.6 mA)
Multidrop operation		4.5

ESK4-FF

Physical Layer	IEC 61158-2 and FISCO model
Communication standard	H1 FOUNDATION Fieldbus protocol
ITK version	6.3 (FW ≥ V 2.01)
Power supply	Bus supply: 9...32 VDC, intrinsically safe max. 30 VDC
Nominal current	16 mA typical (17 mA rated)
Error current	23 mA
Boot-up current after 10 ms	< Nominal current

For more details refer to the supplementary instructions "H250 M40 Foundation Fieldbus".

ESK4-PA

Physical Layer	IEC 61158-2 and FISCO model
Communication standard	Profibus PA profile 3.02
PNO ID	4531 HEX
Power supply	Bus supply: 9...32 VDC, intrinsically safe max. 30 VDC
Nominal current	16 mA
Error current	23 mA
Boot-up current after 10 ms	< Nominal current

For more details refer to the supplementary instructions "H250 M40 Profibus PA".

2 TECHNICAL DATA

ESK4-T with LCD, binary inputs and outputs and digital counter

Binary output

Two binary outputs	Galvanically isolated, passive	
Mode	Switching output	NAMUR or transistor (OC)
Configurable as	switch contact or pulse output	NC / NO or max. 10 pulses/s
NAMUR switching output		
Power supply	8.2 VDC	
Signal current	> 3 mA switching value not reached;	< 1 mA switching value reached
Switching output transistor (Open Collector)		
Power supply	Nominal 24 VDC, maximum 30 VDC	
P_{max}	500 mW	
Continuous current	Max. 100 mA	
No load current I_0	≤ 2 mA	

Pulse output

T_{on}	Configurable from 50...500 ms
T_{off}	Depending on flow rate
Pulse weight	Configurable in flow units e.g. 5 pulses/m^3

Binary input

Input	Galvanically isolated
Mode	Reset counters or Start / Stop
Configurable as	active HI / active LO
H signal	16...30 VDC
Internal resistance R_i	Typical 20 kΩ
T_{on} (active)	≥ 500 ms

LC display

Technology	Passive graphic LCD
Display	Measurement with units and/or counter reading with units. Counter reading max. 11-digit with power failure proof storage. Binary flags for limit value status. 0...100% bargraph for measurement. NE 107 diagnostic status symbols. Plain text menu for configuration.
Configuration	Local plain text menu navigation via microswitch or bar magnet or using DD/DTM software

Approvals

Standard	Indicator	Marking
ATEX / IECEx	M40 mechanical	II2GD IIC II3GD IIC
	M40 electrical	II2G Ex ia IIC T6 Gb II2G Ex d IIC T6 Gb II3G Ex nA IIC T6 Gc II2D Ex t IIIC T70°C Db II2D Ex ia IIIC T85°C Db
FM (USA) NEC500 FM (Canada) NEC505	M40 electrical	IS Class I Div 1, Class I Zone 1 AEx ia XP Class I Div 1, Class I Zone 1 AEx d NI Class I Div 2, Class I Zone 2 AEx nA DIP Class II / III Div 1, Class II/III Zone 21 AEx tb
NEPSI	M40 electrical	Ex ia, Ex d, Ex nA, Ex t
CCOE/PESO	M40 electrical	Ex ia, Ex d
EAC	M40 mechanical	Ex c
	M40 electrical	Ex ia, Ex d, Ex nA, Ex t
INMETRO	M40 electrical	Ex ia, Ex d, Ex nA, Ex t
KGS	M40 electrical	Ex ia, Ex d, Ex nA, Ex t

2.2 Dimensions and weight

Dimensions H250/M40

Front view | Side view | with heating | High-temperature

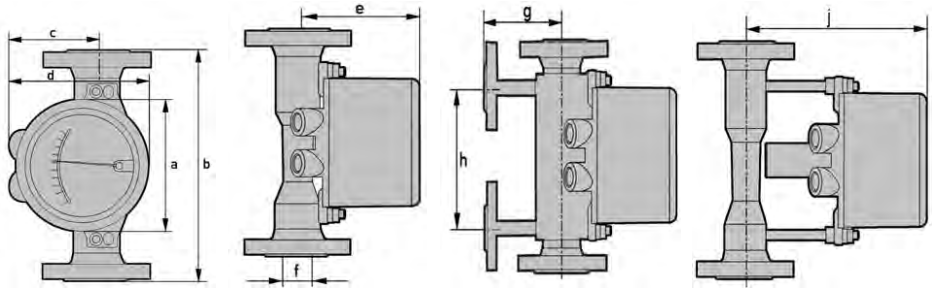

	a		b		d		h	
	[mm]	["]	[mm]	["]	[mm]	["]	[mm]	["]
H250/RR flange, H250/F Clamp connection	141	5.56	250	9.85	150	5.91	150	5.91
H250/RR from 2" 600 lb, ISO 228, ASME B1.20.1, SMS			300	11.82				

EN	ASME	c ①		e ②		Ø f		g		j	
		[mm]	["]	[mm]	["]	[mm]	["]	[mm]	["]	[mm]	["]
DN15	½"	94	3.70	114	4.49	20	0.80	97	3.82	197	7.76
DN25	1"	94	3.70	127	5.00	32	1.28	109	4.27	209	8.23
DN50	2"	107	4.22	141	5.55	65	2.57	125	4.90	222	8.74
DN80	3"	107	4.22	157	6.18	89	3.51	143	5.61	238	9.37
DN100	4"	107	4.22	167	6.57	114	4.50	150	5.91	248	9.76

① without cable gland; ② Ex d, Ex t, Ex nA +10 mm / 0.39"

ISO 228 / ASME B1.20.1 Female thread screwed | ISO 228 / ASME B1.20.1 Female thread welded | H250/F ① Clamp connection | H250/F screw connection DIN 11851

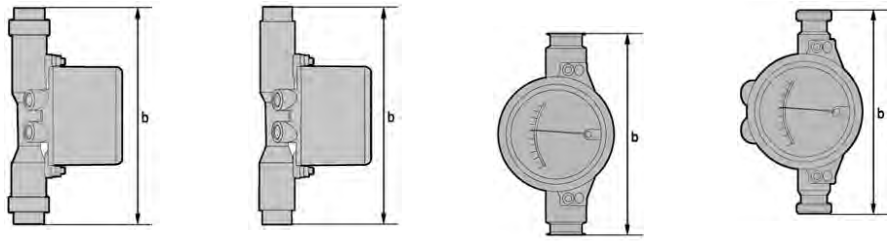

① Stainless steel 1.4435 - wetted surfaces Ra ≤ 0.8 / 0.6 µm

Weight

		H250		Heating			
Nominal size		EN 1092-1		with flange connection		with Ermeto connection	
EN	ASME	[kg]	[lb]	[kg]	[lb]	[kg]	[lb]
DN15	1/2"	3.5	7.7	5.6	12.6	3.9	8.6
DN25	1"	5	11	7.5	16.5	5.8	12.8
DN50	2"	8.2	18.1	11.2	24.7	9.5	21
DN80	3"	12.2	26.9	14.8	32.6	13.1	28.9
DN100	4"	14	30.9	17.4	38.4	15.7	34.6

		H250/C [Ceramic / PTFE]						Screw connection	
Nominal size		EN 1092-1		ASME 150 lb		ASME 300 lb		DIN 11864-1	
EN	ASME	[kg]	[lb]	[kg]	[lb]	[kg]	[lb]	[kg]	[lb]
DN15	1/2"	3.5	7.7	3.2	7.1	3.5	7.7	2	4.4
DN25	1"	5	11	5.2	11.5	6.8	15	3.5	7.7
DN50	2"	10	22.1	10	22.1	11	24.3	5	11
DN80	3"	13	28.7	13	28.7	15	33.1	7.6	16.8
DN100	4"	15	33.1	16	35.3	17	37.5	10.3	22.7

Process connections

	Standard	Conn. dim.	Pressure rating
Flanges (H250/RR /HC /C)	EN 1092-1	DN15...150	PN16...250
	ASME B16.5	1/2...6"	150...2500 lb
	JIS B2220	15...100	10...20K
Clamp connections (H250/RR /F)	DIN 32676	DN15...100	10...16 bar
	ISO 2852	Size 25...139.7	10...16 bar
Screw connections (H250/RR /HC /F)	DIN 11851	DN15...100	25...40 bar
	SMS 1146	1...4"	6 barg / 88.2 psig
Female thread welded (H250/RR /HC)	ISO 228	G1/2...G2"	≥ 50 barg / 735 psig
	ASME B1.20.1	1/2...2" NPT	
Female thread (H250/RR /HC) with insert, FPM gasket and union nut	ISO 228	G1/2...2	≤ 50 barg / 735 psig
	ASME B1.20.1	1/2...2" NPT	
Thread connection aseptic (H250/F)	DIN 11864-1	DN15...50	PN40
		DN80...100	PN16
Flange aseptic (H250/F)	DIN 11864-2	DN15...50	PN40
		DN80...DN100	PN16
Measuring device (H250/RR /HC) with heating:			
Heating with flange connection	EN 1092-1	DN15	PN40
	ASME B16.5	1/2"	150 lb / RF
Heating pipe connection for Ermeto	-	E12	PN40

Higher pressure ratings and other connections on request.

2 TECHNICAL DATA

Bolts and tightening torques

For measuring devices with PTFE liner or ceramic liner and PTFE raised face, tighten the flange threads with the following torques:

Nominal sizes EN

	Stud bolts	Tightening torques	
Nominal size according to EN 1092-1	Quantity x size	[Nm]	[lb-ft]
DN15 PN40 ①	4x M12	9.8	7.1
DN25 PN40 ①	4x M12	21	15
DN50 PN40 ①	4x M16	57	41
DN80 PN16 ①	8x M16	47	34
DN100 PN16 ①	8x M16	67	48

① Standard connections; other connections on request

Nominal size ASME

	Stud bolts		Tightening torques	
Nominal size acc. to ASME B16.5	Quantity x size		[Nm]	[lb-ft]
	150 lb	300 lb		
1/2" 150 lb / 300 lb ①	4x 1/2"	4x 1/2"	5.2	3.8
1" 150 lb / 300 lb ①	4x 1/2"	4x 5/8"	10	7.2
2" 150 lb / 300 lb ①	4x 5/8"	8x 5/8"	41	30
3" 150 lb / 300 lb ①	4x 5/8"	8x 3/4"	70	51
4" 150 lb / 300 lb ①	8x 5/8"	8x 3/4"	50	36

① Standard connections; other connections on request

Pressure tightness (vacuum) H250/C

Max. process temperature ▸			+70°C / +158°F		+150°C / +302°F		+250°C / +482°F	
			Min. operating pressure					
Nominal size	Float	Liner	[mbara]	[psia]	[mbara]	[psia]	[mbara]	[psia]
DN15...100	PTFE	PTFE	100	1.45	-	-	-	-
DN15...80	Ceramic	PTFE	100	1.45	250	3.63	-	-
DN15...80	Ceramic	TFM / Ceramic	100	1.45	100	1.45	100	1.45

2.3 Measuring ranges

H250/RR - stainless steel, H250/HC - Hastelloy®

Measuring span:	10 : 1		
Flow values:	Values = 100%	Water: +20°C / +68°F	Air: +20°C / +68°F, 1.013 bara / 14.7 psia

		Water			Air			Max. pressure loss			
Float ▸		TIV	CIV	DIV	TIV Alu.	TIV	DIV	TIV Alu.	TIV	CIV	DIV
Nominal size	Cone	[l/h]			[Nm³/h]			[mbar]			
DN15, 1/2"	K 15.1	18	25	-	0.42	0.65	-	12	21	26	-
	K 15.2	30	40	-	0.7	1	-	12	21	26	-
	K 15.3	55	63	-	1	1.5	-	12	21	26	-
	K 15.4	80	100	-	1.7	2.2	-	12	21	26	-
	K 15.5	120	160	-	2.5	3.6	-	12	21	26	-
	K 15.6	200	250	-	4.2	5.5	-	12	21	26	-
	K 15.7	350	400	700	6.7	10	18 ①	12	21	28	38
	K 15.8	500	630	1000	10	14	28 ①	13	22	32	50
	K 15.8	-	-	1600 ②	-	-	50 ②	-	-	-	85
DN25, 1"	K 25.1	480	630	1000	9.5	14	-	11	24	32	72
	K 25.2	820	1000	1600	15	23	-	11	24	33	74
	K 25.3	1200	1600	2500	22	35	-	11	25	34	75
	K 25.4	1700	2500	4000	37	50	110 ①	12	26	38	78
	K 25.5	3200	4000	6300	62	95	180 ①	13	30	45	103 ③
DN50, 2"	K 55.1	2700	6300	8400	58	80	230 ①	8	13	74	60
	K 55.2	3600	10000	14000	77	110	350 ①	8	13	77	69
	K 55.3	5100	16000	25000	110	150	700 ①	9	13	84	104
DN80, 3"	K 85.1	12000	25000	37000	245	350	1000 ①	8	16	68	95
	K 85.2	16000	40000	64000	280	400	1800 ①	9	16	89	125
DN100, 4"	K105.1	19000	63000	100 000	-	550	2800 ①	-	-	120	220

① P >0.5 bar
② with TR float
③ 300 mbar with damping (gas measurement)

The operating pressure should be at least double the pressure loss for liquids and five times for gases. The indicated pressure losses are valid for water and air at maximum flow rate. Other flow ranges on request. Conversion of other media or operating data is performed using the calculation method in accordance with VDI/VDE directive 3513.

Reference condition for gas measurements:
Flow measurements for gases are attributed to:
Nl/h or Nm³/h: Volume flow at standard (norm.) conditions 0°C / +32°F, 1.013 bara / 14.7 psia (DIN 1343)

2 TECHNICAL DATA

H250/RR - stainless steel, H250/HC - Hastelloy®

Measuring span:	10 : 1		
Flow values:	Values = 100%	Water: +20°C / +68°F	Air: +20°C / +68°F, 1.013 bara / 14.7 psia

		Water			Air			Max. pressure loss			
Float ▸		TIV	CIV	DIV	TIV Alu.	TIV	DIV	TIV Alu.	TIV	CIV	DIV
Nominal size	Cone	[GPH]			[SCFM]			[psig]			
DN15, 1/2"	K 15.1	4.76	6.60	-	0.26	0.40	-	0.18	0.31	0.38	-
	K 15.2	7.93	10.6	-	0.43	0.62	-	0.18	0.31	0.38	-
	K 15.3	14.5	16.6	-	0.62	0.93	-	0.18	0.31	0.38	-
	K 15.4	21.1	26.4	-	1.05	1.36	-	0.18	0.31	0.38	-
	K 15.5	31.7	42.3	-	1.55	2.23	-	0.18	0.31	0.38	-
	K 15.6	52.8	66.0	-	2.60	3.41	-	0.18	0.31	0.38	-
	K 15.7	92.5	106	185	4.15	6.20	11.2 ①	0.18	0.31	0.41	0.56
	K 15.8	132	166	264	6.20	8.68	17.4 ①	0.19	0.32	0.47	0.74
	K 15.8	-	-	423 ②	-	-	31.0 ②	-	-	-	1.25
DN25, 1"	K 25.1	127	166	264	5.89	8.68	-	0.16	0.35	0.47	1.06
	K 25.2	217	264	423	9.30	14.3	-	0.16	0.35	0.49	1.09
	K 25.3	317	423	660	13.6	21.7	-	0.16	0.37	0.50	1.10
	K 25.4	449	660	1057	22.9	31.0	68.2 ①	0.18	0.38	0.56	1.15
	K 25.5	845	1057	1664	38.4	58.9	111 ①	0.19	0.44	0.66	1.51 ③
DN50, 2"	K 55.1	713	1664	2219	36.0	49.6	143 ①	0.12	0.19	1.09	0.88
	K 55.2	951	2642	3698	47.7	68.2	217 ①	0.12	0.19	1.13	1.01
	K 55.3	1347	4227	6604	68.2	93.0	434 ①	0.13	0.19	1.23	1.53
DN80, 3"	K 85.1	3170	6604	9774	152	217	620 ①	0.12	0.24	1.00	1.40
	K 85.2	4227	10567	16907	174	248	1116 ①	0.13	0.24	1.31	1.84
DN100, 4"	K105.1	5019	16643	26418	-	341	1736 ①	-		1.76	3.23

① P >7.4 psig
② with TR float
③ 4.4 psig with damping (gas measurement)

The operating pressure should be at least double the pressure loss for liquids and five times for gases. The indicated pressure losses are valid for water and air at maximum flow rate. Other flow ranges on request. Conversion of other media or operating data is performed using the calculation method in accordance with VDI/VDE directive 3513.

Reference condition for gas measurements:
Flow measurements for gases are attributed to:
SCFM or SCFH: Volume flow at standard (std.) conditions +15°C / +59°F, 1.013 bara / 14.7 psia (ISO 13443)

H250/C - Ceramic/PTFE

Measuring span:	10 : 1		
Flow values:	Values = 100%	Water: +20°C / +68°F	Air: +20°C / +68°F, 1.013 bara / 14.7 psia

		Flow rate				Max. pressure loss			
		Water		Air		Water		Air	
Liner / Float ▸		PTFE	Ceram.	PTFE	Ceram.	PTFE	Ceram.	PTFE	Ceram.
Nominal size	Cone	[l/h]		[Nm³/h]		[mbar]			
DN15, 1/2"	E 17.2	25	30	0.7	-	65	62	65	62
	E 17.3	40	50	1.1	1.8	66	64	66	64
	E 17.4	63	70	1.8	2.4	66	66	66	66
	E 17.5	100	130	2.8	4	68	68	68	68
	E 17.6	160	200	4.8	6.5	72	70	72	70
	E 17.7	250	250	7	9	86	72	86	72
	E 17.8	400	-	10	-	111	-	111	-
DN25, 1"	E 27.1	630	500	16	18	70	55	70	55
	E 27.2	1000	700	30	22	80	60	80	60
	E 27.3	1600	1100	45	30	108	70	108	70
	E 27.4	2500	1600	70	50	158	82	158	82
	E 27.5	4000 ①	2500	120	75	290	100	194	100
DN50, 2"	E 57.1	4000	4500	110	140	81	70	81	70
	E 57.2	6300	6300	180	200	110	80	110	80
	E 57.3	10000	11000	250	350	170	110	170	110
	E 57.4	16000 ①	-	-	-	284	-	-	-
DN80, 3"	E 87.1	16000	16000	-	-	81	70	-	-
	E 87.2	25000	25000	-	-	95	85	-	-
	E 87.3	40000 ①	-	-	-	243	-	-	-
DN100, 4"	E 107.1	40000	-	-	-	100	-	-	-
	E 107.2	60000 ①	-	-	-	225	-	-	-

① Special float

The operating pressure should be at least double the pressure loss for liquids and five times for gases. The indicated pressure losses are valid for water and air at maximum flow rate. Other flow ranges on request. Conversion of other media or operating data is performed using the calculation method in accordance with VDI/VDE directive 3513.

Reference condition for gas measurements:
Flow measurements for gases are attributed to
Nl/h or Nm³/h: Volume flow at standard (norm.) conditions 0°C / +32°F, 1.013 bara / 14.7 psia (DIN 1343)

2 TECHNICAL DATA

H250/C - Ceramic/PTFE

Measuring span:	10 : 1		
Flow values:	Values = 100%	Water: +20°C / +68°F	Air: +20°C / +68°F, 1.013 bara / 14.7 psia

		Flow rate				Max. pressure loss			
		Water		Air		Water		Air	
Liner / Float ▸		PTFE	Ceram.	PTFE	Ceram.	PTFE	Ceram.	PTFE	Ceram.
Nominal size	Cone	[GPH]		[SCFM]		[psig]			
DN15, 1/2"	E 17.2	6.60	7.93	0.43	-	0.94	0.90	0.94	0.90
	E 17.3	10.6	13.2	0.68	1.12	0.96	0.93	0.96	0.93
	E 17.4	16.6	18.5	1.12	1.49	0.96	0.96	0.96	0.96
	E 17.5	26.4	34.3	1.74	2.48	0.99	0.99	0.99	0.99
	E 17.6	42.3	52.8	2.98	4.03	1.04	1.02	1.02	1.02
	E 17.7	66.0	66.0	4.34	5.58	1.25	1.04	1.25	1.04
	E 17.8	106	-	6.2	-	1.61	-	1.61	-
DN25, 1"	E 27.1	166	132	9.92	11.2	1.02	0.80	1.02	0.80
	E 27.2	264	185	18.6	13.6	1.16	0.87	1.16	0.87
	E 27.3	423	291	27.9	18.6	1.57	1.02	1.57	1.02
	E 27.4	660	423	43.4	31.0	2.29	1.19	2.29	1.19
	E 27.5	1056 ①	660	74.4	46.5	4.21	1.45	2.81	1.45
DN50, 2"	E 57.1	1057	1189	68.2	86.8	1.18	1.02	1.18	1.02
	E 57.2	1664	1664	111.6	124	1.60	1.16	1.60	1.16
	E 57.3	2642	2906	155	217	2.47	1.60	2.47	1.60
	E 57.4	4226 ①	-	-	-	4.12	-	-	-
DN80, 3"	E 87.1	4227	4227	-	-	1.18	1.02	-	-
	E 87.2	6604	6604	-	-	1.38	1.23		-
	E 87.3	10567 ①	-	-	-	3.55	-		-
DN100, 4"	E 107.1	10567	-	-	-	1.45	-		-
	E 107.2	15850 ①	-	-	-	3.29	-		-

① Special float

The operating pressure should be at least double the pressure loss for liquids and five times for gases. The indicated pressure losses are valid for water and air at maximum flow rate. Other flow ranges on request. Conversion of other media or operating data is performed using the calculation method in accordance with VDI/VDE directive 3513.

Reference condition for gas measurements:
Flow measurements for gases are attributed to:
SCFM or SCFH: Volume flow at standard (std.) conditions +15°C / +59°F, 1.013 bara / 14.7 psia (ISO 13443)

H250H - Horizontal installation position

Measuring span:	10 : 1		
Flow values:	Values = 100%	Water: +20°C / +68°F	Air: +20°C / +68°F, 1.013 bara / 14.7 psia

EN	ASME	Cone	Water [l/h]	Air [Nm^3/h]	Pressure loss [mbar]
DN15	1/2"	K 15.1	70	1.8	195
		K 15.2	120	3	204
		K 15.3	180	4.5	195
		K 15.4	280	7.5	225
		K 15.5	450	12	250
		K 15.6	700	18	325
		K 15.7	1200	30	590
		K 15.8	1600	40	950
		K 15.8	2400	60	1600
DN25	1"	K 25.1	1300	35	122
		K 25.2	2000	50	105
		K 25.3	3000	80	116
		K 25.4	5000	130	145
		K 25.5	8500	220	217
		K 25.5	10000	260	336
DN50	2"	K 55.1	10000	260	240
		K 55.2	16000	420	230
		K 55.3	22000	580	220
		K 55.3	34000	900	420
DN80	3"	K 85.1	25000	650	130
		K 85.2	35000	950	130
		K 85.2	60000	1600	290
DN100	4"	K 105.1	80000	2200	250
		K 105.1	120000	3200	340

The operating pressure should be at least double the pressure loss for liquids and five times for gases. The indicated pressure losses are valid for water and air at maximum flow rate. Other flow ranges on request. Conversion of other media or operating data is performed using the calculation method in accordance with VDI/VDE directive 3513.

Reference condition for gas measurements:
Flow measurements for gases are attributed to:
Nl/h or Nm^3/h: Volume flow at standard (norm.) conditions 0°C / +32°F, 1.013 bara / 14.7 psia (DIN 1343)

2 TECHNICAL DATA

H250H - Horizontal installation position

Measuring span:	10 : 1		
Flow values:	Values = 100%	Water: +20°C / +68°F	Air: +20°C / +68°F, 1.013 bara / 14.7 psia

EN	ASME	Cone	Water [GPH]	Air [SCFM]	Pressure loss [psig]
DN15	1/2"	K 15.1	18.5	1.12	2.87
		K 15.2	31.7	1.86	3.00
		K 15.3	47.6	2.79	2.87
		K 15.4	74.0	4.65	3.31
		K 15.5	119	7.44	3.68
		K 15.6	185	11.2	4.78
		K 15.7	317	18.6	8.68
		K 15.8	423	24.8	14.0
		K 15.8	634	37.2	23.5
DN25	1"	K 25.1	343	21.7	1.79
		K 25.2	528	31.0	1.54
		K 25.3	793	49.6	1.71
		K 25.4	1321	80.6	2.13
		K 25.5	2245	136	3.19
		K 25.5	2642	161	4.94
DN50	2"	K 55.1	2642	161	3.53
		K 55.2	4227	260	3.38
		K 55.3	5812	360	3.23
		K 55.3	8982	558	6.17
DN80	3"	K 85.1	6604	403	1.91
		K 85.2	9246	589	1.91
		K 85.2	15851	992	4.26
DN100	4"	K 105.1	21134	1364	3.68
		K 105.1	31701	1984	5.00

The operating pressure should be at least double the pressure loss for liquids and five times for gases. The indicated pressure losses are valid for water and air at maximum flow rate. Other flow ranges on request. Conversion of other media or operating data is performed using the calculation method in accordance with VDI/VDE directive 3513.

Reference condition for gas measurements:
Flow measurements for gases are attributed to
SCFM or SCFH: Volume flow at standard (std.) conditions +15°C / +59°F, 1.013 bara / 14.7 psia (ISO 13443)

H250U - Vertical installation position

Measuring span:	10 : 1		
Flow values:	Values = 100%	Water: +20°C / +68°F	Air: +20°C / +68°F, 1.013 bara / 14.7 psia
Flow direction:	Vertical downwards		

EN	ASME	Cone	Water [l/h]	Air [Nm^3/h]	Pressure loss [mbar]
DN15	1/2"	K 15.1	65	1.6	175
		K 15.2	110	2.5	178
		K 15.3	170	4	180
		K 15.4	260	6	200
		K 15.5	420	10	220
		K 15.6	650	16	290
		K 15.7	1100	28	520
		K 15.8	1500	40	840
DN25	1"	K 25.1	1150	30	97
		K 25.2	1800	45	85
		K 25.3	2700	70	92
		K 25.4	4500	120	115
		K 25.5	7600	200	172
DN50	2"	K 55.1	9000	240	220
		K 55.2	15000	400	230
		K 55.3	21000	550	240

The operating pressure should be at least double the pressure loss for liquids and five times for gases. The indicated pressure losses are valid for water and air at maximum flow rate. Other flow ranges on request. Conversion of other media or operating data is performed using the calculation method in accordance with VDI/VDE directive 3513.

Reference condition for gas measurements:
Flow measurements for gases are attributed to:

Nl/h or Nm^3/h: Volume flow at standard (norm.) conditions 0°C / +32°F, 1.013 bara / 14.7 psia (DIN 1343)

2 TECHNICAL DATA

H250U - Vertical installation position

Measuring span:	10 : 1		
Flow values:	Values = 100%	Water: +20°C / +68°F	Air: +20°C / +68°F, 1.013 bara / 14.7 psia
Flow direction:	Vertical downwards		

EN	ASME	Cone	Water [GPH]	Air [SCFM]	Pressure loss [psig]
DN15	1/2"	K 15.1	17.2	0.99	2.57
		K 15.2	29.1	1.55	2.62
		K 15.3	44.9	2.48	2.65
		K 15.4	68.7	3.72	2.94
		K 15.5	111	6.20	3.23
		K 15.6	172	9.92	4.26
		K 15.7	291	17.4	7.64
		K 15.8	396	24.8	12.3
DN25	1"	K 25.1	304	18.6	1.42
		K 25.2	476	27.9	1.25
		K 25.3	713	43.4	1.35
		K 25.4	1189	74.4	1.69
		K 25.5	2008	124	2.53
DN50	2"	K 55.1	2378	149	3.23
		K 55.2	3963	248	3.38
		K 55.3	5548	341	3.53

The operating pressure should be at least double the pressure loss for liquids and five times for gases. The indicated pressure losses are valid for water and air at maximum flow rate. Other flow ranges on request. Conversion of other media or operating data is performed using the calculation method in accordance with VDI/VDE directive 3513.

Reference condition for gas measurements:
Flow measurements for gases are attributed to:
SCFM or SCFH: Volume flow at standard (std.) conditions +15°C / +59°F, 1.013 bara / 14.7 psia (ISO 13443)

3.1 Intended use

Responsibility for the use of the measuring devices with regard to suitability, intended use and corrosion resistance of the used materials against the measured fluid lies solely with the operator.

This device is a Group 1, Class A device as specified within CISPR11:2009. It is intended for use in industrial environment. There may be potential difficulties in ensuring electromagnetic compatibility in other environments, due to conducted as well as radiated disturbances.

The manufacturer is not liable for any damage resulting from improper use or use for other than the intended purpose.

The variable area flowmeters are suitable for measuring clean gases, vapours and liquids.

Intended use:

- The product may not contain any ferromagnetic particles or solids. It may be necessary to install magnetic filters or mechanical filters.
- The product must be sufficiently liquid and free of deposits.
- Avoid pressure surges and pulsing flows.
- Open valves slowly. Do not use solenoid valves.

Use suitable measures to eliminate compression vibrations during gas measurements:

- Short pipeline lengths to next restriction
- Nominal pipe size not greater than nominal device size
- Use of floats with damping
- Increase in operating pressure (while taking into account the resulting change in density and thus change in scale)

Observe installation conditions according to VDI/VDE 3513-3.

For devices used in hazardous areas, additional safety notes apply; please refer to the Ex documentation.

Do not use any abrasive media containing solid particles or highly viscous media.

3.2 Installation conditions

When installing the device in the piping, the following points must be observed:

- *The variable area flowmeter must be installed vertically (measuring principle). Flow direction from bottom to top. For installation recommendations please refer also to directive VDI/VDE 3513, sheet 3.*

  H250Hs are installed horizontally and H250U devices are installed vertically with the flow direction from top to bottom.
- *A straight unimpeded inlet run of ≥ 5 DN upstream of the device and a straight outlet run of ≥ 3 DN downstream of the device are recommended.*
- *Screws, bolts and gaskets are to be provided by the customer and must be selected in accordance with the pressure rating of the connection or the operating pressure.*
- *The inner diameter of the flange deviates from the standard dimensions. Flange seal standard DIN 2690 or ASME B16.21 can be applied.*
- *Align the gaskets. Tighten the nuts with the tightening torques of the appropriate pressure rating.*

  For devices with PTFE liner or ceramic liner and PTFE raised faces, refer to chapter "Tightening torques".
- *Control devices are to be positioned downstream of the measuring device.*
- *Shutoff devices are preferably to be positioned upstream of the measuring device.*
- *Before connecting, blow or flush out the pipes leading to the device.*
- *Piping for gas flow need to be dried before the device is installed.*
- *Use connectors suitable for the particular device version.*
- *Align the piping centrically with the connection bores on the measuring device so they are free of stresses.*
- *If necessary, the piping has to be supported to reduce the vibrations transmitted to the measuring device.*
- *Do not lay signal cables directly next to cables for the power supply.*

Minimum distance between devices

When several devices are installed next to each other, a minimum distance of > 300 mm / 11.8" between the devices is necessary.

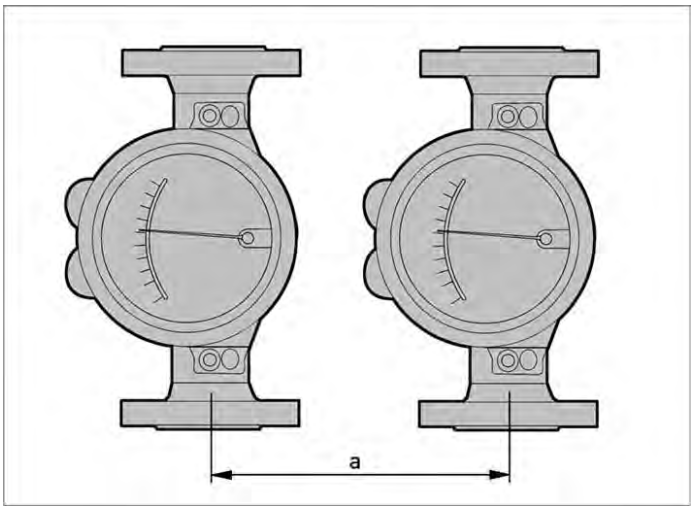

Figure 3-1: Minimum distance between devices

Take special note of the installation position for the H250H with horizontal flow direction:

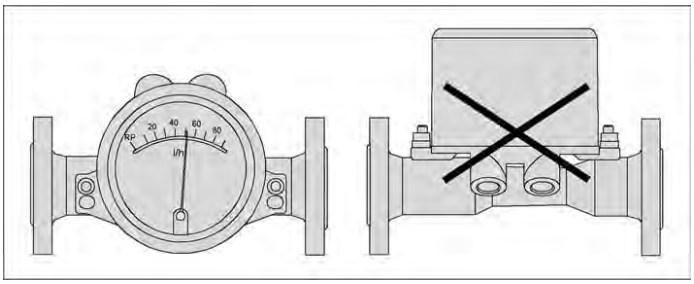

Figure 3-2: Installation position for H250H

In order to comply with thermal parameters and measuring accuracy, H250H flowmeters for horizontal installation are to be installed in the pipeline so that the display is located on the side of the measuring tube. The maximum product and ambient temperatures indicated as well as the measuring accuracy are based on lateral installation of the indicator.

3.2.1 Tightening torques

For devices with PTFE liner or ceramic liner and PTFE raised face, tighten the flange threads with the following torques:

Nominal size according to				Stud bolts			Max. torque			
EN 1092-1		ASME B16.5		EN	ASME		EN 1092-1		ASME 150 lb	
DN	PN	Inch	lb		150 lb	300 lb	Nm	ft*lbf	Nm	ft*lbf
15	40	1/2"	150/300	4x M12	4x 1/2"	4x 1/2"	9.8	7.1	5.2	3.8
25	40	1"	150/300	4x M12	4x 1/2"	4x 5/8"	21	15	10	7.2
50	40	2"	150/300	4x M16	4x 5/8"	8x 5/8"	57	41	41	30
80	16	3"	150/300	8x M16	4x 5/8"	8x 3/4"	47	34	70	51
100	16	4"	150/300	8x M16	8x 5/8"	8x 3/4"	67	48	50	36

Table 3-1: Tightening torques

3.2.2 Magnetic filters

The use of magnetic filters is recommended when the medium contains particles which can be influenced magnetically. The magnetic filter is to be installed in the flow direction upstream of the flowmeter. Bar magnets are positioned helically in the filter to provide optimal efficiency at low pressure loss. All of the magnets are coated individually with PTFE to protect against corrosion. Material: 1.4404 / 316L

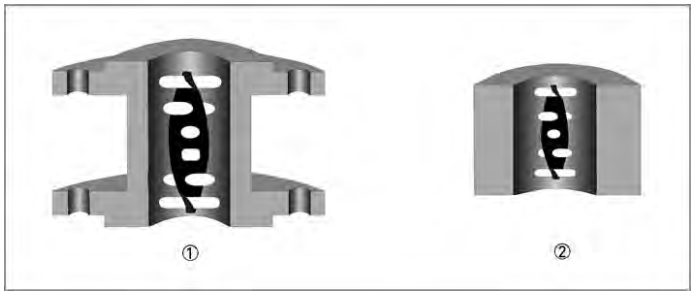

Figure 3-3: Types of magnetic filters

① Type F - fitting part with flange - overall length 100 mm / 4"
② Type FS - fitting part without flange - overall length 50 mm / 2"

3.2.3 Heat insulation

The indicator housing may not be heat-insulated.
The heat insulation ③ may only reach as far as the housing fastening ④.

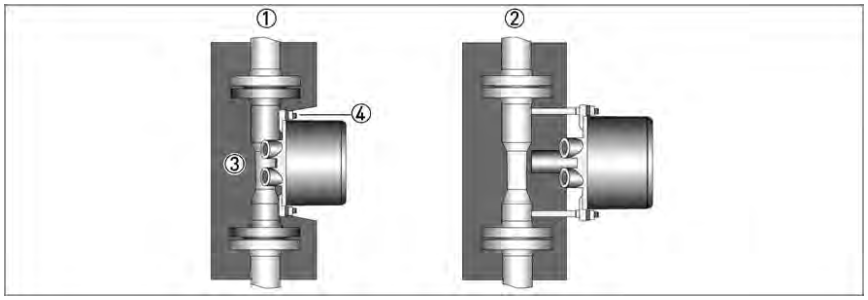

Figure 3-4: Heat insulation

① Standard indicator M40
② Indicator with HT extension

The heat insulation ① may only reach to the rear of the housing ②. The area around the cable entries ③ must be freely accessible.

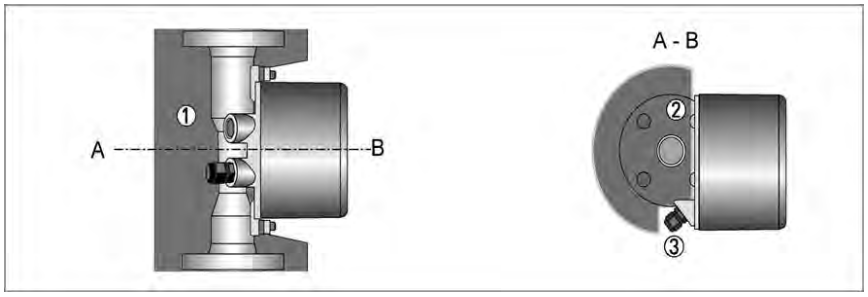

Figure 3-5: Heat insulation - cross-section

3.2.4 Float damping

Float damping is characterised by high standstill times and self-centering. The damping sleeve is made of high performance ceramic or PEEK, depending on the medium and the application. Float damping can also be retrofitted for the user (refer to "Service").

Use of damping

- Generally when CIV and DIV floats are used for gas measurement.
- For TIV floats (H250/RR and H250/HC only) with an operating primary pressure:

Nominal size according to		Operating primary pressure	
EN 1092-1	ASME B16.5	[bar]	[psig]
DN50	1/2"	≤0.3	≤4.4
DN25	1"	≤0.3	≤4.4
DN50	2"	≤0.2	≤2.9
DN80	3"	≤0.2	≤2.9
DN100	4"	≤0.2	≤2.9

3.2.5 Pointer damping

In principle, the indicating element with its magnetic system contains indicator damping.
An additional eddy current brake is advantageous in the event of fluctuating or pulsing flows.
The magnets on the eddy current brake surround the pointer vane without touching it, damping its movement. The result is a much steadier pointer position, without distorting the measured value. The eddy current brake can be retrofitted during operation without recalibration.
Note the maximum tightening torque (0.12 Nm) for the turnbuckle!

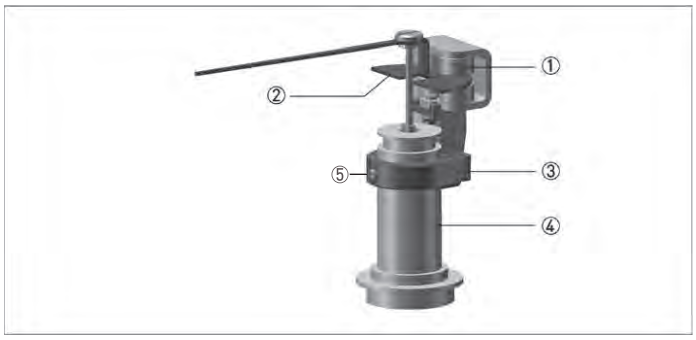

Figure 3-6: Pointer damping

① Eddy current brake
② Pointer vane
③ Support
④ Pointer cylinder
⑤ Turnbuckle, max. tightening torque is 0.12 Nm

4.1 Safety instructions

All work on the electrical connections may only be carried out with the power disconnected. Take note of the voltage data on the nameplate!

Observe the national regulations for electrical installations!

For devices used in hazardous areas, additional safety notes apply; please refer to the Ex documentation.

Observe without fail the local occupational health and safety regulations. Any work done on the electrical components of the measuring device may only be carried out by properly trained specialists.

Look at the device nameplate to ensure that the device is delivered according to your order. Check for the correct supply voltage printed on the nameplate.

4.2 Electrical connection for indicator M40

4.2.1 Connection of the limit switches K1/K2

The M40 indicator can be fitted with a maximum of two limit switches.
The limit switch operates as a proximity switch which is activated inductively by the semicircular metal vane of the pointer. The switching points are set using the contact pointers.
The position of the contact pointers is indicated on the scale.

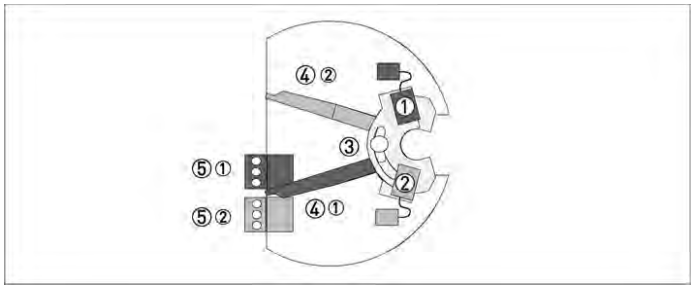

Figure 4-1: Design of limit switch module

① MIN contact
② MAX contact
③ Locking screw
④ Peak value
⑤ Connection terminal

The connection terminals have a pluggable design and can be removed to connect the cables.
The built-in limit switch types are shown on the nameplate of the indicator.

Contact	MIN			MAX		
Terminal number	1	2	3	4	5	6
Connection 2-wire NAMUR	-	+		-	+	
Connection 3-wire	+	⎍	-	+	⎍	-
Connection Reed SPST	+		-	+		-

Table 4-1: Electrical connection of the limit switches

Connection diagram for the limit switches

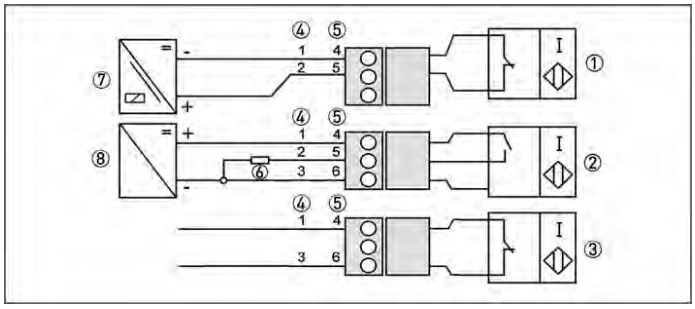

Figure 4-2: Connection terminals for limit switches

① Limit switch 2-wire NAMUR
② Limit switch 3-wire
③ Limit switch Reed SPST
④ Terminal connection of Min. contact
⑤ Terminal connection of Max. contact
⑥ 3-wire load
⑦ NAMUR isolated switching amplifier
⑧ 3-wire power supply

Limit setting

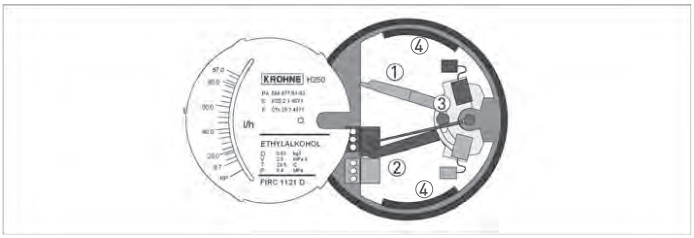

Figure 4-3: Limit setting

① Contact pointer MAX
② Contact pointer MIN
③ Locking screw (max. tightening torque is 0.2 Nm)
④ Scale support

Setting is carried out directly via contact pointers ① and ②:

- Pull the upper scale support 2 mm / 0.08" flexibly upwards and pull out the scale from its locking point to the side.
- Loosen the locking screw ③ slightly.
- Slide in the scale up to the locking point.
- Set contact pointers ① and ② to the desired switching point.

After the setting:

- Pull the upper scale support 2 mm / 0.08" flexibly upwards and pull out the scale again from its locking point to the side.
- Tighten the locking screw ③ with max. 0.2 Nm.
- Slide in the scale up to the locking point.

If the maximum torque (0.2 Nm) is exceeded, the locking screw can be torn off during tightening!

Definition of switch contact

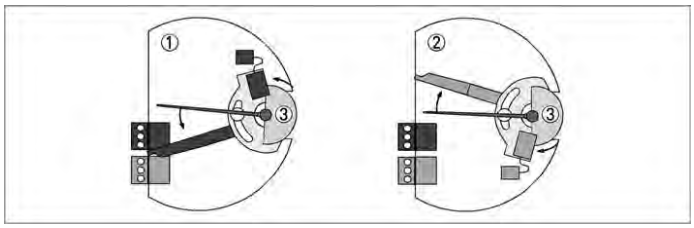

Figure 4-4: Definition of switch contact

① MIN contact
② MAX contact
③ Pointer vane with switching vane

If the pointer vane goes into the slot, an alarm is triggered.
If the pointer vane is outside of the proximity switch, a wire break in a NAMUR contact also triggers the alarm.

The 3-wire limit switch does not have any wire break detection.

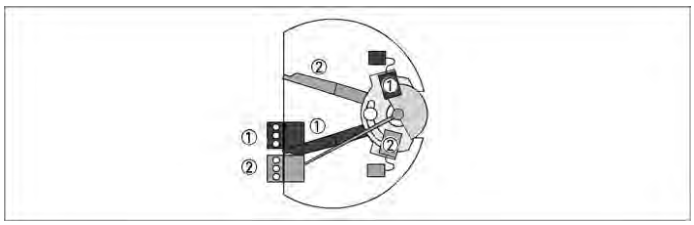

Figure 4-5: Definition MIN-MIN - MAX-MAX

① MIN 2 contact or MAX 1 contact
② MIN 1 contact or MAX 2 contact

Contact	Type	Current consumption
MIN 1	NAMUR	≤ 1 mA
MIN 2	NAMUR	≤ 1 mA
MAX 1	NAMUR	≥ 3 mA
MAX 2	NAMUR	≥ 3 mA

Table 4-2: Current consumption in the position shown:

4.2.2 Current output ESK4 / ESK4A

The connecting terminals of the ESK4 / ESK4A have a pluggable design and can be removed in order to connect the cables.

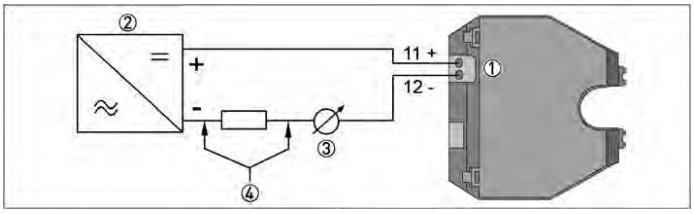

Figure 4-6: ESK4 / ESK4A connection

① Current output of ESK4 / ESK4A
② Power supply 14...30 VDC
③ Measuring signal 4...20 mA
④ External load, HART® communication

Power supply M40 with galvanic isolation

Wiring must be planned with great care when it comes to connecting other devices such as evaluation units or process control. Internal connections in these devices (e.g. GND with PE, mass loops) may lead to non-permitted voltage potentials which could negatively affect the function of the converter itself or that of a device connected to it. In such cases a protected extra-low voltage (PELV) is recommended.

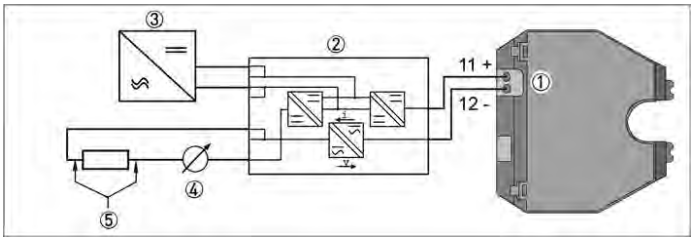

Figure 4-7: Power supply M40 with galvanic isolation

① Terminal connection
② Converter supply isolator with galvanic isolation
③ Power supply (refer to isolator information)
④ Measuring signal 4...20 mA
⑤ External load, HART® communication

4 ELECTRICAL CONNECTIONS

Power supply

The supply voltage has to be between 14 VDC and 30 VDC. This is based on the total resistance of the measuring loop. To calculate this, the resistance of each component in the measuring loop (not including the device) must be added up.

The required supply voltage can be calculated using the following formula:

$U_{ext.} = R_L * 24\ mA + 14\ V$

with
$U_{ext.}$ = minimum supply voltage
R_L = total measuring loop resistance

The power supply has to be able to supply a minimum of 30 mA.

HART® communication

When HART® communication is carried out with the ESK4, the analogue measured data transmission (4...20 mA) is not impaired in any way.

Exception for multidrop operation. In multidrop operation a maximum of 15 devices with HART® function can be operated in parallel, whereby their current outputs are switched to inactive (I approx. 4 mA per device).

Load for HART® communication

For HART® communication a load of at least 230 Ω is required.

The maximum load resistance is calculated as follows:

$$R_L = \frac{U_{ext.} - 14V}{24mA}$$

Use a twisted two-core cable to prevent electrical interference from impeding the DC output signal.
In some cases a shielded cable may be necessary, e.g if noise levels higher than the NE 21 specification are anticipated.

Configuration

The ESK can be configured via HART® communication. DD (Device Description) for AMS and PDM as well as a DTM (Device Type Manager) for PACTware™ are available for the configuration. They can be downloaded free of charge from the website of the manufacturer.

The current flow rate can be transmitted using the integrated HART® communication. A flow counter can be configured. Two limit values can be monitored. The limit values are assigned either to flow values or to the counter overflow.

Self monitoring - Diagnostics

During both start-up and operation, a wide variety of diagnostic functions are performed cyclically in the ESK4 / ESK4A in order to guarantee function reliability. When an error is detected, a failure signal (high) is activated (current > 21 mA, typically 22 mA) via the analogue output. In addition more detailed information can be requested via HART® (CMD#48). The failure signal is not activated for information and warnings.

Diagnostic functions (Monitoring):

- Plausibility of FRAM data
- Plausibility of ROM data
- Working range of internal reference voltages
- Signal detection of the measuring range of the internal sensors
- Temperature compensation of the internal sensors
- Calibration based on the application
- Plausibility of counting value
- Plausibility of physical unit, system and selected unit

For ESK4A (HART® 7) the diagnosis is reported in compliance with NE 107.

4.2.3 ESK4-T limit outputs

Once the housing cover has been unscrewed, the scale can be removed. The connection terminals have a pluggable design and can be removed to connect the cables.

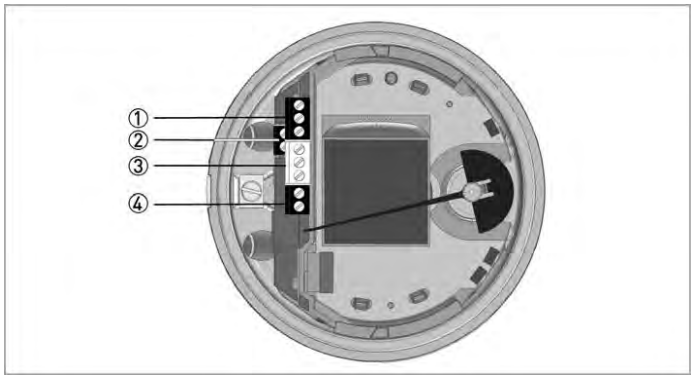

Figure 4-8: Position of the connection terminals

① Binary output 1
② ESK4 / ESK4A power supply / current output
③ Binary output 2
④ Binary input

The binary inputs/outputs are electrically isolated from each other and from the ESK4 / ESK4A current output.

The binary inputs/outputs can only be operated if the power supply is applied to ESK4 / ESK4A terminal 11+ and 12-. The binary inputs/outputs are inactive by default and must thus be activated prior to first use.

Connection binary outputs
In accordance with the desired signal transmission, select one of the following connection types for binary outputs B1 and B2:

- NAMUR (DC interface acc. to EN 60947-5-6)
- Transistor output (passive, Open Collector)

Binary output	B1			B2		
Terminal no.	1	2	3	4	5	6
Connection NAMUR	+	-		+	-	
Connection transistor output	+		B_{OC}	+		B_{OC}

Table 4-3: Terminal assignment of the binary output

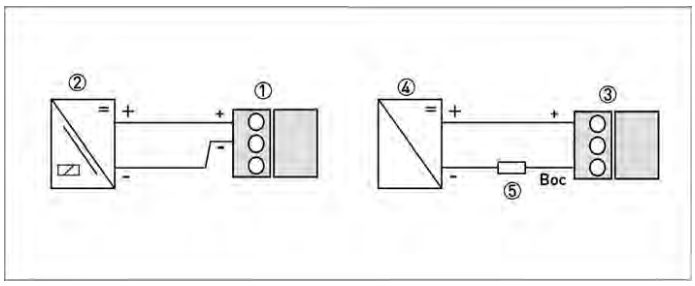

Figure 4-9: Connection switching output

① NAMUR terminal connection
② Isolated switching amplifier
③ OC switch output terminal connection
④ Power supply $U_{ext.}$
⑤ Load R_L

	NC contact	NO contact
Switching value reached	< 1 mA	> 3 mA
Switching value not reached	> 3 mA	< 1 mA

Table 4-4: Value range for NAMUR

Value range applies only when connected to a switching amplifier with the following reference values:

- Open-circuit voltage U_0 = 8.2 VDC
- Internal resistance R_i = 1 kΩ

Signal voltages	U_L [V]		U_H [V]	
	lower limit	upper limit	lower limit	upper limit
via load R_L	0	2	16	30

Table 4-5: Value range for transistor output

Signal currents	I_L [mA]		I_H [mA]	
	lower limit	upper limit	lower limit	upper limit
Category 2	0	2	20	110

Table 4-6: Value range for transistor output

To ensure the value ranges, a load R_L between 250 Ω and 1 kΩ is recommended for the passive transistor output with a nominal voltage of 24 VDC.

If other loads are used, caution is advised as the range of values of the signal voltages then no longer corresponds to the range of values for the inputs of process control systems and controls (DIN IEC 946).

The upper limit of the signal current must not be exceeded as this may damage the transistor output.

4.2.4 ESK4-T pulse output

The binary outputs can also be operated as pulse outputs. When using the binary outputs as a pulse output, two separate signal circuits are required. Each signal circuit requires its own power supply.
The total resistance ④ must be adapted so that the total current I_{tot} does not exceed 100 mA.

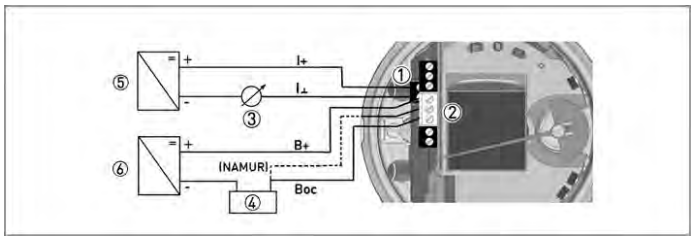

Figure 4-10: Electrical connection of pulse output

① Terminal for power supply - current output
② Terminal B2
③ Flow measurement 4...20 mA
④ Pulse output load e.g. counter
⑤ Power supply for ESK4
⑥ Power supply for pulse output

The pulse output B2 is a passive "open collector" output which is electrically isolated from the current output and output B1. It can be operated as a low-resistance output or as a NAMUR output.

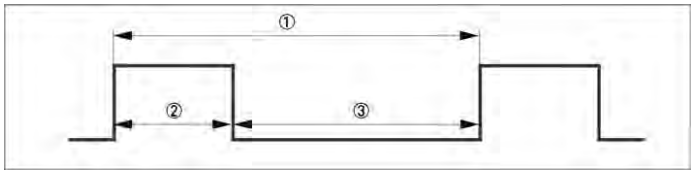

Figure 4-11: Data for pulse output

① f_{max} = 10 Hz
② t_{on}
③ t_{off}

The pulse width t_{on} can be configured from 50...500 ms in the indicator menu.

4.2.5 ESK4-T binary input

The binary input can be used to control the internal flow counter (start/stop/reset).

Binary input	B3	
Terminal no.	7	8
Connection	+	-

Table 4-7: Value range for NAMUR

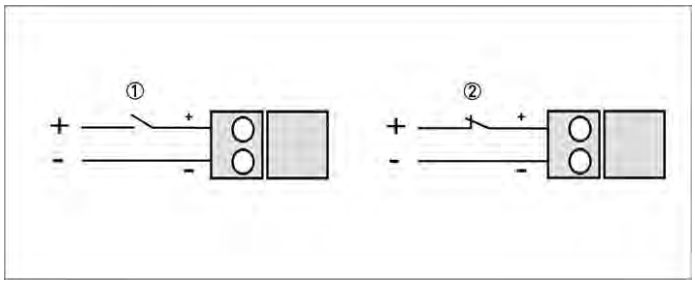

Figure 4-12: Binary input

① Function active HI
② Function active LO

This binary input can be activated in the menu of the indicator and can be configured to ACTIVE HI or ACTIVE LO.

If the input is set as ACTIVE LO, an interruption causes the counter to be reset.

Input voltage	U_L [V]		U_H [V]	
	lower limit	upper limit	lower limit	upper limit
Terminal (7) (8)	0	2	16	30

Table 4-8: Value range

The binary input has an internal resistance R_i of 20 kΩ.

4.2.6 ESK4-FF / ESK4-PA fieldbus communication

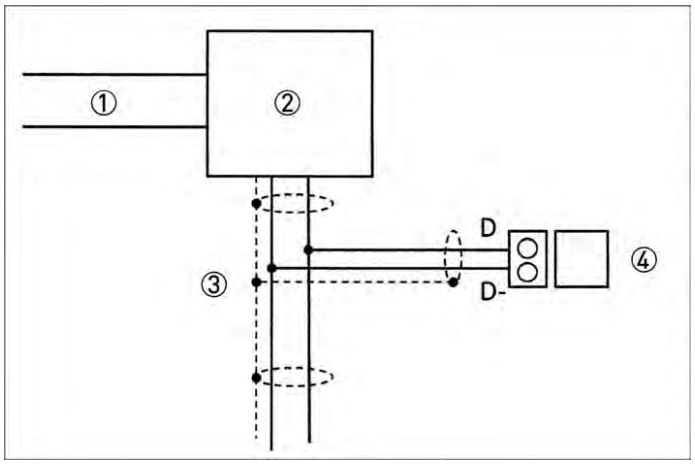

Figure 4-13: ESK4-FF / ESK4-PA fieldbus communication

① FF HSE Bus / Profibus DP
② Linking device / bus coupler
③ FF H1 Bus / Profibus PA, 2-wire with shielding
④ H250/M40/ESK4-FF / H250/M40/ESK4-PA

ESK4-FF / ESK4-PA

- 2-wire, bus-supplied
- Polarity protected
- Bus voltage 9...32 VDC
- Nominal current 16 mA

4.3 Grounding connections

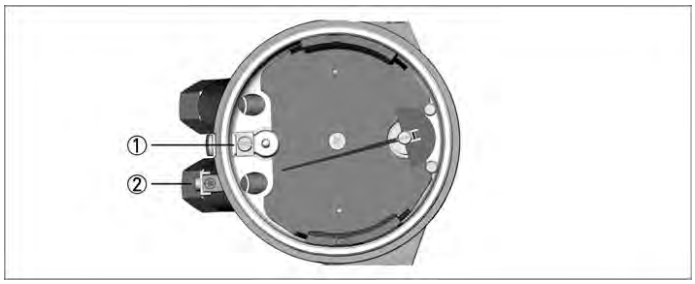

Figure 4-14: Grounding connections

① Grounding connection on the indicator
② Outer grounding connection

The grounding wire may not transfer any interference voltage.
Do not use this grounding cable to ground any other electrical devices.

4.4 Ingress protection

The measuring device meets all requirements of ingress protection IP66/68.

After all servicing and maintenance work on the measuring device, the specified protection class must be ensured again.

Therefore it is essential to observe the following points.

- Use only original gaskets. They must be clean and free of any damage. Defective gaskets must be replaced.
- The electrical cables must be undamaged and must comply with regulations.
- The cables must be laid with a loop ③ upstream of the measuring device to prevent water from getting into the housing.
- The cable feedthroughs ② must be tightened.
- Close the unused cable feedthroughs using blanking plugs ①.

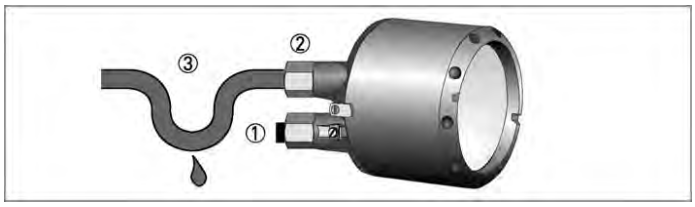

Figure 4-15: Laying the cable

① Use blanking plugs if no cable is routed through
② Tighten cable feedthrough firmly
③ Lay the cable in a loop

5 ORDER FORM

You can help us to assist you the best possible way by giving us the following information:

Device data

Connection type:					
Nominal connection size:					
Pressure rating:					
Raised face:					
Material of pipeline:					
Display options:	_ K1:	1 limit			
	_ K2:	2 limits			
	_ ESK4:	4...20 mA / HART®			
	_ ESK4-T:	4...20 mA / HART® / LCD counter, pulse output			
	_ ESK4-FF:	Foundation Fieldbus			
	_ ESK4-PA:	Profibus PA			
	_ M40	Aluminium, two-layer powder coating (epoxy / polyester)			
	_ M40R	Stainless steel without coating			
Approvals:	_ None	_ ATEX / IECEx	_ FM / FMc	_ NEPSI	_ Others:

Rating data

Medium:			
Operating pressure:		_ Absolute pressure	_ Gauge pressure
Rated pressure:			
Operating temperature:			
Rated temperature:			
Density:		_ Standard density	_ Operating density
Viscosity:			
Flow range:			
Comments:			

Contact data

Company:	
Contact person:	
Telephone number:	
Fax number:	
E-mail:	

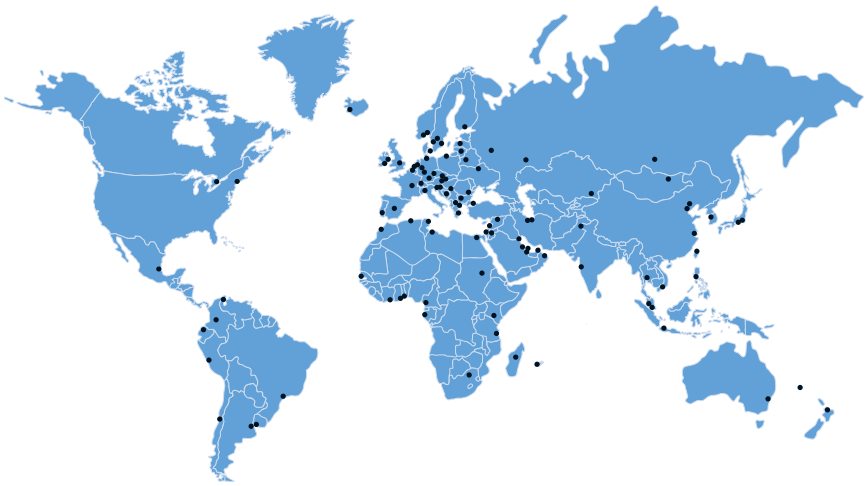

KROHNE – Process instrumentation and measurement solutions

- Flow
- Level
- Temperature
- Pressure
- Process Analysis
- Services

Head Office KROHNE Messtechnik GmbH
Ludwig-Krohne-Str. 5
47058 Duisburg (Germany)
Tel.: +49 203 301 0
Fax: +49 203 301 10389
info@krohne.com

The current list of all KROHNE contacts and addresses can be found at:
www.krohne.com

© KROHNE 10/2018 - 4000685605 - TD H250-M40 R05 en - Subject to change without notice.

A.14.3 Certificate

IECEx Certificate of Conformity

INTERNATIONAL ELECTROTECHNICAL COMMISSION
IEC Certification System for Explosive Atmospheres
for rules and details of the IECEx Scheme visit www.iecex.com

Certificate No.:	**IECEx PTB 11.0069X**	Page 1 of 5	Certificate history:
Status:	**Current**	Issue No: 2	Issue 1 (2019-09-17) Issue 0 (2011-08-03)
Date of Issue:	2021-01-11		
Applicant:	**KROHNE Messtechnik GmbH** Ludwig – Krohne Straße 5 47058 Duisburg **Germany**		
Equipment:	**Variable-area flowmeter, type H250.../M40...-Ex and the indicator unit, type M40...-Ex..**		
Optional accessory:			
Type of Protection:	**Intrinsic Safety or Increased Safety**		
Marking:	Ex ia IIC T6 ... T2 Gb or Ex ia IIIC T70°C ... T300°C Db or Ex ec IIC T6 ... T2 Gc		

Approved for issue on behalf of the IECEx Certification Body: **Dr.-Ing. F. Lienesch**

Position: **Head of Department "Explosion Protection in Sensor Technology and Instrumentation"**

Signature: (for printed version)

Date: 15.1.21

1. This certificate and schedule may only be reproduced in full.
2. This certificate is not transferable and remains the property of the issuing body.
3. The Status and authenticity of this certificate may be verified by visiting www.iecex.com or use of this QR Code.

Certificate issued by:

Physikalisch-Technische Bundesanstalt (PTB)
Bundesallee 100
38116 Braunschweig
Germany

Physikalisch-Technische Bundesanstalt Braunschweig und Berlin

IECEx Certificate of Conformity

Certificate No.: **IECEx PTB 11.0069X** Page 2 of 5

Date of issue: 2021-01-11 Issue No: 2

Manufacturer: **KROHNE Messtechnik GmbH**
Ludwig – Krohne Straße 5
47058 Duisburg
Germany

Additional manufacturing locations: **KROHNE Marshall Pvt Ltd**
A -34/35, MIDC Industrial Area
H Block, Pimpri
Pune 411 018
India

This certificate is issued as verification that a sample(s), representative of production, was assessed and tested and found to comply with the IEC Standard list below and that the manufacturer's quality system, relating to the Ex products covered by this certificate, was assessed and found to comply with the IECEx Quality system requirements.This certificate is granted subject to the conditions as set out in IECEx Scheme Rules, IECEx 02 and Operational Documents as amended

STANDARDS :
The equipment and any acceptable variations to it specified in the schedule of this certificate and the identified documents, was found to comply with the following standards

IEC 60079-0:2017 Explosive atmospheres - Part 0: Equipment - General requirements
Edition:7.0

IEC 60079-11:2011 Explosive atmospheres - Part 11: Equipment protection by intrinsic safety "i"
Edition:6.0

IEC 60079-7:2017 Explosive atmospheres - Part 7: Equipment protection by increased safety "e"
Edition:5.1

This Certificate **does not** indicate compliance with safety and performance requirements other than those expressly included in the Standards listed above.

TEST & ASSESSMENT REPORTS:
A sample(s) of the equipment listed has successfully met the examination and test requirements as recorded in:

Test Reports:

DE/PTB/ExTR19.0034/00 DE/PTB/ExTR19.0034/01

Quality Assessment Reports:

DE/PTB/QAR06.0002/05 GB/CML/QAR16.0006/03

IECEx Certificate of Conformity

Certificate No.: **IECEx PTB 11.0069X** Page 3 of 5

Date of issue: 2021-01-11 Issue No: 2

EQUIPMENT:
Equipment and systems covered by this Certificate are as follows:

The variable-area flowmeter, type H250.../M40...-Ex and the indicator unit, type M40...-Ex.. are used for the measurement of the volumetric flow of flammable and non-flammable gases and liquids. It consists of a measuring part of type series H250 and an indicator unit of type series M40. The M40 indicator unit accommodates the electronic assemblies. It consists of an enclosure with built-in module carrier and a mechanical indicator with measuring element. The indicator unit can be equipped with several electronic modules for signal analysis.

For further information as well as the thermal and electrical specifications, reference is made to the annex.

SPECIFIC CONDITIONS OF USE: YES as shown below:
For special conditions reference is made to the annex.

IECEx Certificate of Conformity

Certificate No.: **IECEx PTB 11.0069X** Page 4 of 5

Date of issue: 2021-01-11 Issue No: 2

DETAILS OF CERTIFICATE CHANGES (for issues 1 and above)
An alternative manufacturing site will be introduced.

Revision of the type labels and documentation regarding the additional manufacturing site.

IECEx Certificate of Conformity

Certificate No.:	**IECEx PTB 11.0069X**	Page 5 of 5
Date of issue:	2021-01-11	Issue No: 2

Additional information:
For special conditions as well as thermal and electrical specifications, reference is made to the annex.

Annex:

COCA110069X-02_1.pdf

Attachment to Certificate
IECEx PTB 11.0069X, Issue 2

Applicant:	Krohne Messtechnik GmbH
Electrical Apparatus:	Variable-area flowmeter, type H250.../M40...-Ex and indicator unit, type M40...-Ex

Description of equipment

The variable-area flowmeter, type H250.../M40...-Ex and the indicator unit, type M40...-Ex are used for the measurement of the volumetric flow of flammable and non-flammable gases and liquids. It consists of a measuring part of type series H250 and an indicator unit of type series M40. The measuring part can be operated in pipings running vertically or horizontally. The measurand is determined by a float reaching a specific position proportional to the volumetric flow. A follower magnet in the indicator unit converts this position into a rotation angle which is then transmitted to an indicator system.

The M40 indicator unit accommodates the electronic assemblies. It consists of an enclosure with built-in module carrier and a mechanical indicator with measuring element. The indicator unit can be equipped with several electronic modules for signal analysis.

Furthermore, a high temperature (HT) variant and different enclosure materials (aluminium / stainless steel) are available.

The signal circuits are designed either to type of protection Intrinsic Safety ia or ib, or to type of protection Increased Safety ec which enables the application as either category 2 - or category 3 - equipment.

Permissible range of the ambient temperature:	-40 (-25) °C up to +65 °C (depending on the design).
Permissible range of the medium temperature:	-40 °C up to +300 °C (depending on the design).
Permissible range of the temperature at the reference point:	-40 (-25) °C up to +90 °C (depending on the design).

For relationship between maximum permissible medium temperature, temperature class, maximum permissible ambient temperature and the design, reference is made to the tables given in the operating instructions manuals.

Physikalisch-Technische Bundesanstalt (PTB)
Bundesallee 100, 38116 Braunschweig, Germany
Postfach 33 45, 38023 Braunschweig, Germany
Telephone +49 531 592-0, Telefax +49 531 592-3605

Attachment to Certificate
IECEx PTB 11.0069X, Issue 2

Electrical data

Application as category 2-equipment, EPL Gb and Db

Indicator unit M40/ESK/...

with 4...20 mA signal output (HART) ESK4A terminals 11, 12 or HAN 7D connector pins 5, 6	type of protection Intrinsic Safety Ex ia IIC / IIIC or Ex ib IIC / IIIC Only for connection to certified intrinsically safe circuits. Maximum values: U_i = 30 V I_i = 130 mA P_i = 1 W L_i = 10 µH C_i negligibly low
optionally ESK4-T with ESK4-I/O module and display ESK4-I/O terminals 1, 2 or 4, 5 (NAMUR) ESK4-I/O terminals 1, 3 or 4, 6 (OC) or HAN 7D connector pins 1, 2 or 3, 4 ESK4-I/O terminals 7, 8 (input)	type of protection Intrinsic Safety Ex ia IIC / IIIC or Ex ib IIC / IIIC Only for connection to certified intrinsically safe circuits. Maximum values: U_i = 30 V I_i = 130 mA P_i = 1 W L_i negligibly low C_i = 10 nF
or	
with Profibus PA interface FISCO field device ESK4-PA terminals D, D-	type of protection Intrinsic Safety Ex ia IIC / IIIC or Ex ib IIC / IIIC Only for connection to certified intrinsically safe circuits. Maximum values: U_i = 24 V I_i = 380 mA P_i = 5.32 W L_i negligibly low C_i negligibly low or for connection to a bus circuit according to the FISCO-model

Physikalisch-Technische Bundesanstalt (PTB)
Bundesallee 100, 38116 Braunschweig, Germany
Postfach 33 45, 38023 Braunschweig, Germany
Telephone +49 531 592-0, Telefax +49 531 592-3605

Attachment to Certificate
IECEx PTB 11.0069X, Issue 2

or

with Foundation Fieldbus interface
FISCO field device
ESK4-FF terminals D, D-

type of protection Intrinsic Safety Ex ia IIC / IIIC
or Ex ib IIC / IIIC
Only for connection to certified intrinsically safe circuits.

Maximum values:

U_i = 24 V
I_i = 380 mA
P_i = 5.32 W
L_i negligibly low
C_i negligibly low

or for connection to a bus circuit according to the FISCO-model

Indicator unit M40/.../K.
with NAMUR limit switch
terminals 1, 2 or 4, 5
HAN 7D connector pins 1, 2 or 3, 4

type of protection Intrinsic Safety Ex ia IIC / IIIC
or Ex ib IIC / IIIC
Only for connection to certified intrinsically safe circuits.
The maximum values per circuit depend on the limit switches used as specified in the following table:

Limit switch, type	U_i [V]	I_i [mA]	P_i [mW]	L_i [µH]	C_i [nF]
SC3,5-N0-Y.... I7S23,5-N	16	25	64	150	150
	16	52	169	150	150
SJ3,5-SN SJ3,5-S1N	16	25	64	100	30
	16	52	169	100	30

Indicator unit M40/.../R.

with Reed switch
terminals 1, 3 or 4, 6 or
HAN 7D connector pins 1, 2 or 3, 4

type of protection Intrinsic Safety Ex ia IIC / IIIC
or Ex ib IIC / IIIC
Only for connection to certified intrinsically safe circuits.

Maximum values:

U_i = 30 V
I_i = 130 mA
P_i = 1 W
L_i negligibly low
C_i negligibly low

Physikalisch-Technische Bundesanstalt (PTB)
Bundesallee 100, 38116 Braunschweig, Germany
Postfach 33 45, 38023 Braunschweig, Germany
Telephone +49 531 592-0, Telefax +49 531 592-3605

Attachment to Certificate
IECEx PTB 11.0069X, Issue 2

Application as category 3-equipment, EPL Gc

Indicator unit M40/ESK/...

with 4...20 mA signal output (HART) ESK4A terminals 11, 12 or HAN 7D connector pins 5, 6	type of protection Increased Safety ec Nominal values: U = 14 – 30 V I = 4 – 20 mA
optionally ESK4-T with ESK4-I/O Modul and display	type of protection Increased Safety ec Nominal values:
ESK4-I/O terminals 1, 2 or 4, 5 (NAMUR)	U = 8 VDC I = 1 mA / 3 mA
ESK4-I/O terminals 1, 3 or 4, 6 (OC) or HAN 7D connector pins 1, 2 or 3, 4	U < 30 VDC I < 100 mA
ESK4-I/O terminals 7, 8 (input)	U < 30 VDC I < 2 mA
or	
with Profibus PA interface ESK4-PA terminals D, D-	U = 9 – 32 V I = 16 mA
or	
with Foundation Fieldbus interface ESK4-FF terminals D, D-	U = 9 – 32 V I = 16 mA
Indicator unit M40/.../K. with slot-type limit switch	type of protection Increased Safety ec Nominal values depend on type of limit switch
terminals 1, 2 or 4, 5 HAN 7D connector pins 1, 2 or 3, 4	U < 30 V I < 100 mA
Indicator unit M40/.../R. with Reed switch terminals 1, 3 or 4, 6 HAN 7D connector pins 1, 2 or 3, 4	type of protection Increased Safety ec Nominal values: U < 24 V I < 100 mA

Physikalisch-Technische Bundesanstalt (PTB)
Bundesallee 100, 38116 Braunschweig, Germany
Postfach 33 45, 38023 Braunschweig, Germany
Telephone +49 531 592-0, Telefax +49 531 592-3605

Attachment to Certificate
IECEx PTB 11.0069X, Issue 2

Special conditions for safe use

1. The connection facilities for the equipotential bonding conductor of the H250 measuring part or the M40 indicator unit shall be connected to the equipotential bonding system of the hazardous area.
2. When the material titanium is used for measuring parts the generation of sparks due to impact or friction between titanium and other materials shall be prevented (appropriately protected installation)
3. When the system is operated with flammable media the measuring parts shall be included in the recurring pressure test of the system.
4. The cable glands and blind plugs provided with the enclosure (or equivalent types) shall be used to ensure a sufficient degree of IP-protection and for sealing non-used openings.
5. To avoid the risk of electrostatic charge the variable-area flowmeter, type H250.../M40...-Ex and the indicator unit, type M40...-Ex shall not be used in areas where severely charge generating processes are to be assumed. The corresponding notes in the operating instructions manual shall be observed.
6. For permissible ambient and medium temperatures reference is made to the tables given in the operating instructions manual. All further specifications and notes shall be considered correspondingly.

Physikalisch-Technische Bundesanstalt (PTB)
Bundesallee 100, 38116 Braunschweig, Germany
Postfach 33 45, 38023 Braunschweig, Germany
Telephone +49 531 592-0, Telefax +49 531 592-3605

A.14.4 Declaration of Conformity

KROHNE

CE

EU DECLARATION OF CONFORMITY
EU-KONFORMITÄTSERKLÄRUNG **DÉCLARATION UE DE CONFORMITÉ**

KROHNE Messtechnik GmbH, Ludwig-Krohne-Str. 5, D-47058 Duisburg, Germany

We declare herewith under our sole responsibility that the following products are in compliance with the protection requirements defined in the European Council directives:
Wir erklären hiermit unter alleiniger Verantwortung, dass folgende Produkte konform sind mit den Schutzzielen der Richtlinien des Europäischen Parlaments:
Nous déclarons sous notre entière responsabilité que les produits suivants sont conformes aux exigences de protection des directives du parlement européen:

Variable area flowmeter Schwebekörper-Durchflussmessgerät Débitmètre à section variable	**H250. /.. / M40. /..**	

The stipulated safety and public health safety requirements are fulfilled in accordance with the harmonized standards or mentioned technical specifications (as far as applicable):
Der geforderte Sicherheits- und Gesundheitsschutz wird erfüllt in Übereinstimmung mit den harmonisierten Standards oder den angeführten technischen Normen (sofern zutreffend):
Les mesures de protections santé/ sécurité requises sont réalisées en accord avec les normes harmonisées ou les spécifications techniques mentionnées (autant qu'applicable):

Directive / Richtlinie /Directive		harmonized standards / harmonisierte Normen / normes harmonisées	
2014/30/EU	**Electromagnetic compatibility Elektromagnetische Verträglichkeit Compatibilité électromagnétique**	**EN 61326-2-3:2013 EN 61326-2-5:2013**	
2014/34/EU	**ATEX Directive ATEX Richtlinie Directive ATEX**	**EN IEC 60079-0:2018 EN 60079-1:2014 EN IEC 60079-7:2015 + A1:2018 EN 60079-11:2012 EN 60079-15:2010 EN 60079-31:2014**	**EN ISO 80079-36:2016 EN ISO 80079-37:2016**
2014/68/EU	**Pressure Equipment Directive Druckgeräterichtlinie Directive équipments sous pression**	**EN 16668:2018 EN 13445-3:2018**	**EN ISO 9606-1:2017 EN ISO 3834-2:2006 EN ISO 15614-1:2020**
2011/65/EU (EU) 2015/863	**RoHS**	**EN IEC 63000:2018**	

KROHNE Messtechnik GmbH, Ludwig-Krohne-Str. 5, 47058 Duisburg, Germany, Tel.: +49 (0)203 301 0, Fax: +49 (0)203 301 10 389, www.krohne.com
Sitz der Gesellschaft: Duisburg HRB 6348
Geschäftsführer: Dr. Michael Deilmann, Lars Lemke, Ingo Wald

KROHNE

According to the applicable directives, the equipment name plates contain the following information:
Die Kennzeichnung des Gerätes enthält entsprechend den zutreffenden Richtlinien folgende Angaben:
La plaque signalétique de l'équipement contient, selon les directives applicables, les informations suivantes:

Directive Richtlinie Directive	Conformity Assessment/ Certificate/ Notified Body Konformitätsbewertung/ Zertifikat/ Benannte Stelle Evaluation de la conformité/ Certificat/ Organisme Notifié		Category Kategorie Catégorie	Notified Body of QA system Benannte Stelle für QM System Org. Notifié du système qualité	CE marking CE Kennzeichnung Marquage CE
2014/30/EU	**Module A**	n.a.		n.a.	CE
2014/34/EU	**Module A+ Ex h IIC T6...T2 Gb Ex h IIIC T300°C Db**	**PTB 03 ATEX D127 X**	**II2G, II2D**	n.a.	CE
	Module B+D Ex ia IIC T6...T2 Gb	**PTB 11 ATEX 2012 X** Physikalisch-Technische Bundesanstalt Bundesallee 100 38116 Braunschweig Germany	**II2G**	Physikalisch-Technische Bundesanstalt Bundesallee 100 38116 Braunschweig Germany	CE 0102
	Module B+D Ex ia IIIC T70°C... T300°C Db	**PTB 11 ATEX 2012 X** Physikalisch-Technische Bundesanstalt Bundesallee 100 38116 Braunschweig Germany	**II2D**	Physikalisch-Technische Bundesanstalt Bundesallee 100 38116 Braunschweig Germany	CE 0102
	Module B+D Ex db IIC T6...T1 Gb	**PTB 12 ATEX 1025** Physikalisch-Technische Bundesanstalt Bundesallee 100 38116 Braunschweig Germany	**II2G**	Physikalisch-Technische Bundesanstalt Bundesallee 100 38116 Braunschweig Germany	CE 0102
	Module B+D Ex tb IIIC T70°C... T300°C Db	**PTB 12 ATEX 1025** Physikalisch-Technische Bundesanstalt Bundesallee 100 38116 Braunschweig Germany	**II2D**	Physikalisch-Technische Bundesanstalt Bundesallee 100 38116 Braunschweig Germany	CE 0102
	Module A(+B) Ex nA IIC T6...T2 Gc	**PTB 11 ATEX 2012 X** Physikalisch-Technische Bundesanstalt Bundesallee 100 38116 Braunschweig Germany	**II3G**	n.a.	CE
	Module A(+B) Ex ec IIC T6...T2 Gc	**PTB 11 ATEX 2012 X** Physikalisch-Technische Bundesanstalt Bundesallee 100 38116 Braunschweig Germany	**II3G**	n.a.	CE
2014/68/EU	**Module H**	n.a.	**II, III**	TÜV Rheinland Industrie Service Am Grauen Stein 51105 Köln Germany	CE 0035
	Module A	n.a.	**I**	n.a.	CE
	Art. 4.3 SEP	n.a.	**Art. 4.3**	n.a.	n.a.
2011/65/EU (EU) 2015/863	**Module A**	n.a.		n.a.	CE

Duisburg, 11/06/2021

Dr. Michael Deilmann
Managing Director

KROHNE Messtechnik GmbH, Ludwig-Krohne-Str. 5, 47058 Duisburg, Germany, Tel.: +49 (0)203 301 0, Fax: +49 (0)203 301 10 389, www.krohne.com
Sitz der Gesellschaft: Duisburg HRB 6348
Geschäftsführer: Dr. Michael Deilmann, Lars Lemke, Ingo Wald

KROHNE

DECLARACION UE DE CONFORMIDAD
DECLARAÇÃO UE DE CONFORMIDADE DICHIARAZIONE DI CONFORMITÀ UE

KROHNE Messtechnik GmbH, Ludwig-Krohne-Str. 5, D-47058 Duisburg, Germany

Declaramos bajo nuestra propia responsabilidad que los siguientes productos están en conformidad con los requerimientos de protección definidos en las directivas del Consejo Europeo:
Declaramos sob a nossa responsabilidade que os seguintes produtos estão em conformidade com os requisitos de protecção definidas pelas directivas do Conselho Europeu:
Si dichiara, sotto la nostra totale responsabilità che il prodotto/i prodotti, sono conformi ai requisiti di protezione definiti dalle direttive del parlamento Europeo:

Caudalímetros de área variable Caudalímetros de corpo flutuante Misuratori di portata ad area variabile	**H250. /.. / M40. /..**	

Los requerimientos de seguridad y salud pública estipulados se cumplen de acuerdo a los estándares armonizados o en las especificaciones técnicas mencionadas (en la medida de su aplicación)
Os requesitos de segurança e saúde pública estipulados são cumpridos de acordo com os standards armonizados ou mencionados nas especificações técnicas (sempre que aplicável) :
Sí adempie ai requisiti di sicurezza e salute pubblica in accordo alle norme armonizzate o alle specifiche tecniche menzionate (se applicabili) :

Directiva / Directiva / Direttiva		Estándares armonizados / Normas harmonizadas / Norme armonizzate	
2014/30/EU	**Compatibilidad electromagnética Compatibilidade eletromagnética Compatibilità elettromagnetica**	**EN 61326-2-3:2013 EN 61326-2-5:2013**	
2014/34/EU	**Directiva ATEX Directiva ATEX Direttiva ATEX**	**EN IEC 60079-0:2018 EN 60079-1:2014 EN IEC 60079-7:2015 + A1:2018 EN 60079-11:2012 EN 60079-15:2010 EN 60079-31:2014**	**EN ISO 80079-36:2016 EN ISO 80079-37:2016**
2014/68/EU	**Directiva Equipos a Presión Directiva Equipamentos sob pressão Direttiva per recipienti in pressione**	**EN 16668:2018 EN 13445-3:2018**	**EN ISO 9606-1:2017 EN ISO 3834-2:2006 EN ISO 15614-1:2020**
2011/65/EU (EU) 2015/863	**RoHS**	**EN IEC 63000:2018**	

KROHNE Messtechnik GmbH, Ludwig-Krohne-Str. 5, 47058 Duisburg, Germany, Tel.: +49 (0)203 301 0, Fax: +49 (0)203 301 10 389, www.krohne.com
Sitz der Gesellschaft: Duisburg HRB 6348
Geschäftsführer: Dr. Michael Dellmann, Lars Lemke, Ingo Wald

KROHNE

De acuerdo a las directivas aplicables, las placas de características del equipo contienen la siguiente información:
De acordo com as directivas aplicáveis, a placas característica do equipamento contem a seguinte informação:
La targhetta identificativa dello strumento contiene le seguenti informazioni in accordo alle normative:

Directiva Directiva Direttiva	Evaluación de Conformidad / Certificado / Organismo Notificado Avaliação conformidade / Certificado / Organismo Notificado Valutazione di conformitá / certificato / ente certificante		Categoría Categoria Categoria	Organismo Notificado del Sistema de Calidad Organismo Notificado do Sistema Qualidade Ente certificante per il sistema di qualitá	Marcado CE Marcação CE Marcatura CE
2014/30/EU	**Module A**	n.a.		n.a.	CE
2014/34/EU	**Module A+** **Ex h IIC T6…T2 Gb** **Ex h IIIC T300°C Db**	**PTB 03 ATEX D127 X**	**II2G, II2D**	n.a.	CE
	Module B+D **Ex ia IIC T6…T2 Gb**	**PTB 11 ATEX 2012 X** Physikalisch-Technische Bundesanstalt Bundesallee 100 38116 Braunschweig Germany	**II2G**	Physikalisch-Technische Bundesanstalt Bundesallee 100 38116 Braunschweig Germany	CE0102
	Module B+D **Ex ia IIIC T70°C…T300°C Db**	**PTB 11 ATEX 2012 X** Physikalisch-Technische Bundesanstalt Bundesallee 100 38116 Braunschweig Germany	**II2D**	Physikalisch-Technische Bundesanstalt Bundesallee 100 38116 Braunschweig Germany	CE0102
	Module B+D **Ex db IIC T6…T1 Gb**	**PTB 12 ATEX 1025** Physikalisch-Technische Bundesanstalt Bundesallee 100 38116 Braunschweig Germany	**II2G**	Physikalisch-Technische Bundesanstalt Bundesallee 100 38116 Braunschweig Germany	CE0102
	Module B+D **Ex tb IIIC T70°C…T300°C Db**	**PTB 12 ATEX 1025** Physikalisch-Technische Bundesanstalt Bundesallee 100 38116 Braunschweig Germany	**II2D**	Physikalisch-Technische Bundesanstalt Bundesallee 100 38116 Braunschweig Germany	CE0102
	Module A(+B) **Ex nA IIC T6…T2 Gc**	**PTB 11 ATEX 2012 X** Physikalisch-Technische Bundesanstalt Bundesallee 100 38116 Braunschweig Germany	**II3G**	n.a.	CE
	Module A(+B) **Ex ec IIC T6…T2 Gc**	**PTB 11 ATEX 2012 X** Physikalisch-Technische Bundesanstalt Bundesallee 100 38116 Braunschweig Germany	**II3G**	n.a.	CE
2014/68/EU	**Module H**	n.a.	**II, III**	TÜV Rheinland Industrie Service Am Grauen Stein 51105 Köln Germany	CE0035
	Module A	n.a.	**I**	n.a.	CE
	Art. 4.3 SEP	n.a.	**Art. 4.3**	n.a.	n.a.
2011/65/EU **(EU) 2015/863**	**Module A**	n.a.		n.a.	CE

Duisburg, 11/06/2021

Dr. Michael Deilmann
Managing Director

KROHNE Messtechnik GmbH, Ludwig-Krohne-Str. 5, 47058 Duisburg, Germany, Tel.: +49 (0)203 301 0, Fax: +49 (0)203 301 10 389, www.krohne.com
Sitz der Gesellschaft: Duisburg HRB 6348
Geschäftsführer: Dr. Michael Deilmann, Lars Lemke, Ingo Wald

KROHNE

CE

EU-CONFORMITEITSVERKLARING
DEKLARACJA ZGODNOŚCI UE DEKLARACJA ZGODNOŚCI UE

KROHNE Messtechnik GmbH, Ludwig-Krohne-Str. 5, D-47058 Duisburg, Germany

Hierbij verklaren we onder onze verantwoordelijkheid dat de volgende producten in overeenstemming zijn met de beveiligingseisen zoals gedefinieerd in de richtlijnen van het Europees Parlement:
Niniejszym oświadczamy na naszą wyłączną odpowiedzialność, że następujące produkty są zgodne z wymogami ochronnymi zdefiniowanymi w dyrektywach Rady Europejskiej:
Prohlašujeme na vlastní odpovědnost, že následující výrobky splňují požadavky směrnic Evropského parlamentu a rady:

Vlottermeters Przepływomierze rotametryczne plováčkové průtokoměry	**H250. /.. / M40. /..**	

Aan de vereiste veiligheids- en gezondheidseisen is voldaan in overeenstemming met de geharmoniseerde normen of de technische specificaties (indien van toepassing):
Przewidziane wymogi bezpieczeństwa oraz bezpieczeństwa zdrowia publicznego spełnione są zgodnie z normami zharmonizowanymi lub wzmiankowanymi specyfikacjami technicznymi (o ile ma to zastosowanie):
Stanovené požadavky na bezpečnost a ochranu zdraví jsou splněny v souladu s harmonizovanými normami nebo uvedenými technickými specifikacemi (pokud se na daný výrobek vztahují):

Richtlijn / Dyrektywa / Směrnice		geharmoniseerde normen / normy zharmonizowane / harmonizované normy	
2014/30/EU	**EMC richtlijn Dyrektywa EMC Směrnice EMC**	**EN 61326-2-3:2013 EN 61326-2-5:2013**	
2014/34/EU	**ATEX richtlijn Dyrektywa ATEX Směrnice ATEX**	**EN IEC 60079-0:2018 EN 60079-1:2014 EN IEC 60079-7:2015 + A1:2018 EN 60079-11:2012 EN 60079-15:2010 EN 60079-31:2014**	**EN ISO 80079-36:2016 EN ISO 80079-37:2016**
2014/68/EU	**Richtlijn druksystemen Dyrektywa ciśnieniowa Směrnice pro tlaková zařízení**	**EN 16668:2018 EN 13445-3:2018**	**EN ISO 9606-1:2017 EN ISO 3834-2:2006 EN ISO 15614-1:2020**
2011/65/EU (EU) 2015/863	**RoHS**	**EN IEC 63000:2018**	

KROHNE Messtechnik GmbH, Ludwig-Krohne-Str. 5, 47058 Duisburg, Germany, Tel.: +49 (0)203 301 0, Fax: +49 (0)203 301 10 389, www.krohne.com
Sitz der Gesellschaft: Duisburg HRB 6348
Geschäftsführer: Dr. Michael Deilmann, Lars Lemke, Ingo Wald

KROHNE

De typeplaten van de apparatuur bevatten volgens deze richtlijnen de volgende informatie:
Ze względu na powyższe dyrektywy tabliczki typu urządzeń zawierają następujące informacje:
Identifikační štítky přístrojů obsahují na základě směrnic následující údaje:

Richtlijn Dyrektywa Směrnice	Bevestiging assessment / Certifikaat / Notified body Ocena zgodności / Certyfikat / Jednostka notyfikowana Posouzení shody / Certifikát / Notifikovaná osoba		Categorie Kategoria Kategorie	Notified body van QA systeem Jednostka notyfikowana dla systemu zapewnienia jakości Notif. osoba pro syst. zajišť. jakosti	CE markering Oznaczenie CE Značka CE
2014/30/EU	**Module A**	n.a.		n.a.	CE
2014/34/EU	**Module A+** **Ex h IIC T6...T2 Gb** **Ex h IIIC T300°C Db**	**PTB 03 ATEX D127 X**	**II2G, II2D**	n.a.	CE
	Module B+D **Ex ia IIC T6...T2 Gb**	**PTB 11 ATEX 2012 X** Physikalisch-Technische Bundesanstalt Bundesallee 100 38116 Braunschweig Germany	**II2G**	Physikalisch-Technische Bundesanstalt Bundesallee 100 38116 Braunschweig Germany	CE0102
	Module B+D **Ex ia IIIC T70°C...** **T300°C Db**	**PTB 11 ATEX 2012 X** Physikalisch-Technische Bundesanstalt Bundesallee 100 38116 Braunschweig Germany	**II2D**	Physikalisch-Technische Bundesanstalt Bundesallee 100 38116 Braunschweig Germany	CE0102
	Module B+D **Ex db IIC T6...T1 Gb**	**PTB 12 ATEX 1025** Physikalisch-Technische Bundesanstalt Bundesallee 100 38116 Braunschweig Germany	**II2G**	Physikalisch-Technische Bundesanstalt Bundesallee 100 38116 Braunschweig Germany	CE0102
	Module B+D **Ex tb IIIC T70°C...** **T300°C Db**	**PTB 12 ATEX 1025** Physikalisch-Technische Bundesanstalt Bundesallee 100 38116 Braunschweig Germany	**II2D**	Physikalisch-Technische Bundesanstalt Bundesallee 100 38116 Braunschweig Germany	CE0102
	Module A(+B) **Ex nA IIC T6...T2 Gc**	**PTB 11 ATEX 2012 X** Physikalisch-Technische Bundesanstalt Bundesallee 100 38116 Braunschweig Germany	**II3G**	n.a.	CE
	Module A(+B) **Ex ec IIC T6...T2 Gc**	**PTB 11 ATEX 2012 X** Physikalisch-Technische Bundesanstalt Bundesallee 100 38116 Braunschweig Germany	**II3G**	n.a.	CE
2014/68/EU	**Module H**	n.a.	**II, III**	TÜV Rheinland Industrie Service Am Grauen Stein 51105 Köln Germany	CE0035
	Module A	n.a.	**I**	n.a.	CE
	Art. 4.3 SEP	n.a.	**Art. 4.3**	n.a.	n.a.
2011/65/EU **(EU) 2015/863**	**Module A**	n.a.		n.a.	CE

Duisburg, 11/06/2021

Dr. Michael Deilmann
Managing Director

KROHNE Messtechnik GmbH, Ludwig-Krohne-Str. 5, 47058 Duisburg, Germany, Tel.: +49 (0)203 301 0, Fax: +49 (0)203 301 10 389, www.krohne.com
Sitz der Gesellschaft: Duisburg HRB 6348
Geschäftsführer: Dr. Michael Deilmann, Lars Lemke, Ingo Wald

Physikalisch-Technische Bundesanstalt
Braunschweig und Berlin
Nationales Metrologieinstitut

(1) **EU-TYPE EXAMINATION CERTIFICATE**
(Translation)

(2) Equipment or Protective Systems Intended for Use in Potentially Explosive Atmospheres - **Directive 2014/34/EU**

(3) EU-Type Examination Certificate Number:

PTB 11 ATEX 2012 X **Issue: 1**

(4) Product: Variable-area flowmeter, type H250.../M40...-Ex and indicator unit, type M40...-Ex

(5) Manufacturer: Krohne Messtechnik GmbH

(6) Address: Ludwig-Krohne-Straße 5, 47058 Duisburg, Germany

(7) This product and any acceptable variation thereto is specified in the schedule to this certificate and the documents therein referred to.

(8) The Physikalisch-Technische Bundesanstalt, notified body No. 0102 in accordance with Article 17 of the Directive 2014/34/EU of the European Parliament and of the Council, dated 26 February 2014, certifies that this product has been found to comply with the Essential Health and Safety Requirements relating to the design and construction of products intended for use in potentially explosive atmospheres, given in Annex II to the Directive.

The examination and test results are recorded in the confidential Test Report PTB Ex 19-29093.

(9) Compliance with the Essential Health and Safety Requirements has been assured by compliance with:
EN IEC 60079-0:2018 **EN IEC 60079-7:2015 + A1:2018** **EN 60079-11:2012**

(10) If the sign "X" is placed after the certificate number, it indicates that the product is subject to the Specific Conditions of Use specified in the schedule to this certificate.

(11) This EU-Type Examination Certificate relates only to the design and construction of the specified product in accordance to the Directive 2014/34/EU. Further requirements of the Directive apply to the manufacturing process and supply of this product. These are not covered by this certificate.

(12) The marking of the product shall include the following:

II 2 G Ex ia IIC T6 ... T2 Gb **or** **II 3 G Ex ec IIC T6 ... T2 Gc** **or**
II 2 D Ex ia IIIC T70°C ... T300°C Db

ZSEx001e c

Konformitätsbewertungsstelle, Sektor Explosionsschutz Braunschweig, September 19, 2019
On behalf of PTB:

Dr.-Ing. F. Lienesch
Direktor und Professor

sheet 1/7

EU-Type Examination Certificates without signature and official stamp shall not be valid. The certificates may be circulated only without alteration. Extracts or alterations are subject to approval by the Physikalisch-Technische Bundesanstalt.
In case of dispute, the German text shall prevail.

Physikalisch-Technische Bundesanstalt • Bundesallee 100 • 38116 Braunschweig • GERMANY

Physikalisch-Technische Bundesanstalt
Braunschweig und Berlin
Nationales Metrologieinstitut

(13) **SCHEDULE**

(14) **EU-Type Examination Certificate Number PTB 11 ATEX 2012 X, Issue: 1**

(15) Description of Product

The variable-area flowmeter, type H250.../M40...-Ex and the indicator unit, type M40...-Ex.. are used for the measurement of the volumetric flow of flammable and non-flammable gases and liquids. It consists of a measuring part of type series H250 and an indicator unit of type series M40. The measuring part can be operated in pipings running vertically or horizontally. The measurand is determined by a float reaching a specific position proportional to the volumetric flow. A follower magnet in the indicator unit converts this position into a rotation angle which is then transmitted to an indicator system.

The M40 indicator unit accommodates the electronic assemblies. It consists of an enclosure with built-in module carrier and a mechanical indicator with measuring element. The indicator unit can be equipped with several electronic modules for signal analysis.

Furthermore, a high temperature (HT) variant and different enclosure materials (aluminium / stainless steel) are available.

The signal circuits are designed either to type of protection Intrinsic Safety ia or ib, or to type of protection Increased Safety ec which enables the application as either category 2- or category 3- equipment.

Permissible range of the ambient temperature:	-40 (-25) °C up to +65 °C (depending on the design).
Permissible range of the medium temperature:	-40 °C up to +300 °C (depending on the design).
Permissible range of the temperature at the reference point:	-40 (-25) °C up to +90 °C (depending on the design).

For relationship between maximum permissible medium temperature, temperature class, maximum permissible ambient temperature and the design, reference is made to the tables given in the operating instructions manuals.

The electrical data depend on the type of protection and the installed electronic modules as follows:

sheet 2/7

EU-Type Examination Certificates without signature and official stamp shall not be valid. The certificates may be circulated only without alteration. Extracts or alterations are subject to approval by the Physikalisch-Technische Bundesanstalt.
In case of dispute, the German text shall prevail.

Physikalisch-Technische Bundesanstalt • Bundesallee 100 • 38116 Braunschweig • GERMANY

Physikalisch-Technische Bundesanstalt
Braunschweig und Berlin
Nationales Metrologieinstitut

SCHEDULE TO EU-TYPE EXAMINATION CERTIFICATE PTB 11 ATEX 2012 X, Issue: 1

Electrical data

Application as category 2-equipment, EPL Gb and Db

Indicator unit M40/ESK/...

with 4...20 mA signal output (HART) ESK4A terminals 11, 12 or HAN 7D connector pins 5, 6	type of protection Intrinsic Safety Ex ia IIC or Ex ib IIC Only for connection to certified intrinsically safe circuits. Maximum values: U_i = 30 V I_i = 130 mA P_i = 1 W L_i = 10 µH C_i negligibly low
optionally ESK4-T with ESK4-I/O module and display ESK4-I/O terminals 1, 2 or 4, 5 (NAMUR) ESK4-I/O terminals 1, 3 or 4, 6 (OC) or HAN 7D connector pins 1, 2 or 3, 4 ESK4-I/O terminals 7, 8 (input)	type of protection Intrinsic Safety Ex ia IIC or Ex ib IIC Only for connection to certified intrinsically safe circuits. Maximum values: U_i = 30 V I_i = 130 mA P_i = 1 W L_i negligibly low C_i = 10 nF
or	
with Profibus PA interface FISCO field device ESK4-PA terminals D, D-	type of protection Intrinsic Safety Ex ia IIC or Ex ib IIC Only for connection to certified intrinsically safe circuits. Maximum values: U_i = 24 V I_i = 380 mA P_i = 5.32 W L_i negligibly low C_i negligibly low or for connection to a bus circuit according to the FISCO-model

sheet 3/7

EU-Type Examination Certificates without signature and official stamp shall not be valid. The certificates may be circulated only without alteration. Extracts or alterations are subject to approval by the Physikalisch-Technische Bundesanstalt.
In case of dispute, the German text shall prevail.

Physikalisch-Technische Bundesanstalt • Bundesallee 100 • 38116 Braunschweig • GERMANY

Physikalisch-Technische Bundesanstalt
Braunschweig und Berlin
Nationales Metrologieinstitut

SCHEDULE TO EU-TYPE EXAMINATION CERTIFICATE PTB 11 ATEX 2012 X, Issue: 1

or

with Foundation Fieldbus interface
FISCO field device
ESK4-FF terminals D, D-

type of protection Intrinsic Safety Ex ia IIC
or Ex ib IIC
Only for connection to certified intrinsically safe circuits.

Maximum values:

U_i = 24 V
I_i = 380 mA
P_i = 5.32 W
L_i negligibly low
C_i negligibly low

or for connection to a bus circuit according to the FISCO-model

Indicator unit M40/.../K.
with NAMUR limit switch
terminals 1, 2 or 4, 5
HAN 7D connector pins 1, 2 or 3, 4

type of protection Intrinsic Safety Ex ia IIC
or Ex ib IIC
Only for connection to certified intrinsically safe circuits.

The maximum values per circuit depend on the limit switches used as specified in the following table:

Limit switch, type	U_i [V]	I_i [mA]	P_i [mW]	L_i [µH]	C_i [nF]
SC3,5-N0-Y....	16	25	64	150	150
I7S23,5-N	16	52	169	150	150
SJ3,5-SN	16	25	64	100	30
SJ3,5-S1N	16	52	169	100	30

Indicator unit M40/.../R.

with Reed switch
terminals 1, 3 or 4, 6 or
HAN 7D connector pins 1, 2 or 3, 4

type of protection Intrinsic Safety Ex ia IIC
or Ex ib IIC
Only for connection to certified intrinsically safe circuits.

Maximum values:

U_i = 30 V
I_i = 130 mA
P_i = 1 W
L_i negligibly low
C_i negligibly low

sheet 4/7

EU-Type Examination Certificates without signature and official stamp shall not be valid. The certificates may be circulated only without alteration. Extracts or alterations are subject to approval by the Physikalisch-Technische Bundesanstalt.
In case of dispute, the German text shall prevail.

Physikalisch-Technische Bundesanstalt • Bundesallee 100 • 38116 Braunschweig • GERMANY

Physikalisch-Technische Bundesanstalt
Braunschweig und Berlin
Nationales Metrologieinstitut

SCHEDULE TO EU-TYPE EXAMINATION CERTIFICATE PTB 11 ATEX 2012 X, Issue: 1

Application as category 3-equipment, EPL Gc

Indicator unit M40/ESK/...

with 4...20 mA signal output (HART) ESK4A terminals 11, 12 or HAN 7D connector pins 5, 6	type of protection Increased Safety ec Nominal values: U = 14 – 30 V I = 4 – 20 mA
optionally ESK4-T with ESK4-I/O Modul and display	type of protection Increased Safety ec Nominal values:
ESK4-I/O terminals 1, 2 or 4, 5 (NAMUR)	U = 8 VDC I = 1 mA / 3 mA
ESK4-I/O terminals 1, 3 or 4, 6 (OC) or HAN 7D connector pins 1, 2 or 3, 4	U < 30 VDC I < 100 mA
ESK4-I/O terminals 7, 8 (input)	U < 30 VDC I < 2 mA
or	
with Profibus PA interface ESK4-PA terminals D, D-	U = 9 – 32 V I = 16 mA
or	
with Foundation Fieldbus interface ESK4-FF terminals D, D-	U = 9 – 32 V I = 16 mA
Indicator unit M40/.../K. with slot-type limit switch terminals 1, 2 or 4, 5 HAN 7D connector pins 1, 2 or 3, 4	type of protection Increased Safety ec Nominal values depend on type of limit switch U < 30 V I < 100 mA
Indicator unit M40/.../R. with Reed switch terminals 1, 3 or 4, 6 HAN 7D connector pins 1, 2 or 3, 4	type of protection Increased Safety ec Nominal values: U < 24 V I < 100 mA

sheet 5/7

EU-Type Examination Certificates without signature and official stamp shall not be valid. The certificates may be circulated only without alteration. Extracts or alterations are subject to approval by the Physikalisch-Technische Bundesanstalt.
In case of dispute, the German text shall prevail.

Physikalisch-Technische Bundesanstalt • Bundesallee 100 • 38116 Braunschweig • GERMANY

Physikalisch-Technische Bundesanstalt
Braunschweig und Berlin
Nationales Metrologieinstitut

SCHEDULE TO EU-TYPE EXAMINATION CERTIFICATE PTB 11 ATEX 2012 X, Issue: 1

Changes with respect to previous editions

- In the future type of protection "non-sparking device Ex nA" will be omitted
- Type of protection Increased Safety Ex ec is introduced
- In the future the marking for group IIB will be omitted
- Revision of the marking for the application in hazardous areas due to combustible dusts
- Revision of the terminal/connector designations in the electrical data
- Update of the „Special Conditions"
- Revision of the type labels and the documentation
- Adaption to the current state of standards
- Update of the operating instructions manual

(16) Test Report PTB Ex 19-29093

(17) Specific conditions of use

1. The connection facilities for the equipotential bonding conductor of the H250 measuring part or the M40 indicator unit shall be connected to the equipotential bonding system of the hazardous area.
2. When the material titanium is used for measuring parts the generation of sparks due to impact or friction between titanium and other materials shall be prevented (appropriately protected installation)
3. When the system is operated with flammable media the measuring parts shall be included in the recurring pressure test of the system.
4. The cable glands and blind plugs provided with the enclosure (or equivalent types) shall be used to ensure a sufficient degree of IP-protection and for sealing non-used openings.
5. To avoid the risk of electrostatic charge the variable-area flowmeter, type H250.../M40...-Ex and the indicator unit, type M40...-Ex shall not be used in areas where severely charge generating processes are to be assumed. The corresponding notes in the operating instructions manual shall be observed.
6. For permissible ambient and medium temperatures reference is made to the tables given in the operating instructions manual. All further specifications and notes shall be considered correspondingly.

sheet 6/7

EU-Type Examination Certificates without signature and official stamp shall not be valid. The certificates may be circulated only without alteration. Extracts or alterations are subject to approval by the Physikalisch-Technische Bundesanstalt.
In case of dispute, the German text shall prevail.

Physikalisch-Technische Bundesanstalt • Bundesallee 100 • 38116 Braunschweig • GERMANY

Physikalisch-Technische Bundesanstalt
Braunschweig und Berlin
Nationales Metrologieinstitut

SCHEDULE TO EU-TYPE EXAMINATION CERTIFICATE PTB 11 ATEX 2012 X, Issue: 1

(18) Essential health and safety requirements

Met by compliance with the aforementioned standards.

The standard EN IEC 60079-0:2018 is not yet listed as a harmonized European standard in the Official Journal of the EU. However, compliance with the essential safety and health requirements of Directive 2014/34/EU is guaranteed, since the standard provides at least the same safety level as its harmonized predecessor.

Konformitätsbewertungsstelle, Sektor Explosionsschutz Braunschweig, September 19, 2019
On behalf of PTB:

Dr.-Ing. F. Lienesch
Direktor und Professor

sheet 7/7

EU-Type Examination Certificates without signature and official stamp shall not be valid. The certificates may be circulated only without alteration. Extracts or alterations are subject to approval by the Physikalisch-Technische Bundesanstalt. In case of dispute, the German text shall prevail.

Physikalisch-Technische Bundesanstalt • Bundesallee 100 • 38116 Braunschweig • GERMANY

Physikalisch-Technische Bundesanstalt

Braunschweig und Berlin

(1) **EC-TYPE-EXAMINATION CERTIFICATE**

(Translation)

(2) Equipment and Protective Systems Intended for Use in Potentially Explosive Atmospheres - **Directive 94/9/EC**

(3) EC-type-examination Certificate Number:

PTB 11 ATEX 2012 X

(4)	Equipment:	Variable-area flowmeter, type H250…/../M40./../……./..-Ex-.. and indicator unit, type M40./../……./..-Ex-..
(5)	Manufacturer:	Krohne Messtechnik GmbH
(6)	Address:	Ludwig Krohne Straße 5, 47058 Duisburg, Germany

(7) This equipment and any acceptable variation thereto are specified in the schedule to this certificate and the documents therein referred to.

(8) The Physikalisch-Technische Bundesanstalt, notified body No. 0102 in accordance with Article 9 of the Council Directive 94/9/EC of 23 March 1994, certifies that this equipment has been found to comply with the Essential Health and Safety Requirements relating to the design and construction of equipment and protective systems intended for use in potentially explosive atmospheres, given in Annex II to the Directive.

The examination and test results are recorded in the confidential assessment and test report PTB Ex 11-21108.

(9) Compliance with the Essential Health and Safety Requirements has been assured by compliance with:

EN 60079-0:2009 **EN 60079-11:2007** **EN 60079-15:2010**

(10) If the sign "X" is placed after the certificate number, it indicates that the equipment is subject to special conditions for safe use specified in the schedule to this certificate.

(11) This EC-type-examination Certificate relates only to the design, examination and tests of the specified equipment in accordance to the Directive 94/9/EC. Further requirements of the Directive apply to the manufacturing process and supply of this equipment. These are not covered by this certificate.

(12) The marking of the equipment shall include the following:

Ex ia IIC T6 Gb or **Ex ia IIB T6 Gb** or **Ex nA IIC T6 Gc** or **Ex nA IIB T6 Gc**

U112012.dot

Zertifizierungssektor Explosionsschutz
On behalf of PTB:

Braunschweig, July 19, 2011

Dr.-Ing. U. Gerlach
Oberregierungsrat

PHYSIKALISCH-TECHNISCHE BUNDESANSTALT 56

sheet 1/6

EC-type-examination Certificates without signature and official stamp shall not be valid. The certificates may be circulated only without alteration. Extracts or alterations are subject to approval by the Physikalisch-Technische Bundesanstalt. In case of dispute, the German text shall prevail.

Physikalisch-Technische Bundesanstalt • Bundesallee 100 • 38116 Braunschweig • GERMANY

Physikalisch-Technische Bundesanstalt

Braunschweig und Berlin

(13) **S C H E D U L E**

(14) **EC-TYPE-EXAMINATION CERTIFICATE PTB 11 ATEX 2012 X**

(15) Description of equipment

The variable-area flowmeter, type H250..././M40./../...../..-Ex-.. and the indicator unit, type M40./../...../..-Ex-.. are used for the measurement of the volumetric flow of flammable and non-flammable gases and liquids. It consists of a measuring part of type series H250 and an indicator unit of type series M40. The measuring part can be operated in pipings running vertically or horizontally. The measurand is determined by a float reaching a specific position proportional to the volumetric flow. A follower magnet in the indicator unit converts this position into a rotation angle which is then transmitted to an indicator system.

The M40 indicator unit accommodates the electronic assemblies. It consists of an enclosure with built-in module carrier and a mechanical indicator with measuring element. The indicator unit can be equipped with several electronic modules for signal analysis.

Furthermore, a high temperature (HT) variant and different enclosure materials (aluminium / stainless steel) are available.

The signal circuits are designed either to type of protection Intrinsic Safety ia or ib, or to type of protection Non-sparking which enables the application as either category 2- or category 3-equipment.

Permissible range of the ambient temperature:	-40 (-25) °C up to +65 °C (depending on the design).
Permissible range of the medium temperature:	-40 °C up to +300 °C (depending on the design).
Permissible range of the temperature at the reference point:	-40 (-25) °C up to +90 °C (depending on the design).

For relationship between maximum permissible medium temperature, temperature class, maximum permissible ambient temperature and the design, reference is made to the tables given in the operating instructions manuals.

The electrical data depend on the type of protection and the installed electronic modules as follows:

EC-type-examination Certificates without signature and official stamp shall not be valid. The certificates may be circulated only without alteration. Extracts or alterations are subject to approval by the Physikalisch-Technische Bundesanstalt. In case of dispute, the German text shall prevail.

Physikalisch-Technische Bundesanstalt • Bundesallee 100 • 38116 Braunschweig • GERMANY

Physikalisch-Technische Bundesanstalt

Braunschweig und Berlin

SCHEDULE TO EC-TYPE-EXAMINATION CERTIFICATE PTB 11 ATEX 2012 X

Electrical data

Application as category 2-equipment, EPL Gb

Indicator unit M40 ESK4

with signal output ESK4...
(terminals 11, 12 / HAN pins 5, 6)

type of protection Intrinsic Safety Ex ia IIC
or Ex ib IIC
Only for connection to certified intrinsically safe circuits.

Maximum values:

U_i = 30 V
I_i = 130 mA
P_i = 1 W
L_i = 10 µH
C_i negligibly low

Indicator unit M40 ESK4-T

with signal output ESK4...
(terminals 11, 12 / HAN pins 5, 6)

type of protection Intrinsic Safety Ex ia IIC
or Ex ib IIC
Only for connection to certified intrinsically safe circuits.

Maximum values:

U_i = 30 V
I_i = 130 mA
P_i = 1 W
L_i = 10 µH
C_i negligibly low

and

Module I/O
(terminals 1, 2, 3 or 4, 5, 6 or 7, 8
HAN pins 1, 2 or 3, 4)

type of protection Intrinsic Safety Ex ia IIC
or Ex ib IIC
Only for connection to certified intrinsically safe circuits.

Maximum values per circuit:

U_i = 30 V
I_i = 130 mA
P_i = 1 W
L_i negligibly low
C_i = 10 nF

sheet 3/6

EC-type-examination Certificates without signature and official stamp shall not be valid. The certificates may be circulated only without alteration. Extracts or alterations are subject to approval by the Physikalisch-Technische Bundesanstalt.
In case of dispute, the German text shall prevail.

Physikalisch-Technische Bundesanstalt • Bundesallee 100 • 38116 Braunschweig • GERMANY

Physikalisch-Technische Bundesanstalt

Braunschweig und Berlin

SCHEDULE TO EC-TYPE-EXAMINATION CERTIFICATE PTB 11 ATEX 2012 X

Indicator unit M40 ESK4-FF / ESK4-PA
(terminals D, D⊥)

Only for connection to a certified intrinsically safe circuit

Maximum values:

U_i = 24 V
I_i = 380 mA
P_i = 5.32 W
L_i negligibly low
C_i negligibly low

or for connection to a bus circuit according to the FISCO-model

Indicator unit M40 K.
(terminals 1, 2 or 4, 5
HAN pins 1, 2 or 3, 4)

type of protection Intrinsic Safety Ex ia IIC
or Ex ib IIC
Only for connection to certified intrinsically safe circuits.

The maximum values per circuit depend on the slot-type initiators used as specified in the following table:

Slot-type initiators types	U_i [V]	I_i [mA]	P_i [mW]	L_i [µH]	C_i [nF]
SC3,5-N0-Y....	16	25	64	150	150
I7S23,5-N	16	52	169	150	150
SJ3,5-SN	16	25	64	30	100
SJ3,5-S1N	16	52	169	30	100

Application as category 3-equipment, EPL Gc

Indicator unit M40 ESK4

with signal output ESK4...
(terminals 11, 12)

type of protection Non-sparking nA

Nominal values per circuit:

U = 14 – 32 V, I = 4 – 20 mA

sheet 4/6

EC-type-examination Certificates without signature and official stamp shall not be valid. The certificates may be circulated only without alteration. Extracts or alterations are subject to approval by the Physikalisch-Technische Bundesanstalt.
In case of dispute, the German text shall prevail.

Physikalisch-Technische Bundesanstalt • Bundesallee 100 • 38116 Braunschweig • GERMANY

Physikalisch-Technische Bundesanstalt

Braunschweig und Berlin

SCHEDULE TO EC-TYPE-EXAMINATION CERTIFICATE PTB 11 ATEX 2012 X

Indicator unit M40 ESK4-T	
with signal output ESK4… (terminals 11, 12)	type of protection Non-sparking nA Nominal values per circuit: U = 14 – 32 V, I = 4 – 20 mA
and	
Module I/O (terminals 1, 3 (OC) or 4, 6 (OC) or 1, 2 (NAMUR) or 4, 5 (NAMUR) or 7, 8 (input))	type of protection Non-sparking nA Nominal values per circuit: U = 8 – 32 V, I = 1 mA – 100 mA U = 8 V, I ≤ 1 / ≥ 3 mA U = 8 – 32 V, I □ 2 mA
Indicator unit M40 ESK4-FF / ESK4-PA (terminals D, D⊥)	type of protection Non-sparking nA for connection to bus circuits Nominal values: U = 9 – 32 V, I = 16 mA
Indicator unit M40 K. (terminals 1, 2 or 4, 5)	type of protection Non-sparking nA Nominal values per circuit: U = 8 V, I ≤ 1 / ≥ 3 mA Slot-type initiator, type SJ3,5-SN SJ3,5-S1N SC3,5-N0-Y…. I7S23,5-N
Output signal	normalized current signal 4 – 20 mA with superimposed HART-communication signal in 2-wire connection U_N = 14 V – 32 V DC
Module-I/O	U_N = 12.7 V – 32 V DC I = 1 mA or 3 mA (depending on switch position) or open-collector-output
ESK4-FF, ESK4-PA	Manchester-coded current signal 10 ± 9 mA
Slot-type initiator	U_N = 8 V I = 1 mA or 3 mA (depending on switch position)

sheet 5/6

EC-type-examination Certificates without signature and official stamp shall not be valid. The certificates may be circulated only without alteration. Extracts or alterations are subject to approval by the Physikalisch-Technische Bundesanstalt.
In case of dispute, the German text shall prevail.

Physikalisch-Technische Bundesanstalt • Bundesallee 100 • 38116 Braunschweig • GERMANY

Physikalisch-Technische Bundesanstalt

Braunschweig und Berlin

SCHEDULE TO EC-TYPE-EXAMINATION CERTIFICATE PTB 11 ATEX 2012 X

(16) Assessment and test report PTB Ex 11-21108

(17) Special conditions for safe use

1. The connection facilities for the equipotential bonding conductor of the H250 measuring part or the M40 indicator unit shall be connected to the equipotential bonding system of the hazardous area.
2. When the material titanium is used for measuring parts the generation of sparks due to impact or friction between titanium and other materials shall be prevented (appropriately protected installation)
3. When the system is operated with flammable media the measuring parts shall be included in the recurring pressure test of the system.
4. The cable glands and blind plugs provided with the enclosure (or equivalent types) shall be used to ensure a sufficient degree of IP-protection and for sealing non-used openings.
5. The variable-area flowmeter, type H250..././M40./../...../..-Ex-.. and the indicator unit, type M40./../...../..-Ex-.. are provided with a viewing window which can be charged electro-statically during cleaning. A warning label on the equipment and a note in the operating instructions manual shall point to this risc.
6. For permissible ambient and medium temperatures reference is made to the tables given in the operating instructions manual. All further specifications and notes shall be considered correspondingly.

(18) Essential health and safety requirements

met by compliance with the standards mentioned above

Zertifizierungssektor Explosionsschutz
On behalf of PTB:

Dr.-Ing. U. Gerlach
Oberregierungsrat

Braunschweig, July 19, 2011

sheet 6/6

EC-type-examination Certificates without signature and official stamp shall not be valid. The certificates may be circulated only without alteration. Extracts or alterations are subject to approval by the Physikalisch-Technische Bundesanstalt.
In case of dispute, the German text shall prevail.

Physikalisch-Technische Bundesanstalt • Bundesallee 100 • 38116 Braunschweig • GERMANY

Physikalisch-Technische Bundesanstalt
Braunschweig und Berlin
Nationales Metrologieinstitut

1. SUPPLEMENT

according to Directive 94/9/EC Annex III.6

to EC-TYPE-EXAMINATION CERTIFICATE PTB 11 ATEX 2012 X

(Translation)

Equipment: Variable-area flowmeter, type H250.../../M40./../...../..-Ex-..
and indicator unit, type M40./../...../..-Ex-..

Marking: **II 2 G Ex ia IIC T6 Gb or II 2 G Ex ia IIB T6 Gb or**
II 3 G Ex nA IIC T6 Gc or II 3 G Ex nA IIB T6 Gc

Manufacturer: Krohne Messtechnik GmbH

Address: Ludwig Krohne Straße 5, 47058 Duisburg, Germany

Description of supplements and modifications

In the future the variable-area flowmeter, type H250.../../M40./../...../..-Ex-.. and the indicator unit, type M40./../...../..-Ex-.. may also be manufactured and operated according to the test documents listed in the test report. The modifications concern the adaption to the current state of the standards, the introduction of a new variant with reed switches, the extension and correction of the electrical data and the extension of the marking of the intrinsically safe variant regarding the temperature classes and for the future application in hazardous areas due to combustible dusts.
The built-in electronic assembly is no longer part of the documentation since it is separately certified (PTB 10 ATEX 2021 X).

The electrical data are corrected as follows:

Electrical data

Indicator unit M40 K.
(terminals 1, 2 or 4, 5
HAN pins 1, 2 or 3, 4)

type of protection Intrinsic Safety Ex ia IIC
or Ex ib IIC

Only for connection to certified intrinsically safe circuits.

The maximum values per circuit depend on the slot-type initiators used as specified in the following table:

Slot-type initiators types	U_i [V]	I_i [mA]	P_i [mW]	L_i [µH]	C_i [nF]
SC3,5-N0-Y....	16	25	64	150	150
I7S23,5-N	16	52	169	150	150
SJ3,5-SN	16	25	64	100	30
SJ3,5-S1N	16	52	169	100	30

ZSEx10101e b

Sheet 1/2

EC-type-examination Certificates without signature and official stamp shall not be valid. The certificates may be circulated only without alteration. Extracts or alterations are subject to approval by the Physikalisch-Technische Bundesanstalt.
In case of dispute, the German text shall prevail.

Physikalisch-Technische Bundesanstalt • Bundesallee 100 • 38116 Braunschweig • GERMANY

Physikalisch-Technische Bundesanstalt
Braunschweig und Berlin
Nationales Metrologieinstitut

1. SUPPLEMENT TO EC-TYPE-EXAMINATION CERTIFICATE PTB 11 ATEX 2012 X

The electrical data of the new variant read as follows:

Application as category-2 equipment, EPL Gb

Supply Reed switches (contact terminals "min" 1(+), 3(-) contact terminals "max" 4(+), 6(-))	type of protection Intrinsic Safety Ex ia IIC Only for connection to certified intrinsically safe circuits. Maximum values per circuit: U_i = 30 V I_i = 100 mA P_i = 1 W L_i negligibly low C_i negligibly low

The marking will read in future:

II 2 G Ex ia IIC T6...T2 Gb or II 2 G Ex ia IIB T6...T2 Gb or
II 3 G Ex nA IIC T6...T2 Gc or II 3 G Ex nA IIB T6...T2 Gc

For the application in hazardous areas due to combustible dusts the equipment shall be marked in future as follows:

II 2 D Ex ia IIIC T85 °C Db

The "Special conditions" as well as all further electrical data and specifications of the EC-type examination certificate apply without changes also to this 1st supplement.

Applied standards

EN 60079-0:2012 **EN 60079-11:2012** **EN 60079-15:2010**

Test report: PTB Ex 15-24150

Konformitätsbewertungsstelle, Sektor Explosionsschutz
On behalf of PTB

Braunschweig, February 9, 2014

Dr.-Ing. T. Horn
Regierungsrat

Sheet 2/2

EC-type-examination Certificates without signature and official stamp shall not be valid. The certificates may be circulated only without alteration. Extracts or alterations are subject to approval by the Physikalisch-Technische Bundesanstalt.
In case of dispute, the German text shall prevail.

Physikalisch-Technische Bundesanstalt • Bundesallee 100 • 38116 Braunschweig • GERMANY

A.14.5 EC type-examination certificate

Physikalisch-Technische Bundesanstalt
Braunschweig und Berlin
Nationales Metrologieinstitut

(1) **EU-Baumusterprüfbescheinigung**

(2) Geräte oder Schutzsysteme zur bestimmungsgemäßen Verwendung in explosionsgefährdeten Bereichen - **Richtlinie 2014/34/EU**

(3) EU-Baumusterprüfbescheinigungsnummer

PTB 11 ATEX 2012 X **Ausgabe: 1**

(4) Produkt: Schwebekörper-Durchfluss-Messgerät
Typ H250.../M40...-Ex und Anzeiger Typ M40...-Ex

(5) Hersteller: Krohne Messtechnik GmbH

(6) Anschrift: Ludwig-Krohne-Straße 5, 47058 Duisburg, Deutschland

(7) Die Bauart dieses Produkts sowie die verschiedenen zulässigen Ausführungen sind in der Anlage und den darin aufgeführten Unterlagen zu dieser Baumusterprüfbescheinigung festgelegt.

(8) Die Physikalisch-Technische Bundesanstalt, notifizierte Stelle Nr. 0102 gemäß Artikel 17 der Richtlinie 2014/34/EU des Europäischen Parlaments und des Rates vom 26. Februar 2014, bescheinigt, dass dieses Produkt die grundlegenden Sicherheits- und Gesundheitsanforderungen für die Konzeption und den Bau von Produkten zur bestimmungsgemäßen Verwendung in explosionsgefährdeten Bereichen gemäß Anhang II der Richtlinie erfüllt.

Die Ergebnisse der Prüfung sind in dem vertraulichen Prüfbericht PTB Ex 19-29093 festgehalten.

(9) Die grundlegenden Sicherheits- und Gesundheitsanforderungen werden erfüllt durch Übereinstimmung mit
EN IEC 60079-0:2018 **EN IEC 60079-7:2015 + A1:2018** **EN 60079-11:2012**

(10) Falls das Zeichen „X" hinter der Bescheinigungsnummer steht, wird auf besondere Bedingungen für die sichere Anwendung des Produkts in der Anlage zu dieser Bescheinigung hingewiesen.

(11) Diese EU-Baumusterprüfbescheinigung bezieht sich nur auf Konzeption und Prüfung des festgelegten Produkts gemäß Richtlinie 2014/34/EU. Weitere Anforderungen dieser Richtlinie gelten für die Herstellung und das Bereitstellen auf dem Markt. Diese Anforderungen werden nicht durch diese Bescheinigung abgedeckt.

(12) Die Kennzeichnung des Produkts muss die folgenden Angaben enthalten:

II 2 G Ex ia IIC T6 ... T2 Gb bzw. II 3 G Ex ec IIC T6 ... T2 Gc bzw.
II 2 D Ex ia IIIC T70°C ... T300°C Db

ZSEx10100d c

Konformitätsbewertungsstelle, Sektor Explosionsschutz Braunschweig, 19. September 2019
Im Auftrag

Dr.-Ing. F. Lienesch
Direktor und Professor

Seite 1/7

EU-Baumusterprüfbescheinigungen ohne Unterschrift und ohne Siegel haben keine Gültigkeit.
Diese EU-Baumusterprüfbescheinigung darf nur unverändert weiterverbreitet werden.
Auszüge oder Änderungen bedürfen der Genehmigung der Physikalisch-Technischen Bundesanstalt.

Physikalisch-Technische Bundesanstalt • Bundesallee 100 • 38116 Braunschweig • DEUTSCHLAND

Physikalisch-Technische Bundesanstalt
Braunschweig und Berlin
Nationales Metrologieinstitut

(13) **Anlage**

(14) **EU-Baumusterprüfbescheinigung PTB 11 ATEX 2012 X, Ausgabe: 1**

(15) Beschreibung des Produkts

Das Schwebekörper-Durchfluss-Messgerät Typ H250.../M40...-Ex und der Anzeiger Typ M40...-Ex dienen zur Messung des Volumenstromes brennbarer und nichtbrennbarer Gase und Flüssigkeiten. Es besteht aus einem Messteil der Baureihe H250 und einer Anzeige der Baureihe M40. Das Messteil kann in vertikal oder horizontal verlaufenden Rohrleitungen betrieben werden. Die Messgröße wird bestimmt, indem sich ein Schwebekörper proportional zum Volumenstrom auf eine bestimmte Position einstellt, welche von einem Folgemagneten im Anzeiger in einen Drehwinkel umgeformt und auf ein Zeigersystem übertragen wird.

Die Anzeige M40 beherbergt die elektronischen Baugruppen und besteht aus einem Gehäuse mit eingebautem Modulträger und einer mechanischen Anzeige mit Messwerk. Die Anzeige kann mit verschiedenen Elektronikmodulen zur Signalauswertung bestückt werden.

Desweiteren stehen eine Hochtemperatur (HT)- Variante und unterschiedliche Gehäusematerialien (Aluminium / Edelstahl) zur Verfügung.

Die Signalstromkreise sind entweder in Zündschutzart Eigensicherheit ia bzw. ib oder in Zündschutzart Erhöhte Sicherheit ec, was entweder den Einsatz als Kategorie 2- oder Kategorie 3 - Betriebsmittel ermöglicht.

Zulässiger Bereich der Umgebungstemperatur:	-40 (-25) °C bis +65 °C (abhängig von der Geräteausführung).
Zulässiger Bereich der Mediumtemperatur:	-40 °C bis +300 °C (abhängig von der Geräteausführung).
Zulässiger Bereich der Referenzpunkttemperatur:	-40 (-25) °C bis +90 °C (abhängig von der Geräteausführung).

Der Zusammenhang zwischen der höchstzulässigen Mediumtemperatur, der Temperaturklasse, der höchstzulässigen Umgebungstemperatur und der Geräteausführung ist den Tabellen der Betriebsanleitungen zu entnehmen.

Die elektrischen Daten sind wie folgt abhängig von der Zündschutzart und den eingebauten Elektronikmodulen:

EU-Baumusterprüfbescheinigungen ohne Unterschrift und ohne Siegel haben keine Gültigkeit.
Diese EU-Baumusterprüfbescheinigung darf nur unverändert weiterverbreitet werden.
Auszüge oder Änderungen bedürfen der Genehmigung der Physikalisch-Technischen Bundesanstalt.

Physikalisch-Technische Bundesanstalt • Bundesallee 100 • 38116 Braunschweig • DEUTSCHLAND

Physikalisch-Technische Bundesanstalt
Braunschweig und Berlin
Nationales Metrologieinstitut

Anlage zur EU-Baumusterprüfbescheinigung PTB 11 ATEX 2012 X, Ausgabe: 1

Elektrische Daten

Einsatz als Kategorie 2-Betriebsmittel, EPL Gb und Db

Anzeigeeinheit M40/ESK/...

mit 4...20 mA Signalausgang (HART) ESK4A Klemmen 11, 12 bzw. HAN 7D Anschlusspins 5, 6	in Zündschutzart Eigensicherheit Ex ia IIC bzw. Ex ib IIC Nur zum Anschluss an bescheinigte eigensichere Stromkreise. Höchstwerte: U_i = 30 V I_i = 130 mA P_i = 1 W L_i = 10 µH C_i vernachlässigbar klein
optional ESK4-T mit ESK4-I/O Modul und Anzeige ESK4-I/O Anschlüsse 1, 2 bzw. 4, 5 (NAMUR) ESK4-I/O Anschlüsse 1, 3 bzw. 4, 6 (OC) bzw. HAN 7D Anschlusspins 1, 2 bzw. 3, 4 ESK4-I/O Anschlüsse 7, 8 (Eingang)	in Zündschutzart Eigensicherheit Ex ia IIC bzw. Ex ib IIC Nur zum Anschluss an bescheinigte eigensichere Stromkreise. Höchstwerte: U_i = 30 V I_i = 130 mA P_i = 1 W L_i vernachlässigbar klein C_i = 10 nF

oder

mit Profibus PA Schnittstelle FISCO Feldgerät ESK4-PA Anschlüsse D, D-	in Zündschutzart Eigensicherheit Ex ia IIC bzw. Ex ib IIC Nur zum Anschluss an einen bescheinigten eigensicheren Stromkreis Höchstwerte: U_i = 24 V I_i = 380 mA P_i = 5,32 W L_i vernachlässigbar klein C_i vernachlässigbar klein bzw. zum Anschluss an einen Busstromkreis nach dem FISCO-Modell

Seite 3/7

EU-Baumusterprüfbescheinigungen ohne Unterschrift und ohne Siegel haben keine Gültigkeit.
Diese EU-Baumusterprüfbescheinigung darf nur unverändert weiterverbreitet werden.
Auszüge oder Änderungen bedürfen der Genehmigung der Physikalisch-Technischen Bundesanstalt.

Physikalisch-Technische Bundesanstalt • Bundesallee 100 • 38116 Braunschweig • DEUTSCHLAND

Anlage zur EU-Baumusterprüfbescheinigung PTB 11 ATEX 2012 X, Ausgabe: 1

oder

mit Foundation Fieldbus Schnittstelle
FISCO Feldgerät
ESK4-FF Anschlüsse D, D-

in Zündschutzart Eigensicherheit Ex ia IIC
bzw. Ex ib IIC
Nur zum Anschluss an einen bescheinigten eigensicheren Stromkreis

Höchstwerte:

U_i = 24 V
I_i = 380 mA
P_i = 5,32 W
L_i vernachlässigbar klein
C_i vernachlässigbar klein

bzw. zum Anschluss an einen Busstromkreis nach dem FISCO-Modell

Anzeigeeinheit M40/.../K.
mit NAMUR Grenzwertgeber
Anschlüsse 1, 2 bzw. 4, 5
HAN 7D Anschlusspins 1, 2 bzw. 3, 4

in Zündschutzart Eigensicherheit Ex ia IIC
bzw. Ex ib IIC
Nur zum Anschluss an bescheinigte eigensichere Stromkreise.

Die Höchstwerte je Stromkreis in Abhängigkeit vom verwendeten Grenzwertgeber sind der folgenden Tabelle zu entnehmen:

Grenzwertgeber Typ	U_i [V]	I_i [mA]	P_i [mW]	L_i [µH]	C_i [nF]
SC3,5-N0-Y....	16	25	64	150	150
I7S23,5-N	16	52	169	150	150
SJ3,5-SN	16	25	64	100	30
SJ3,5-S1N	16	52	169	100	30

Anzeigeeinheit M40/.../R.

mit Reed Schalter
Anschlüsse 1, 3 bzw. 4, 6 bzw.
HAN 7D Anschlusspins 1, 2 bzw. 3, 4

in Zündschutzart Eigensicherheit Ex ia IIC
bzw. Ex ib IIC
Nur zum Anschluss an bescheinigte eigensichere Stromkreise.

Höchstwerte:

U_i = 30 V
I_i = 130 mA
P_i = 1 W
L_i vernachlässigbar klein
C_i vernachlässigbar klein

EU-Baumusterprüfbescheinigungen ohne Unterschrift und ohne Siegel haben keine Gültigkeit.
Diese EU-Baumusterprüfbescheinigung darf nur unverändert weiterverbreitet werden.
Auszüge oder Änderungen bedürfen der Genehmigung der Physikalisch-Technischen Bundesanstalt.

Physikalisch-Technische Bundesanstalt • Bundesallee 100 • 38116 Braunschweig • DEUTSCHLAND

Physikalisch-Technische Bundesanstalt
Braunschweig und Berlin
Nationales Metrologieinstitut

Anlage zur EU-Baumusterprüfbescheinigung PTB 11 ATEX 2012 X, Ausgabe: 1

Einsatz als Kategorie 3-Betriebsmittel, EPL Gc

Anzeigeeinheit M40/ESK/...

mit 4...20 mA Signalausgang (HART) ESK4A Klemmen 11, 12 bzw. HAN 7D Anschlusspins 5, 6	in Zündschutzart Erhöhte Sicherheit ec Nennwerte: U = 14 – 30 V I = 4 – 20 mA
optional ESK4-T mit ESK4-I/O Modul und Anzeige	in Zündschutzart Erhöhte Sicherheit ec Nennwerte:
ESK4-I/O Anschlüsse 1, 2 bzw. 4, 5 (NAMUR)	U = 8 VDC I = 1 mA / 3 mA
ESK4-I/O Anschlüsse 1, 3 bzw. 4, 6 (OC) bzw. HAN 7D Anschlusspins 1, 2 bzw. 3, 4	U < 30 VDC I < 100 mA
ESK4-I/O Anschlüsse 7, 8 (Eingang)	U < 30 VDC I < 2 mA
oder	
mit Profibus PA Schnittstelle ESK4-PA Anschlüsse D, D-	U = 9 – 32 V I = 16 mA
oder	
mit Foundation Fieldbus Schnittstelle ESK4-FF Anschlüsse D, D-	U = 9 – 32 V I = 16 mA
Anzeigeeinheit M40/.../K. mit Schlitzinitiator Anschlüsse 1, 2 bzw. 4, 5 HAN 7D Anschlusspins 1, 2 bzw. 3, 4	in Zündschutzart Erhöhte Sicherheit ec Nennwerte abhängig vom Typ des Schalters U < 30 V I < 100 mA
Anzeigeeinheit M40/.../R. mit Reed-Schalter Anschlüsse 1, 3 bzw. 4, 6 HAN 7D Anschlusspins 1, 2 bzw. 3, 4	in Zündschutzart Erhöhte Sicherheit ec Nennwerte: U < 24 V I < 100 mA

Seite 5/7

EU-Baumusterprüfbescheinigungen ohne Unterschrift und ohne Siegel haben keine Gültigkeit.
Diese EU-Baumusterprüfbescheinigung darf nur unverändert weiterverbreitet werden.
Auszüge oder Änderungen bedürfen der Genehmigung der Physikalisch-Technischen Bundesanstalt.

Physikalisch-Technische Bundesanstalt • Bundesallee 100 • 38116 Braunschweig • DEUTSCHLAND

Physikalisch-Technische Bundesanstalt
Braunschweig und Berlin
Nationales Metrologieinstitut

Anlage zur EU-Baumusterprüfbescheinigung PTB 11 ATEX 2012 X, Ausgabe: 1

Änderungen in Bezug auf vorherige Ausgaben

- Die Zündschutzart „Nichtfunkende Einrichtung Ex nA" entfällt künftig
- Die Zündschutzart Erhöhte Sicherheit Ex ec wird neu eingeführt
- Die Kennzeichnung für die Gruppe IIB entfällt künftig
- Überarbeitung der Kennzeichnung für die Anwendung in durch brennbare Stäube gefährdeten Bereichen
- Überarbeitung der Anschlussbezeichnungen in den elektrischen Daten
- Aktualisierung der „Besonderen Bedingungen"
- Überarbeitung der Typenschilder und der Dokumentation
- Anpassung an den aktuellen Normenstand
- Aktualisierung der Betriebsanleitung

(16) Prüfbericht PTB Ex 19-29093

(17) Besondere Bedingungen

1. Die Anschlussteile für den Potenzialausgleich des Messteils H250 bzw. der Anzeige M40 sind mit dem Potenzialausgleichssystem des explosionsgefährdeten Bereiches zu verbinden.
2. Bei der Verwendung von Messteilen aus Titan ist eine Funkenbildung infolge von Schlageinwirkungen oder Reibvorgängen zwischen Titan und anderen Materialien zu verhindern (entsprechend geschützter Einbau).
3. Bei Betrieb mit brennbaren Medien sind die Messteile in die wiederkehrende Druckprüfung der Anlage mit einzubeziehen.
4. Um einen ausreichenden IP-Schutzgrad zu gewährleisten, sind die mitgelieferten Leitungseinführungen und Blindstopfen oder gleichwertige Typen zu verwenden. Nicht benutzte Leitungseinführungen sind hiermit zu verschließen.
5. Zur Vermeidung der Gefahr elektrostatischer Aufladungen dürfen das Schwebekörper-Durchfluss-Messgerät Typ H250.../M40...-Ex und der Anzeiger Typ M40...-Ex nicht in Bereichen verwendet werden, in denen mit stark ladungserzeugenden Prozessen zu rechnen ist. Die entsprechenden Hinweise in der Betriebsanleitung sind zu beachten.
6. Die zulässigen Umgebungs- und Mediumtemperaturen sind den Tabellen in der Betriebsanleitung zu entnehmen. Alle weiteren Angaben und Hinweise sind entsprechend zu beachten.

EU-Baumusterprüfbescheinigungen ohne Unterschrift und ohne Siegel haben keine Gültigkeit.
Diese EU-Baumusterprüfbescheinigung darf nur unverändert weiterverbreitet werden.
Auszüge oder Änderungen bedürfen der Genehmigung der Physikalisch-Technischen Bundesanstalt.

Physikalisch-Technische Bundesanstalt • Bundesallee 100 • 38116 Braunschweig • DEUTSCHLAND

Physikalisch-Technische Bundesanstalt
Braunschweig und Berlin
Nationales Metrologieinstitut

Anlage zur EU-Baumusterprüfbescheinigung PTB 11 ATEX 2012 X, Ausgabe: 1

(18) Grundlegende Sicherheits- und Gesundheitsanforderungen

Erfüllt durch Übereinstimmung mit den vorgenannten Normen.

Die Norm EN IEC 60079-0:2018 ist noch nicht als harmonisierte Europäische Norm im Amtsblatt der EU gelistet. Die Erfüllung der wesentlichen Sicherheits- und Gesundheitsanforderungen der Richtlinie 2014/34/EU sind jedoch gewährleistet, da die Norm gegenüber der harmonisierten Vorgängernorm ein mindestens gleiches Sicherheitsniveau aufweist.

Konformitätsbewertungsstelle, Sektor Explosionsschutz Braunschweig, 19. September 2019
Im Auftrag

Dr.-Ing. F. Liebesch
Direktor und Professor

Seite 7/7

EU-Baumusterprüfbescheinigungen ohne Unterschrift und ohne Siegel haben keine Gültigkeit.
Diese EU-Baumusterprüfbescheinigung darf nur unverändert weiterverbreitet werden.
Auszüge oder Änderungen bedürfen der Genehmigung der Physikalisch-Technischen Bundesanstalt.

Physikalisch-Technische Bundesanstalt • Bundesallee 100 • 38116 Braunschweig • DEUTSCHLAND

Physikalisch-Technische Bundesanstalt

Braunschweig und Berlin

(1) **EG-Baumusterprüfbescheinigung**

(2) Geräte und Schutzsysteme zur bestimmungsgemäßen Verwendung in explosionsgefährdeten Bereichen - **Richtlinie 94/9/EG**

(3) EG-Baumusterprüfbescheinigungsnummer

PTB 11 ATEX 2012 X

(4) Gerät: Schwebekörper-Durchfluss-Messgerät
Typ H250…/./M40./../……./..-Ex-.. und Anzeiger
Typ M40./../……./..-Ex-..

(5) Hersteller: Krohne Messtechnik GmbH

(6) Anschrift: Ludwig Krohne Straße 5, 47058 Duisburg, Deutschland

(7) Die Bauart dieses Gerätes sowie die verschiedenen zulässigen Ausführungen sind in der Anlage und den darin aufgeführten Unterlagen zu dieser Baumusterprüfbescheinigung festgelegt.

(8) Die Physikalisch-Technische Bundesanstalt bescheinigt als benannte Stelle Nr. 0102 nach Artikel 9 der Richtlinie des Rates der Europäischen Gemeinschaften vom 23. März 1994 (94/9/EG) die Erfüllung der grundlegenden Sicherheits- und Gesundheitsanforderungen für die Konzeption und den Bau von Geräten und Schutzsystemen zur bestimmungsgemäßen Verwendung in explosionsgefährdeten Bereichen gemäß Anhang II der Richtlinie.

Die Ergebnisse der Prüfung sind in dem vertraulichen Bewertungs- und Prüfbericht PTB Ex 11-21108 festgehalten.

(9) Die grundlegenden Sicherheits- und Gesundheitsanforderungen werden erfüllt durch Übereinstimmung mit

EN 60079-0:2009 **EN 60079-11:2007** **EN 60079-15:2010**

(10) Falls das Zeichen „X" hinter der Bescheinigungsnummer steht, wird auf besondere Bedingungen für die sichere Anwendung des Gerätes in der Anlage zu dieser Bescheinigung hingewiesen.

(11) Diese EG-Baumusterprüfbescheinigung bezieht sich nur auf Konzeption und Prüfung des festgelegten Gerätes gemäß Richtlinie 94/9/EG. Weitere Anforderungen dieser Richtlinie gelten für die Herstellung und das Inverkehrbringen dieses Gerätes. Diese Anforderungen werden nicht durch diese Bescheinigung abgedeckt.

(12) Die Kennzeichnung des Gerätes muss die folgenden Angaben enthalten:

Ex **Ex ia IIC T6 Gb** bzw. **Ex ia IIB T6 Gb** bzw. **Ex nA IIC T6 Gc** bzw. **Ex nA IIB T6 Gc**

B112012.dot

Zertifizierungssektor Explosionsschutz
Im Auftrag

Braunschweig, 19. Juli 2011

Dr.-Ing. U. Gerlach
Oberregierungsrat

PHYSIKALISCH-TECHNISCHE BUNDESANSTALT 56

Seite 1/6

EG-Baumusterprüfbescheinigungen ohne Unterschrift und ohne Siegel haben keine Gültigkeit.
Diese EG-Baumusterprüfbescheinigung darf nur unverändert weiterverbreitet werden.
Auszüge oder Änderungen bedürfen der Genehmigung der Physikalisch-Technischen Bundesanstalt.

Physikalisch-Technische Bundesanstalt • Bundesallee 100 • 38116 Braunschweig • DEUTSCHLAND

Physikalisch-Technische Bundesanstalt

Braunschweig und Berlin

(13) **Anlage**

(14) **EG-Baumusterprüfbescheinigung PTB 11 ATEX 2012 X**

(15) Beschreibung des Gerätes

Das Schwebekörper-Durchfluss-Messgerät Typ H250…/./M40./../……/..-Ex-.. dient zur Messung des Volumenstromes brennbarer und nichtbrennbarer Gase und Flüssigkeiten. Es besteht aus einem Messteil der Baureihe H250 und einer Anzeige der Baureihe M40. Das Messteil kann in vertikal oder horizontal verlaufenden Rohrleitungen betrieben werden. Die Messgröße wird bestimmt, indem sich ein Schwebekörper proportional zum Volumenstrom auf eine bestimmte Position einstellt, welche von einem Folgemagneten im Anzeiger in einen Drehwinkel umgeformt und auf ein Zeigersystem übertragen wird.

Die Anzeige M40 beherbergt die elektronischen Baugruppen und besteht aus einem Gehäuse mit eingebautem Modulträger und einer mechanischen Anzeige mit Messwerk. Die Anzeige kann mit verschiedenen Elektronikmodulen zur Signalauswertung bestückt werden.

Desweiteren stehen eine Hochtemperatur (HT)- Variante und unterschiedliche Gehäusematerialien (Aluminium / Edelstahl) zur Verfügung.

Die Signalstromkreise sind entweder in Zündschutzart Eigensicherheit ia bzw. ib oder in Zündschutzart Nichtfunkend nA ausgeführt, was entweder den Einsatz als Kategorie 2- oder Kategorie 3 - Betriebsmittel ermöglicht.

Zulässiger Bereich der Umgebungstemperatur:	-40 (-25) °C bis +65 °C (abhängig von der Geräteausführung).
Zulässiger Bereich der Mediumtemperatur:	-40 °C bis +300 °C (abhängig von der Geräteausführung).
Zulässiger Bereich der Referenzpunkttemperatur:	-40 (-25) °C bis +90 °C (abhängig von der Geräteausführung).

Der Zusammenhang zwischen der höchstzulässigen Mediumtemperatur, der Temperaturklasse, der höchstzulässigen Umgebungstemperatur und der Geräteausführung ist den Tabellen der Betriebsanleitungen zu entnehmen.

Die elektrischen Daten sind wie folgt abhängig von der Zündschutzart und den eingebauten Elektronikmodulen:

EG-Baumusterprüfbescheinigungen ohne Unterschrift und ohne Siegel haben keine Gültigkeit.
Diese EG-Baumusterprüfbescheinigung darf nur unverändert weiterverbreitet werden.
Auszüge oder Änderungen bedürfen der Genehmigung der Physikalisch-Technischen Bundesanstalt.

Physikalisch-Technische Bundesanstalt • Bundesallee 100 • 38116 Braunschweig • DEUTSCHLAND

Physikalisch-Technische Bundesanstalt

Braunschweig und Berlin

Anlage zur EG-Baumusterprüfbescheinigung PTB 11 ATEX 2012 X

Elektrische Daten

Einsatz als Kategorie 2-Betriebsmittel, EPL Gb

Anzeige M40 ESK4

mit Signalausgang ESK4...
(Klemmen 11, 12 / HAN Pin 5, 6)

in Zündschutzart Eigensicherheit Ex ia IIC
bzw. Ex ib IIC
Nur zum Anschluss an bescheinigte eigensichere Stromkreise.

Höchstwerte:

U_i = 30 V
I_i = 130 mA
P_i = 1 W
L_i = 10 µH
C_i vernachlässigbar klein

Anzeige M40 ESK4-T

mit Signalausgang ESK4...
(Klemmen 11, 12 / HAN Pin 5, 6)

in Zündschutzart Eigensicherheit Ex ia IIC
bzw. Ex ib IIC
Nur zum Anschluss an bescheinigte eigensichere Stromkreise.

Höchstwerte:

U_i = 30 V
I_i = 130 mA
P_i = 1 W
L_i = 10 µH
C_i vernachlässigbar klein

und

Modul I/O
(Klemmen 1, 2, 3 bzw. 4, 5, 6 bzw. 7, 8
HAN Pin 1, 2 bzw. 3, 4)

in Zündschutzart Eigensicherheit Ex ia IIC
bzw. Ex ib IIC
Nur zum Anschluss an bescheinigte eigensichere Stromkreise.

Höchstwerte je Stromkreis:

U_i = 30 V
I_i = 130 mA
P_i = 1 W
L_i vernachlässigbar klein
C_i = 10 nF

EG-Baumusterprüfbescheinigungen ohne Unterschrift und ohne Siegel haben keine Gültigkeit.
Diese EG-Baumusterprüfbescheinigung darf nur unverändert weiterverbreitet werden.
Auszüge oder Änderungen bedürfen der Genehmigung der Physikalisch-Technischen Bundesanstalt.

Physikalisch-Technische Bundesanstalt • Bundesallee 100 • 38116 Braunschweig • DEUTSCHLAND

Physikalisch-Technische Bundesanstalt

Braunschweig und Berlin

Anlage zur EG-Baumusterprüfbescheinigung PTB 11 ATEX 2012 X

Anzeige M40 ESK4-FF / ESK4-PA
(Klemmen D, D⊥)

Nur zum Anschluss an einen bescheinigten eigensicheren Stromkreis

Höchstwerte:

U_i = 24 V
I_i = 380 mA
P_i = 5,32 W
L_i vernachlässigbar klein
C_i vernachlässigbar klein

bzw. zum Anschluss an einen Busstromkreis nach dem FISCO-Modell

Anzeige M40 K.
(Klemmen 1, 2 bzw. 4, 5
HAN Pin 1, 2 bzw. 3, 4)

in Zündschutzart Eigensicherheit Ex ia IIC
bzw. Ex ib IIC
Nur zum Anschluss an bescheinigte eigensichere Stromkreise.

Die Höchstwerte je Stromkreis in Abhängigkeit vom verwendeten Grenzwertgeber sind der folgenden Tabelle zu entnehmen:

Grenzwertgeber Typ	U_i [V]	I_i [mA]	P_i [mW]	L_i [µH]	C_i [nF]
SC3,5-N0-Y....	16	25	64	150	150
I7S23,5-N	16	52	169	150	150
SJ3,5-SN	16	25	64	30	100
SJ3,5-S1N	16	52	169	30	100

Einsatz als Kategorie 3-Betriebsmittel, EPL Gc

Anzeige M40 ESK4

mit Signalausgang ESK4...
(Klemmen 11, 12)

in Zündschutzart Nichtfunkend nA

Nennwerte je Stromkreis:

U = 14 – 32 V, I = 4 – 20 mA

EG-Baumusterprüfbescheinigungen ohne Unterschrift und ohne Siegel haben keine Gültigkeit.
Diese EG-Baumusterprüfbescheinigung darf nur unverändert weiterverbreitet werden.
Auszüge oder Änderungen bedürfen der Genehmigung der Physikalisch-Technischen Bundesanstalt.

Physikalisch-Technische Bundesanstalt • Bundesallee 100 • 38116 Braunschweig • DEUTSCHLAND

Physikalisch-Technische Bundesanstalt

Braunschweig und Berlin

Anlage zur EG-Baumusterprüfbescheinigung PTB 11 ATEX 2012 X

Anzeige M40 ESK4-T	
mit Signalausgang ESK4… (Klemmen 11, 12)	in Zündschutzart Nichtfunkend nA Nennwerte je Stromkreis: U = 14 – 32 V, I = 4 – 20 mA
und	
Modul I/O (Klemmen 1, 3 (OC) bzw. 4, 6 (OC) bzw. 1, 2 (NAMUR) bzw. 4, 5 (NAMUR) bzw. 7, 8 (Input))	in Zündschutzart Nichtfunkend nA Nennwerte je Stromkreis: U = 8 – 32 V, I = 1 mA – 100 mA U = 8 V, I ≤ 1 / ≥ 3 mA U = 8 – 32 V, I □ 2 mA
Anzeige M40 ESK4-FF / ESK4-PA (Klemmen D, D⊥)	in Zündschutzart Nichtfunkend nA zum Anschluss an Busstromkreise Nennwerte: U = 9 – 32 V, I = 16 mA
Anzeige M40 K. (Klemmen 1, 2 bzw. 4, 5)	in Zündschutzart Nichtfunkend nA Nennwerte je Stromkreis: U = 8 V, I ≤ 1 / ≥ 3 mA Grenzwertgeber Typ SJ3,5-SN SJ3,5-S1N SC3,5-N0-Y…. I7S23,5-N
Ausgangssignal Signalausgang ESK4…	normiertes Stromsignal 4 – 20 mA mit überlagertem HART-Kommunikationssignal in 2-Leiter-Anschluss U_N = 14 V – 32 V DC
Modul-I/O	U_N = 12,7 V – 32 V DC I = 1 mA bzw. 3 mA (je nach Schalterstellung) bzw. open-collector-Ausgang
ESK4-FF, ESK4-PA	Manchester-codiertes Stromsignal 10 ± 9 mA
Grenzwertgeber	U_N = 8 V I = 1 mA bzw. 3 mA (je nach Schalterstellung)

Seite 5/6

EG-Baumusterprüfbescheinigungen ohne Unterschrift und ohne Siegel haben keine Gültigkeit.
Diese EG-Baumusterprüfbescheinigung darf nur unverändert weiterverbreitet werden.
Auszüge oder Änderungen bedürfen der Genehmigung der Physikalisch-Technischen Bundesanstalt.

Physikalisch-Technische Bundesanstalt • Bundesallee 100 • 38116 Braunschweig • DEUTSCHLAND

Physikalisch-Technische Bundesanstalt

Braunschweig und Berlin

Anlage zur EG-Baumusterprüfbescheinigung PTB 11 ATEX 2012 X

(16) Bewertungs- und Prüfbericht PTB Ex 11-21108

(17) Besondere Bedingungen

1. Die Anschlussteile für den Potenzialausgleich des Messteils H250 bzw. der Anzeige M40 sind mit dem Potenzialausgleichssystem des explosionsgefährdeten Bereiches zu verbinden.
2. Bei der Verwendung von Messteilen aus Titan ist eine Funkenbildung infolge von Schlageinwirkungen oder Reibvorgängen zwischen Titan und anderen Materialien zu verhindern (entsprechend geschützter Einbau).
3. Bei Betrieb mit brennbaren Medien sind die Messteile in die wiederkehrende Druckprüfung der Anlage mit einzubeziehen.
4. Um einen ausreichenden IP-Schutzgrad zu gewährleisten, sind die mitgelieferten Leitungseinführungen und Blindstopfen oder gleichwertige Typen zu verwenden. Nicht benutzte Leitungseinführungen sind hiermit zu verschließen.
5. Das Schwebekörper-Durchfluss-Messgerät Typ H250..././M40./../...../..-Ex-.. und der Anzeiger Typ M40./../...../..-Ex-.. verfügen über eine Sichtscheibe, die sich bei der Reinigung elektrostatisch aufladen kann. Auf diese Gefahr ist durch ein Warnschild auf dem Gerät und einen Hinweis in der Betriebsanleitung hinzuweisen.
6. Die zulässigen Umgebungs- und Mediumtemperaturen sind den Tabellen in der Betriebsanleitung zu entnehmen. Alle weiteren Angaben und Hinweise sind entsprechend zu beachten.

(18) Grundlegende Sicherheits- und Gesundheitsanforderungen

erfüllt durch Übereinstimmung mit den vorgenannten Normen

Zertifizierungssektor Explosionsschutz
Im Auftrag

Dr.-Ing. U. Gerlach
Oberregierungsrat

Braunschweig, 19. Juli 2011

PHYSIKALISCH-TECHNISCHE BUNDESANSTALT 56

Seite 6/6

EG-Baumusterprüfbescheinigungen ohne Unterschrift und ohne Siegel haben keine Gültigkeit.
Diese EG-Baumusterprüfbescheinigung darf nur unverändert weiterverbreitet werden.
Auszüge oder Änderungen bedürfen der Genehmigung der Physikalisch-Technischen Bundesanstalt.

Physikalisch-Technische Bundesanstalt • Bundesallee 100 • 38116 Braunschweig • DEUTSCHLAND

Physikalisch-Technische Bundesanstalt
Braunschweig und Berlin
Nationales Metrologieinstitut

1. ERGÄNZUNG

gemäß Richtlinie 94/9/EG Anhang III Ziffer 6

zur EG-Baumusterprüfbescheinigung PTB 11 ATEX 2012 X

Gerät: Schwebekörper-Durchfluss-Messgerät Typ H250…/./M40./../……./..-Ex-..
und Anzeiger Typ M40./../……./..-Ex-..

Kennzeichnung: **II 2 G Ex ia IIC T6 Gb bzw. II 2 G Ex ia IIB T6 Gb bzw.**
II 3 G Ex nA IIC T6 Gc bzw. II 3 G Ex nA IIB T6 Gc

Hersteller: Krohne Messtechnik GmbH

Anschrift: Ludwig Krohne Straße 5, 47058 Duisburg, Deutschland

Beschreibung der Ergänzungen und Änderungen

Das Schwebekörper-Durchfluss-Messgerät Typ H250…/./M40./../……./..-Ex-.. und der Anzeiger Typ M40./../……./..-Ex-.. dürfen künftig auch nach den im Prüfbericht aufgeführten Prüfungsunterlagen gefertigt und betrieben werden. Die Änderungen betreffen die Anpassung an den aktuellen Normenstand, die Einführung einer neuen Ausführung mit Reed-Schaltern, die Erweiterung und Korrektur der elektrischen Daten und die Erweiterung der Kennzeichnung der eigensicheren Ausführung bezüglich der Temperaturklassen und für den künftigen Einsatz in durch brennbare Stäube gefährdeten Bereichen.
Da die eingebaute Elektronikeinheit separat bescheinigt ist (PTB 10 ATEX 2021 X) ist diese künftig nicht mehr Bestandteil der Dokumentation.

Die elektrischen Daten werden wie folgt korrigiert:

Elektrische Daten

Anzeige M40 K.
(Klemmen 1, 2 bzw. 4, 5
HAN Pin 1, 2 bzw. 3, 4)

in Zündschutzart Eigensicherheit Ex ia IIC
bzw. Ex ib IIC
Nur zum Anschluss an bescheinigte eigensichere Stromkreise.

Die Höchstwerte je Stromkreis in Abhängigkeit vom verwendeten Grenzwertgeber sind der folgenden Tabelle zu entnehmen:

Grenzwertgeber Typ	U_i [V]	I_i [mA]	P_i [mW]	L_i [µH]	C_i [nF]
SC3,5-N0-Y….	16	25	64	150	150
I7S23,5-N	16	52	169	150	150
SJ3,5-SN	16	25	64	100	30
SJ3,5-S1N	16	52	169	100	30

ZSEx1010d b

Seite 1/2

EG-Baumusterprüfbescheinigungen ohne Unterschrift und ohne Siegel haben keine Gültigkeit.
Diese EG-Baumusterprüfbescheinigung darf nur unverändert weiterverbreitet werden.
Auszüge oder Änderungen bedürfen der Genehmigung der Physikalisch-Technischen Bundesanstalt.

Physikalisch-Technische Bundesanstalt • Bundesallee 100 • 38116 Braunschweig • DEUTSCHLAND

Physikalisch-Technische Bundesanstalt
Braunschweig und Berlin
Nationales Metrologieinstitut

1. Ergänzung zur EG-Baumusterprüfbescheinigung PTB 11 ATEX 2012 X

Die elektrischen Daten der neuen Gerätevariante lauten:

Einsatz als Kategorie 2-Betriebsmittel, EPL Gb

Speisung Reedschalter (Kontaktanschlüse „min“ 1(+), 3(-) Kontaktanschlüse „max“ 4(+), 6(-))	in Zündschutzart Eigensicherheit Ex ia IIC Nur zum Anschluss an bescheinigte eigensichere Stromkreise. Höchstwerte je Stromkreis: U_i = 30 V I_i = 100 mA P_i = 1 W L_i vernachlässigbar klein C_i vernachlässigbar klein

Die Kennzeichnung lautet künftig:

II 2 G Ex ia IIC T6...T2 Gb bzw. II 2 G Ex ia IIB T6...T2 Gb bzw.
II 3 G Ex nA IIC T6...T2 Gc bzw. II 3 G Ex nA IIB T6...T2 Gc

Für den Einsatz in durch brennbare Stäube gefährdeten Bereichen ist das Gerät künftig wie folgt zu kennzeichnen:

II 2 D Ex ia IIIC T85 °C Db

Die „Besonderen Bedingungen“ sowie alle weiteren elektrischen Daten und Angaben der EG-Baumusterprüfbescheinigung gelten unverändert auch für diese erste Ergänzung.

Angewandte Normen

EN 60079-0:2012 **EN 60079-11:2012** **EN 60079-15:2010**

Prüfbericht: PTB Ex 15-24150

Konformitätsbewertungsstelle, Sektor Explosionsschutz
Im Auftrag

Braunschweig, 9. Februar 2015

Dr.-Ing. T. Horn
Regierungsrat

PHYSIKALISCH-TECHNISCHE BUNDESANSTALT 56

Seite 2/2

EG-Baumusterprüfbescheinigungen ohne Unterschrift und ohne Siegel haben keine Gültigkeit.
Diese EG-Baumusterprüfbescheinigung darf nur unverändert weiterverbreitet werden.
Auszüge oder Änderungen bedürfen der Genehmigung der Physikalisch-Technischen Bundesanstalt.

Physikalisch-Technische Bundesanstalt • Bundesallee 100 • 38116 Braunschweig • DEUTSCHLAND

A.14.6 Calibration Certificate

KROHNE

Calibration Certificate - Kalibrierzertifikat - Certificat d'étalonnage

Customer / Kunde / Client	:	Emmerthaler Apparatebau GmbH
Customer Order / Bestellnummer / Commande Client	:	BST2200044/ 0
Product / Produkt / Produit	:	KROHNE Schwebekörper-Durchflussmessgerät
Type / Typ / Type	:	H250/RR/M40/ESK-Ex
Serial Number / Seriennummer / Numéro de série	:	D220000001138878
Sales Order / VK-Auftrag / Commande de vente	:	010268447 / 10
Tag Number / Tagnummer / Repère	:	
Device / Gerät / Instrument	:	011365312.001

Maximum permissible relative error / maximal zulässige relative Messabweichung / écart de mesure relatif maximal admissible: ± 1,6 % acc. to / nach / selon VDI/VDE 3513-2 (qG=50 %)

Calibration Method / Kalibriermethode / Méthode d'étalonnage

This is to certify, that the a.m. measuring device has been calibrated and tested on accuracy. The reference flow rates for calibration were calculated according to VDI/VDE 3513-1 and the calibration was performed according to procedure IMSD 2.3.5 TI 00007. The instrument appropriates to the a.m. maximum permissible measurement error.

Wir bestätigen hiermit, dass das o.g. Messgerät kalibriert und auf Messgenauigkeit geprüft wurde. Die Umrechnung auf Referenzdurchflusswerte zur Kalibrierung erfolgte nach Richtlinie VDI/VDE 3513-1. Die Kalibrierung wurde nach Anweisung IMSD 2.3.5 TI 00007 durchgeführt. Das Messgerät entspricht der oben genannten maximal zulässigen relativen Messabweichung.

Par la présente, nous confirmons que l'instrument de mesure ci-dessus a été étalonné et que sa précision de mesure a été vérifiée. Les données d'étalonnage de référence ont été calculées conformément à la directive VDI/VDE 3513-1 et l'étalonnage a été effectué selon la procédure IMSD 2.3.5 TI 00007. L'instrument correspond à un écart de mesure relatif maximal admissible ci-dessus.

Test equipment Data / Daten Kalibrierstand / Données du banc d'étalonnage

Serial Number / Seriennummer / Numéro de série	: BP 444
Calibration fluid / Kalibrierfluid / Fluide d'étalonnage	: Water / Wasser / Eau (20 °C; 1 bar gauge)

Calibration Results / Kalibrierergebnis / Résultats d'étalonnage

	Calibration rig / Kalibrierstand / Banc d'étalonnage				Transducer / Transmitter / Transmetteur			
Scale Skale Echelle	Nominal value Sollwert Débit réf.	Actual value Istwert Débit mesurée	Deviation Abweichung Ecart	Allowable Deviation Zul. Abweichung Ecart admis	Nominal value Sollwert Débit réf.	Actual value Istwert Débit mesurée	Deviation Abweichung Ecart	Allowable Deviation Zul. Abweichung Ecart admis
m³/h	m³/h	m³/h	%	%	mA	mA	%	%
16	15,78	15,94	1,03	1,6	20	20,03	0,16	1,6
12	11,95	12	0,38	1,6	16	16,06	0,52	1,6
8	7,977	8,016	0,49	1,6	12	12,07	0,89	1,6
4	3,978	3,968	-0,25	3,2	8	7,951	-1,23	3,2
1,6	1,605	1,632	1,68	8	5,6	5,665	4,06	8

Process Data / Messstoffdaten / Données de processus

Medium / Messstoff / Fluid	: Wasser (H2O)
Temperature / Temperatur / Température	: 40 °C
Pressure / Druck / Pression	: 3 bar g
Density / Dichte / Densité	: 992,219 kg/m³
Viscosity / Viskosität / Viscosité	: 0,652 mPa.s
Measured range / Messbereich / Étendue de mesure	: 1,6 ... 16 m³/h
Transducer / Transmitter / Transmetteur	: Q = 0 % ≙ 4 mA (HART 7.4)
	: Q = 100 % ≙ 20 mA (HART 7.4)

Date / Datum / Date : 15. March 2022

This certificate is produced with EDP and valid without signature.
Dieses Zertifikat wurde maschinell erstellt und ist ohne Unterschrift gültig.
Ce certificat a été généré par un système automatisé, il est valide sans signature

KROHNE Messtechnik GmbH, Ludwig-Krohne-Str. 5, 47058, Duisburg, Germany, Tel: +49 203 301 0, Fax: +49 203 301 10 389, http://www.krohne.com
Sitz der Gesellschaft: Duisburg HRB 6348
Geschäftsführer: Dr. Michael Deilmann, Lars Lemke, Ingo Wald

1/1

KROHNE

Calibration Certificate - Kalibrierzertifikat - Certificat d'étalonnage

Customer / Kunde / Client	:	Emmerthaler Apparatebau GmbH
Customer Order / Bestellnummer / Commande Client	:	BST2200044/ 0
Product / Produkt / Produit	:	KROHNE Schwebekörper-Durchflussmessgerät
Type / Typ / Type	:	H250/RR/M40/ESK-Ex
Serial Number / Seriennummer / Numéro de série	:	D220000001138879
Sales Order / VK-Auftrag / Commande de vente	:	010268447 / 10
Tag Number / Tagnummer / Repère	:	

Device / Gerät / Instrument : 011365312.002

Maximum permissible relative error / maximal zulässige relative Messabweichung / écart de mesure relatif maximal admissible: ± 1,6 % acc. to / nach / selon VDI/VDE 3513-2 (qG=50 %)

Calibration Method / Kalibriermethode / Méthode d'étalonnage

This is to certify, that the a.m. measuring device has been calibrated and tested on accuracy. The reference flow rates for calibration were calculated according to VDI/VDE 3513-1 and the calibration was performed according to procedure IMSD 2.3.5 TI 00007. The instrument appropriates to the a.m. maximum permissible measurement error.

Wir bestätigen hiermit, dass das o.g. Messgerät kalibriert und auf Messgenauigkeit geprüft wurde. Die Umrechnung auf Referenzdurchflusswerte zur Kalibrierung erfolgte nach Richtlinie VDI/VDE 3513-1. Die Kalibrierung wurde nach Anweisung IMSD 2.3.5 TI 00007 durchgeführt. Das Messgerät entspricht der oben genannten maximal zulässigen relativen Messabweichung.

Par la présente, nous confirmons que l'instrument de mesure ci-dessus a été étalonné et que sa précision de mesure a été vérifiée. Les données d'étalonnage de référence ont été calculées conformément à la directive VDI/VDE 3513-1 et l'étalonnage a été effectué selon la procédure IMSD 2.3.5 TI 00007. L'instrument correspond à un écart de mesure relatif maximal admissible ci-dessus.

Test equipment Data / Daten Kalibrierstand / Données du banc d'étalonnage

Serial Number / Seriennummer / Numéro de série : BP 444

Calibration fluid / Kalibrierfluid / Fluide d'étalonnage : Water / Wasser / Eau (20 °C; 1 bar gauge)

Calibration Results / Kalibrierergebnis / Résultats d'étalonnage

	Calibration rig / Kalibrierstand / Banc d'étalonnage				Transducer / Transmitter / Transmetteur			
Scale Skale Echelle	Nominal value Sollwert Débit réf.	Actual value Istwert Débit mesurée	Deviation Abweichung Ecart	Allowable Deviation Zul. Abweichung Ecart admis	Nominal value Sollwert Débit réf.	Actual value Istwert Débit mesurée	Deviation Abweichung Ecart	Allowable Deviation Zul. Abweichung Ecart admis
m³/h	m³/h	m³/h	%	%	mA	mA	%	%
16	15,78	15,83	0,34	1,6	20	20,01	0,06	1,6
12	11,95	12	0,42	1,6	16	16,12	1,03	1,6
8	7,977	8,024	0,59	1,6	12	12,08	0,99	1,6
4	3,978	4,051	1,84	3,2	8	8,076	1,9	3,2
1,6	1,605	1,621	1	8	5,6	5,656	3,5	8

Process Data / Messstoffdaten / Données de processus

Medium / Messstoff / Fluid	: Wasser (H2O)
Temperature / Temperatur / Température	: 40 °C
Pressure / Druck / Pression	: 3 bar g
Density / Dichte / Densité	: 992,219 kg/m³
Viscosity / Viskosität / Viscosité	: 0,652 mPa.s
Measured range / Messbereich / Étendue de mesure	: 1,6 ... 16 m³/h
Transducer / Transmitter / Transmetteur	: Q = 0 % ≙ 4 mA (HART 7.4)
	: Q = 100 % ≙ 20 mA (HART 7.4)

Date / Datum / Date : 15. March 2022

This certificate is produced with EDP and valid without signature.
Dieses Zertifikat wurde maschinell erstellt und ist ohne Unterschrift gültig.
Ce certificat a été généré par un système automatisé, il est valide sans signature

KROHNE Messtechnik GmbH, Ludwig-Krohne-Str. 5, 47058, Duisburg, Germany, Tel: +49 203 301 0, Fax: +49 203 301 10 389, http://www.krohne.com
Sitz der Gesellschaft: Duisburg HRB 6348
Geschäftsführer: Dr. Michael Deilmann, Lars Lemke, Ingo Wald

KROHNE

Calibration Certificate - Kalibrierzertifikat - Certificat d'étalonnage

Customer / Kunde / Client	:	Emmerthaler Apparatebau GmbH
Customer Order / Bestellnummer / Commande Client	:	BST2200044/ 0
Product / Produkt / Produit	:	KROHNE Schwebekörper-Durchflussmessgerät
Type / Typ / Type	:	H250/RR/M40/ESK-Ex
Serial Number / Seriennummer / Numéro de série	:	D220000001138880
Sales Order / VK-Auftrag / Commande de vente	:	010268447 / 10
Tag Number / Tagnummer / Repère	:	

Device / Gerät / Instrument : 011365312.003

Maximum permissible relative error / maximal zulässige relative Messabweichung / écart de mesure relatif maximal admissible: ± 1,6 % acc. to / nach / selon VDI/VDE 3513-2 (qG=50 %)

Calibration Method / Kalibriermethode / Méthode d'étalonnage

This is to certify, that the a.m. measuring device has been calibrated and tested on accuracy. The reference flow rates for calibration were calculated according to VDI/VDE 3513-1 and the calibration was performed according to procedure IMSD 2.3.5 TI 00007. The instrument appropriates to the a.m. maximum permissible measurement error.

Wir bestätigen hiermit, dass das o.g. Messgerät kalibriert und auf Messgenauigkeit geprüft wurde. Die Umrechnung auf Referenzdurchflusswerte zur Kalibrierung erfolgte nach Richtlinie VDI/VDE 3513-1. Die Kalibrierung wurde nach Anweisung IMSD 2.3.5 TI 00007 durchgeführt. Das Messgerät entspricht der oben genannten maximal zulässigen relativen Messabweichung.

Par la présente, nous confirmons que l'instrument de mesure ci-dessus a été étalonné et que sa précision de mesure a été vérifiée. Les données d'étalonnage de référence ont été calculées conformément à la directive VDI/VDE 3513-1 et l'étalonnage a été effectué selon la procédure IMSD 2.3.5 TI 00007. L'instrument correspond à un écart de mesure relatif maximal admissible ci-dessus.

Test equipment Data / Daten Kalibrierstand / Données du banc d'étalonnage

Serial Number / Seriennummer / Numéro de série : BP 444

Calibration fluid / Kalibrierfluid / Fluide d'étalonnage : Water / Wasser / Eau (20 °C; 1 bar gauge)

Calibration Results / Kalibrierergebnis / Résultats d'étalonnage

	Calibration rig / Kalibrierstand / Banc d'étalonnage				Transducer / Transmitter / Transmetteur			
Scale Skale Echelle	Nominal value Sollwert Débit réf.	Actual value Istwert Débit mesurée	Deviation Abweichung Ecart	Allowable Deviation Zul. Abweichung Ecart admis	Nominal value Sollwert Débit réf.	Actual value Istwert Débit mesurée	Deviation Abweichung Ecart	Allowable Deviation Zul. Abweichung Ecart admis
m³/h	m³/h	m³/h	%	%	mA	mA	%	%
16	15,78	15,76	-0,12	1,6	20	20,12	0,77	1,6
12	11,95	12,03	0,69	1,6	16	16,14	1,19	1,6
8	7,977	8,001	0,3	1,6	12	12,08	0,95	1,6
4	3,978	4,065	2,19	3,2	8	8,042	1,05	3,2
1,6	1,605	1,632	1,68	8	5,6	5,601	0,06	8

Process Data / Messstoffdaten / Données de processus

Medium / Messstoff / Fluid : Wasser (H2O)
Temperature / Temperatur / Température : 40 °C
Pressure / Druck / Pression : 3 bar g
Density / Dichte / Densité : 992,219 kg/m³
Viscosity / Viskosität / Viscosité : 0,652 mPa.s
Measured range / Messbereich / Étendue de mesure : 1,6 ... 16 m³/h
Transducer / Transmitter / Transmetteur : Q = 0 % ≙ 4 mA (HART 7.4)
: Q = 100 % ≙ 20 mA (HART 7.4)

Date / Datum / Date : 15. March 2022

This certificate is produced with EDP and valid without signature.
Dieses Zertifikat wurde maschinell erstellt und ist ohne Unterschrift gültig.
Ce certificat a été généré par un système automatisé, il est valide sans signature

KROHNE Messtechnik GmbH, Ludwig-Krohne-Str. 5, 47058, Duisburg, Germany, Tel: +49 203 301 0, Fax: +49 203 301 10 389, http://www.krohne.com
Sitz der Gesellschaft: Duisburg HRB 6348
Geschäftsführer: Dr. Michael Deilmann, Lars Lemke, Ingo Wald

KROHNE

Calibration Certificate - Kalibrierzertifikat - Certificat d'étalonnage

Customer / Kunde / Client	:	Emmerthaler Apparatebau GmbH
Customer Order / Bestellnummer / Commande Client	:	BST2200044/ 0
Product / Produkt / Produit	:	KROHNE Schwebekörper-Durchflussmessgerät
Type / Typ / Type	:	H250/RR/M40/ESK-Ex
Serial Number / Seriennummer / Numéro de série	:	D220000001138881
Sales Order / VK-Auftrag / Commande de vente	:	010268447 / 10
Tag Number / Tagnummer / Repère	:	

Device / Gerät / Instrument : 011365312.004

Maximum permissible relative error / maximal zulässige relative Messabweichung / écart de mesure relatif maximal admissible: ± 1,6 % acc. to / nach / selon VDI/VDE 3513-2 (qG=50 %)

Calibration Method / Kalibriermethode / Méthode d'étalonnage

This is to certify, that the a.m. measuring device has been calibrated and tested on accuracy. The reference flow rates for calibration were calculated according to VDI/VDE 3513-1 and the calibration was performed according to procedure IMSD 2.3.5 TI 00007. The instrument appropriates to the a.m. maximum permissible measurement error.

Wir bestätigen hiermit, dass das o.g. Messgerät kalibriert und auf Messgenauigkeit geprüft wurde. Die Umrechnung auf Referenzdurchflusswerte zur Kalibrierung erfolgte nach Richtlinie VDI/VDE 3513-1. Die Kalibrierung wurde nach Anweisung IMSD 2.3.5 TI 00007 durchgeführt. Das Messgerät entspricht der oben genannten maximal zulässigen relativen Messabweichung.

Par la présente, nous confirmons que l'instrument de mesure ci-dessus a été étalonné et que sa précision de mesure a été vérifiée. Les données d'étalonnage de référence ont été calculées conformément à la directive VDI/VDE 3513-1 et l'étalonnage a été effectué selon la procédure IMSD 2.3.5 TI 00007. L'instrument correspond à un écart de mesure relatif maximal admissible ci-dessus.

Test equipment Data / Daten Kalibrierstand / Données du banc d'étalonnage

Serial Number / Seriennummer / Numéro de série	: BP 444
Calibration fluid / Kalibrierfluid / Fluide d'étalonnage	: Water / Wasser / Eau (20 °C; 1 bar gauge)

Calibration Results / Kalibrierergebnis / Résultats d'étalonnage

	Calibration rig / Kalibrierstand / Banc d'étalonnage				Transducer / Transmitter / Transmetteur			
Scale Skale Echelle	Nominal value Sollwert Débit réf.	Actual value Istwert Débit mesurée	Deviation Abweichung Ecart	Allowable Deviation Zul. Abweichung Ecart admis	Nominal value Sollwert Débit réf.	Actual value Istwert Débit mesurée	Deviation Abweichung Ecart	Allowable Deviation Zul. Abweichung Ecart admis
m³/h	m³/h	m³/h	%	%	mA	mA	%	%
16	15,78	15,81	0,2	1,6	20	20	-0,03	1,6
12	11,95	12,03	0,68	1,6	16	16,07	0,61	1,6
8	7,977	7,976	-0,01	1,6	12	12,01	0,12	1,6
4	3,978	3,934	-1,11	3,2	8	7,952	-1,2	3,2
1,6	1,605	1,545	-3,74	8	5,6	5,525	-4,69	8

Process Data / Messstoffdaten / Données de processus

Medium / Messstoff / Fluid	: Wasser (H2O)
Temperature / Temperatur / Température	: 40 °C
Pressure / Druck / Pression	: 3 bar g
Density / Dichte / Densité	: 992,219 kg/m³
Viscosity / Viskosität / Viscosité	: 0,652 mPa.s
Measured range / Messbereich / Étendue de mesure	: 1,6 ... 16 m³/h
Transducer / Transmitter / Transmetteur	: Q = 0 % ≙ 4 mA (HART 7.4)
	: Q = 100 % ≙ 20 mA (HART 7.4)

Date / Datum / Date : 15. March 2022

This certificate is produced with EDP and valid without signature.
Dieses Zertifikat wurde maschinell erstellt und ist ohne Unterschrift gültig.
Ce certificat a été généré par un système automatisé, il est valide sans signature

KROHNE Messtechnik GmbH, Ludwig-Krohne-Str. 5, 47058, Duisburg, Germany, Tel: +49 203 301 0, Fax: +49 203 301 10 389, http://www.krohne.com
Sitz der Gesellschaft: Duisburg HRB 6348
Geschäftsführer: Dr. Michael Deilmann, Lars Lemke, Ingo Wald

KROHNE

Calibration Certificate - Kalibrierzertifikat - Certificat d'étalonnage

Customer / Kunde / Client	:	Emmerthaler Apparatebau GmbH
Customer Order / Bestellnummer / Commande Client	:	BST2200044/ 0
Product / Produkt / Produit	:	KROHNE Schwebekörper-Durchflussmessgerät
Type / Typ / Type	:	H250/RR/M40/ESK-Ex
Serial Number / Seriennummer / Numéro de série	:	D220000001138882
Sales Order / VK-Auftrag / Commande de vente	:	010268447 / 10
Tag Number / Tagnummer / Repère	:	

Device / Gerät / Instrument : 011365312.005

Maximum permissible relative error / maximal zulässige relative Messabweichung / écart de mesure relatif maximal admissible: ± 1,6 % acc. to / nach / selon VDI/VDE 3513-2 (qG=50 %)

Calibration Method / Kalibriermethode / Méthode d'étalonnage

This is to certify, that the a.m. measuring device has been calibrated and tested on accuracy. The reference flow rates for calibration were calculated according to VDI/VDE 3513-1 and the calibration was performed according to procedure IMSD 2.3.5 TI 00007. The instrument appropriates to the a.m. maximum permissible measurement error.

Wir bestätigen hiermit, dass das o.g. Messgerät kalibriert und auf Messgenauigkeit geprüft wurde. Die Umrechnung auf Referenzdurchflusswerte zur Kalibrierung erfolgte nach Richtlinie VDI/VDE 3513-1. Die Kalibrierung wurde nach Anweisung IMSD 2.3.5 TI 00007 durchgeführt. Das Messgerät entspricht der oben genannten maximal zulässigen relativen Messabweichung.

Par la présente, nous confirmons que l'instrument de mesure ci-dessus a été étalonné et que sa précision de mesure a été vérifiée. Les données d'étalonnage de référence ont été calculées conformément à la directive VDI/VDE 3513-1 et l'étalonnage a été effectué selon la procédure IMSD 2.3.5 TI 00007. L'instrument correspond à un écart de mesure relatif maximal admissible ci-dessus.

Test equipment Data / Daten Kalibrierstand / Données du banc d'étalonnage

Serial Number / Seriennummer / Numéro de série : BP 444

Calibration fluid / Kalibrierfluid / Fluide d'étalonnage : Water / Wasser / Eau (20 °C; 1 bar gauge)

Calibration Results / Kalibrierergebnis / Résultats d'étalonnage

	Calibration rig / Kalibrierstand / Banc d'étalonnage				Transducer / Transmitter / Transmetteur			
Scale Skale Echelle	Nominal value Sollwert Débit réf.	Actual value Istwert Débit mesurée	Deviation Abweichung Ecart	Allowable Deviation Zul. Abweichung Ecart admis	Nominal value Sollwert Débit réf.	Actual value Istwert Débit mesurée	Deviation Abweichung Ecart	Allowable Deviation Zul. Abweichung Ecart admis
m³/h	m³/h	m³/h	%	%	mA	mA	%	%
16	15,78	15,91	0,84	1,6	20	20,19	1,17	1,6
12	11,95	12,07	1,04	1,6	16	16,12	0,99	1,6
8	7,977	7,984	0,09	1,6	12	12,05	0,57	1,6
4	3,978	3,926	-1,31	3,2	8	8,068	1,7	3,2
1,6	1,605	1,531	-4,61	8	5,6	5,695	5,94	8

Process Data / Messstoffdaten / Données de processus

Medium / Messstoff / Fluid	: Wasser (H2O)
Temperature / Temperatur / Température	: 40 °C
Pressure / Druck / Pression	: 3 bar g
Density / Dichte / Densité	: 992,219 kg/m³
Viscosity / Viskosität / Viscosité	: 0,652 mPa.s
Measured range / Messbereich / Étendue de mesure	: 1,6 ... 16 m³/h
Transducer / Transmitter / Transmetteur	: Q = 0 % ≙ 4 mA (HART 7.4)
	: Q = 100 % ≙ 20 mA (HART 7.4)

Date / Datum / Date : 15. March 2022

This certificate is produced with EDP and valid without signature.
Dieses Zertifikat wurde maschinell erstellt und ist ohne Unterschrift gültig.
Ce certificat a été généré par un système automatisé, il est valide sans signature

KROHNE Messtechnik GmbH, Ludwig-Krohne-Str. 5, 47058, Duisburg, Germany, Tel: +49 203 301 0, Fax: +49 203 301 10 389, http://www.krohne.com
Sitz der Gesellschaft: Duisburg HRB 6348
Geschäftsführer: Dr. Michael Deilmann, Lars Lemke, Ingo Wald

A.14.7 Material certificates

KROHNE

List of material certificates – Liste der Materialzertifikate – Liste de certificat matière

Customer / Kunde / Client	:	Emmerthaler Apparatebau GmbH
Customer order / Bestellnummer / Commande client	:	BST2200106/ 0
Product / Produkt / Produit	:	KROHNE Schwebekörper-Durchflussmessgerät
Type / Typ / Type	:	H250/RR/M40/ESK-Ex
Production order / Produktionsauftrag / ordre de fabrication	:	011365313
Sales order / VK-Auftrag / Ordre de vente	:	010268543 / 10

List of marking / Liste der Kennzeichnungen / Liste de repère : see attachment / siehe Anlage / cf annexe

Ablage Nr Code	Benennung Description Description	Werkstoff Material Matière	Chargen-Nr. Heat No. N° de charge	Ersatzkennz. Code de remplacemen	Hersteller Manufacturer Fournisseur	Nachweis Certificate Certificat
61779	Rohr/tube 76,1x3,6	1.4401/1.4404-TP316/TP316L	A08242 123064		Centravis	3.1 EN 10216-5 / AD 2000 W2 /
62639	Flansch/flange DN40 PN40	1.4401/1.4404-F316/F316L	E210029 12626		Ewald Waffenschmidt	3.1 DIN EN 10222-5, ASME SA1

Duisburg, 14. Mrz. 22

KROHNE Messtechnik GmbH

KROHNE Messtechnik GmbH , Ludwig-Krohne-Str. 5, 47058 Duisburg, Germany, Tel.: +49 (0)203 301 0, Fax: +49 (0)203 301 10 389, www.krohne.com
Sitz der Gesellschaft: Duisburg HRB 6348
Geschäftsführer: Dr. Michael Deilmann, Lars Lemke, Ingo Wald

1 / 1

KROHNE

Attachment – Anlage – Annexe

List of material certificates – Liste der Materialzertifikate – Liste de certificat matèrie

Customer / Kunde / Client	:	Emmerthaler Apparatebau GmbH
Customer order / Bestellnummer / Commande client	:	BST2200106/ 0
Product / Produkt / Produit	:	KROHNE Schwebekörper-Durchflussmessgerät
Type / Typ / Type	:	H250/RR/M40/ESK-Ex
Production order / Produktionsauftrag / ordre de fabrication	:	011365313
Sales order / VK-Auftrag / Ordre de vente	:	010268543 / 10

Device / Gerät / Instrument	Serial no. / Serien Nr. / N° de série	Tag number / Tagnummer / Repère
011365313.001	D220000001138883	
011365313.002	D220000001138884	
011365313.003	D220000001138885	
011365313.004	D220000001138886	
011365313.005	D220000001138887	
011365313.006	D220000001138888	

KROHNE Messtechnik GmbH , Ludwig-Krohne-Str. 5, 47058 Duisburg, Germany, Tel.: +49 (0)203 301 0, Fax: +49 (0)203 301 10 389, www.krohne.com
Sitz der Gesellschaft: Duisburg HRB 6348
Geschäftsführer: Dr. Michael Deilmann, Lars Lemke, Ingo Wald

TÜV APPROVED MANUFACTURER ACC.TO PED 2014/68/EU AD 200-Merkblatt W0 Cert.№ 07/202/1326/WZ/0613/17

DNV·GL Certificate No: AMMM00002DA

Lloyd's Register Approved Manufacturer Cert.No: MD00/337 I/0003/4

TÜV SÜD ISO 14001 OHSAS 18001

TÜV SÜD ISO 9001

CENTRAVIS

The products were manufactured in controlled conditions of certified quality, environment and safety management systems / Die Produkte wurden in kontrollierter und zertifizierter Qualität, Umwelt- und Sicherheitsrichtlinien hergestellt / Продукция изготовлена в условиях сертифицированных систем менеджмента качества, окружающей среды и безопасности

INSPECTION CERTIFICATE ABNAHMEPRUFZEUGNIS СЕРТИФИКАТ КАЧЕСТВА	In accordance with / gemäß / В соответствии с	№	Rev / Rev. / Ред.	Page / Seite / Стр.
	EN 10204:2004 type 3.1	2020/181-7	00	1/4

Manufacturer / Herstellerwerk / Изготовитель

CENTRAVIS PRODUCTION UKRAINE PJSC
ЧАО СЕНТРАВИС ПРОДАКШН ЮКРЕЙН

Address / Adresse / Адрес

56, Trubnikov Avenue, Nikopol, Dnipropetrovsk Region, UKRAINE, 53201
tel/fax: +38 (0566) 69 11 60, e-mail: info@centravis.com

CUSTOMER REFERENCES / KUNDENREFERENZ / ИНФОРМАЦИЯ О ПОКУПАТЕЛЕ

Customer / Kunde / Заказчик	DAMSTAHL GMBH
Country of destination / Bestimmungsland / Страна назначения	Germany / Deutschland / Германия
Address / Adresse / Адрес	Raiffeisenstrasse 6-8, LANGENFELD 40764

Customer order / Auftragsnummer / Контракт	414.627/400
Item nr. / Pos.Nr / № позиции	551525
Production order# / Werksauftragsnummer / Заказ на производство	1080013104
Code of product / / Код продукта	CI076100360F708500

PRODUCT DESCRIPTION / PRODUKTBESCHREIBUNG / ИНФОРМАЦИЯ О ПРОДУКЦИИ

Seamless stainless tubes Nahtlose Edelstahlrohre Бесшовные нержавеющие трубы	Cold finished Kalt gefertigt Холоднодеформированные	Cold finished, heat treated, descaled - CFD Kalt gefertigt, wärmebehandelt, entzundert - CFD Термообработанные, травленные - CFD	Plain ends, square cut, deburred Glatte Enden, gerader Schnitt, entgratet Прямые концы, без заусенцев

Steel grade / Stahlgüte / Марка стали	**TP316 / S31600 / TP316L / S31603 / 1.4401 / X5CrNiMo 17-12-2 / 1.4404 / X2CrNiMo 17-12-2**
Steel type / Gefüge Art / Класс стали	Austenitic / Austenitisch / Аустенитная
Specification / Norm / Нормативная документация	**ASTM A312M-18a/ASME BPVC Section IIA SA-312Med 2019/EN 10216-5:2013**
Additional requirements / Zusätzliche Anforderungen / Доп. требования	AD2000 W0; AD2000 W2; AD2000 W10; PED 2014-68-EU; TRB 100; TRD 100 standard/TC2; KEINE EINBAUROHRE

Chemical composition, % / chemische Zusammensetzung / Массовая доля элементов в %

Heat # / Schmelze # / № плавки	Melting process / Erschmelzungsart / Метод выплавки	State / Probe / Проба	C	Mn	P	S	Si	Cr	Ni	Mo	N
			max 0.030	max 2.00	max 0.040	0.0050 - 0.0300	max 1.00	16.50 - 18.00	11.00 - 13.00	2.00 - 2.50	max 0.100
113117	IM + AOD	Ladle / Schöpfprobe / Ковшевая	0.023	1.77	0.034	0.0110	0.39	16.80	11.04	2.01	0.078
	-	Product / Produkt / Труба	0.023	1.28	0.034	0.0120	0.33	17.00	11.25	2.07	0.071
2062713	EAF	Ladle / Schöpfprobe / Ковшевая	0.026	1.32	0.037	0.0120	0.30	16.99	11.25	2.07	0.063
	-	Product / Produkt / Труба	0.024	1.76	0.032	0.0110	0.37	16.92	11.26	2.07	0.065

KROHNE KMT QHSE_Staff ID 19219
17.09.2021 61779

INSPECTION CERTIFICATE ABNAHMEPRUFZEUGNIS СЕРТИФИКАТ КАЧЕСТВА	In accordance with / gemäß / В соответствии с	№	Rev / Rev. / Ред.	Page / Seite / Стр.
	EN 10204.2004 type 3 1	2020/181-7	00	2/4

Heat # / Schmelze # / № плавки	Melting process / Erschmelzungsart / Метод выплавки	State / Probe / Проба	C	Mn	P	S	Si	Cr	Ni	Mo	N
			max 0.030	max 2.00	max 0.040	0.0050 - 0.0300	max 1.00	16.50 - 18 00	11.00 - 13.00	2 00 - 2.50	max 0.100
A08242	EAF + AOD	Ladle / Schopfprobe / Ковшевая	0 019	1.19	0 040	0.0080	0 34	16 92	11.30	2 06	0 026
	-	Product / Produkt / Труба	0 019	1 18	0 037	0 0080	0 31	16 95	11 33	2 05	0 025

SCOPE OF SUPPLY / UMFANG DER LIEFERUNG / ОБЪЕМ ПОСТАВКИ

Lot # / Los # / № партии	Bundle # / Bund # / № пакета	Heat # / Schmelze # / № плавки	Dimensions / Maßbereich / Размеры, mm / мм	pieces / Stücke / шт.	m / м	kg / кг
131007	131007	A08242	76 1 x 3 6 MW x 5000-6000	10	59 52	430
121823	121823	113117	76 1 x 3 6 MW x 5000-6000	5	28 3	206
121826	121826	2062713	76 1 x 3 6 MW x 5000-6000	5	28 7	208
131008	131008	A08242	76 1 x 3 6 MW x 5000-6000	9	53 73	388
123064	123064	A08242	76.1 x 3 6 MW x 5000-6000	10	59.9	426
131006	131006	A08242	76 1 x 3 6 MW x 5000-6000	10	58 74	422
127512	127512	A08242	76 1 x 3 6 MW x 5000-6000	10	59 9	424
127821	127821	A08242	76 1 x 3 6 MW x 5000-6000	10	59 44	430
130571	130571	A08242	76 1 x 3 6 MW x 5000-6000	10	59 9	430
130572	130572	A08242	76 1 x 3 6 MW x 5000-6000	8	47 92	340
131009	131009	A08242	76 1 x 3 6 MW x 5000-6000	4	22 89	168
130605	130605	A08242	76 1 x 3 6 MW x 5000-6000	10	59 9	428
130604	130604	A08242	76 1 x 3 6 MW x 5000-6000	7	41 84	296
131005	131005	A08242	76 1 x 3 6 MW x 5000-6000	10	59 52	434
131004	131004	A08242	76 1 x 3 6 MW x 5000-6000	10	59 62	430
TOTAL / INSGESAMT / ИТОГО				**128**	**759.82**	**5460**

Theoretical mass / Theoretische Masse / Теоретическая масса 6.559 kg/m

Marking / Markierung / Маркировка	CENTRAVIS ASTM A312M/ASME SA312M/EN 10216-5 TP316/S31600/TP316L/S31603/1.4401/X5CrNiMo 17-12-2/1 4404/X2CrNiMo 17-12-2 standard/TC2 MW/D3 CFD SML 76,1x3,6 mm ET NH Heat No Lot No . Знак контролера согл En 10216-5 - OTK (Э2)

TEST RESULTS / TEST ERGEBNISSE / РЕЗУЛЬТАТЫ ИСПЫТАНИЙ

Lot # / Los # / № партии	Test direction / Testrichtung / Направление испытаний - Longitudinal / langst / продольные at temperature / bei Temperatur / при температуре 20°C						
	Specimen # / Probe # / № образца	Tensile strength, Rm / Bruchfestigkeit Rm / Врем сопрот (σв), MPa / МПа	Proof strength, Rp0,2 / Streckgrenze Rp0 2 / Пред текуч (σt0.2), MPa / МПа	Proof strength, Rp1,0 / Streckgrenze Rp1 0 / Пред текуч (σt1 0), MPa / МПа	Elongation in 50 mm, A / Bruchdehnung / Удлинение на 50 мм, δ, % / %	Elongation, A min / Bruchdehnung / Относительное удл. (δ5), % / %	Hardness / Harteprufung / Испытание на твердость, HRB / HRB
		515 - 690	min 205	min 240	min 35	min 40	max 100
131007	1	608	310	341	45	50	80
	2	614	333	362	46	50	86
121823	1	679	511	534	40	45	94
	2	678	509	533	41	46	95
121826	1	670	500	519	39	43	93
	2	662	483	508	42	44	96
131008	1	608	310	341	45	50	80
	2	614	333	362	46	50	86
123064	1	593	303	331	47	50	82
	2	605	336	367	47	50	84

KROHNE KMT QHSE_Staff ID 19219
17 09 2021 61779

INSPECTION CERTIFICATE ABNAHMEPRUFZEUGNIS СЕРТИФИКАТ КАЧЕСТВА	In accordance with / gemäß / В соответствии с	№	Rev / Rev. / Ред.	Page / Seite / Стр.
	EN 10204 2004 type 3 1	2020/181-7	00	3/4

Lot # / Los # / № партии	Test direction / Testrichtung / Направление испытаний - Longitudinal / langst / продольные at temperature / bei Temperatur / при температуре 20°C						
	Specimen # / Probe # / № образца	Tensile strength, Rm / Bruchfestigkeit Rm / Врем сопрот (σв), MPa / МПа	Proof strength, Rp0,2 / Streckgrenze Rp0 2 / Пред текуч (σt0 2), MPa / МПа	Proof strength, Rp1,0 / Streckgrenze Rp1 0 / Пред текуч (σt1 0), MPa / МПа	Elongation in 50 mm, A / Bruchdehnung / Удлинение на 50 мм, δ, % / %	Elongation, A min / Bruchdehnung / Относительное удл (δ5), % / %	Hardness / Harteprufung / Испытание на твердость, HRB / HRB
		515 - 690	min 205	min 240	min 35	min 40	max 100
131006	1	608	310	341	45	50	80
	2	614	333	362	46	50	86
127512	1	608	308	344	49	53	81
	2	605	328	357	48	51	81
127821	1	608	310	341	45	50	80
	2	614	333	362	46	50	86
130571	1	608	308	344	49	53	81
	2	605	328	357	48	51	81
130572	1	608	308	344	49	53	81
	2	605	328	357	48	51	81
131009	1	608	310	341	45	50	80
	2	614	333	362	46	50	86
130605	1	593	303	331	47	50	82
	2	605	336	367	47	50	84
130604	1	593	303	331	47	50	82
	2	605	336	367	47	50	84
131005	1	608	310	341	45	50	80
	2	614	333	362	46	50	86
131004	1	608	310	341	45	50	80
	2	614	333	362	46	50	86

Test type / Prüfverfahren / Вид испытания	Requirements / Anforderungen / Требования	
100% Visual control / Visuelle Kontrolle / 100% Визуальный контроль		OK
100% Dimensional control / Maßkontrolle / 100% Контроль геометрических параметров	D3 OD (min 0 571 max 0 571 mm)/WT (min 0 max 0 72 mm)	OK
100% PMI / Spektroskopische Verwechslungsprufung / 100% Тест на несмешивание		OK
Flaring / Aufweitversuch / Раздача	EN ISO 8493 1998	OK
Flattening / Ringfaltversuch / Сплющивание	ASTM A999M-2018	OK
Ring expanding test / Ringaufdornversuch / Расширение кольца	EN ISO 8495 2013	OK
10% Ultrasonic test / Ultraschallprufung / 10% УЗК	EN ISO 10893-10 2011 Longitudinal imperfections and Transverse imperfections U2C/U2B	OK
100% Eddy Current test / Wirbelstromprufung / 100% ТВК	ASTM E 426-16/EN ISO 10893-1 2011	OK
Intergranular Corrosion Test / Prufung auf interkristalline Korrosion / МКК	ASTM A262-2015 Pract E, ISO 3651-2 1998 Pract A	OK
Straightness / Geradheit / Кривизна	1мм/1м	OK

KROHNE KMT QHSE_Staff ID 19219
17 09 2021 61779

INSPECTION CERTIFICATE ABNAHMEPRUFZEUGNIS СЕРТИФИКАТ КАЧЕСТВА	In accordance with / gemäß / В соответствии с	№	Rev / Rev. / Ред.	Page / Seite / Стр.
	EN 10204:2004 type 3.1	2020/181-7	00	4/4

Hardness values do not exceed 22 HRC acc to NACE MR0175-2009; NACE MR0103-2012; ISO 15156; NACE MR0175/ISO 15156-2015; ANSI/NACE/MR0103 17945:2015/Härtewerte überschreiten nicht 22 HRC gemäß NACE MR0175-2009; NACE MR0103-2012; ISO 15156; NACE MR0175/ISO 15156-2015; ANSI/NACE/MR0103 17945:2015/Значение твердости не превышает 22 HRC в соответствии с NACE MR0175-2009; NACE MR0103-2012; ISO 15156; NACE MR0175/ISO 15156-2015; ANSI/NACE/MR0103 17945:2015

The tubes were solution annealed at T=1070°C holding time min 2 Min/mm WT, then rapid cooled in water
Lösungsgeglüht bei T=1070°C Haltezeit min 2 Min/mm WT, im Wasser abgeschreckt worden
Трубы термообработаны при T=1070°C время выдержки min 2 мин/мм WT, с последующим резким охлаждением в воде

Confirmation with reference to Pressure Equipment Directive 2014/68/EU: Annex I, §4.3 - The works operates a quality management that has undergone a specific assessment for materials for pressure equipment and is certified by a competent body (TUV-Cert.# 07-202-1326 WZ-0613/17); Annex I, §7.5 – elongation after rupture at tensile test no less than 14% and a bending rupture energy at impact test no less than 27 J at 20ºC / Bestätigung in Bezug auf Druckgeräterichtlinie 2014/68/EU, Anhang I §4.3: Das Werk wendet ein Qualitätsmanagementsystem an, das in Bezug auf Werkstoffe für Druckgeräte einer spezifischen Bewertung unterzogen wurde und von einer zuständigen Stelle (TÜV-Zert.Nr. 07-202-1326 WZ-0613/17) zertifiziert ist; Anhang I, §7.5 - Bruchdehnung von mindestens 14% im Zugversuch und einer Kerbschlagarbeit von mindestens 27 j an einer iso-v-Kerbschlagprobe bei 20°C / Подтверждение согласно PED 2014/68/EU: Раздел I, § 4.3 - На производстве внедрена система управления качеством, прошедшая специальную проверку, согласно требований для материалов используемых для оборудования работающего под давлением, что подтвержденно уполномоченным компетентным органом (ТЮФ-Серт.№ 07-202-1326 WZ-0613/17); Раздел I, § 7.5 - удлинение не менее 14%, энергия удара не менее 27 Дж при 20ºC

The tubes when shipped are free from contamination by Mercury, Radium, Alpha Source, radioactive and low melting elements
Rohre sind frei von Quecksilber- und Radiumverunreinigung sowie frei von radioaktiver Verunreinigung
Трубы на момент погрузки не содержат Ртуть, Радий, Альфа частицы и легкоплавкие элементы

No weld repair / Reparaturen durch Schweissen sind nicht erlaubt / Трубы не ремонтировались сваркой

CENTRAVIS PRODUCTION UKRAINE PJSC declares that the product was manufactured, sampled, tested, and inspected in accordance with the prescribed specification, the supplementary requirements, and any other requirements designated in the purchase order and has been found to meet such requirements. / CENTRAVIS PRODUCTION UKRAINE bestätigt, dass die Produkte gemäß dem anwendbaren Datenblatt, Nebenforderungen, und jeglichen anderen im Einkaufsauftrag festgesetzten Anforderungen erzeugt, bemustert, geprüft und kontrolliert wurde. / ЧАО «СЕНТРАВИС ПРОДАКШН ЮКРЕЙН» гарантирует, что трубы изготовлены, испытаны и проверены в соответствии с установленной спецификацией, а также всеми другими требованиями, указанными в заказе, и являются отвечающими данным требованиям.

Inspector's stamp / Abnahmebeauftragter / Штамп инспектора

Date / Datum / Дата 04/05/2020

Э2 N. Kobyliashnyi

KROHNE KMT QHSE_Staff ID 19219
17.09.2021 61779

WAFFENSCHMIDT
Spezialfabrik für Edelstahlflansche

Ewald Waffenschmidt GmbH + Co KG Otto-Hahn-Str 6 D-57482 Wenden

Krohne Messtechnik GmbH
Ludwig-Krohne-Str. 5
47058 Duisburg

Unsere Kom -Nr.· Our Ident No: 42.104
Ihre Bestellung Nr.. Your Order No: 010208204
Bestelldatum: Your Order date: 22-12-21
Tag der Lieferung: Date of Delivery: 21-01-22
Werkstoff-Nr Material-No: 1.4401/1.4404 - A/SA182 F316/F316L

Abnahmeprüfzeugnis 3.1

nach EN 10 204

Inspection Certificate 3.1

according to EN 10 204

Zerreißversuch/Kerbschlagprobe ISO-V Tensile/Impact Test ISO-V

Pos Item No	Stückzahl place	Prüfgegenstand. Gesenkschmiedestücke, wärmebehandelt, allseitig gedreht Probenlage tangential / Test Subject Drop forging pieces, heat treated, surfaced allround Location of specimen tangential	Schmelze Nr / Heat No	Probe Nr. / Test No	0,2 Grenze 0,2 limitation N/mm²	1 % Dehngrenze 1 % proof stress N/mm²	Zug festigkeit Tensile Strenght N/mm²	Dehnung Elongation %	Einschnürung Reduction %	Kerbschlagarbeit Impact Strenght Joule
		Pruftemp.: RT falls nicht angegeben / Test temp.: RT if not specified								
			Anforderungen· Requirements		205	240	515-690	35	50	60
4	30	Flansche nach Zeichnung / Flanges DN 40 PN 40 (4007165001) EN-B1-40x77,1-40 nach FZ 4007165000 - (Sondervertrag 206112)	E210029	12626	447	489	664	43	69	200 114 210

Analyse / Analysis

Schmelze/Heat	C	Si	Mn	P	S	Cr	Mo	Ni	N	Ca	Ti
E210029	0,015	0,330	1,710	0,033	0,011	17,08	2,040	10,09	0,084	0,001	0,003

Anforderungen/Requirements: DIN EN 10222-5 06.17; AD2000-W2,-W9,-W10;
ASME BPVC Sect. II Part A Ed.2019, SA182M,
ASTM A182M 15 (Wertermittlung nach EN)
IK bestandig nach Prufung gem.:/IC resistant acc.testing to: DIN EN ISO 3651-2 Meth. A-T1, ASTM A262 Practice E.
Die Teile wurden nach dem Schmieden von Losungsglühtemp.(>1040°C) in Wasser abgeschreckt.
After forging the parts have been quenched rapidly in water from solutioning temp. (>1040°C).

MADE IN GERMANY. Vormaterial von / Prematerial from: Outokumpu (SE)
Vormaterial von westeuropaischem Hersteller / prematerial from western european manufacturer.
Analyse laut Stahlhersteller,Erschmelzungsart: Elektro. Analysis acc. to steel mill,steelmaking proc.: electric.
Besichtigung und Ausmessung ohne Beanstandung. Visual and dimensional inspection without complaints.
Werkstoffverwechslungsprufung: ohne Beanstandung. PMI-Test: without complaints.
Die Teile entsprechen den Anforderungen der/ The parts meet the requirements of 2011/65/EU RoHS II and REACH.
Frei von Quecksilber und radioaktiver Kontamination / Free from mercury and radioactive contamination
Unser System wurde uberpruft und bestatigt nach / Our System was surveyed and certified acc. to·
AD2000 - W0 / TRD 100, DIN EN ISO 9001·2015, KTA 1401 + AVS D100/50, DGRL/PED 2014/68/EU (97/23/EG)
Diese Bescheinigung wurde maschinell erstellt und ist ohne Unterschrift gultig.
This document has been produced electronically and is valid without a signature.

Jens Wagener
(Werkssachverstandiger/Expert) Datum/Date: 21.01.22

KROHNE KMT QHSE_Staff ID 19219
24 01 2022 62639

Stempel des Werkssachverständigen (B)
Stamp of Expert
Stempel des Lieferwerkes
Stamp of Supplier