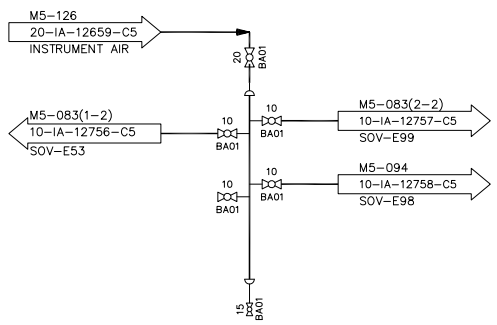

AREA 600 MANIFOLD #602 AT PLATFORM EL. 1300
(SP33)

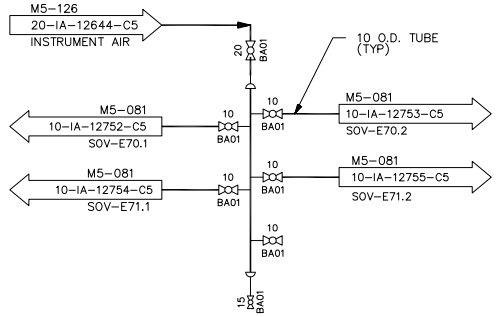

AREA 600 MANIFOLD #601 AT PLATFORM EL. 1300
(SP33)

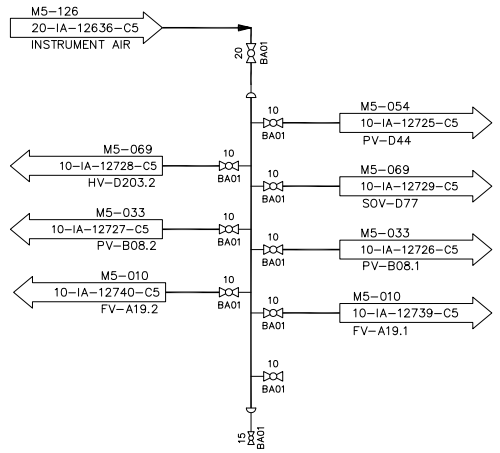

AREA 100 MANIFOLD #103 AT PLATFORM EL. 9900
(SP34)

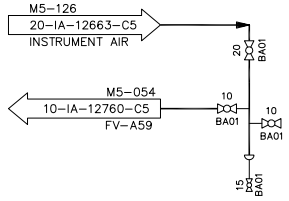

AREA 100 MANIFOLD #105 AT PLATFORM EL. 9900
(SP 33)

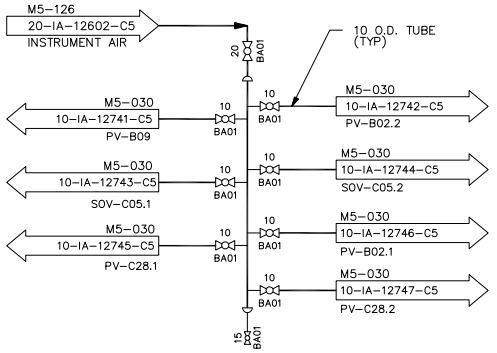

AREA 500 MANIFOLD #501 AT PLATFORM EL. 10000
(SP33)

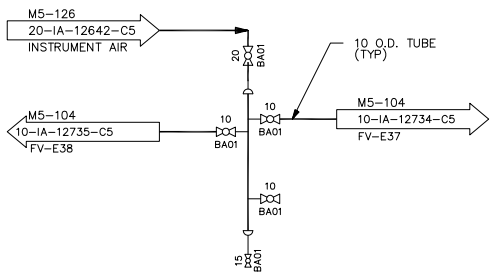

AREA 100 MANIFOLD #118 AT PLATFORM EL. 15000
(SP33)

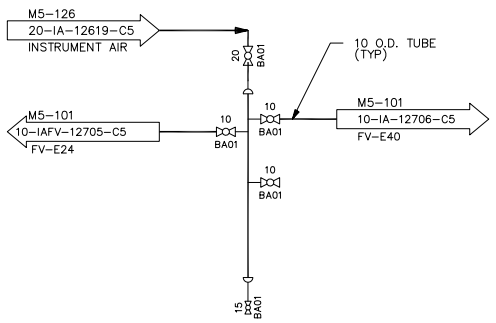

AREA 100 MANIFOLD #115 AT PLATFORM EL. 15000
(SP33)

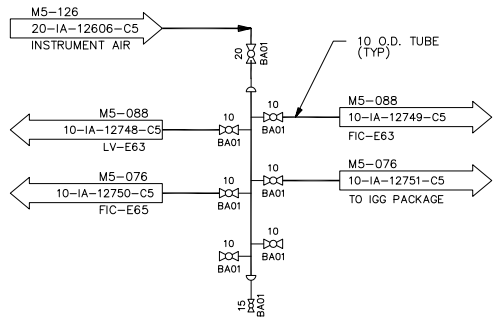

AREA 500 MANIFOLD #502 AT PLATFORM EL. 15300
(SP33)

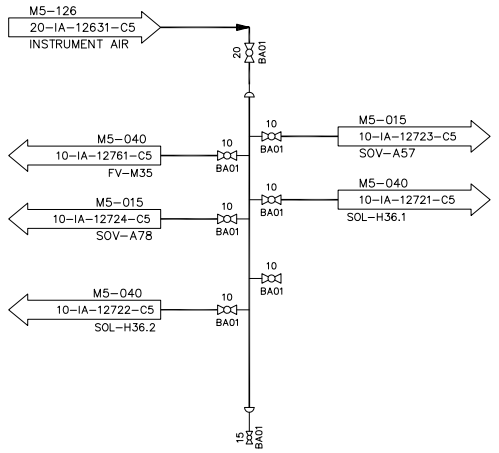

AREA 100 MANIFOLD #108 AT PLATFORM EL. 21410
(SP34)

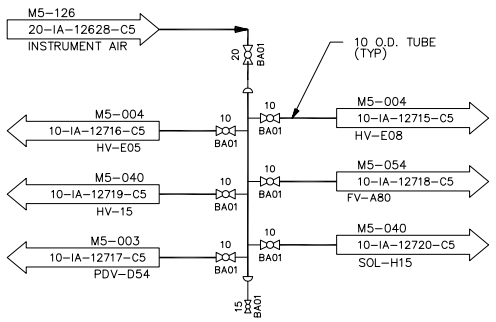

AREA 100 MANIFOLD #109 AT PLATFORM EL. 27545
(SP33)

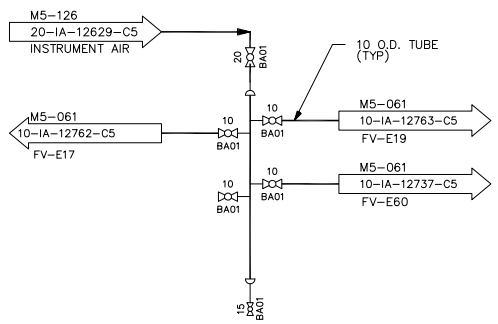

AREA 100 MANIFOLD #110 AT PLATFORM EL. 34800
(SP33)

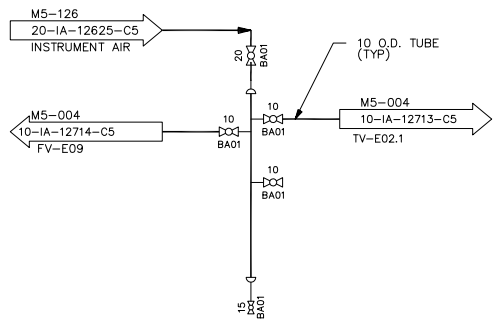

AREA 100 MANIFOLD #111 AT PLATFORM EL. 50400
(SP33)

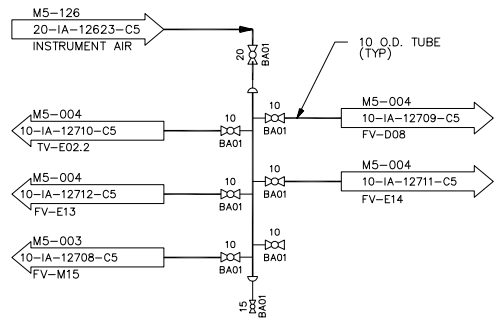

AREA 100 MANIFOLD #112 AT PLATFORM EL. 51800
(SP33)

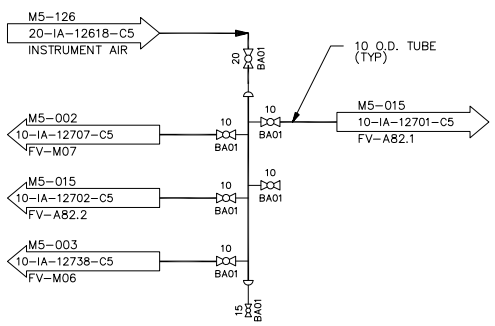

AREA 100 MANIFOLD #113 AT PLATFORM EL. 57500
(SP33)

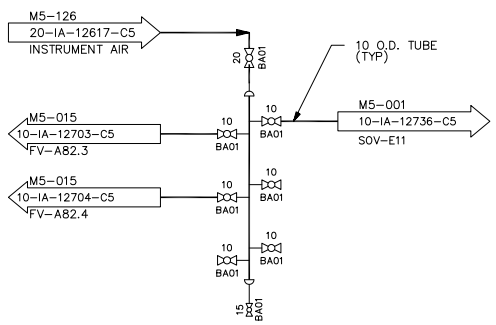

AREA 100 MANIFOLD #123 AT PLATFORM EL. 57500
(SP33)

REV.	DATE	DESCRIPTION	PURPOSE OF ISSUE	PREPARE	CHECK	APPROVE
Z	06/2019	AS BUILT	ASB	KHALILPOOR	SHAGHAGHI	MOHAMMAD ZADEH
5	01/2017	ISSUE FOR CONSTRUCTION	IFC	MMTE	SHAGHAGHI	MOHAMMAD ZADEH
4	10/2015	ISSUE FOR CONSTRUCTION	IFC	KHALILPOOR	PARVANI	KIOMARSI
3	03/2015	ISSUE FOR CONSTRUCTION	IFC	KHALILPOOR	PARVANI	KIOMARSI
2	09/2014	ISSUE FOR CONSTRUCTION	IFC	KHALILPOOR	PARVANI	KIOMARSI
1	06/2014	ISSUE FOR APPROVAL	IFA	KHALILPOOR	PARVANI	KIOMARSI

Project: KOWSAR GISD MEGA MODULE PROJECT

Client: شرکت توسعه آهن و فولاد گل گهر G.I.S.D.Co.

Contractor: شرکت مهندسی فن آوران معادن و فلزات MMTE MINES & METALS TECHNOLOGICAL ENGINEERING CO.

Client's Project	Project Code	Main Contractor	Area Code	Plant Group	Equipment Code	Document Type	Eng. Discipline	Serial No.
GISD	7-2	119	1002	7	AA	04	P	127

	SIGNATURE	DATE
DESIGNED	MMTE	01/2017
PREPARED	MMTE	01/2017
CHECKED	SHAGHAGHI	01/2017
APPROVED	MOHAMMAD ZADEH	01/2017

designation: PIPING & INSTRUMENTATION DIAGRAM
INSTRUMENT AIR DISTRIBUTION-USERS

drawing-No. KGMMPG00M5127

repl. for:

repl. by :

SCALE: AS SHOWN | REV.: Z | SIZE: A3 | SHEET: 1/1 | CONT. & PROJ. NO: 92/5499

Confidential:This document discloses proprietary information.
It may not be reproduced nor disclosed any person, nor used
for any purpose, except wiht the written permission of MMTE Co