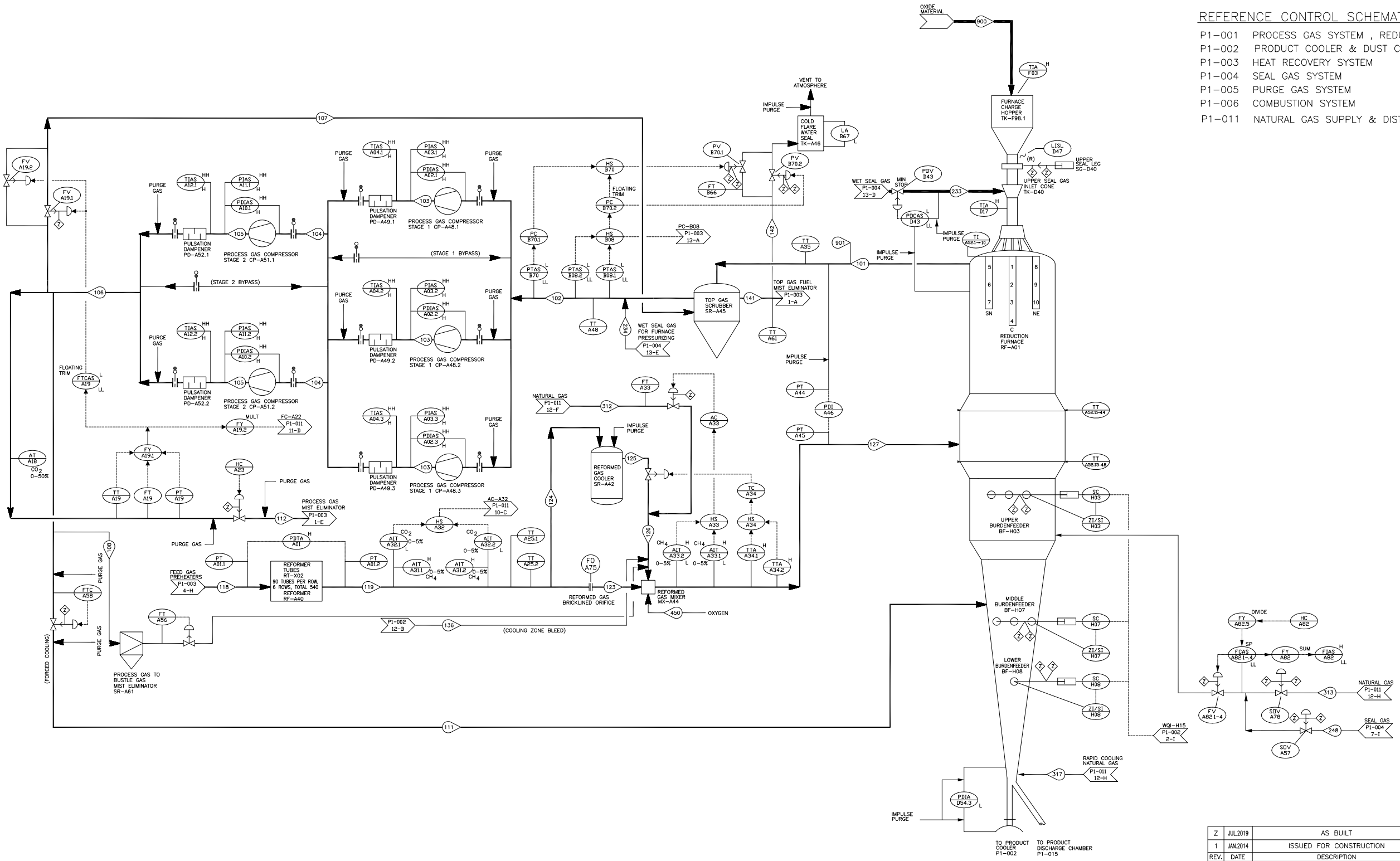

REFERENCE CONTROL SCHEMATICS

P1-001 PROCESS GAS SYSTEM , REDUCTION FURNACE
P1-002 PRODUCT COOLER & DUST COLLECTION
P1-003 HEAT RECOVERY SYSTEM
P1-004 SEAL GAS SYSTEM
P1-005 PURGE GAS SYSTEM
P1-006 COMBUSTION SYSTEM
P1-011 NATURAL GAS SUPPLY & DISTRIBUTION

REV.	DATE	DESCRIPTION	PURPOSE OF ISSUE	PREPARE	CHECK	APPROVE
Z	JUL.2019	AS BUILT	ASB	KHALILPOOR	SHAGHAGHI	MOHAMMAD ZADEH
1	JAN.2014	ISSUED FOR CONSTRUCTION	IFC	MMTE	MOHAMMAD ZADEH	KIOMARSI

Project: KOWSAR GISD MEGA MODULE PROJECT

Client: شرکت توسعه آهن و فولاد گل گهر G.I.S.D.Co.

Contractor: شرکت مهندسی فلزات و معادن MMTE MINES & METALS TECHNOLOGICAL ENGINEERING CO.

Client's Project	Project Code	Main Contractor	Area Code	Plant Group	Equipment Code	Document Type	Eng. Discipline	Serial No.
GISD	7-2	119	1003	7	AA	04	P	001

	SIGNATURE	DATE
DESIGNED	MMTE	JAN.2014
PREPARED	MMTE	JAN.2014
CHECKED	M.MMZ	JAN.2014
APPROVED	KIOMARSI	JAN.2014

designation: PROCESS GAS SYSTEM REDUCTION FURNACE

drawing-No. KGMMPF00P1001

repl. for: repl. by :

SCALE: REV.: Z

SIZE: A3 SHEET: 1/1

CONT. & PROJ. NO. 92/5499

Confidential:This document discloses proprietary information. It may not be reproduced nor disclosed any person, nor used for any purpose, except wiht the written permission of MMTE Co