REFERENCE DRAWINGS		
NO.	DRAWING NO.	TITLE
1	KGMMMR40V2020	PURGE GAS TANK (A/B/C) ASSEMBLY (SHEET 1/2)
2	KGMMMR40V2021	PURGE GAS TANK (A/B/C) ASSEMBLY (SHEET 2/2)
3	–	–

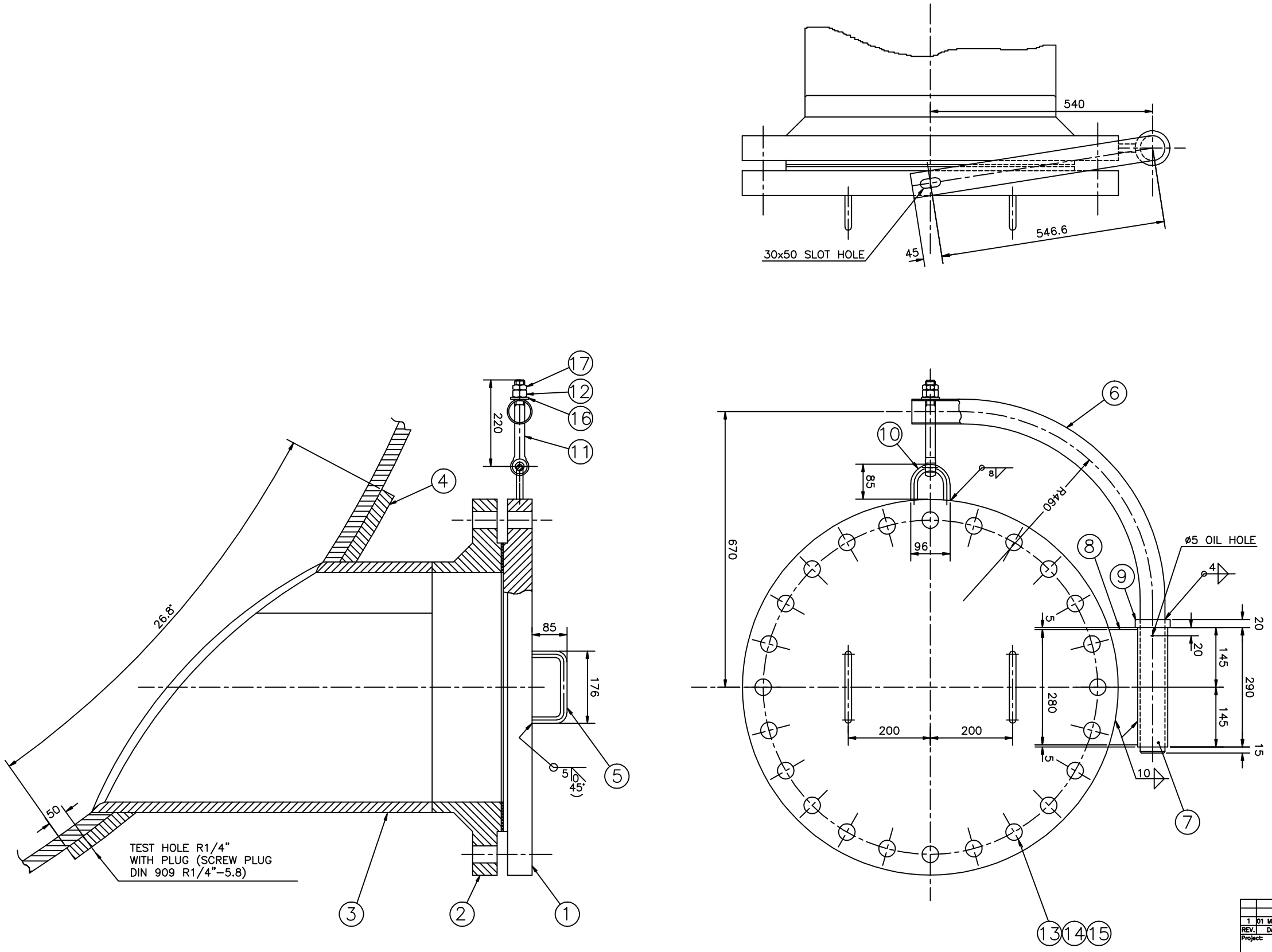

TOTAL WEIGHT: 1117.52 Kg

ITEM	DESIGNATION	MATERIAL	NO. REQ.D	SPARE	KG.	STD. NO.	REMARKS
17	HEX. NUT	5	1		0.071	DIN 439	M24
16	WASHER	St	1		0.032	DIN 125	A25
15	GASKET	V#1500 OR EQUIVALANT	1		1.5		t4.5xø610xø775
14	HEX. NUT	A194–2H	24		0.875		1 1/2"–8 UNC
13	HEX. BOLT	A193–B7	24		1.83		1 1/2"–8 UNCx205
12	HEX. NUT	5	1		0.106	DIN 934	M24
11	EYE BOLT	5.6	1		0.868	DIN 444	B M24x220
10	BRACKET ø16	A36	1		0.34		
9	STOPPER	A36	1		0.433		PL20xø61xø85
8	PL 20x68x280	A36	1		3.0		
7	SLEEVE	A53 Gr.A	1		2.41		PIPE 2 1/2 "SCH40
6	DAVIT ARM	A53 Gr.A	1		16.43		PIPE XX–Stg. 2"
5	HANDLE ø16	A36	2		0.55		
4	REINFORCEMENT	A516 Gr.70	1		204.4		PL 34xø1160
3	600A– SCH 60	A516 Gr.70	1		146.9		
2	FLANGE	A105	1		347.2	ANSI B16.5	300LB–600A WN.RF.
1	BLIND FLANGE	A105	1		327.7	ANSI B16.5	300LB–600A B.RF.

REV.	DATE	DESCRIPTION	PURPOSE OF ISSUE	PREPARE	CHECK	APPROVE
1	01 Mar. 14	–	ISSUED FOR CONSTRUCTION	MUSAVI	FARSHIDMAND	M.A.EHYAEI

Project: KOUSAR GISD MEGA MODULE PROJECT

Client: شرکت توسعه آهن و فولاد گل گهر G.I.S.D.Co.

Contractor: شرکت مهندسی فن آور معادن و فلزات MINES & METALS TECHNOLOGICAL ENGINEERING CO. MMTE

Client's Project	Project Code	Main Contractor	Area Code	Plant Group	Equipment Code	Document Type	Eng. Discipline	Serial No.
GISD	7–2	119	1008	7	TA	04	M	006

	SIGNATURE	DATE
DESIGNED	MMTE	Mar. 2014
PREPARED	MUSAVI	Mar. 2014
CHECKED	FARSHIDMAND	Mar. 2014
APPROVED	M.A.EHYAEI	Mar. 2014

designation: PURGE GAS TANK (A/B/C) MANHOLE DETAIL

drawing–No. KGMM M R 40 V2 024

repl. for: repl. by :

SCALE: 1:5 REV.: 1 SIZE: A1 SHEET: CONT. & PROJ. NO: ----

UNLESS OTHERWISE SPECIFIED	
SURFACE FINISH DIN 140	3RD ANGLE PROJECTION
TOLERANCES & FITS: GENERAL TOLERANCES DIN ISO 2768–1&2	BREAK ALL MACHINED SHARP EDGES BY 1x45°
WELDED CONSTRUCTION ACC. TO "AWS"	ALL DIM IN MILLIMETER

Obsolete MMTE document: disclosure proprietary information. It may not be reproduced nor disclosed any person, nor used for any purpose, except with the written permission of MMTE Co