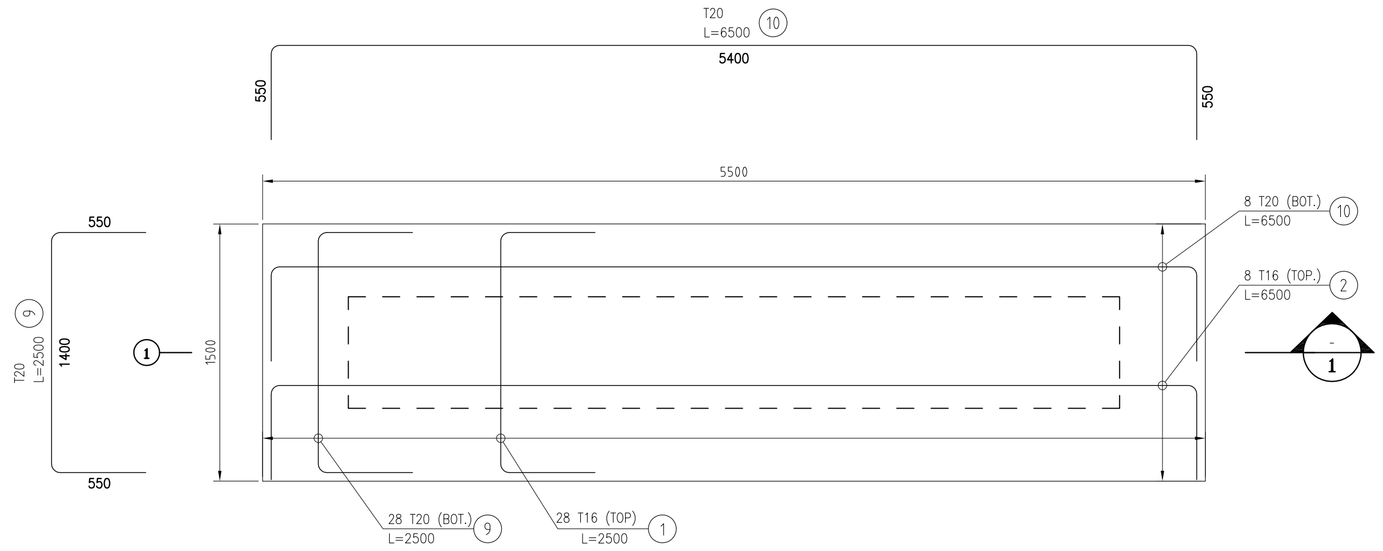


## FOUNDATION REINFORCEMENT 'F.1, (6 PCS.)

Sc: 1/25

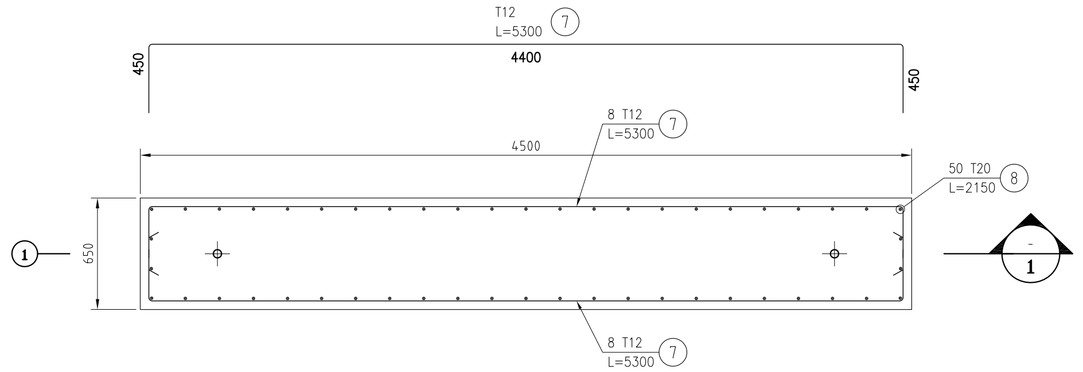


## PEDESTAL 'PED.1, (6 PCS.)

Sc: 1/25

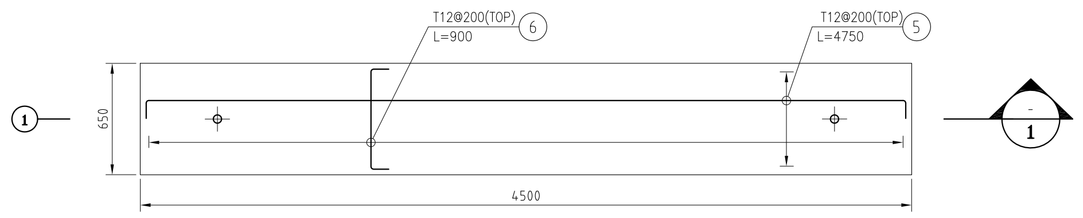


## VIEW

1/25 2

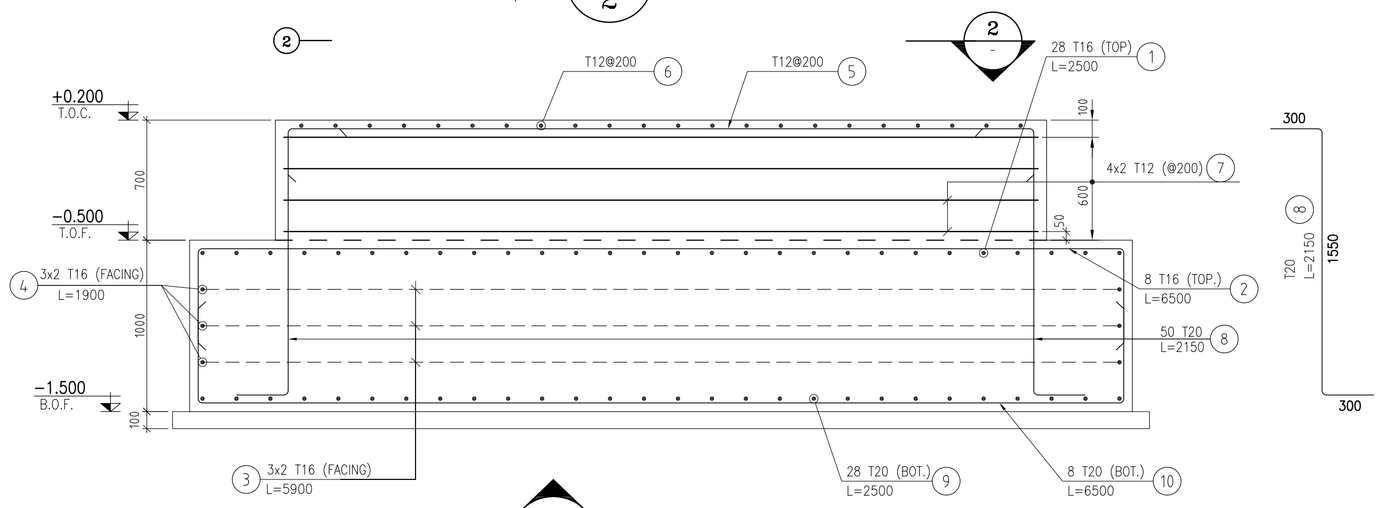


## SECTION

1/25 1

| Pos | Spec. | Shape | L | No. | T12 | T16 | T20 |
|---|---|---|---|---|---|---|---|
| 1 | T16 | 550 1400 550 | 2.5 | 168 | | 420 | |
| 2 | T16 | 550 5400 550 | 6.5 | 48 | | 312 | |
| 3 | T16 | 250 5400 250 | 5.9 | 36 | | 212.4 | |
| 4 | T16 | 250 1400 250 | 1.9 | 36 | | 68.4 | |
| 5 | T12 | 200 4350 200 | 4.75 | 24 | 114 | | |
| 6 | T12 | 200 500 200 | 0.9 | 132 | 118.8 | | |
| 7 | T12 | 450 4400 450 | 5.3 | 48 | 254.4 | | |
| 8 | T20 | 300 1550 300 | 2.15 | 300 | | | 645 |
| 9 | T20 | 550 1400 550 | 2.5 | 168 | | | 420 |
| 10 | T20 | 550 5400 550 | 6.5 | 48 | | | 312 |
| TOTAL LENGTH (m) | | | | | 487.2 | 1012.8 | 1377 |
| UNIT WEIGHT (Kg) | | | | | 0.888 | 1.578 | 2.466 |
| WEIGHT (Kg) | | | | | 433 | 1598 | 3396 |
| GRAND TOTAL (Kg) | | | | | 5427 Kg. | | |

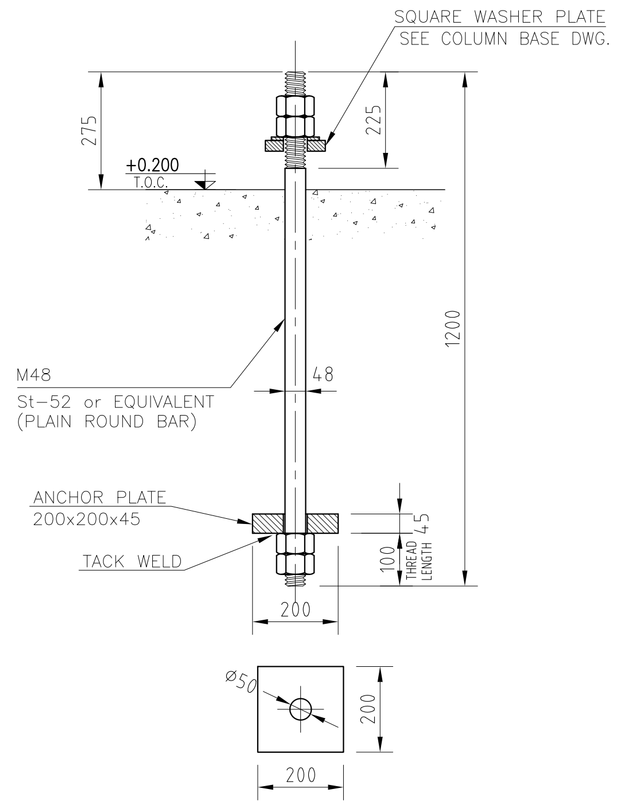


## M48

Sc: 1/10 (12 PCS.)

| REV. | DATE | DESCRIPTION | PURPOSE OF ISSUE | PREPARE | CHECK | APPROVE |
|---|---|---|---|---|---|---|
| Z | MAY.2019 | AS BUILT | ASB | B.MAHOOTI | T.AHMADI | F.SHAHBANDEH |
| 2 | JAN.2014 | ISSUED FOR CONSTRAUCTION | IFC | S.RAZAVI | M.KARAMI | A.R.HAMIDIAN |
| 1 | NOV.2013 | ISSUED FOR APPROVAL | IFA | T.A | M.H | A.R.H |

Project: KOUSAR GISD MEGA MODULE PROJECT

Client: شرکت توسعه آهن و فولاد گل گهر G.I.S.D.Co.

Contractor: شرکت مهندسی فن آور معادن و فلزات MINES & METALS TECHNOLOGICAL ENGINEERING CO. MMTE

| Client's Project | Project Code | Main Contractor | Area Code | Plant Group | Equipment Code | Document Type | Eng. Discipline | Serial No. |
|---|---|---|---|---|---|---|---|---|
| GISD | 7-2 | 119 | 1001 | 7 | TA | 04 | C | 041 |

| | SIGNATURE | DATE |
|---|---|---|
| DESIGNED | CIVIL-MMTE | NOV.2013 |
| PREPARED | T.AHMADI | NOV.2013 |
| CHECKED | M.HOJJATI | NOV.2013 |
| APPROVED | A.R.HAMIDIAN | NOV.2013 |

designation: CIVIL DRAWING CORE AREA PURGE GAS TANK FOUNDATION & PED. REINFORCEMENT & ANCHOR BOLT DETAILS

drawing-No. KGMM CB 36 C2 041

repl. for: repl. by:

SCALE: AS SHOWN REV.: Z SIZE: A1 SHEET: 1/1

CONT. & PROJ. NO. 92-5499

Confidential:This document discloses proprietary information. It may not be reproduced nor disclosed any person, nor used for any purpose, except wiht the written permission of MMTE Co