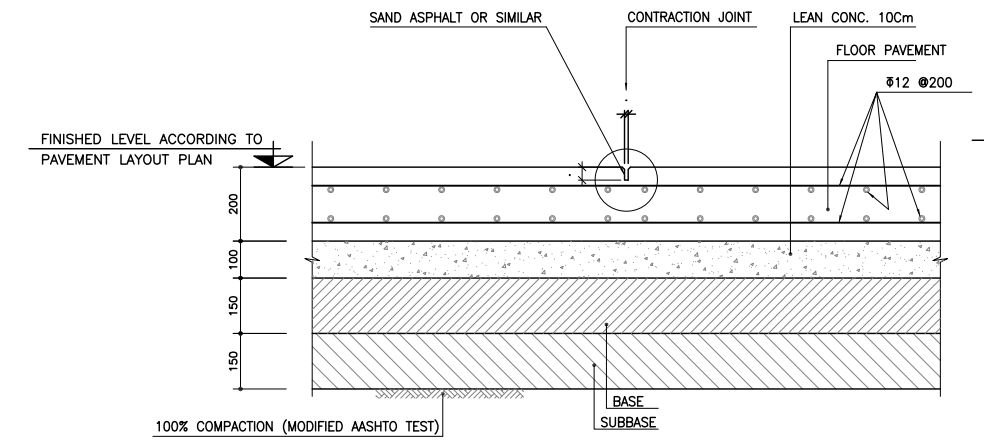

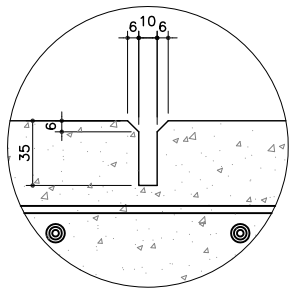

CONTRACTION JOINT "C.T.J"

SC.1:10 EVERY 5M

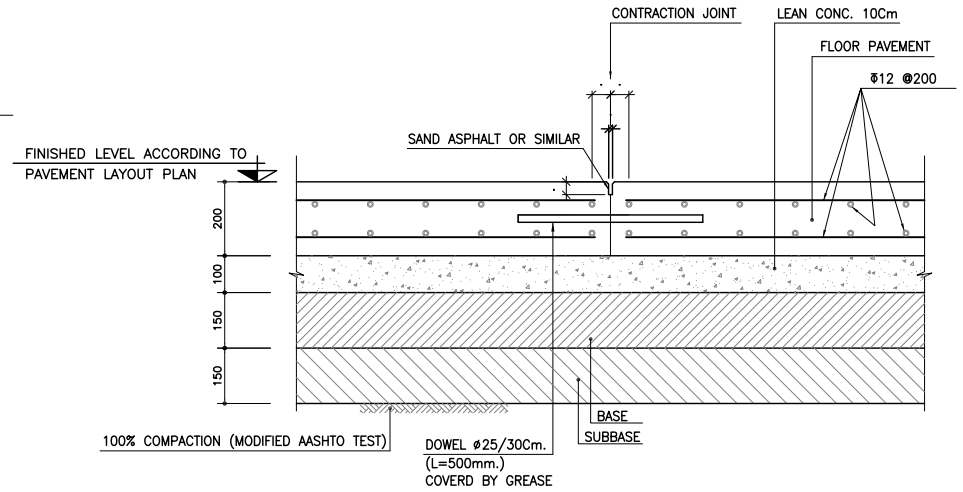

CONSTRUCTION JOINT "C.J"

SC.1:10

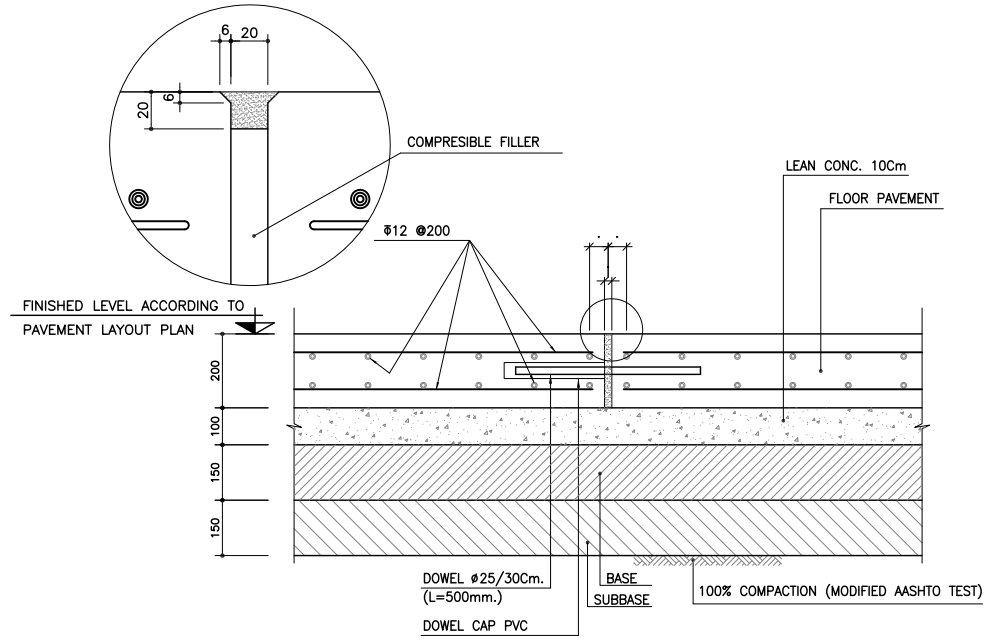

EXPANSION JOINT "EX.J"

SC.1:10 AS SHOWN IN PAVING PLAN

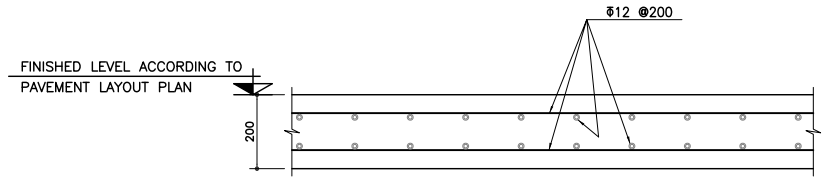

TYPICAL REINFORCEMENT DETAIL NO.1

FOR THE AREAS DISTANCE MORE THAN 500mm
SC.1:10

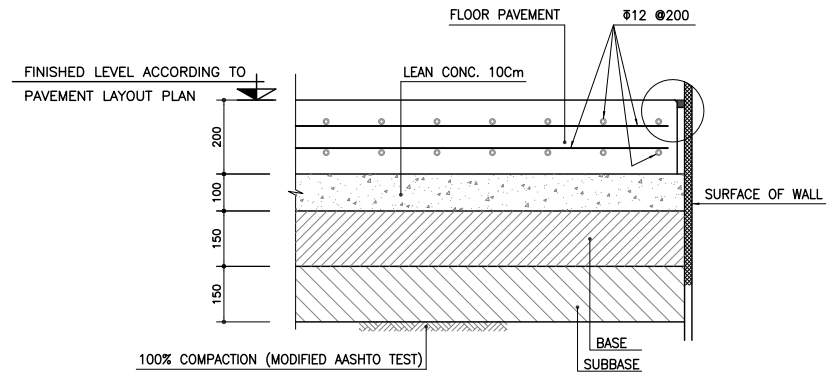

ISOLATION JOINT "IJ"

SC.1:10 AROUND ALL PEDESTALS OR TRENCH

BASE GRADING					
SIEVE SIZE	PERCENTAGE BY WEIGHT PASSING				
	TYPE 1	TYPE 2	TYPE 3	TYPE 4	TYPE 5
50(mm)	100	100	100	–	–
37.5(mm)	95~100	–	–	100	–
25(mm)	–	–	75~95	70~100	100
19(mm)	70~92	–	–	60~90	–
9.5(mm)	50~70	30~65	40~75	45~75	50~85
4.75(mm)	35~55	25~55	30~60	30~60	35~65
2(mm)	–	15~40	20~45	20~50	25~50
600(μm)	12~25	–	–	–	–
425(μm)	–	8~20	15~30	10~30	15~30
75(μm)	0~8	2~8	2~8	2~8	2~8

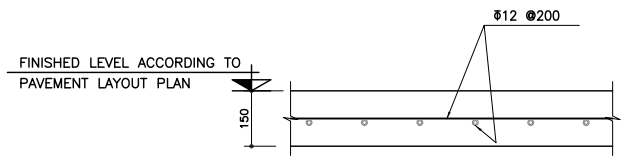

TYPICAL REINFORCEMENT DETAIL NO.2

FOR THE AREAS DISTANCE LESS THAN 500mm
SC.1:10

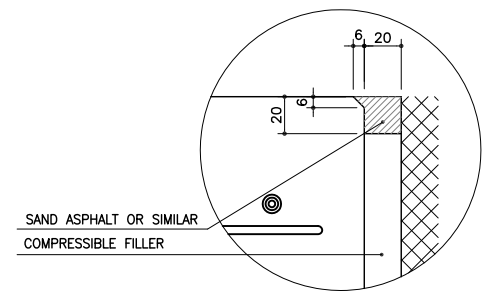

SUBBASE GRADING					
SIEVE SIZE	PERCENTAGE BY WEIGHT PASSING				
	TYPE 1	TYPE 2	TYPE 3	TYPE 4	TYPE 5
50(mm)	100	100	100	–	–
37.5(mm)	–	90~100	–	100	–
25(mm)	–	75~90	75~95	90~100	100
9.5(mm)	30~65	40~70	40~75	55~80	50~85
4.75(mm)	25~55	30~60	30~60	40~60	35~65
2(mm)	15~40	20~50	20~45	28~48	25~50
425(μm)	8~20	10~30	15~30	14~28	15~30
75(μm)	2~8	0~12	5~12	5~12	5~12

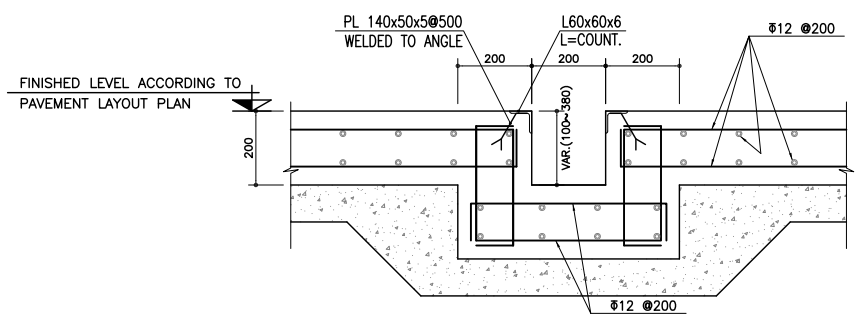

TYPICAL REINFORCEMENT DETAIL NO.3

SC.1:10 DRAINAGE PIT

REV.	DATE	DESCRIPTION	PURPOSE OF ISSUE	PREPARE	CHECK	APPROVE
2	JUN.2016	ISSUED FOR CONSTRUCTION	IFC	BAKHSHI	SHAHRAEINI	ARNAVAZ
1	APR.2016	ISSUED FOR APPROVAL	IFA	BAKHSHI	SHAHRAEINI	ARNAVAZ

Project:

KOWSAR GISD MEGA MODULE PROJECT

Contractor

شرکت توسعه آهن و فولاد گل گهر G.I.S.D.Co.

شرکت مهندسی فن آور معادن و فلزات MMTE MINES & METALS TECHNOLOGICAL ENGINEERING CO.

Project	Project Code	Main Contractor	Area Code	Plant Group	Equipment Code	Document Type	Eng. Discipline	Serial No.
GISD	7–2	119	1002	7	AA	04	G	106

	SIGNATURE	DATE
DESIGNED	BAKHSHI	APR.2016
PREPARED	BAKHSHI	APR.2016
CHECKED	SHAHRAEINI	APR.2016
APPROVED	ARNAVAZ	APR.2016

designation: CIVIL DRAWING PAVING DETAILS

drawing–No. KGMM CG 07 C0 006

repl. for: repl. by :

SCALE: AS SHOWN REV.: 02

SIZE: A1 SHEET: 1/1

CONT. & PROJ. NO ----

Confidential:This document discloses proprietary information.
It may not be reproduced nor disclosed any person, nor used
for any purpose, except wiht the written permission of MMTE Co