DOCUMENT TYPE:

CALCULATION REPORT

DOCUMENT TITLE:

AREA 350 PIPE RACK STEEL STRUCTURE CALCULATION BOOK

REV.	DATE	PRE.	CHK.	APP.	Client	Description	Purpose of Issue
4							
3							
2	OCT.2015	A.Baniassadi	M.Hasanzadeh	S.Arnavaz	GISD	IFC	Issud For Construction
1	SEP.2015	A.Baniassadi	M.Hasanzadeh	S.Arnavaz	GISD	IFA	Issud For Approval
		CONTRACTOR					

PROJECT TITLE :

KOWSAR GISD MEGA MODULE PROJECT

Client :

شرکت توسعه آهن و فولاد گل گهر
G.I.S.D.Co.

contractor:

MINES & METALS TECHNOLOGICAL ENGINEERING CO..

Client 'S Project	Project Code	Main Contractor	Area Code	Plant Group	Equipment Code	Document Type	Eng. Discipline	Serial No.
GISD	7-2	119	1003	7	AA	15	S	001

	NAME	DATE	MMTE No.	SHEET	REV.
PREPARED	A.BANIASADI	SEP.2015	KGMM SF 13 C4 001	42	02
CHECKED	M.HASANZADEH	SEP.2015			
APPROVED	S.ARNAVAZ	SEP.2015	Contract No. : ------		

This document and the information disclosed are the property of MMTE and are not to be used to furnish any information for making of documents or apparatus except where approved by written agreement.

REVISION RECORD SHEET

Page	Rev. 01	Rev. 02	Rev. 03			
01	X					
02	X					
03	X					
04	X					
05	X					
06	X					
07	X					
08	X					
09	X					
10	X					
11	X					
12	X					
13	X					
14	X					
15	X					
16	X					
17	X					
18	X					
19	X					
20	X					
21	X					
22	X					
23	X					
24	X					
25	X					
26	X					
27	X					
28	X					
29	X					
30	X					
31	X					
32	X					
33	X					
34	X					
35	X					
36	X					
37	X					
38	X					
39	X					
40	X					
41	X					
42	X					
43						
44						
45						
46						
47						
48						
49						
50						

Page	Rev. 01	Rev. 02	Rev. 03			
51						
52						
53						
54						
55						
56						
57						
58						
59						
60						
61						
62						
63						
64						
65						
66						
67						
68						
69						
70						
71						
72						
73						
74						
75						
76						
77						
78						
79						
80						
81						
82						
83						
84						
85						
86						
87						
88						
89						
90						
91						
92						
93						
94						
95						
96						
97						
98						
99						
100						

Note: This Table is use for External Comments.

Table of Contents

1. INTRODUCTION 5

2. GENERAL VIEW 5

3. STRUCTURAL SYSTEM 8

3.1. FOUNDATION 8

3.2. SUPER STRUCTURE 8

3.2.1. VERTICAL *LOADS* 8

3.2.2. LATERAL LOADS 8

3.3. FLOORS 8

4. LOADS 8

4.1. DEAD LOAD 8

4.2. SUPER DEAD LOAD(SUPD100) 8

4.3. LIVE LOAD (LIVE20) 9

4.4. VESSELS AND EQUIPMENT LOAD 9

4.5. SEISMIC LOAD: 9

4.6. WIND LOAD: 12

4.7. THERMAL LOAD 13

4.8. ERECTION AND MAINTENANCE LOAD 13

5. LOAD CASES AND LOAD COMBINATIONS 13

5.1. LAOD CASES 13

5.2. LOAD COMBINATIONS 14

6. ANALYSIS & DESIGN 20

6.1. DYNAMIC ANALYSIS 20

6.2. DEFORMATIONS 21

6.3. INTERNAL FORCES 21

6.4. DESIGN RATIO 21

7. APPENDIX 22

APPENDIX A: EQUIPMENTS LOAD 23

APPENDIX B: CONNECTION 38

Table of figures

Figure 1: Location in Plant Site 6
Figure 2: 3D View A 7
Figure 3: 3D View B 7
Figure 4: Vertical earthquake load case (EZ) 12
Figure 5: General loading notes and loading at EL4260 23
Figure 6: loading plan at elevation 4200 24
Figure 7: loading plan at elevation 5600 25
Figure 8: loading plan at elevation 6100 26
Figure 9: loading plan at elevation 9600 27
Figure 10: loading plan at elevation 12800 28
Figure 11: loading plan at elevation 14200 29
Figure 12: Platform at elevation 4200 30
Figure 13: Platform at elevation 5600 31
Figure 14: Platform at elevation 9600 part 1 32
Figure 15: Platform at elevation 9600 part 2 33
Figure 16: Platform at elevation 14200 34
Figure 17: WTP pipe bridge plan 35
Figure 18: WTP pipe bridge section 36
Figure 19: Mist eliminator general arrangement and detail drawings 37

1. INTRODUCTION

This document contains ***Calculation Report*** for analysis and design of ***Pipe Racks structure***.

Overall structural systems

- ✓ Foundation — Reinforced Concrete
- ✓ Grade slab — Reinforced Concrete
- ✓ Structure — Steel Structure above GL+ (0.30) m

It is worthy to mention that in order to design the steel structure, the base of the structure is considered to be fixed (without foundation). In such condition we will have a more conservative design. And, in order to design the foundation of the structure, a structure with its foundation is considered.

2. GENERAL VIEW

Location of structure in plant site is shown in Figure 1.

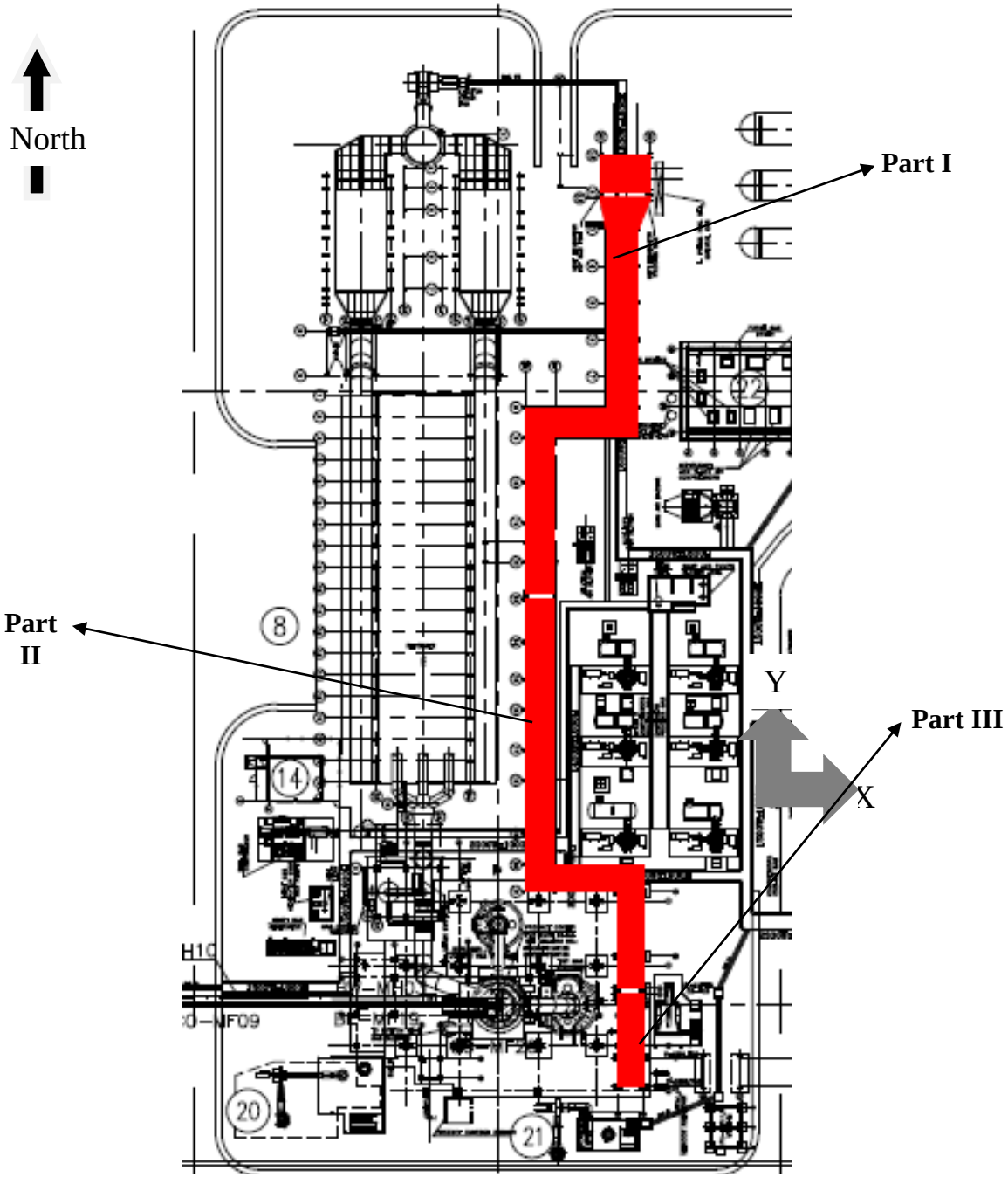

Figure 1: Location in Plant Site

In Figure 2 and Figure 3, three dimensional views of the structure are shown:

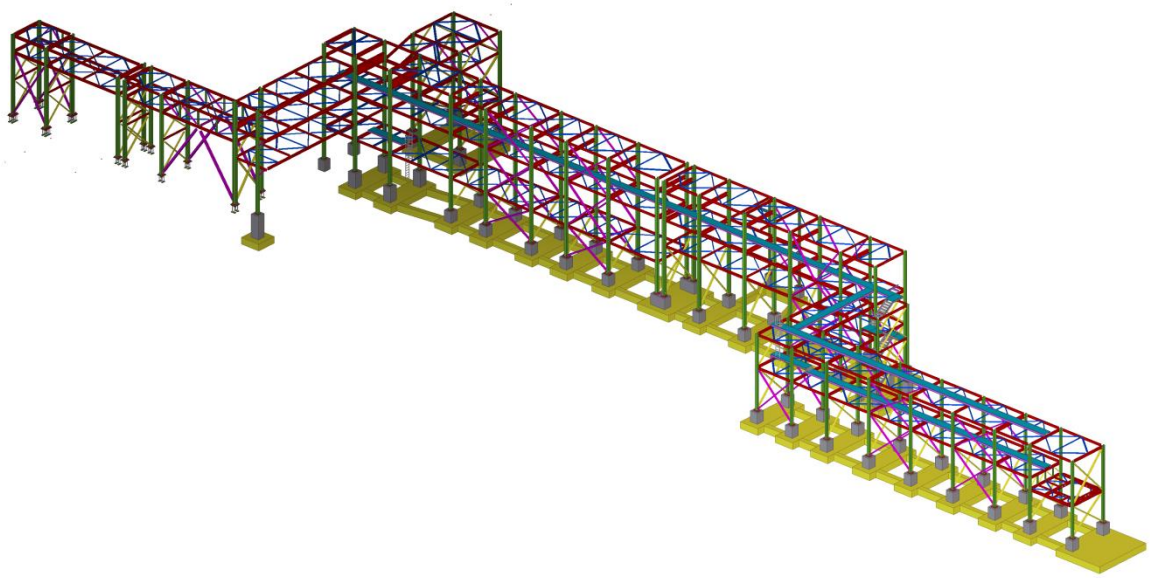

Figure 2: 3D View A

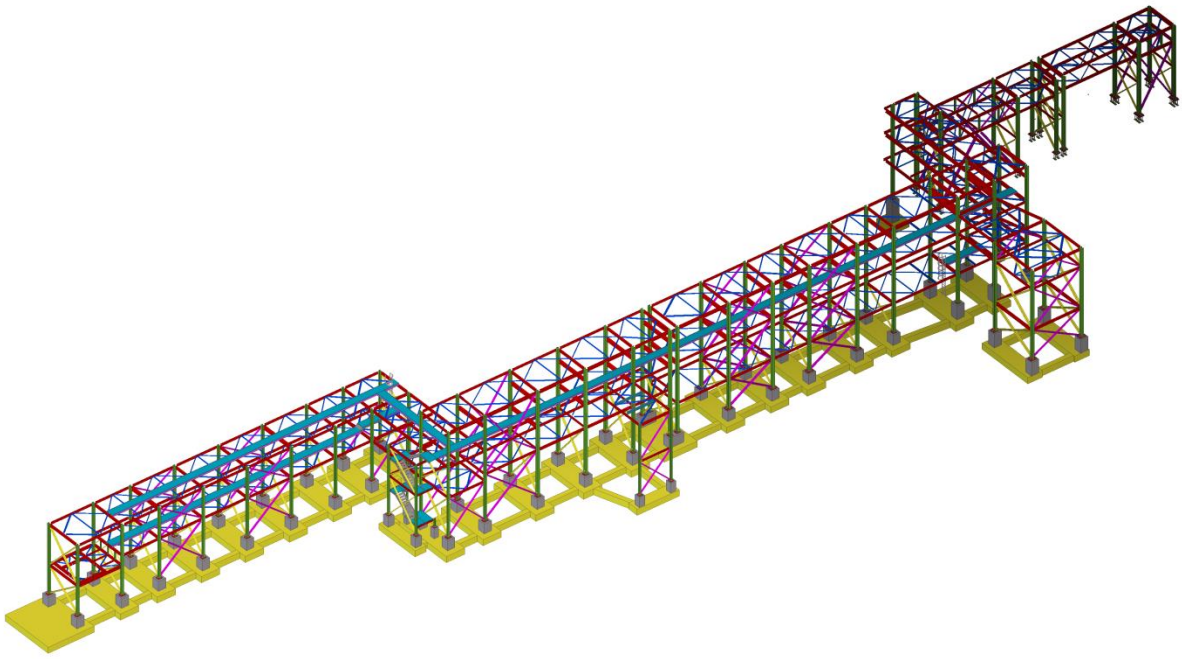

Figure 3: 3D View B

3. STRUCTURAL SYSTEM

3.1. FOUNDATION

Foundation structural system is a 0.8 m thick reinforced concrete strip foundation. The top levels of the foundation are -1, -1.5 and -2.5 m under the finished ground level. It is worthy to mention that there are some trenches which define some top levels.

3.2. SUPER STRUCTURE

3.2.1. VERTICAL LOADS

Vertical loads are supported by Steel Frames.

3.2.2. LATERAL LOADS

Lateral loads are supported by ordinary concentrically braced steel frame in both longitudinal and transverse directions.

3.3. FLOORS

The main levels of this structure are 4200, 5600, 6100, 9600, 8000, 10500 and 14200

4. LOADS

4.1. DEAD LOAD

Weight of structural components is included in analytical model based on specific weight of 25KN/m^3 for concrete and 78.5KN/m^3 for steel parts.

4.2. SUPER DEAD LOAD(SUPD100)

Super dead loads are considered in platform location. Load value equal to $75\frac{kg}{m^2}$ is considered for dead load of grating and supporting beams

4.3. LIVE LOAD (LIVE20)

According to MMTE's single line load diagram, Platform live load is considered as 250kg/m2 in the model. 20% of live load is considered as a mass in earthquake.

4.4. VESSELS AND EQUIPMENT LOAD

Location and amount of each equipment or pipe point loads for individual cases are shown on drawings in appendix A. Pipe loads are divided to three categories:

- Pipe weight(EMDL00) pipe weight is considered as dead load with zero mass Masses of pipes are applied as joint masses separately.
- Operation Load(live00) operation loads from pipe are considered in this load case

-Seismic Loads (EMEXL0 and EMEYL0). these loads are MMTE's seismic loads for piping on support.

4.5. SEISMIC LOAD:

Earthquake loads are evaluated as mentioned in General Design Criteria regarding the following considerations:

Structure is analyzed under static earthquake equivalent load which is obtained ASCE7-10. Seismic coefficients for non-building structures similar to buildings are mentioned in the table 15.4.1. For ordinary steel concentrically braced R is equal to 3.25. As reported R in that ASCE is for LRFD design, for using Iranian load combinations (ASD) it should be multiplied by 1.4.So design R in two directions are assumed to be 4.5.

Important Factor is assumed equal to **1.**

Dynamic analysis of the structure will be performed in order to evaluate the seismic effect on structural components.

Mass Sources are evaluated regarding the following considerations:

Mass Source*	
Load**	Multiplier
Supd100	1.0
Live20	0.2

*** Mass Definition:** From Element and Additional Masses and Loads

** Masses of pipes are applied as joint masses.

Evaluation of Seismic Load:

According to GENERAL DEISIGN CRITERIA:
Base acceleration factor A= 0.3g
Soil profile is Type II
Importance Factor I = 1.0
Structural Behavior Factor R=4.5
T0=0.1 Sec, Ts=0.5 Sec, S=1.5

Two seismic evaluations are assumed:

CASE 1: based on weight of steel structure +loads of equipment.
CASE 2: based on weight of steel structure + MMTE's seismic loads.
It is worthy to mention that because in all parts "case 1" dominates the design forces. Therefore, in this report the design procedure according to this case 1 is considered.

Part I: Between axis 1.5 to 13

Part II: Between axis 13 to 23

seismic equivalent load calculation

structura height $H := 14.2$ m

seismic base acceleration $A := 0.3$

important factor $I := 1$

$Rx := 4.5$ $Ry := 4.5$

$SoilType := 2$

$$T0 := \begin{cases} 0.1 & \text{if } SoilType = 1 \\ 0.1 & \text{if } SoilType = 2 \\ 0.15 & \text{if } SoilType = 3 \\ 0.15 & \text{if } SoilType = 4 \end{cases} \qquad Ts := \begin{cases} 0.4 & \text{if } SoilType = 1 \\ 0.5 & \text{if } SoilType = 2 \\ 0.7 & \text{if } SoilType = 3 \\ 1.0 & \text{if } SoilType = 4 \end{cases} \qquad S := \begin{cases} 1.5 & \text{if } (SoilType \le 2) \\ 1.75 & \text{if } SoilType = 3 \\ 1.75 & \text{if } [(SoilType = 4) \wedge (A \ge 0.3)] \\ 2.25 & \text{if } [(SoilType = 4) \wedge (A < 0.3)] \end{cases}$$

$$Tx := 0.05H^{\frac{3}{4}} = 0.366 \qquad Ty := 0.05 \cdot H^{\frac{3}{4}} = 0.366$$

$$Bx := \begin{cases} \left[1 + S \cdot \left(\frac{Tx}{T0}\right)\right] & \text{if } 0 \le Tx \le T0 \\ (S+1) & \text{if } T0 < Tx < Ts \\ \left[(S+1) \cdot \left(\frac{Ts}{Tx}\right)^{\frac{2}{3}}\right] & \text{if } Tx \ge Ts \end{cases} \qquad By := \begin{cases} \left[1 + S \cdot \left(\frac{Ty}{T0}\right)\right] & \text{if } 0 \le Ty \le T0 \\ (S+1) & \text{if } T0 < Ty < Ts \\ \left[(S+1) \cdot \left(\frac{Ts}{Ty}\right)^{\frac{2}{3}}\right] & \text{if } Ty \ge Ts \end{cases}$$

$Bx = 2.5$ $By = 2.5$

$$Cx := \frac{A \cdot Bx \cdot I}{Rx} = 0.167 \qquad Cy := \frac{A \cdot By \cdot I}{Ry} = 0.167$$

Part III: Between axis 23 to 25

seismic equivalent load calculation

structura height $H := 10.5$ m

seismic base acceleration $A := 0.3$

important factor $I := 1$

$Rx := 4.5$ $Ry := 4.5$

$SoilType := 2$

$$T0 := \begin{cases} 0.1 & \text{if } SoilType = 1 \\ 0.1 & \text{if } SoilType = 2 \\ 0.15 & \text{if } SoilType = 3 \\ 0.15 & \text{if } SoilType = 4 \end{cases} \qquad Ts := \begin{cases} 0.4 & \text{if } SoilType = 1 \\ 0.5 & \text{if } SoilType = 2 \\ 0.7 & \text{if } SoilType = 3 \\ 1.0 & \text{if } SoilType = 4 \end{cases} \qquad S := \begin{cases} 1.5 & \text{if } (SoilType \le 2) \\ 1.75 & \text{if } SoilType = 3 \\ 1.75 & \text{if } [(SoilType = 4) \wedge (A \ge 0.3)] \\ 2.25 & \text{if } [(SoilType = 4) \wedge (A < 0.3)] \end{cases}$$

$$Tx := 0.05H^{\frac{3}{4}} = 0.292 \qquad Ty := 0.05 \cdot H^{\frac{3}{4}} = 0.292$$

$$Bx := \begin{cases} \left[1 + S \cdot \left(\frac{Tx}{T0}\right)\right] & \text{if } 0 \le Tx \le T0 \\ (S+1) & \text{if } T0 < Tx < Ts \\ \left[(S+1) \cdot \left(\frac{Ts}{Tx}\right)^{\frac{2}{3}}\right] & \text{if } Tx \ge Ts \end{cases} \qquad By := \begin{cases} \left[1 + S \cdot \left(\frac{Ty}{T0}\right)\right] & \text{if } 0 \le Ty \le T0 \\ (S+1) & \text{if } T0 < Ty < Ts \\ \left[(S+1) \cdot \left(\frac{Ts}{Ty}\right)^{\frac{2}{3}}\right] & \text{if } Ty \ge Ts \end{cases}$$

$Bx = 2.5$ $By = 2.5$

$$Cx := \frac{A \cdot Bx \cdot I}{Rx} = 0.167 \qquad Cy := \frac{A \cdot By \cdot I}{Ry} = 0.167$$

EZ (Earthquake Loads in the Z direction)

Vertical earthquake load for beams with remarkable concentrated load of building shall be defined as below

$$F_v = 0.7 \times A \times I \times W_P = 0.7 \times 0.3 \times 1 \times W_P = 0.21\, W_P$$

$$W_p: Dead\ plus\ live\ load$$

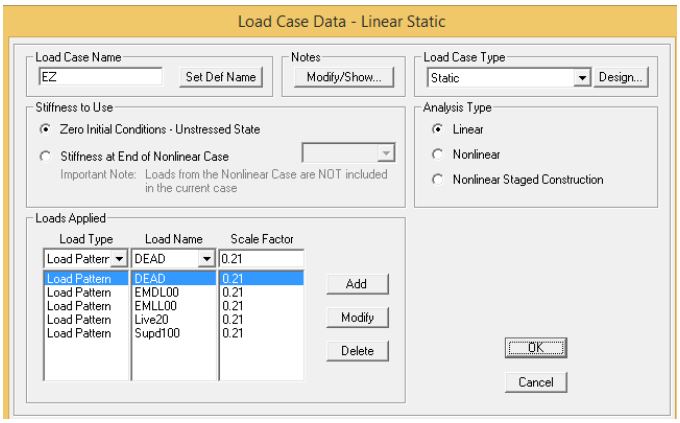

Figure 4: Vertical earthquake load case (EZ)

4.6. WIND LOAD:

The effects of Wind load are negligible in this model against seismic load as the whole structure is not closed.

Assuming that closed area to total area of pipe rack is equal to 0.2 conservatively wind load is calculated as below

$$C_e = \begin{cases} 2 & for\ \ 0 < h < 10m \\ 2.2 & for\ \ 10 < h < 20m \end{cases}$$

$$e = 0.2 \rightarrow C_q = 4(0.2)^2 - 5.9(0.2) + 4 = 2.98$$

$$V = \frac{110km}{h} \rightarrow q = 60.5\ kg/m^2$$

Part 1:

$$V_x = C_e C_q q A = (2 * 2.98 * 60.5)(0.2 * (40.1 * 9.6 + 30.2 * 10) + (2.2 * 2.98 * 60.5) \times (0.2 * 30.2 * 4.2)$$
$$\cong 59.4 < C_X W \approx 66\ ton$$

PART2:

$$V_x = C_e C_q q A = (2.2 * 2.98 * 60.5) * (.2 * 64 * 14.2) \cong 72\ ton < C_X W \approx 105\ ton$$

PART3:

$$V_x = C_e C_q q A = (2.2 * 2.98 * 60.5) * (.2 * 15 * 10.5) \cong 12.4\ ton < C_X W \approx 29\ ton$$

Wind load in y direction is negligible due to the lower wind projection area.

4.7. THERMAL LOAD

In this structure, thermal stresses are mainly due to change in ambient temperature and pipes expansion/contraction. Effect of ambient temperature changes will be applied by imposing +30/-30 degrees Celsius changes.

4.8. ERECTION AND MAINTENANCE LOAD

No special erection load is noted on drawings.

5. LOAD CASES AND LOAD COMBINATIONS

Load cases and load combinations are defined in the model as below

5.1. LAOD CASES

Load cases are defined according to the following table
Descriptions of load patterns used in load cases are mentioned before.

Supd100	**Load pattern**	**Supd100**	**1**
EMEYLO	Load pattern	EMEYLO	1
EMEXLO	Load pattern	EMEXLO	1
Live20	Load pattern	Live20	1
EX	Load pattern	EX	1
EY	Load pattern	EY	1
TL	Load pattern	TL	1
Live00	Load pattern	Live00	1
EMDL00	Load pattern	EMDL00	1
Soil	Load pattern	Soil	1
DEAD	Load pattern	DEAD	1

	Load pattern	EMDL00	1
	Load pattern	Supd100	1
DL	Load pattern	DEAD	1
	Load pattern	EMDL00	1
	Load pattern	EMLL00	1
	Load pattern	Live00	1
	Load pattern	Live20	1
	Load pattern	Supd100	1
EZ	Load pattern	DEAD	0.21
	Load pattern	EMDL00	0.21
	Load pattern	EMLL00	0.21
	Load pattern	Live20	0.21
	Load pattern	Supd100	0.21
LIVE-1	Load pattern	Live00	1
	Load pattern	Live20	1
LIVE-2	Load pattern	Live00	-1
	Load pattern	Live20	1

5.2. LOAD COMBINATIONS

Load combinations are considered in accordance with Iranian National Building Codes – Part 6. In addition, structure members are designed and controlled for seismic load combinations which include 100% of earthquake load in one direction combined with 30% of earthquake load in the other direction due to the fact that the structure is irregular.

Also earthquake load in Z direction shall be combined with other seismic load combinations for design of concentrated loaded beam and with their column.

For simplicity all dead load consist of Dead, EMDL00 and Supd100 and all live load consist of (Live00, Live20) are defined in new analysis cases called Dead and live load.

- Definition of load combinations

Load combinations are starting with a 4 digit number e.g. 0025****. After the number there are some letters which define each load combinations. First Letter after this number refers to main category of that load combination (S structural Steel design- C for Structural concrete design – P for soil pressure control).

Steel Design load combination (First letter is “S”)

After the combination number there are 4 letters. As mentioned before the first letter is “S”, the second letter after the number refers to the sub-category of the load (“O” Stands for ordinary load combinations and “I” for intensive load combination). The third letter refers to the type of load as defined below for each sub-category. The last letter is a description of each load combination for simplicity of recognition which is G(gravity), E(Earthquake), W(wind), T(temperature) … for ordinary load combinations and crane axis location for load combinations that have crane load.

Load combinations for static and dynamic analysis are specified by suffix “-ST” and “-DY”

Load combinations for static analysis are as below (with ST suffix in the model)

- Ordinary load combinations

Type A

1) Dead

$$2-3)\begin{cases}\text{Dead}+\text{Live}-1\\ \text{Dead}+\text{Live}-2\end{cases}$$

$$\left.\begin{matrix}4-7\\8-11\end{matrix}\right)\begin{cases}0.75(\text{Dead}\pm\text{Ex}\pm0.3\text{Ey})\\0.75(\text{Dead}\pm0.3\text{Ex}\pm\text{Ey})\end{cases}$$

$$12-27)\begin{cases}0.75(\text{Dead}+\text{Live}-1\pm\text{Ex}\pm0.3\text{Ey})\\0.75(\text{Dead}+\text{Live}-1\pm0.3\text{Ex}\pm\text{Ey})\\0.75(\text{Dead}+\text{Live}-2\pm\text{Ex}\pm0.3\text{Ey})\\0.75(\text{Dead}+\text{Live}-2\pm0.3\text{Ex}\pm\text{Ey})\end{cases}$$

$$\left.\begin{matrix}28-31\\32-35\end{matrix}\right)\begin{cases}0.75(\text{Dead}\pm\text{EMEXLO}\pm0.3\text{EMEYLO})\\0.75(\text{Dead}\pm0.3\text{EMEXLO}\pm\text{EMEYLO})\end{cases}$$

$$36-51)\begin{cases}0.75(\text{Dead}+\text{Live}-1\pm\text{EMEXLO}\pm0.3\text{EMEYLO})\\0.75(\text{Dead}+\text{Live}-1\pm0.3\text{EMEXLO}\pm\text{EMEYLO})\\0.75(\text{Dead}+\text{Live}-2\pm\text{EMEXLO}\pm0.3\text{EMEYLO})\\0.75(\text{Dead}+\text{Live}-2\pm0.3\text{EMEXLO}\pm\text{EMEYLO})\end{cases}$$

$$52-53)\ 0.75(\text{Dead}\pm\text{T})$$

$$54-57)\begin{cases}0.75(\text{Dead}+\text{Live}-1\pm\text{T})\\0.75(\text{Dead}+\text{Live}-2\pm\text{T})\end{cases}$$

- Type B: Load combinations that include vertical earthquake effect:

$$58-105\ )\begin{cases}0.75(\text{Dead}+\text{Live}-1\pm\text{Ex}\pm0.3\text{Ey}\pm0.3\text{EZ})\\0.75(\text{Dead}+\text{Live}-1\pm0.3\text{Ex}\pm\text{Ey}\pm0.3\text{EZ})\\0.75(\text{Dead}+\text{Live}-1\pm0.3\text{Ex}\pm0.3\text{Ey}\pm\text{EZ})\\0.75(\text{Dead}+\text{Live}-1\pm\text{EMEXLO}\pm0.3\text{EMEYLO}\pm0.3\text{EZ})\\0.75(\text{Dead}+\text{Live}-1\pm0.3\text{EMEXLO}\pm\text{EMEYLO}\pm0.3\text{EZ})\\0.75(\text{Dead}+\text{Live}-1\pm0.3\text{EMEXLO}\pm0.3\text{EMEYLO}\pm\text{EZ})\end{cases}$$

$$106-153\ )\begin{cases}0.75(\text{Dead}+\text{Live}-2\pm\text{Ex}\pm0.3\text{Ey}\pm0.3\text{EZ})\\0.75(\text{Dead}+\text{Live}-2\pm0.3\text{Ex}\pm\text{Ey}\pm0.3\text{EZ})\\0.75(\text{Dead}+\text{Live}-2\pm0.3\text{Ex}\pm0.3\text{Ey}\pm\text{EZ})\\0.75(\text{Dead}+\text{Live}-2\pm\text{EMEXLO}\pm0.3\text{EMEYLO}\pm0.3\text{EZ})\\0.75(\text{Dead}+\text{Live}-2\pm0.3\text{EMEXLO}\pm\text{EMEYLO}\pm0.3\text{EZ})\\0.75(\text{Dead}+\text{Live}-2\pm0.3\text{EMEXLO}\pm0.3\text{EMEYLO}\pm\text{EZ})\end{cases}$$

- Intensive load combinations

  As specified is Iranian National Building Codes, Part 10 Steel Structures the over strength factor (Ω) for concentric brace frame is equal to 2.

  Type A

$$\begin{matrix}154-157\\158-161\end{matrix}\Big)\begin{cases}0.75\left(\text{Dead}\pm\Omega_{0x}\text{Ex}\pm0.3\Omega_{0y}\Omega_{0y}\right)\\0.75\left(\text{Dead}\pm0.3\Omega_{0x}\text{Ex}\pm\Omega_{0y}\Omega_{0y}\right)\end{cases}$$

$$162-177)\begin{cases}0.75(\text{Dead}+\text{Live}-1\pm\Omega_{0x}\text{Ex}\pm0.3\Omega_{0y}\text{Ey})\\0.75(\text{Dead}+\text{Live}-1\pm0.3\Omega_{0x}\text{Ex}\pm\Omega_{0y}\text{Ey})\\0.75(\text{Dead}+\text{Live}-2\pm\Omega_{0x}\text{Ex}\pm0.3\Omega_{0y}\text{Ey})\\0.75(\text{Dead}+\text{Live}-2\pm0.3\Omega_{0x}\text{Ex}\pm\Omega_{0y}\text{Ey})\end{cases}$$

$$\begin{matrix}178-181\\182-185\end{matrix})\begin{cases}0.75(\text{Dead}\pm\Omega_{0x}\text{EMEXLO}\pm0.3\Omega_{0y}\text{EMEYLO})\\0.75(\text{Dead}\pm\Omega_{0x}0.3\text{EMEXLO}\pm\Omega_{0y}\text{EMEYLO})\end{cases}$$

$$186-201)\begin{cases}0.75(\text{Dead}+\text{Live}-1\pm\Omega_{0x}\text{Ex}\pm0.3\Omega_{0y}\text{Ey})\\0.75(\text{Dead}+\text{Live}-1\pm0.3\Omega_{0x}\text{Ex}\pm\Omega_{0y}\text{Ey})\\0.75(\text{Dead}+\text{Live}-2\pm\Omega_{0x}\text{Ex}\pm0.3\Omega_{0y}\text{Ey})\\0.75(\text{Dead}+\text{Live}-2\pm0.3\Omega_{0x}\text{Ex}\pm\Omega_{0y}\text{Ey})\end{cases}$$

- Type B: Load combinations that include vertical earthquake effect:

$$202-233\,)\begin{cases}0.75(\text{Dead}+\text{Live}-1\pm\Omega_{0x}\text{Ex}\pm0.3\Omega_{0y}\text{Ey}\pm0.3\text{EZ})\\0.75(\text{Dead}+\text{Live}-1\pm0.3\Omega_{0}\text{xEx}\pm\Omega_{0y}\text{Ey}\pm0.3\text{EZ})\\0.75(\text{Dead}+\text{Live}-2\pm\Omega_{0x}\text{Ex}\pm0.3\Omega_{0y}\text{Ey}\pm0.3\text{EZ})\\0.75(\text{Dead}+\text{Live}-2\pm0.3\Omega_{0x}\text{Ex}\pm\Omega_{0y}\text{Ey}\pm0.3\text{EZ})\end{cases}$$

$$234-265\,)\begin{cases}0.75(\text{Dead}+\text{Live}-1\pm\Omega_{0x}\text{EMEXLO}\pm0.3\Omega_{0y}\text{EMEYLO}\pm0.3\text{EZ})\\0.75(\text{Dead}+\text{Live}-1\pm0.3\Omega_{0}\text{xEMEXLO}\pm\Omega_{0y}\text{EMEYLO}\pm0.3\text{EZ})\\0.75(\text{Dead}+\text{Live}-2\pm\Omega_{0x}\text{EMEXLO}\pm0.3\Omega_{0y}\text{EMEYLO}\pm0.3\text{EZ})\\0.75(\text{Dead}+\text{Live}-2\pm0.3\Omega_{0x}\text{EMEXLO}\pm\Omega_{0y}\text{EMEYLO}\pm0.3\text{EZ})\end{cases}$$

Where:

$\Omega_{0x}=2\ ,\ \Omega_{0y}=2$

- Concrete Design load combinations (First letter is “C”)

After the combination number there are 3 letters. As mentioned before the first letter is "C", the second letter after the number refers to the type of the load as defined below for each sub-category. The last letter is a description of each load combination for simplicity of recognition which is G(gravity), E(Earthquake), W(wind) and T(temperature)

Type A:

$$266)1.4DEAD$$

$$267-268)\begin{cases}1.4DEAD+1.7LIVE-1\\1.4DEAD+1.7LIVE-2\end{cases}$$

$$\left.\begin{matrix}269-272\\273-276\end{matrix}\right)\begin{cases}0.9\ DEAD+1.43(\pm Ex\pm 0.3Ey)\\0.9\ DEAD+1.43(\pm 0.3Ex\pm Ey)\end{cases}$$

$$277-292)\begin{cases}1.05\ DEAD+1.275\ LIVE-1+1.4025(\pm Ex\pm 0.3Ey)\\1.05\ DEAD+1.275\ LIVE-1+1.4025(\pm 0.3Ex\pm Ey)\\1.05\ DEAD+1.275\ LIVE-2+1.4025(\pm Ex\pm 0.3Ey)\\1.05\ DEAD+1.275\ LIVE-2+1.4025(\pm 0.3Ex\pm Ey)\end{cases}$$

$$293-294)\ 1.4Dead\pm 1.4T$$

$$295-298)\begin{cases}0.75(1.4Dead+1.7Live-1\pm 1.4T)\\0.75(1.4Dead+1.7Live-2\pm 1.4T)\end{cases}$$

Type B: Load combinations that include vertical earthquake effect:

$$299-322)\begin{cases}1.05\ DEAD+1.275\ LIVE-1+1.4025(\pm Ex\pm 0.3Ey\pm 0.3EZ)\\1.05\ DEAD+1.275\ LIVE-1+1.4025(\pm 0.3Ex\pm Ey\pm 0.3EZ)\\1.05\ DEAD+1.275\ LIVE-1+1.4025(\pm 0.3\ Ex\pm 0.3\ Ey\pm EZ)\end{cases}$$

$$323-346)\begin{cases}1.05\ DEAD+1.275\ LIVE-2+1.4025(\pm Ex\pm 0.3Ey\pm 0.3EZ)\\1.05\ DEAD+1.275\ LIVE-2+1.4025(\pm 0.3Ex\pm Ey\pm 0.3EZ)\\1.05\ DEAD+1.275\ LIVE-2+1.4025(\pm 0.3\ Ex\pm 0.3\ Ey\pm EZ)\end{cases}$$

Load combinations used for dynamic analysis are as below (with DY suffix in the model)

- Ordinary load combinations

Type A

347) Dead

$$348-349)\begin{cases}\text{Dead}+\text{Live}-1\\ \text{Dead}+\text{Live}-2\end{cases}$$

$$350-351)\begin{cases}0.75(\text{Dead}+\text{SPECX}+0.3\text{SPECY})\\ 0.75(\text{Dead}+0.3\text{SPECX}+\text{SPECY})\end{cases}$$

$$352-355)\begin{cases}0.75(\text{Dead}+\text{Live}-1+\text{SPECX}+0.3\text{SPECY})\\ 0.75(\text{Dead}+\text{Live}-1+0.3\text{SPECX}+\text{SPECY})\\ 0.75(\text{Dead}+\text{Live}-2+\text{SPECX}+0.3\text{SPECY})\\ 0.75(\text{Dead}+\text{Live}-2+0.3\text{SPECX}+\text{SPECY})\end{cases}$$

$$356-357)\ 0.75(\text{Dead}\pm\text{T})$$

$$358-361)\begin{cases}0.75(\text{Dead}+\text{Live}-1\pm\text{T})\\ 0.75(\text{Dead}+\text{Live}-2\pm\text{T})\end{cases}$$

- Type B: Load combinations that include vertical earthquake effect:

$$362-367\ )\begin{cases}0.75(\text{Dead}+\text{Live}-1+\text{SPECX}+0.3\text{SPECY}\pm0.3\text{EZ})\\ 0.75(\text{Dead}+\text{Live}-1+0.3\text{SPECX}+\text{SPECY}\pm0.3\text{EZ})\\ 0.75(\text{Dead}+\text{Live}-1+0.3\text{SPECX}+0.3\text{SPECY}\pm\text{EZ})\end{cases}$$

$$668-673\ )\begin{cases}0.75(\text{Dead}+\text{Live}-2+\text{SPECX}+0.3\text{SPECY}\pm0.3\text{EZ})\\ 0.75(\text{Dead}+\text{Live}-2+0.3\text{SPECX}+\text{SPECY}\pm0.3\text{EZ})\\ 0.75(\text{Dead}+\text{Live}-2+0.3\text{SPECX}+0.3\text{SPECY}\pm\text{EZ})\end{cases}$$

- Intensive load combinations

  As specified is Iranian National Building Codes, Part 10 Steel Structures the over strength factor (Ω) for concentric brace frame is equal to 2.

  Type A

$$374-375)\begin{cases}0.75(\text{Dead}+\ \Omega_{0x}\text{SPECX}+0.3\Omega_{0y}\text{SPECY})\\ 0.75(\text{Dead}+0.3\Omega_{0x}\text{SPECX}+\Omega_{0y}\text{SPECY})\end{cases}$$

$$376-379)\begin{cases}0.75(\text{Dead}+\text{Live}-1+\Omega_{0x}\text{SPECX}+0.3\Omega_{0y}\text{SPECY})\\0.75(\text{Dead}+\text{Live}-1+0.3\Omega_{0x}\text{SPECX}+\Omega_{0y}\text{SPECY})\\0.75(\text{Dead}+\text{Live}-2+\Omega_{0x}\text{SPECX}+0.3\Omega_{0y}\text{SPECY})\\0.75(\text{Dead}+\text{Live}-2+0.3\Omega_{0x}\text{SPECX}+\Omega_{0y}\text{SPECY})\end{cases}$$

- Type B: Load combinations that include vertical earthquake effect:

$$380-387\ )\begin{cases}0.75\big(\text{Dead}+\text{Live}-1+\Omega_{0x}\text{SPECX}+0.3\Omega_{0y}\text{SPECY}\pm 0.3\text{EZ}\big)\\0.75\big(\text{Dead}+\text{Live}-1+0.3\Omega_{0x}\text{SPECX}+\Omega_{0y}\text{SPECY}\pm 0.3\text{EZ}\big)\\0.75\big(\text{Dead}+\text{Live}-2+\Omega_{0x}\text{SPECX}+0.3\Omega_{0y}\text{SPECY}\pm 0.3\text{EZ}\big)\\0.75\big(\text{Dead}+\text{Live}-2+0.3\Omega_{0x}\text{SPECX}+\Omega_{0y}\text{SPECY}\pm 0.3\text{EZ}\big)\end{cases}$$

Where:

$\Omega_{0x}=2\ \ ,\Omega_{0y}=2$

Example:

0052SOAE-ST: Static load combination 0008 for structural ordinary combination with group type “A” and E shows load is for considering earthquake effect

- soil pressure control

Soil pressure load combinations are the same as steel design load combination type A and B

6. Analysis & Design

6.1. Dynamic Analysis

Dynamic analysis of structure will be performed in order to evaluate the seismic effect on structural components. 90 percent of the mass in each direction should be activated.

Modal Load Participation Ratios (Part I)				
Output Case	Item Type	Item	Static	Dynamic
Text	Text	Text	Percent	Percent
MODAL	Acceleration	UX	99.98	94.60
MODAL	Acceleration	UY	99.89	94.10
MODAL	Acceleration	UZ	83.19	27.57

Modal Load Participation Ratios (Part II)				
Output Case	**Item Type**	**Item**	**Static**	**Dynamic**
Text	Text	Text	Percent	Percent
MODAL	Acceleration	UX	99.97	93.87
MODAL	Acceleration	UY	99.82	94.04
MODAL	Acceleration	UZ	77.19	11.7

Modal Load Participation Ratios (Part III)				
Output Case	**Item Type**	**Item**	**Static**	**Dynamic**
Text	Text	Text	Percent	Percent
MODAL	Acceleration	UX	100.00	98.11
MODAL	Acceleration	UY	100.00	98.30
MODAL	Acceleration	UZ	94.20	14.43

It is worthy to mention that in every case more than 90% of the mass in each direction is activated.

6.2. Deformations

Height of structure H=14.2 m

In X and Y direction: Max $\Delta W = (0.025 \times 14.2)/(0.7 \times 4.5) = 0.1126$ m

6.3. Internal Forces

For internal forces refer to SAP analysis Model.

6.4. Design Ratio

For internal forces refer to SAP analysis Model.

7. APPENDIX

APPENDIX A: EQUIPMENTS LOAD

Equipment loads are assigned to the model according to piping load as below. Loading data file is attached to the calculation book

GENERAL NOTES

ALL DIMENSIONS ARE IN MILIMITERS.

OPE: LOAD IN OPERATING CONDITION

SEI: SEISMIC LOAD

FUT: FUTURE LOAD

FOR MAINTENANCE AND ACCESS CONSIDER 250 Kg/m2 LOAD IN THE PLAE FORM

Figure 5: General loading notes and loading at EL4260

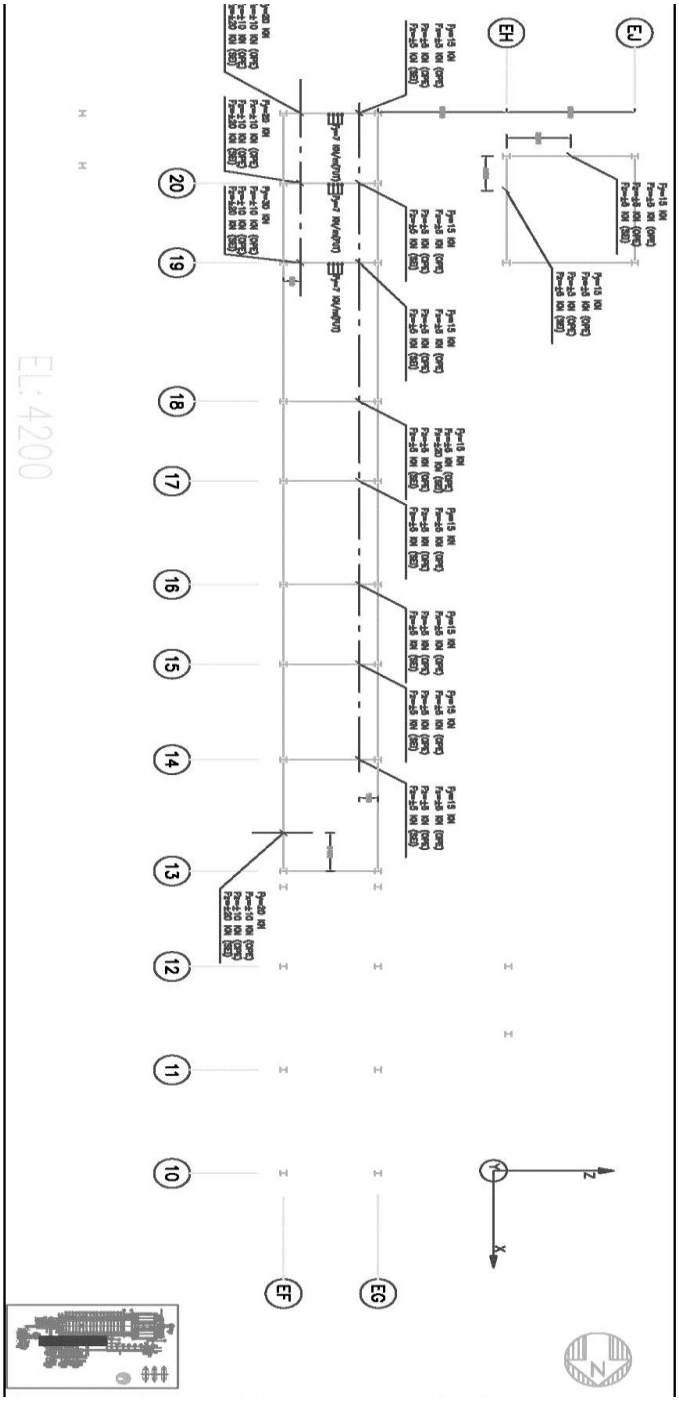

Figure 6: loading plan at elevation 4200

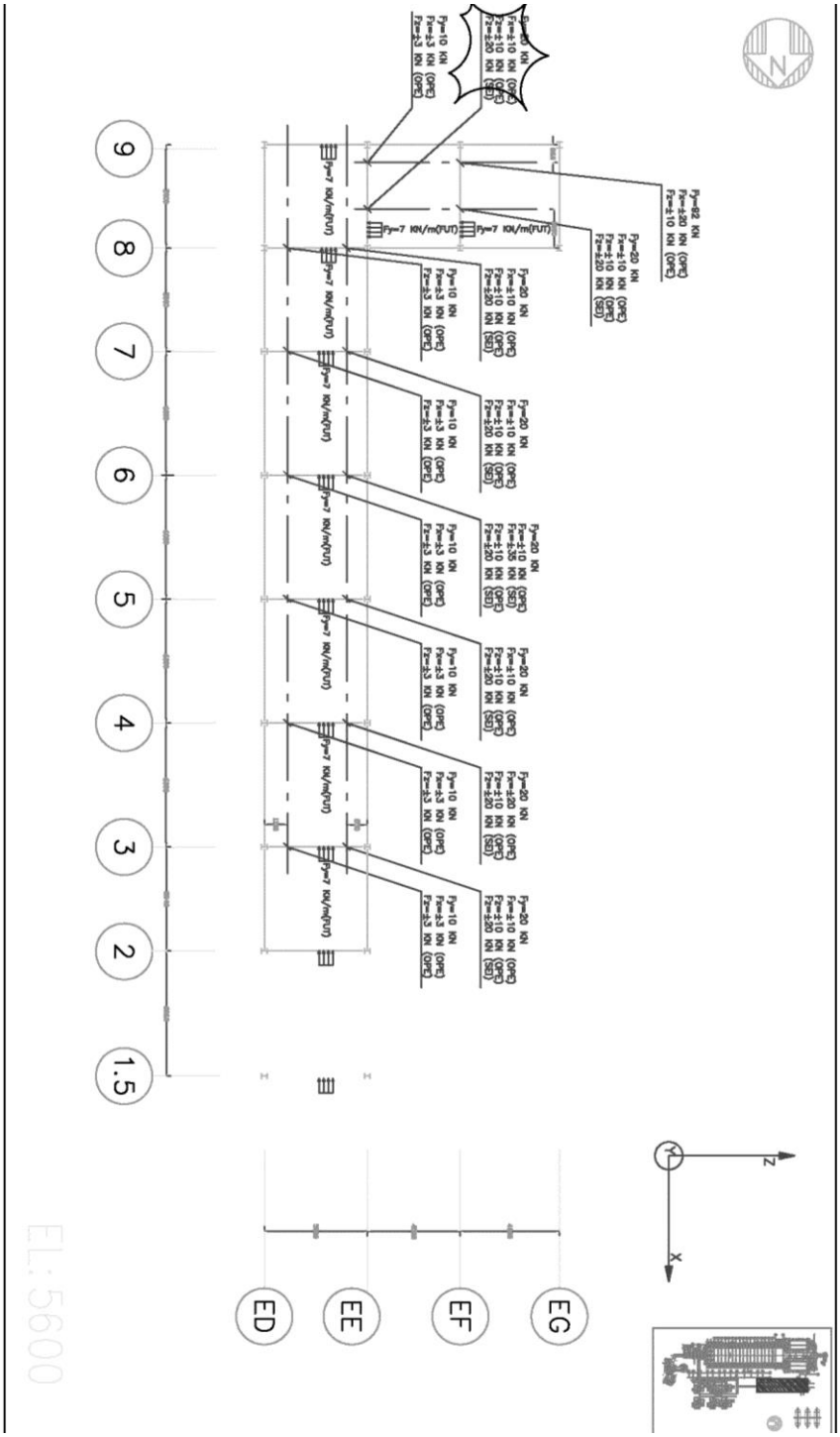

Figure 7: loading plan at elevation 5600

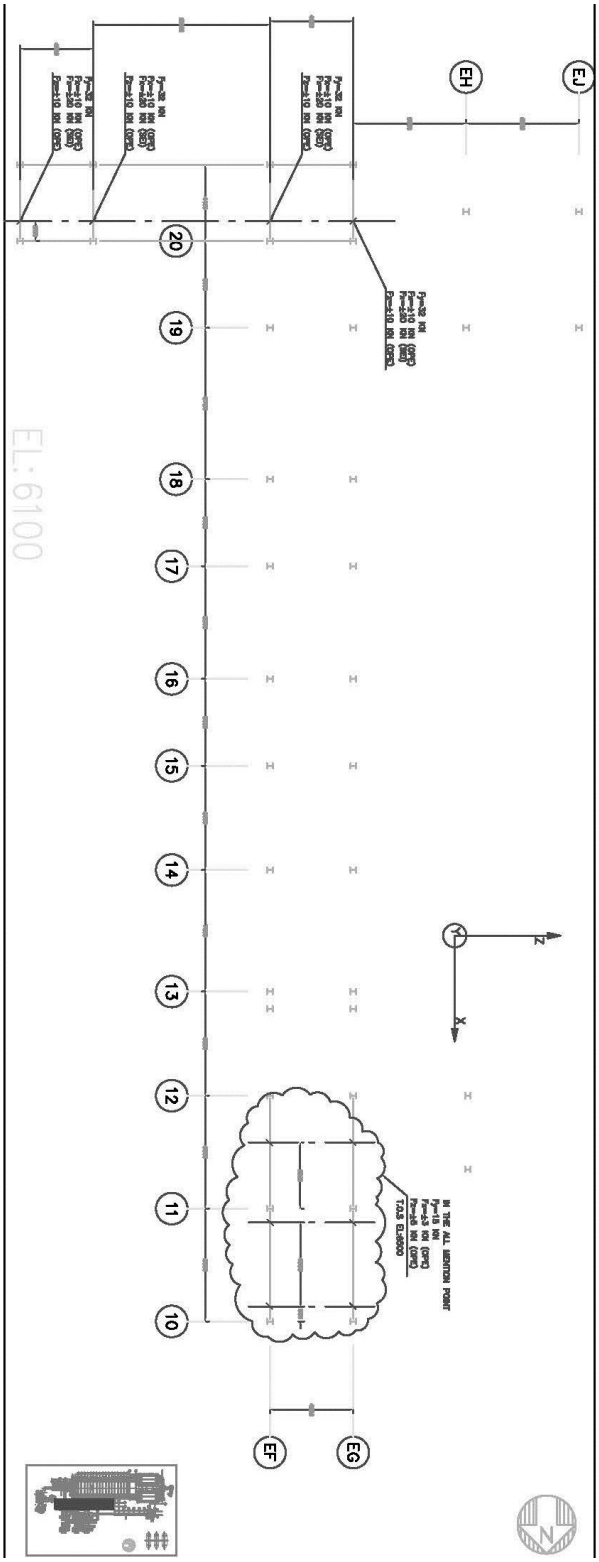

Figure 8: loading plan at elevation 6100

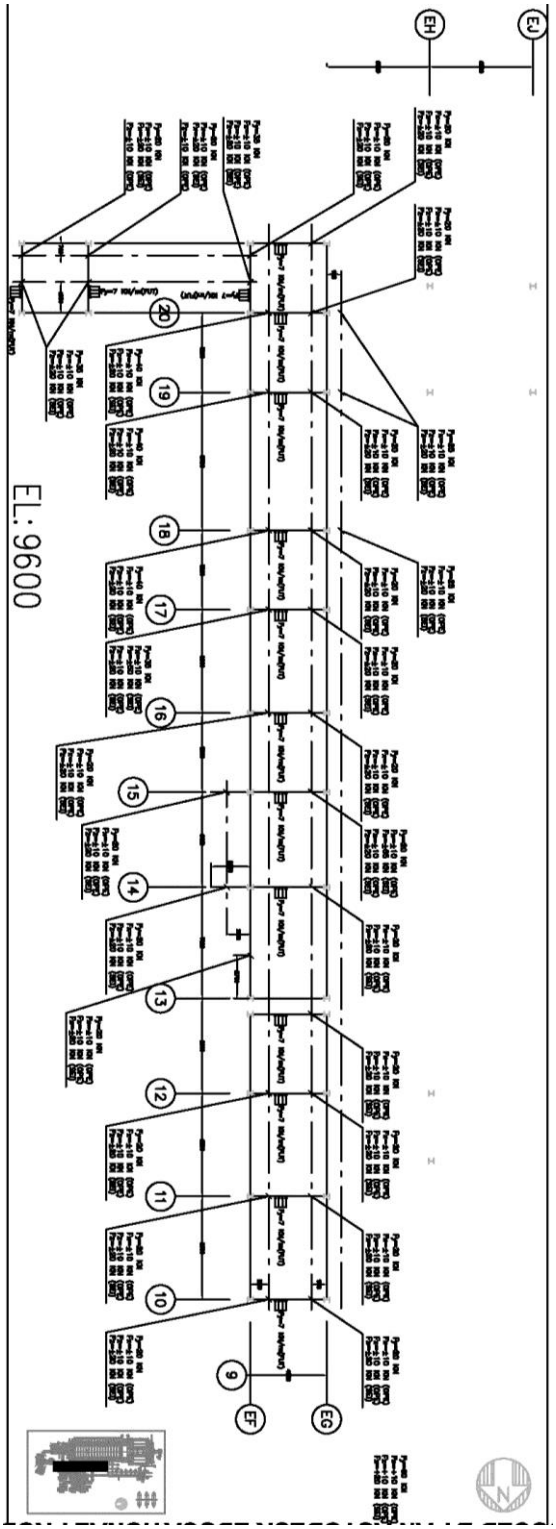

Figure 9: loading plan at elevation 9600

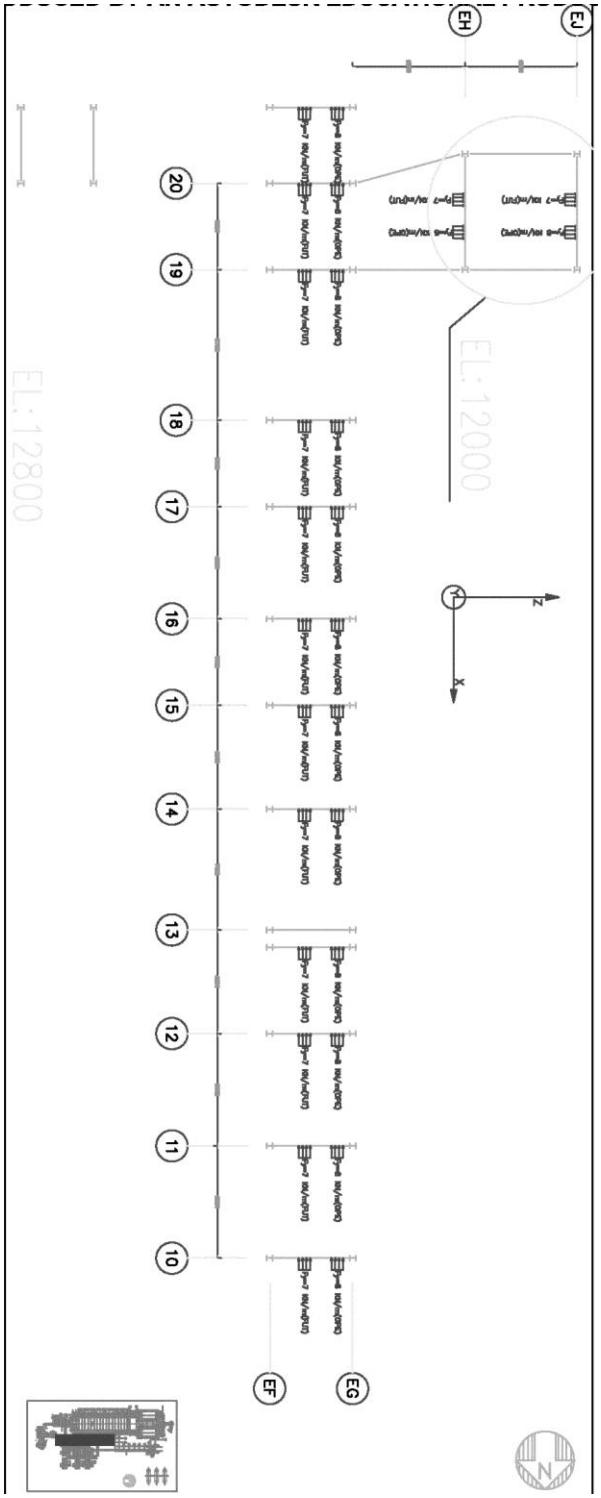

Figure 10: loading plan at elevation 12800

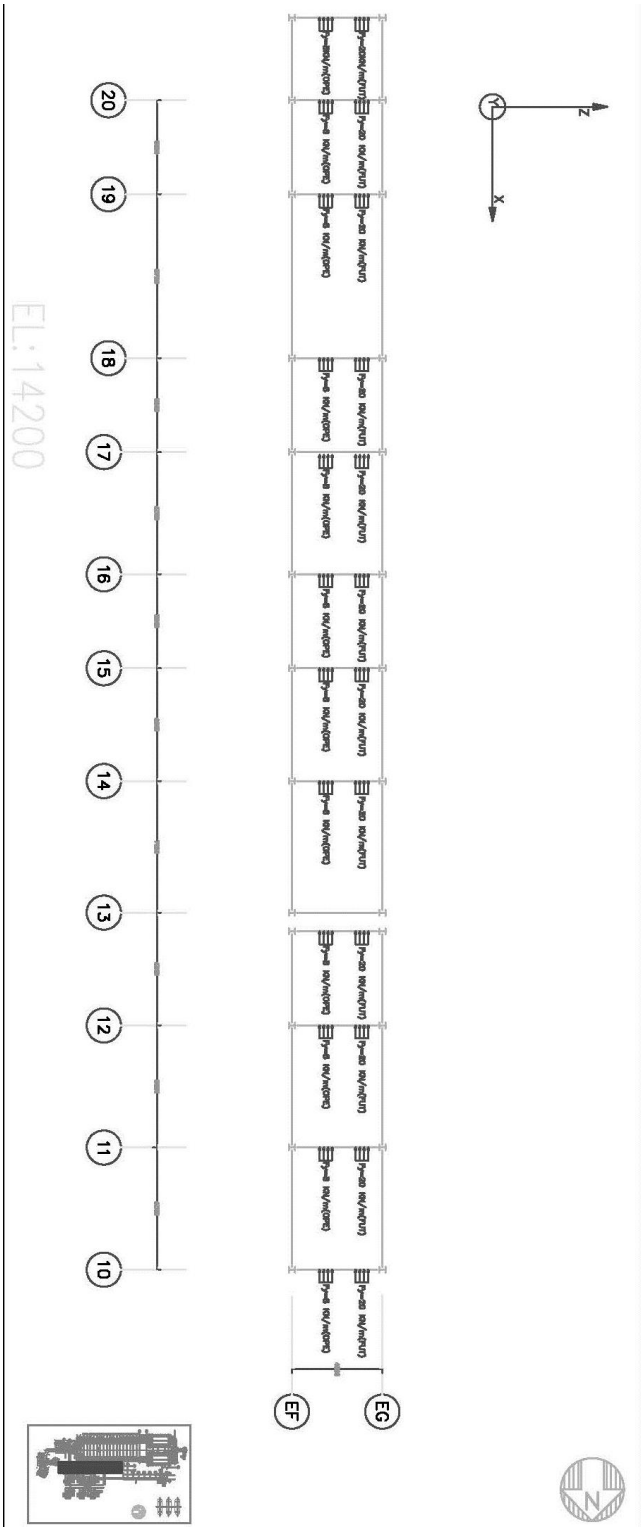

Figure 11: loading plan at elevation 14200

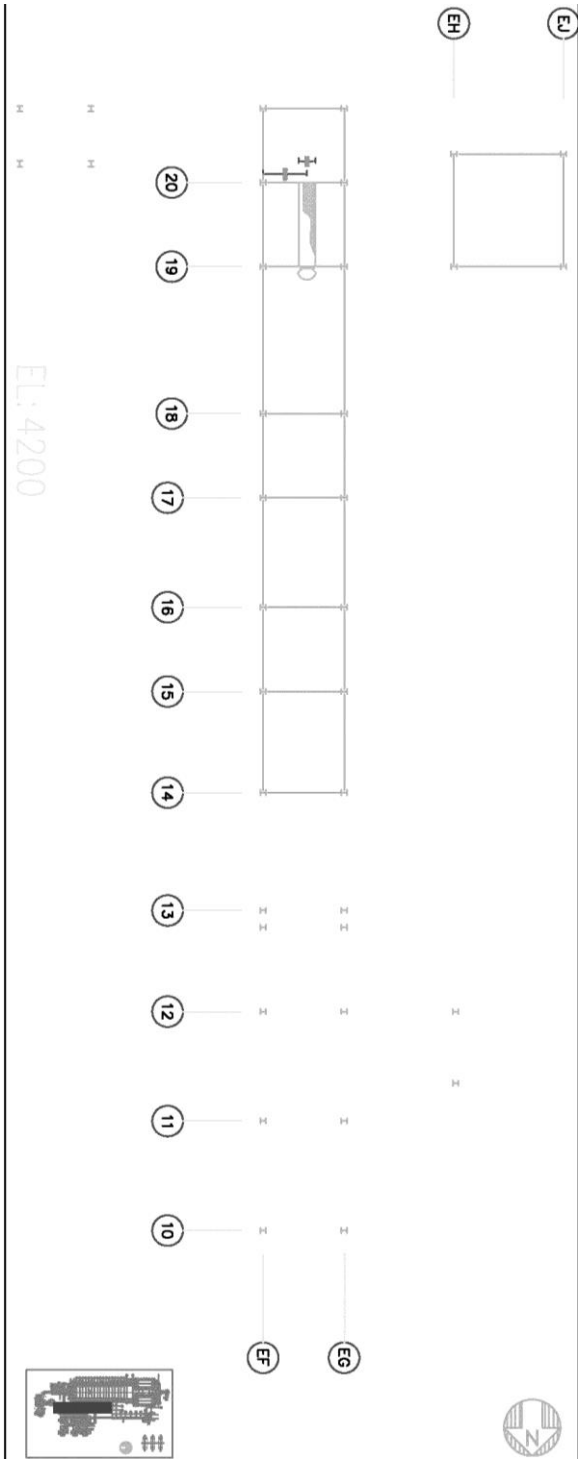

Figure 12: Platform at elevation 4200

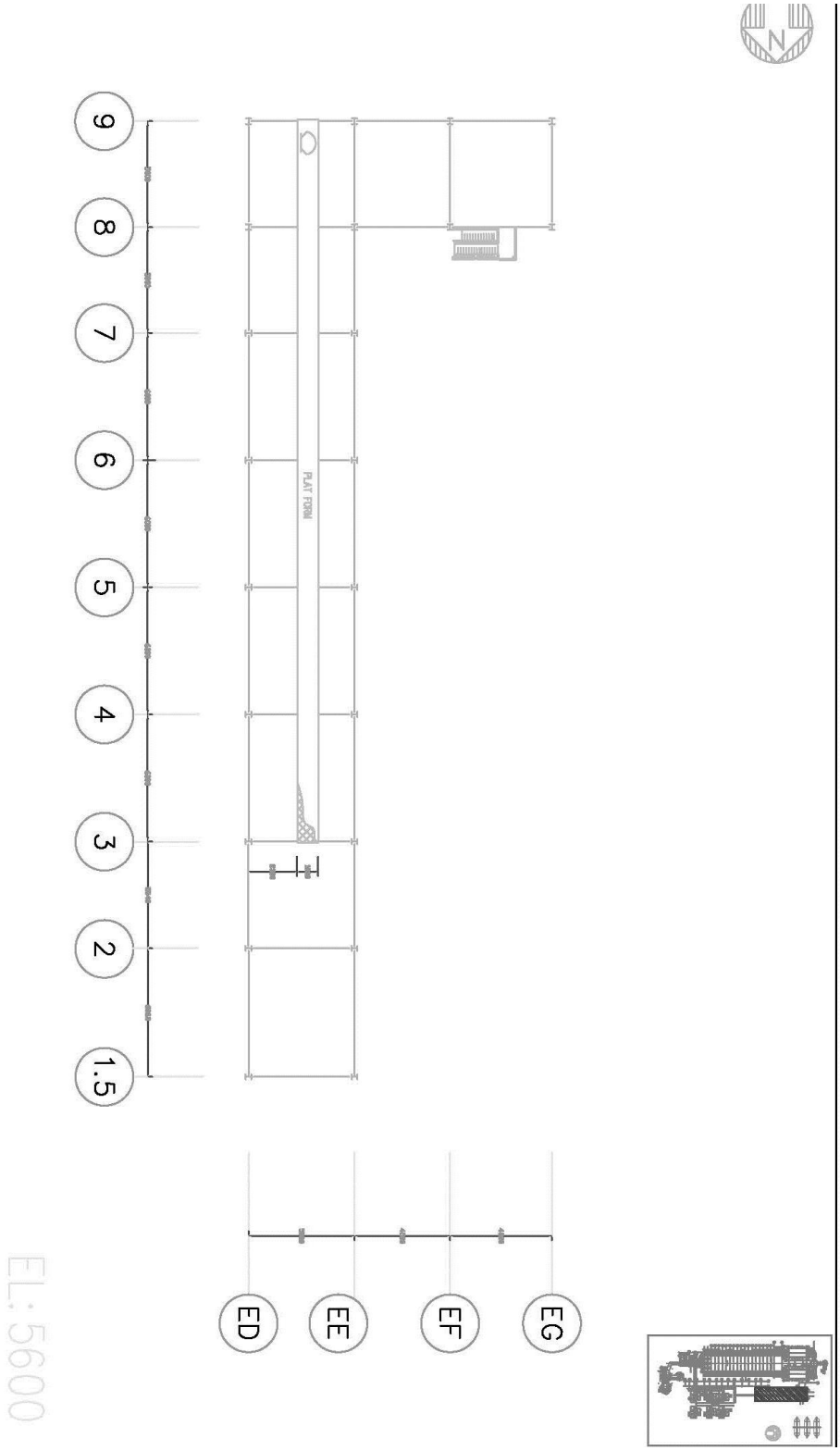

Figure 13: Platform at elevation 5600

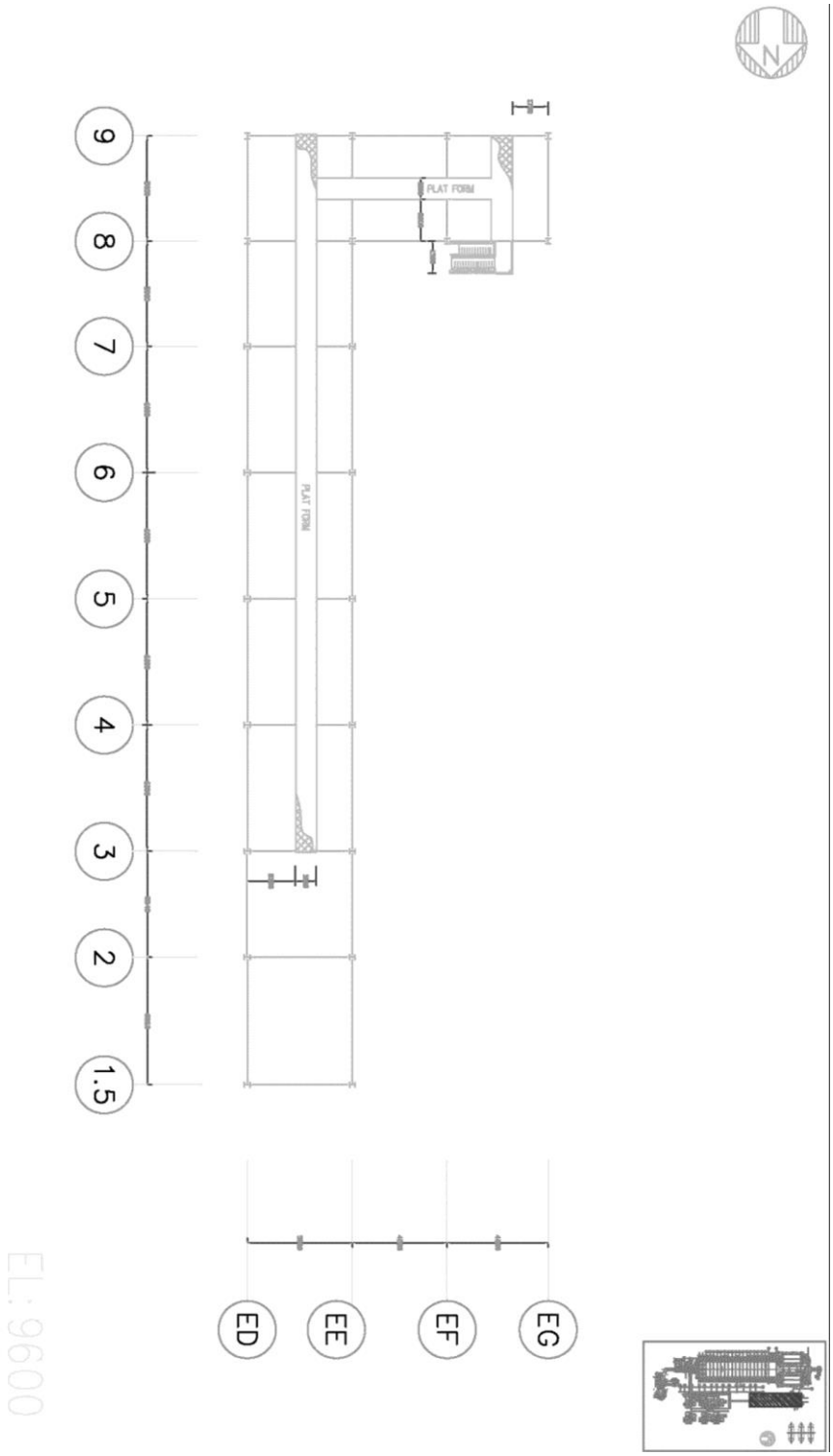

Figure 14: Platform at elevation 9600 part 1

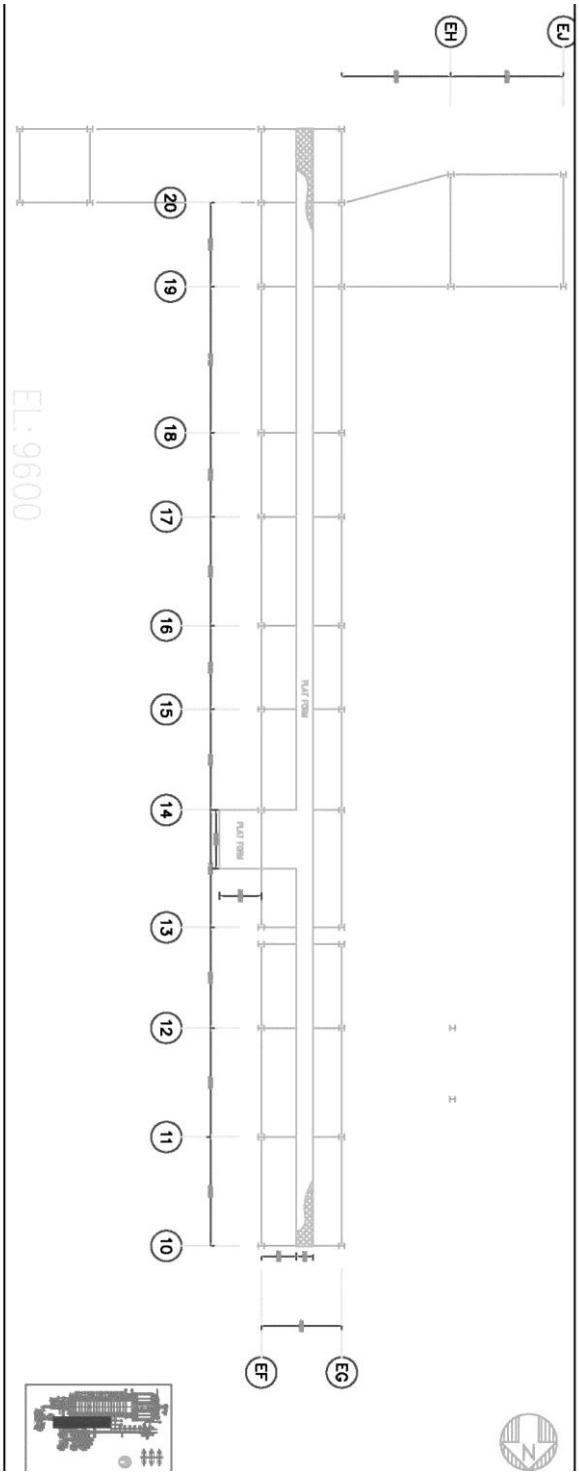

Figure 15: Platform at elevation 9600 part 2

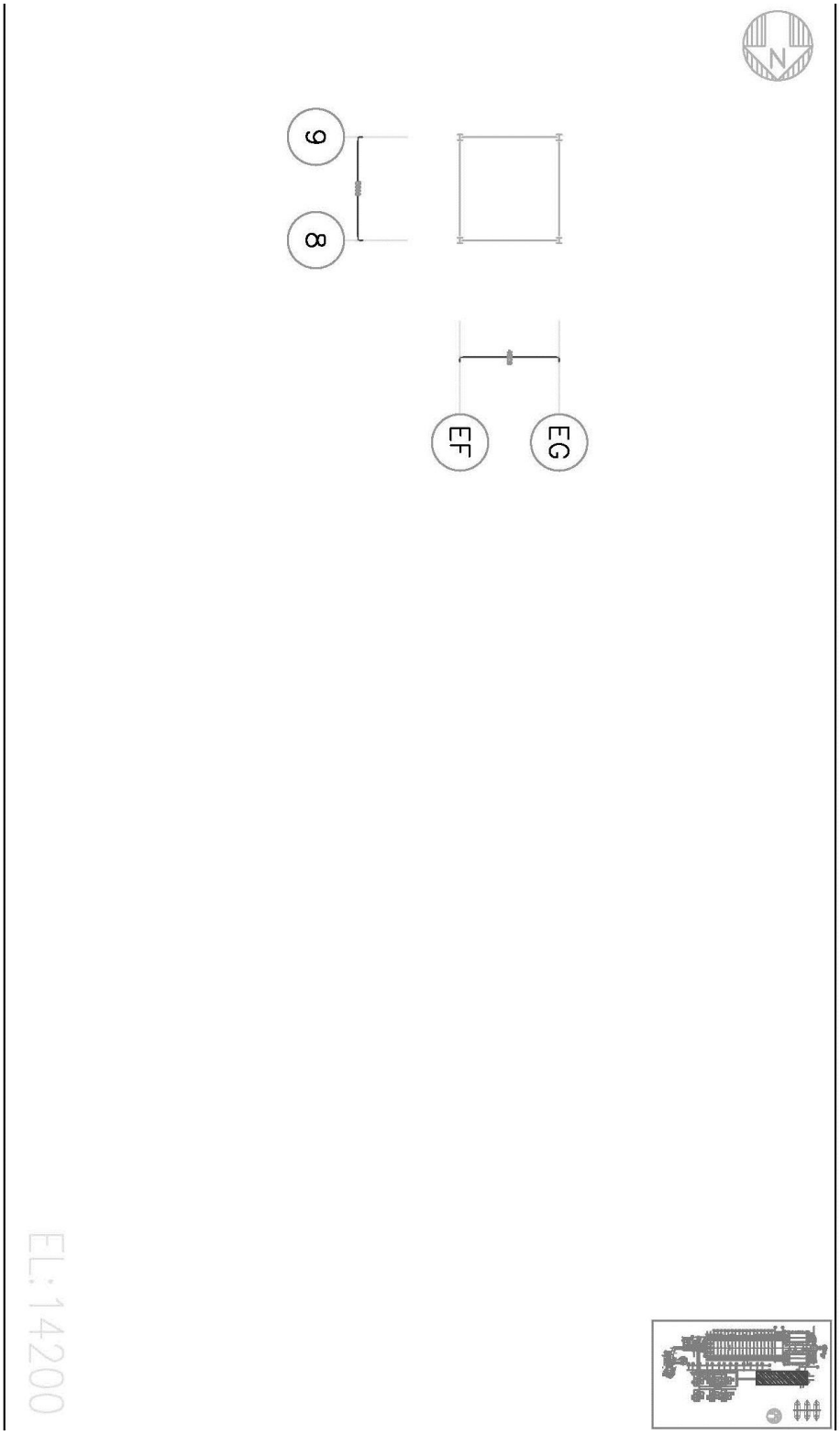

Figure 16: Platform at elevation 14200

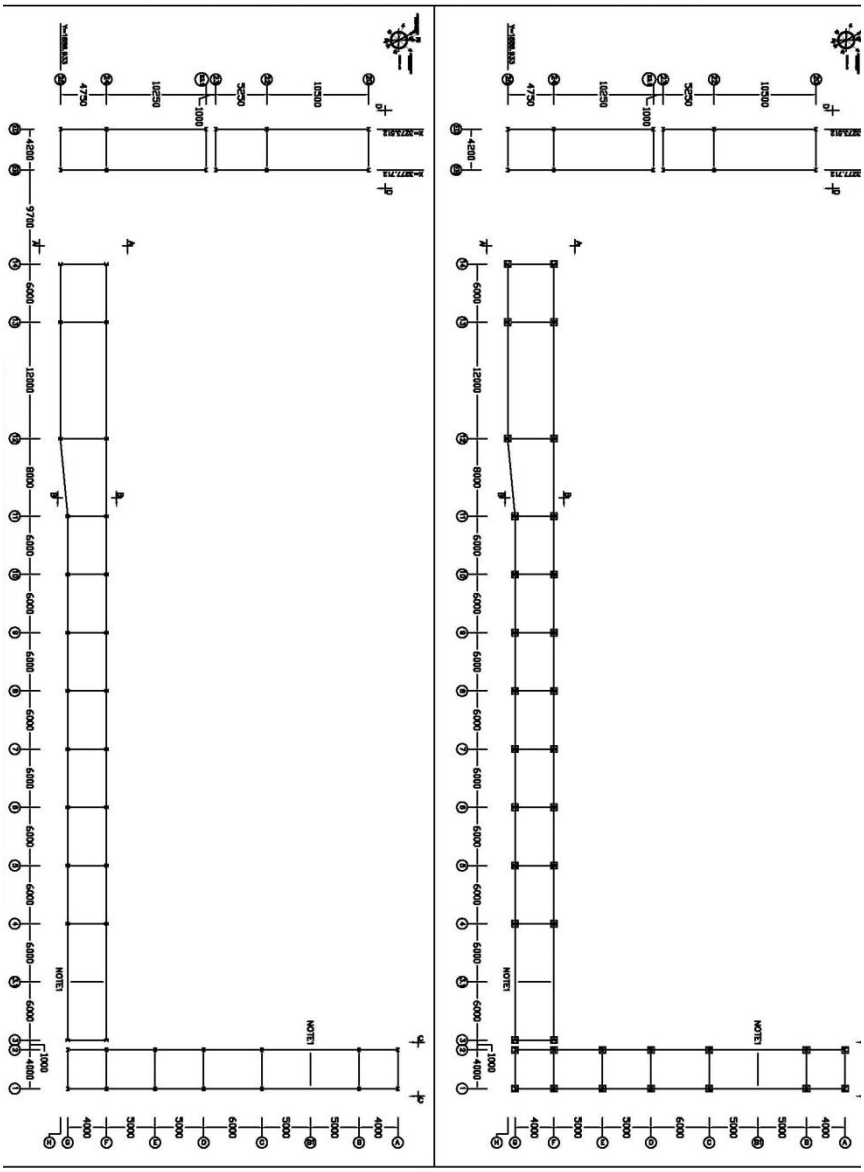

Figure 17: WTP pipe bridge plan

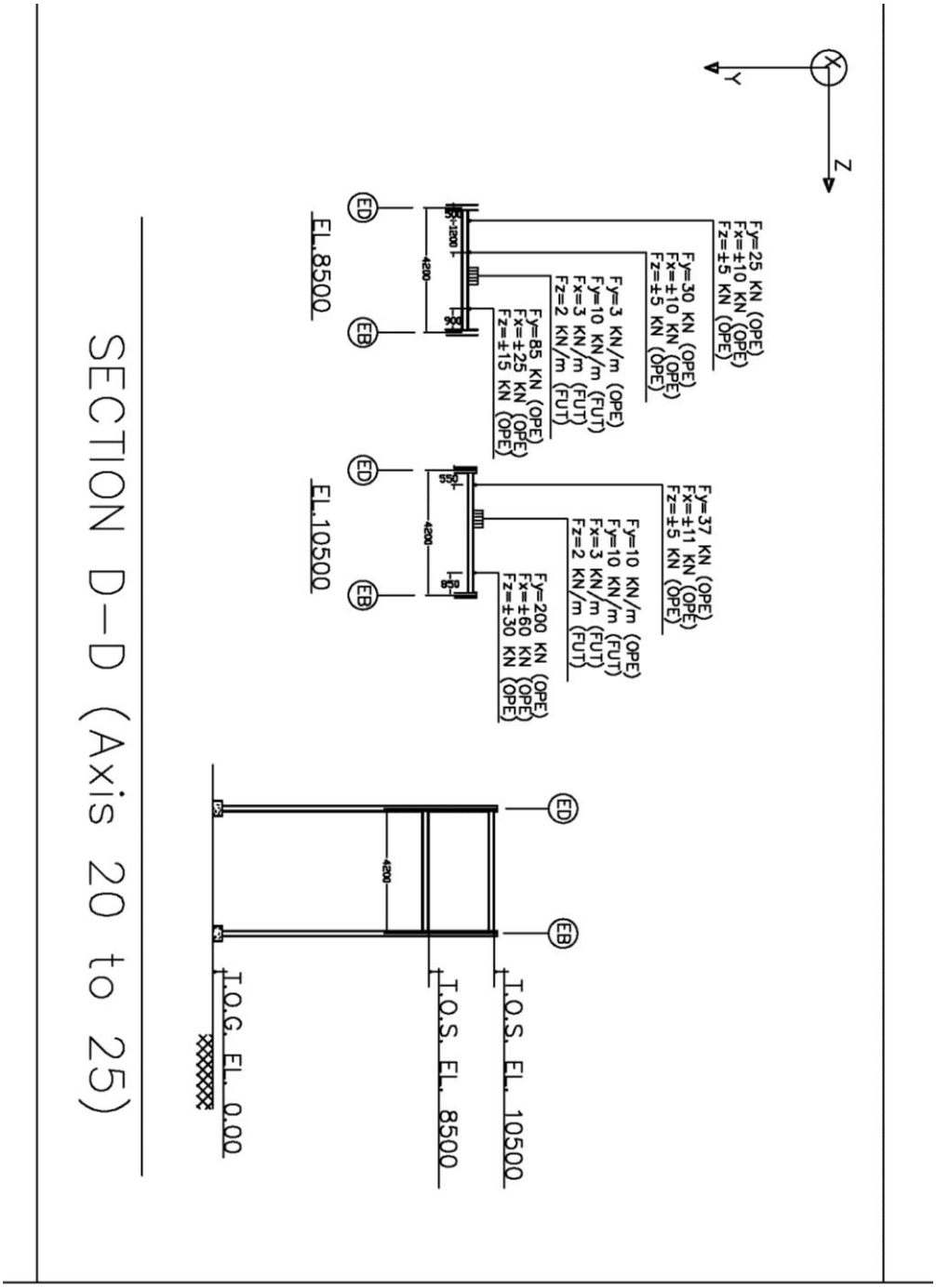

Figure 18: WTP pipe bridge section

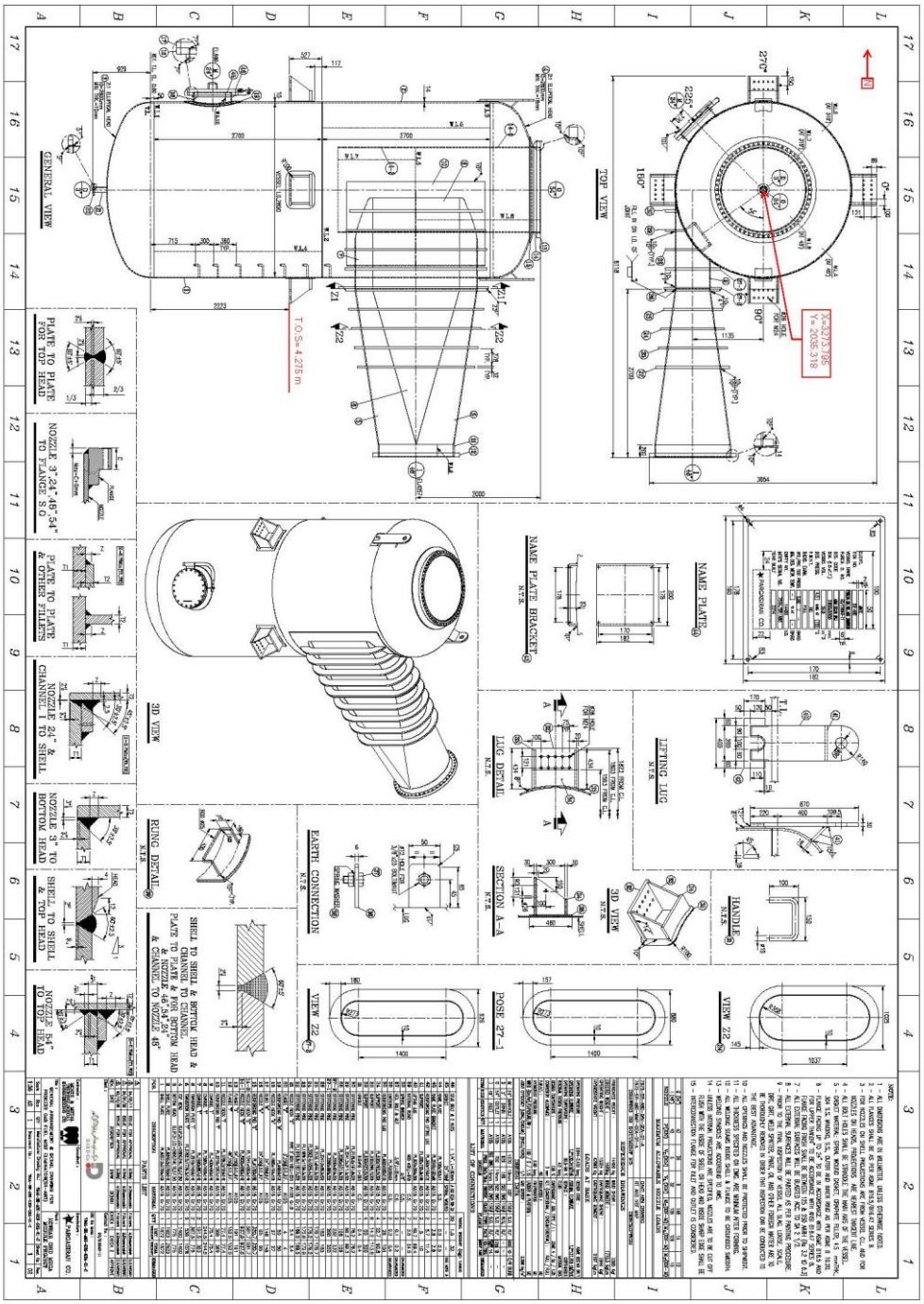

Figure 19: Mist eliminator general arrangement and detail drawings

APPENDIX B: CONNECTION

Typical connection calculation is available in appendix 2; see the attached file for more detail. Appendix B contains the following connection files:

- corner beam connection detail

This folder contains design sample for corner bracing connection

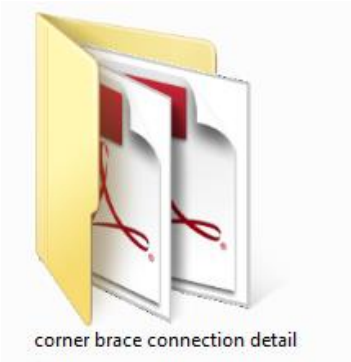

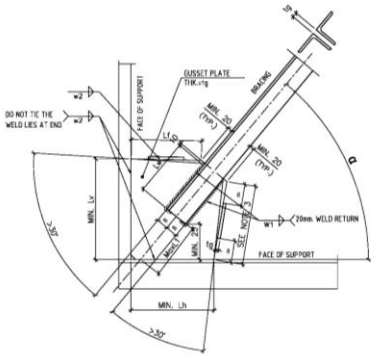

END DETAIL FOR TEE TYPE WELDE DOUBLE ANGLE

Sc: 1/10

TABLE 1– PARAMETERS FOR DOUBLE ANGLE DIAGONAL

DIAGONAL DESIGNATION	GUSSET PLATE		WELD		FREE LENGTH
	tg	Lw	W1	W2	L1
Name in Drawings	mm	mm	mm	mm	mm
2L 60x60x6	8	200	4	6	150
2L 80x80x8	10	200	6	8	150
2L 100X100x10	12	250	8	10	150
2L 120x120x12	15	300	10	12	150
2L 150x150x15	20	375	12	15	150

TABLE 2–GUSSET EDGE WELD LINE FOR FOR DOUBLE ANGLE

DIAGONAL DESIGNATION	Lv(ACCORDING TO DIAGONAL ANGLE (α))			
	20<α<30	30<α<45	45<α<60	60<α<70
2L 60x60x6	250	300	350	400
2L 80x80x8	300	350	450	450
2L 100X100x10	350	450	500	550
2L 120x120x12	450	500	550	600
2L 150x150x15	450	550	700	750

TABLE 3– FOR DOUBLE ANGLE BRACING

BRACING PROFILE	GUSSET PLATE	BOLT GROUP			FREE LENGTH
	tg	No.	SIZE	e	L1
Name in Drawings	mm	mm	mm	mm	mm
2L 60x60x6	8	4	M16	35	150
2L 80x80x8	10	6	M16	35	150
2L 100X100x10	12	6	M20	40	150
2L 120x120x12	15	6	M24	50	150
2L 150x150x15	20	9	M24	50	150

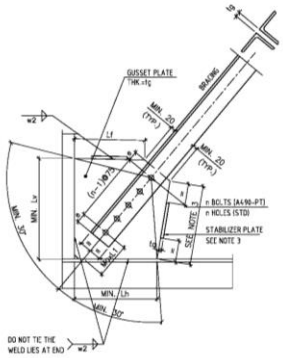

NOTES:

1–SHOP DRAWING PREPARATION ,FABRICATION AND ERECTION MUST BE COMPLIED WITH GENERAL NOTES FOR STEEL JOINTS

2–USE " α " COMPLEMENTARY ANGLE (90–α)FOR FINDING Lh IN TABLE 2.

3–IF L1>20tg, FREE EDGES OF GUSSET PLATE MUST BE STIFFENED BY MEANS OF STABILIZER PLATES AS SHOWN IN DETAILS.

- fix beam connection detail

This folder contains sample bolted endplate moment connection detail.

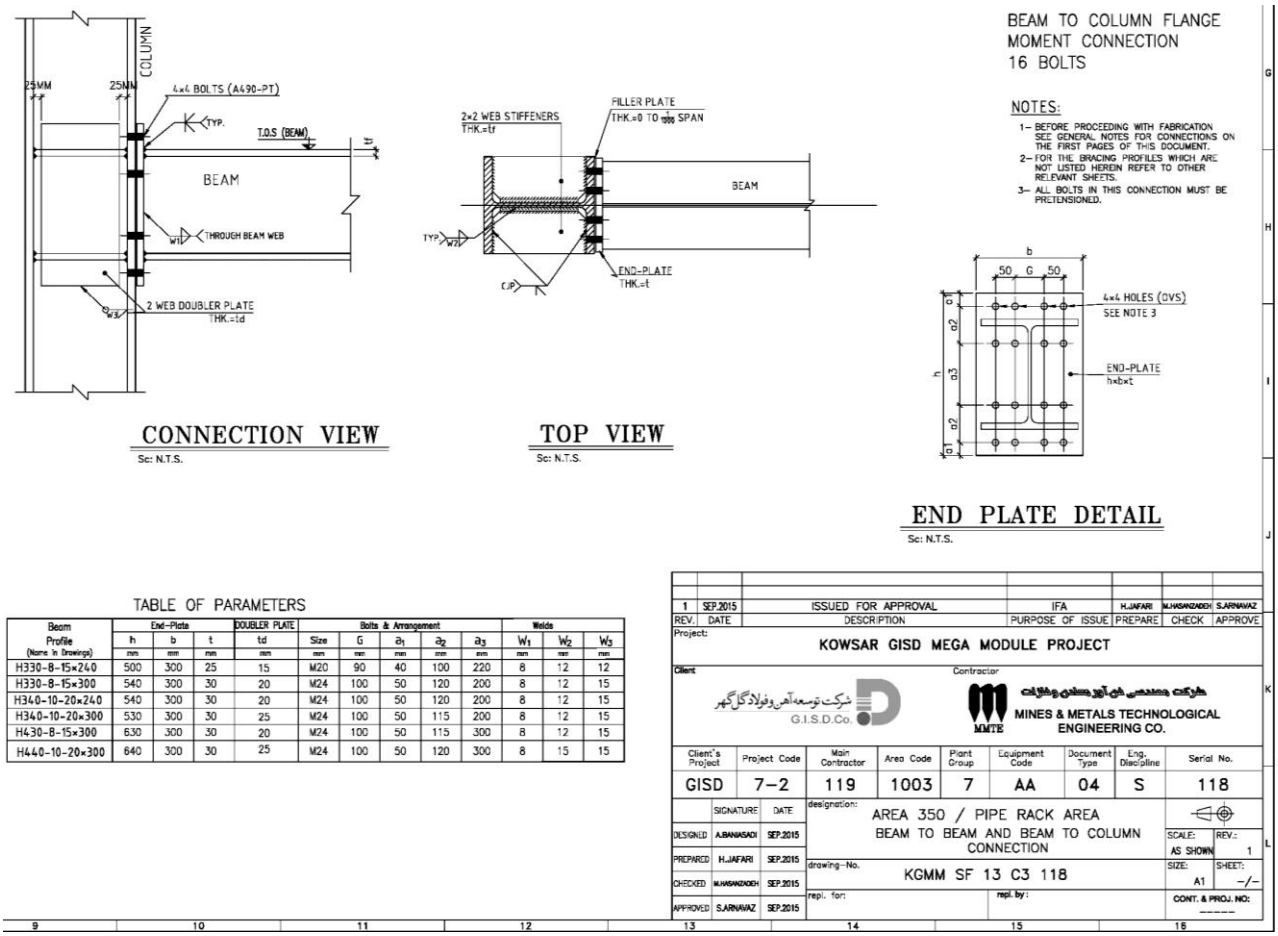

TABLE OF PARAMETERS

Beam Profile (Name in Drawings)	End-Plate h	b	t	DOUBLER PLATE td	Bolts & Arrangement Size	G	a_1	a_2	a_3	Welds W_1	W_2	W_3
	mm	mm	mm	mm	mm	mm	mm	mm	mm	mm	mm	mm
H330-8-15×240	500	300	25	15	M20	90	40	100	220	8	12	12
H330-8-15×300	540	300	30	20	M24	100	50	120	200	8	12	15
H340-10-20×240	540	300	30	20	M24	100	50	120	200	8	12	15
H340-10-20×300	530	300	30	25	M24	100	50	115	200	8	12	15
H430-8-15×300	630	300	30	20	M24	100	50	115	300	8	12	15
H440-10-20×300	640	300	30	25	M24	100	50	120	300	8	15	15

• horizontal bracing double element connection detail

Sample horizontal double element connection detail is calculated as below

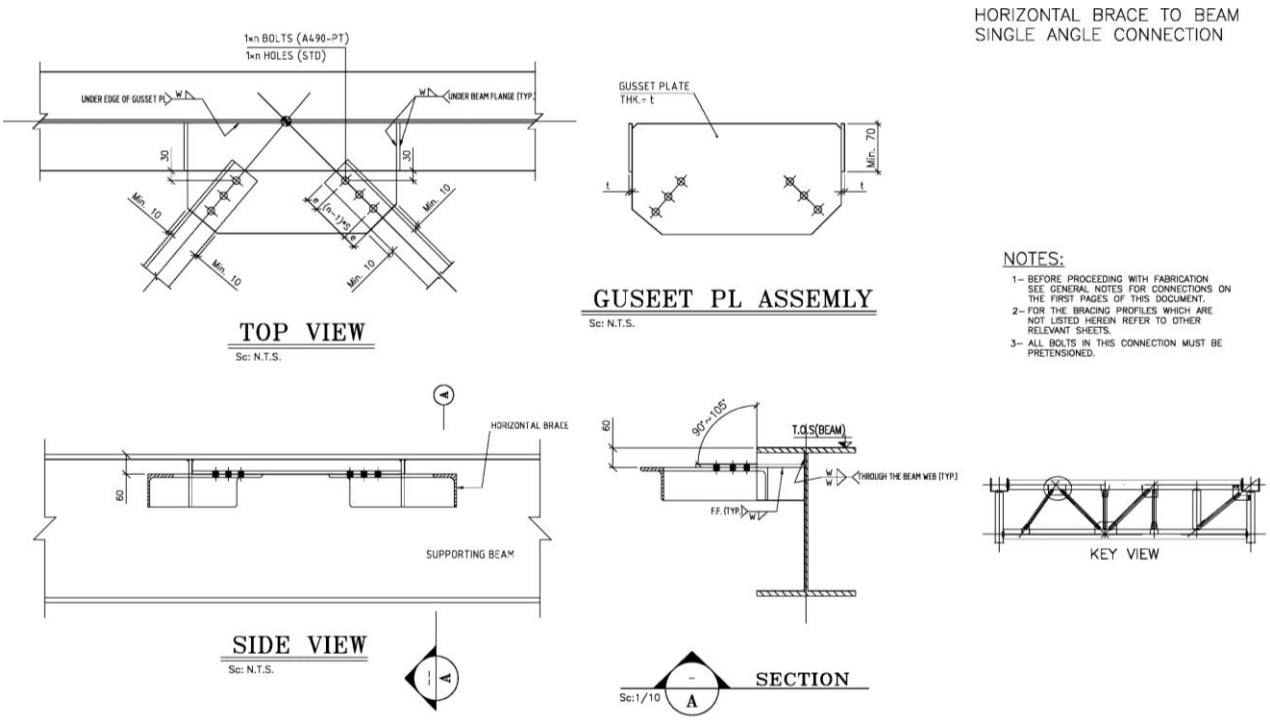

TABLE OF PARAMETERS

Horizontal Brace Profile	Bolts				Gusset Plate	
	n	Bolt Size	S	e	t**	W**
Name in Drawings	–	mm	mm	mm	mm	mm
L.60×6	3	M16	50	35	8	6
L.80×8	5	M16	50	35	8	8
L.100×10	5	M20	60	40	10	10
L.120×12	5	M24	75	50	12	11
L.150×15	7	M24	75	50	15	12

* See Note 3.

• shear key design

Sample design of shear key for B.p1 is as below

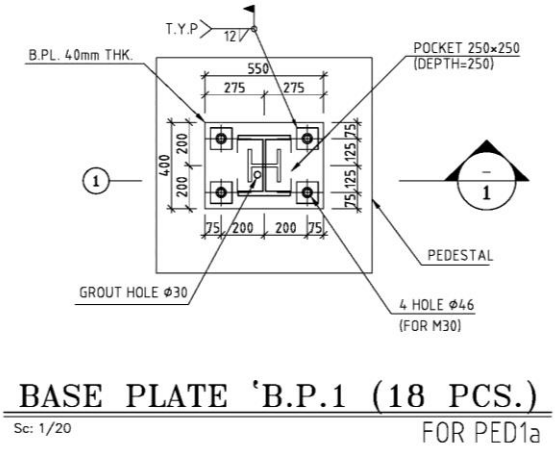

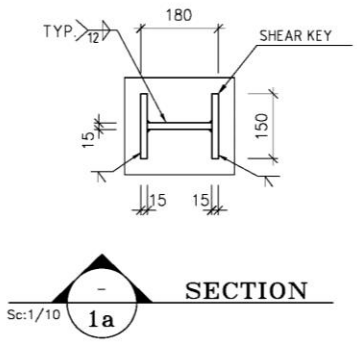

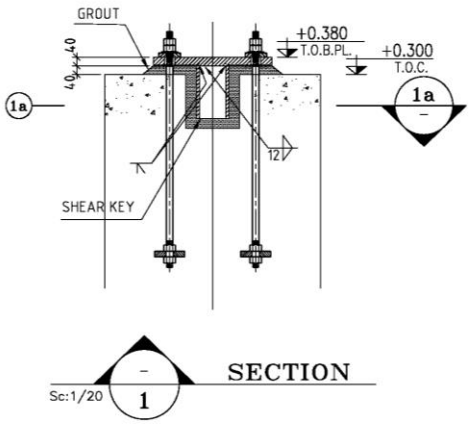

• vertical bracing and beam connection detail

Sample connection of simultaneous bolted beam with vertical bracing to the column connection is as below

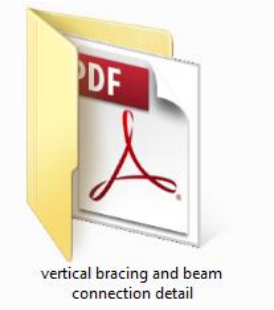

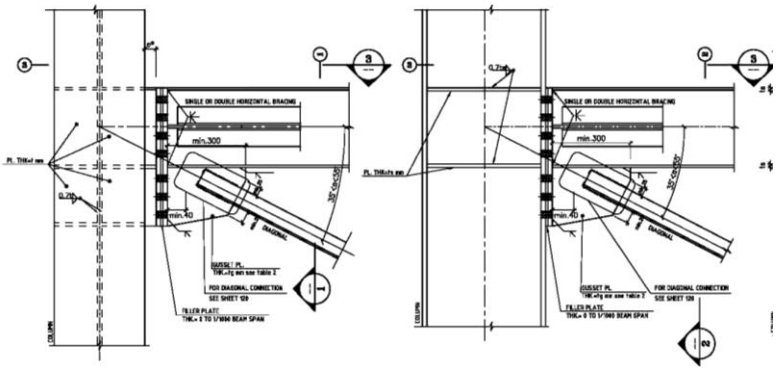

TRUSS TO COLUMN CONNECTION TYPE 1

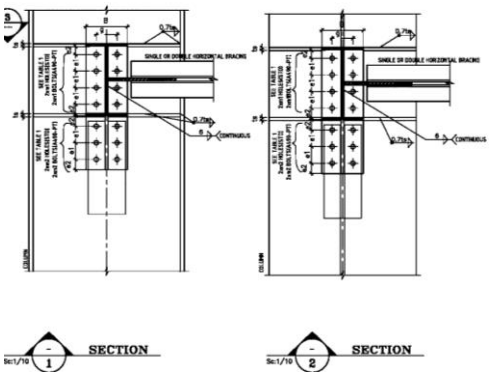

SECTION 1

SECTION 2

TABLE 1– PARAMETERS FOR VERTICAL BRACING TO COLUMN CONNECTION

BEAM PROFILE NAME IN DRAWINGS	DIAGONAL PROFILE NAME IN DRAWINGS	END PLATE b	END PLATE THICKNESS	BOLT ROWS FOR GUSSET VERTICAL EDGE CONNECTION: BOLT ROWS	BOLT ROWS(n2) FOR PARTS OF CONNECTION BETWEEN 30~40	BOLT SIZE	e1	e2	e3	s	WELD Da	STIFFENER PL. t	la
		mm	mm	(m1)	(n)	mm	mm	mm	mm	mm	mm	mm	mm
H340-12-20x300	2L-100x100x10 2L-80x80x8	300	30	2	5	30	90	60	130	120	6	12	25
H280-10-20x240	2L-100x100x10 2L-80x80x8	240	30	2	4	30	90	60	130	120	6	10	20
H224-8-12x200 H230-8-15x200	2L-120x120x12 2L-80x80x8 2L-80x80x8	220	30	2	5	27	90	60	130	110	6	8	15
IPE200 IPE220 IPE240	2L-120x120x12	200	25	2	5	24	90	50	130	100	6	8	15

TABLE 2–GUSSET PLATE CONNECTION PARAMETERS

DIAGONAL PROFILE	GUSSET PLATE tg	WELD w2
Name in Drawings	mm	mm
2L 80x80x8	10	8
2L 80x80x8 STAR	12	10
2L 100x100x10	15	12
2L 100x100x10 STAR	20	15
2L 120x120x12	20	15
2L 120x120x12 STAR		

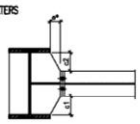

ECCENTERICITY e*

e* TABLE

C=MIN. (C1,C2)	e*
mm	mm
C≤50	75
50<C<75	50
C>75	0